YAMAHA

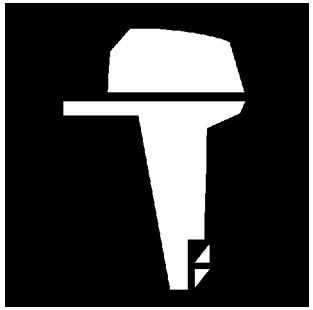

PARTS CATALOGUE

115TRB(6N62)
130TRB(6N72)
115CETO '03(6N62)
130BETO '03(6N72)
L130BETO'03(6N42)

YAMAHA GENUINE Parts & Accessories

2B6N4-100E1

A1

FOREWORD

This Parts Catalogue is related to the parts for the model(s) in the below frame. When you are ordering replacement parts, please refer to this Parts Catalogue and quote both part numbers and part names correctly.

115TRB(6N62), 130TRB(6N72),
115CETO'03(6N62), 130BETO'03(6N72), L130BETO'03(6N42)

1. Modifications or additions which have been made after issue of the Parts Catalogue will be announced in the Yamaha Parts News.
   It is advisable that you make necessary corrections to the Parts Catalogue according to the Yamaha Parts News.

2. Abbreviations
   The Following abbreviations are used in this Parts Catalogue.
   "UR" Use specified parts number.
   "UN" Use as many as needed.
   "AP" Alternate Parts
   "LM" Local Made
   (Parts need to be ordered locally)
   "O/S" Over Size
   "SWS" Salt Water Series

3. Parts, which are to be supplied in an assembly, are listed with a dot(.) in front of the part name as shown below.
   EXAMPLE
   CARBURETOR ASSY
   .JET, PILOT
   .NOZZLE, MAIN

4. Number of component for assembly
   The numeral appearing to the right of each component part indicates the quantity of parts for each assembly unit.
   EXAMPLE

PART NO.	DESCRIPTION	E	EH	EHT			REMARKS
6E0-85500-70	C.D.I. MAGNETO ASSY	1					
6E0-85550-70	.ROTOR ASSY	1					
6E0-15723-00-94	..PULLY, STARTER	1					

5. Quantity Column Information

NAME for Q'TY COLUMN	APPLICABLE MODEL
115	115TRB, 115CETO
130	130TRB, 130BETO
L130	L130BETO

6. Applicable Starting Serial No. and Color Code
   1) Engine Starting Serial No.

115TLRB	6E5	: 1000001	115CETO L/X	6E5	: 1000001
115TXRB	6E5	: 1000001	130BETO L/X	6L1	: 1000001
130TLRB	6L1	: 1000001	L130BETO X	6L6	: 1000001
130TXRB	6L1	: 1000001			

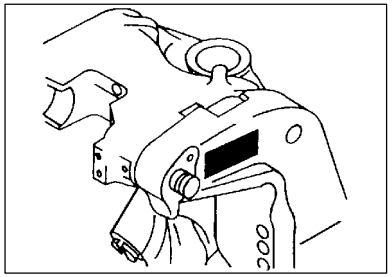

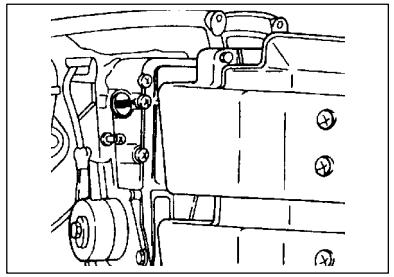

   2) Color Code

Color Code	Color Name	Abbreviation
004D	DARK BLUISH GRAY METALLIC 2	DBNM2

7. Note that the illustrations for reference in finding parts numbers, not to be used for assembling. When assembling, please use the applicable service manual.

8. The asterisk (*) before a reference number indicates modification items after the first edition.

CONTENTS

SHEET 1/2

TOP COWLING A4
CYLINDER. CRANKCASE 1 ..... A6
CRANKSHAFT. PISTON A7
CYLINDER. CRANKCASE 2 ..... B2
INTAKE B4
CARBURETOR B6
OIL PUMP C1
OIL TANK C3
FUEL 1 ..... C6
FUEL 2 ..... D1
FUEL 3 ..... D2
GENERATOR D3
ELECTRICAL 1 ..... D4
ELECTRICAL 2 ..... D5
STARTING MOTOR D7
BOTTOM COWLING E1
CONTROL E4
BRACKET 1 ..... E7
BRACKET 2 ..... F2
POWER TRIM & TILT ASSY 1 ..... F4
POWER TRIM & TILT ASSY 2 ..... F6

INDEX

NUMERICAL INDEX G1

SHEET 2/2

UPPER CASING A4*
LOWER CASING. DRIVE 1 ..... A6*
LOWER CASING. DRIVE 2 ..... B3*
LOWER CASING. DRIVE 3 ..... B5*
LOWER CASING. DRIVE 4 ..... C2*
FUEL TANK C3*
STEERING GUIDE ATTACHMENT 1 ..... C4*
STEERING GUIDE ATTACHMENT 2 ..... C5*
REMOTE CONTROL BOX C6*
REMOTE CONTROL ASSY 1 ..... C7*
REMOTE CONTROL ASSY 2 ..... D3*
METER D6*
SWITCH. PANEL E1*
REPAIR KIT 1 ..... E2*
REPAIR KIT 2 ..... E4*

INDEX

NUMERICAL INDEX G1*

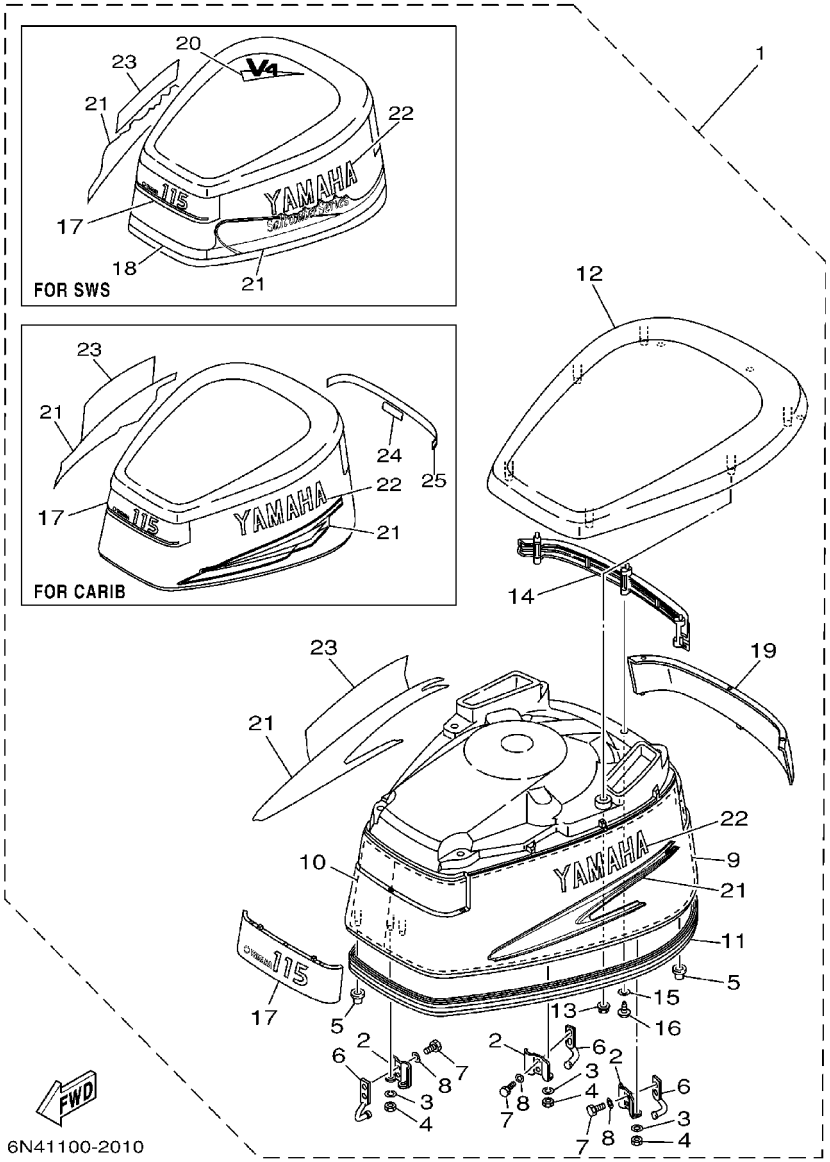

FIG. 1 TOP COWLING

REF. NO.	PART NO.	DESCRIPTION	115	130	L130			REMARKS
1	6N6–42610–80–4D	TOP COWLING ASSY	1					FOR USA,CANADA
	6N7–42610–80–4D	TOP COWLING ASSY		1				FOR USA,CANADA
	6N6–42610–60–4D	TOP COWLING ASSY	1					FOR CARIB
	6N7–42610–60–4D	TOP COWLING ASSY		1				FOR CARIB
	6N6–42610–T0–8D	TOP COWLING ASSY	1					FOR SWS
	6N7–42610–T0–4D	TOP COWLING ASSY		1	1			FOR SWS
2	6R3–42647–00	.HOLDER, CLAMP BAND	3	3	3			
3	92990–06100	.WASHER, SPRING	6	6	6			
4	95380–06600	.NUT, HEXAGON	6	6	6			
5	6R3–42662–00	.DAMPER	3	3	3			
6	6R3–42814–00	.HOOK, CLAMP	3	3	3			
7	97095–06012	.BOLT	6	6	6			
8	92995–06600	.WASHER	6	6	6			
9	6N7–42619–00	.DAMPER, FORM	1	1	1			
10	6N7–42627–00	.DAMPER, FORM	1	1	1			
11	6R3–42615–01	.SEAL	1	1	1			
12	6N7–42613–00–4D	.MOLDING, AIR DUCT	1	1	1			
13	90179–06M24	.NUT	6	6	6			
14	6N7–42636–00	.LOUVER 2	1	1	1			
15	92990–04600	.WASHER, PLATE	3	3	3			
16	97780–40520	.SCREW, TAPPING	3	3	3			
17	6N6–42686–60	.EMBLEM, FRONT	1					FOR USA,CANADA
	6N7–42686–60	.EMBLEM, FRONT		1				FOR USA,CANADA
	6N6–42686–40	.EMBLEM, FRONT	1					FOR CARIB,SWS
	6N7–42686–40	.EMBLEM, FRONT		1	1			FOR CARIB,SWS
18	6N6–42677–40	.GRAPHIC, FRONT	1	1	1			FOR SWS
19	6N6–42687–60	.EMBLEM, REAR	1					FOR USA,CANADA

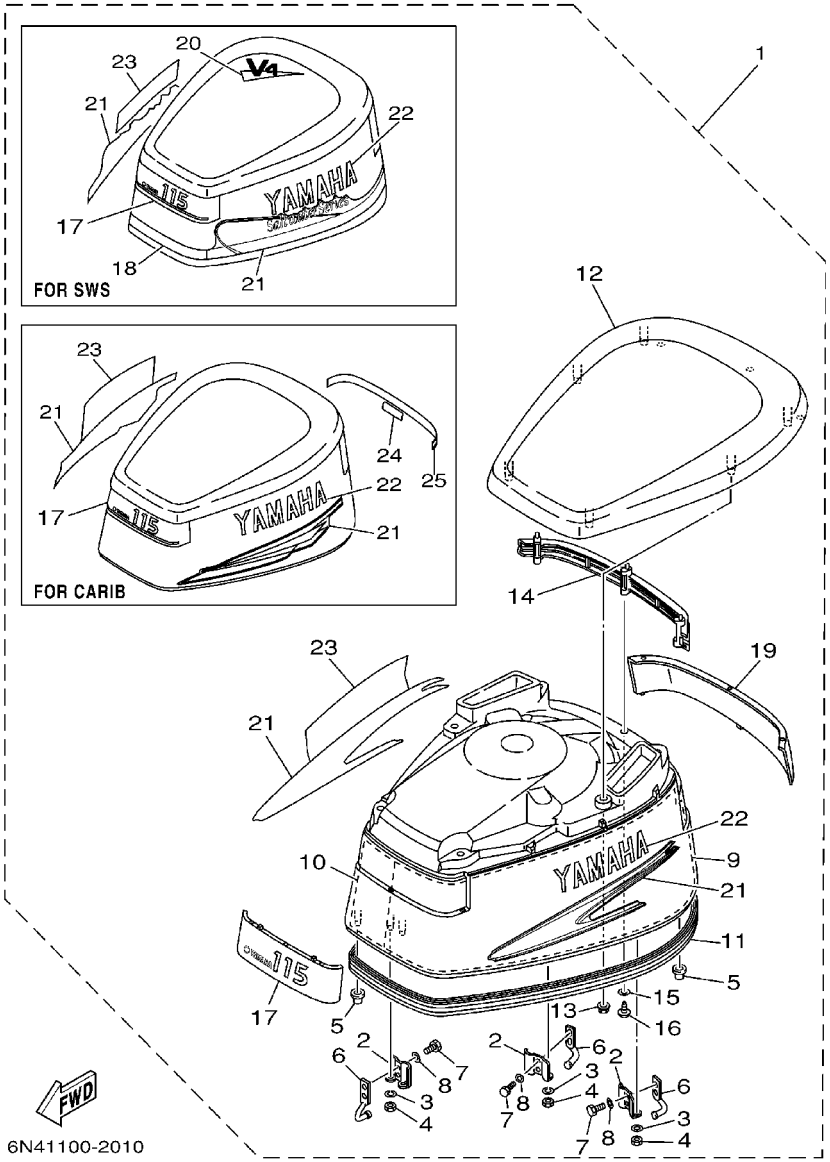

FIG. 1 TOP COWLING

REF. NO.	PART NO.	DESCRIPTION	115	130	L130			REMARKS
19	6N7–42687–60	.EMBLEM, REAR		1				FOR USA,CANADA
	6N6–42687–30	.EMBLEM, REAR	1					FOR CARIB,SWS
	6N7–42687–30	.EMBLEM, REAR		1	1			FOR CARIB,SWS
20	6N7–42683–40	.MARK, COWLING	1	1	1			FOR SWS
21	6N7–W0070–50	.GRAPHIC SET	1	1				FOR USA,CANADA
	6N7–W0070–30	.GRAPHIC SET	1	1				FOR CARIB
	6N7–W0070–S0	.GRAPHIC SET	1	1	1			FOR SWS
22	6N7–42681–50	.MARK, COWLING	1	1				FOR USA,CANADA
	6N7–42681–30	.MARK, COWLING	1	1				FOR CARIB
	6N6–42681–42	.MARK, COWLING	1	1	1			FOR SWS
23	6N7–42682–50	.MARK, COWLING	1	1				FOR USA,CANADA
	6N7–42682–30	.MARK, COWLING	1	1				FOR CARIB
	6N6–42682–42	.MARK, COWLING	1	1	1			FOR SWS
24	6N7–42678–30	.GRAPHIC, REAR	1	1				FOR CARIB
25	6N7–4267A–30	.GRAPHIC, REAR 2	1	1				FOR CARIB
	6N7–4267A–40	.GRAPHIC, REAR 2	1	1	1			FOR SWS

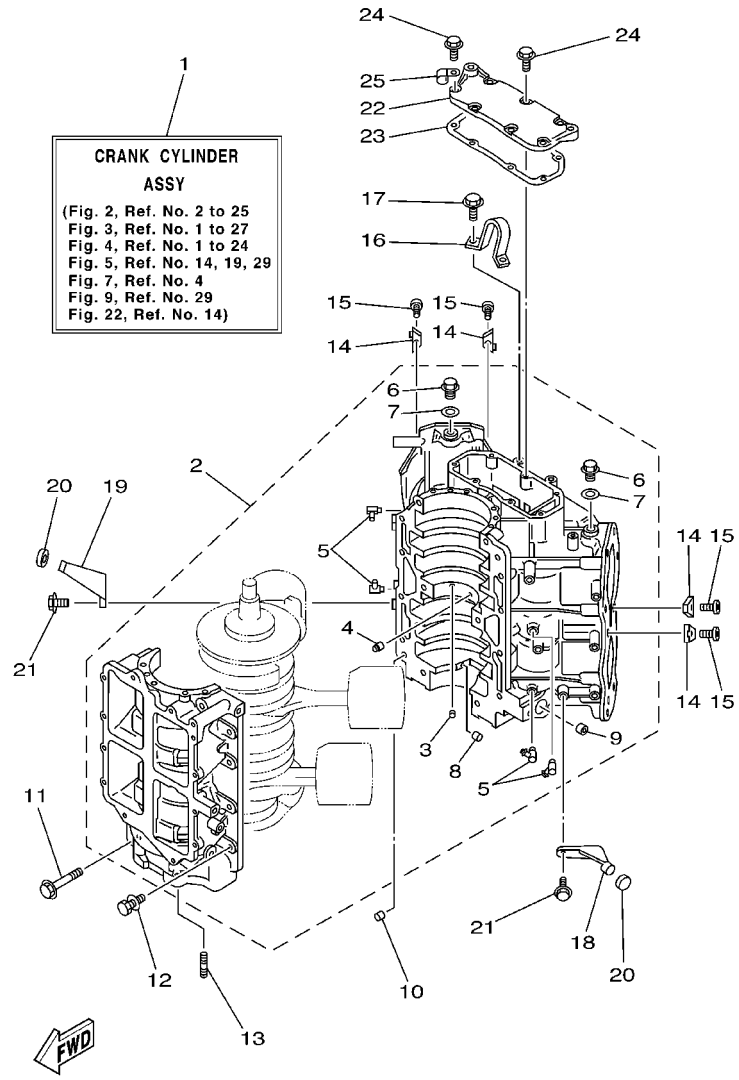

6N42100-3020

FIG. 2 CYLINDER. CRANKCASE 1

REF. NO.	PART NO.	DESCRIPTION	115	130	L130			REMARKS
1	6N6–W0090–16–1S	CRANK CYLINDER ASSY	1					
	6N7–W0090–17–1S	CRANK CYLINDER ASSY		1	1			
2	6N6–15100–01–1S	CRANKCASE ASSY	1					
	6N7–15100–01–1S	CRANKCASE ASSY		1	1			
3	624–11379–00	.VALVE, CHECK	1	1	1			
4	663–11518–01	.LOCK, BEARING	1	1	1			
5	6E5–11372–01	.NIPPLE, HOSE	4	4	4			
6	90340–14M00	.PLUG, STRAIGHT SCREW	2	2	2			
7	90430–14115	.GASKET	2	2	2			
8	90384–06M07	.BUSH, BIMETAL FORMED	1	1	1			
9	90384–14M09	.BUSH, BIMETAL FORMED	1	1	1			
10	93608–12063	PIN, DOWEL	2	2	2			
11	90105–10M20	BOLT, FLANGE	6	6	6			
12	90119–08M94	BOLT, WITH WASHER	8	8	8			
13	90116–08M45	BOLT, STUD	2	2	2			
14	6E5–11325–00	ANODE	4	4	4			
15	98780–04015	SCREW, FLAT HEAD	4	4	4			
16	6E5–11119–01	HANGER, ENGINE	1	1	1			
17	90119–08MA3	BOLT, WITH WASHER	2	2	2			
18	6E5–42761–00–1S	STOPPER	1	1	1			
19	6E5–42762–00–1S	STOPPER	1	1	1			
20	68F–44533–00	DAMPER, UPPER MOUNT RUBBER	2	2	2			
21	90119–06MA2	BOLT, WITH WASHER	4	4	4			
22	6K7–11371–01–1S	COVER	1	1	1			
23	6E5–11381–A2	GASKET 1	1	1	1			
24	90119–06MA2	BOLT, WITH WASHER	7	7	7			
25	90465–06M86	CLAMP	1	1	1			

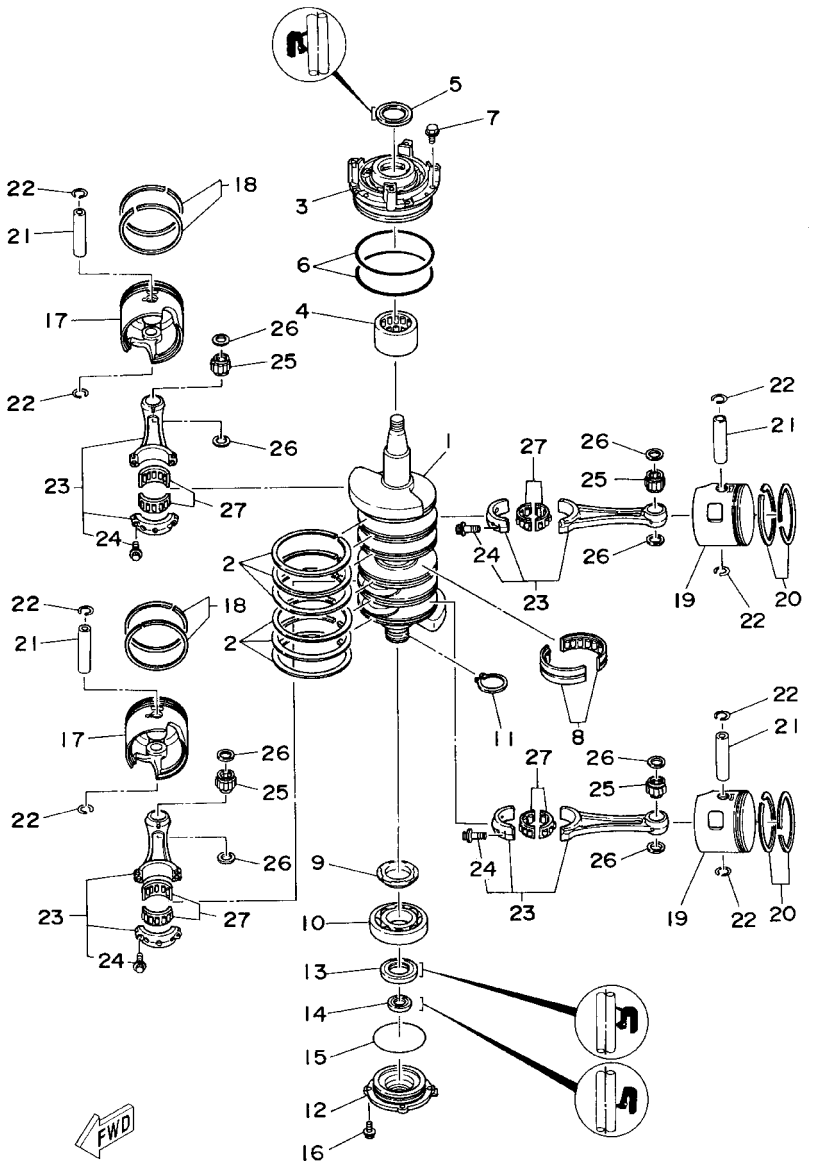

6N42100-4030

FIG. 3 CRANKSHAFT. PISTON

REF. NO.	PART NO.	DESCRIPTION	115	130	L130			REMARKS
1	6N7-11411-01	CRANKSHAFT	1	1	1			
2	6E5-11447-00	SEAL, CRANK	6	6	6			
3	6R3-15163-00-1S	HOUSING, BEARING 1	1	1	1			
4	93311-940U3	BALL BEARING	1	1	1			
5	93102-40M14	OIL SEAL	1	1	1			
6	93211-04001	O-RING	2	2	2			
7	90119-06MA2	BOLT, WITH WASHER	3	3	3			
8	93310-954U1	BEARING	1	1	1			
9	6R3-11536-00	GEAR, DRIVE	1	1	1			
10	93306-208U0	BEARING	1	1	1			
11	93410-40M03	CIRCLIP	1	1	1			
12	6G5-15359-00-94	HOUSING, OIL SEAL	1	1	1			
13	93102-35M13	OIL SEAL	1	1	1			
14	93101-22M15	OIL SEAL	1	1	1			
15	93210-74M35	O-RING	1	1	1			
16	90119-06MA2	BOLT, WITH WASHER	4	4	4			
17	6R5-11631-11-93	PISTON (STD)	2	2	2			
	6R5-11635-11	PISTON (0.25MM O/S)	2	2	2			AP
	6R5-11636-11	PISTON (0.50MM O/S)	2	2	2			AP
18	64D-11603-01	PISTON RING SET (STD)	2	2	2			
	64D-11604-01	PISTON RING SET (0.25MM O/S)	2	2	2			AP
	64D-11605-01	PISTON RING SET (0.50MM O/S)	2	2	2			AP
19	6R5-11642-11-93	PISTON 2 (STD)	2	2	2			
	6R5-11645-11	PISTON 2 (0.25MM O/S)	2	2	2			AP
	6R5-11646-11	PISTON 2 (0.50MM O/S)	2	2	2			AP
20	64D-11603-01	PISTON RING SET (STD)	2	2	2			
	64D-11604-01	PISTON RING SET (0.25MM O/S)	2	2	2			AP

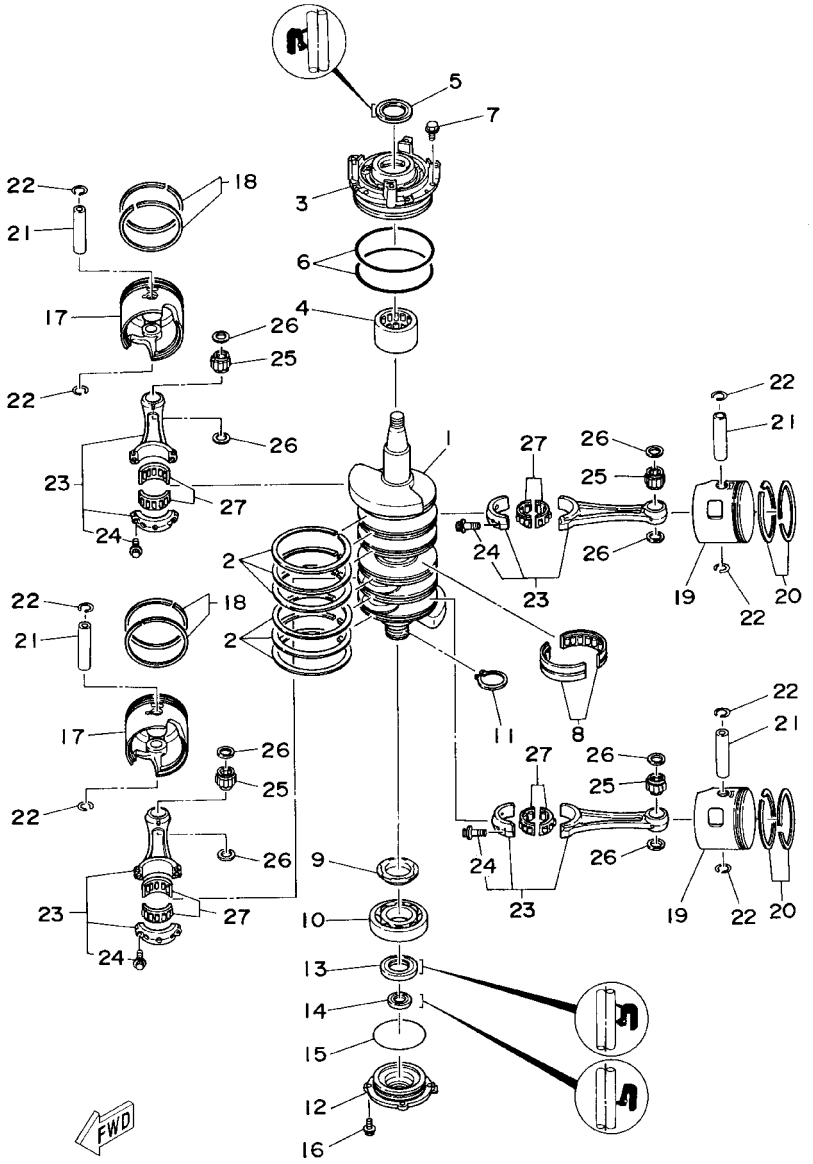

6N42100-4030

FIG. 3 CRANKSHAFT. PISTON

REF. NO.	PART NO.	DESCRIPTION	115	130	L130			REMARKS
20	64D–11605–01	PISTON RING SET (0.50MM O/S)	2	2	2			AP
21	6R5–11633–10	PIN, PISTON	4	4	4			
22	6R5–11634–10	CLIP, PISTON PIN	8	8	8			
23	6R5–11650–10	CONNECTING ROD ASSY	4	4	4			
24	90109–08022	.BOLT	2	2	2			
25	93310–323V6	BEARING	4	4	4			
26	90201–23M01	WASHER, PLATE	8	8	8			
27	93310–836U0	BEARING	4	4	4			

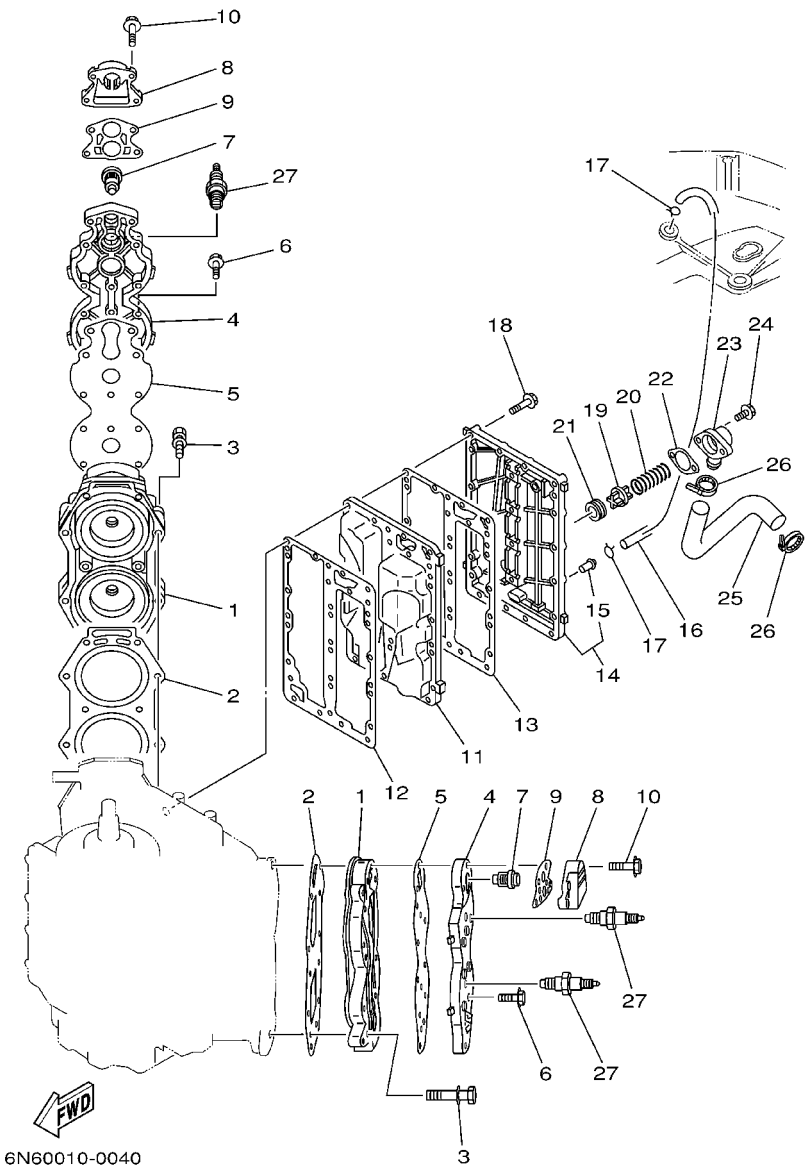

FIG. 4 CYLINDER. CRANKCASE 2

REF. NO.	PART NO.	DESCRIPTION	115	130	L130			REMARKS
1	6E5–11111–10–1S	HEAD, CYLINDER 1	2					
	6L1–11111–00–1S	HEAD, CYLINDER 1		2	2			
2	6E5–11181–A1	GASKET, CYLINDER HEAD 1	2	2	2			
3	90119–08MA8	BOLT, WITH WASHER	20	20	20			
4	6E5–11191–01–1S	COVER, CYLINDER HEAD 1	2	2	2			
5	6E5–11193–A0	GASKET, HEAD COVER 1	2	2	2			
6	90119–06MA4	BOLT, WITH WASHER	24	24	24			
7	6E5–12411–30	THERMOSTAT	2	2	2			
8	6G5–12413–00–1S	COVER, THERMOSTAT	2	2	2			
9	688–12414–A1	GASKET, COVER	2	2	2			
10	90119–06MA6	BOLT, WITH WASHER	8	8	8			
11	6E5–41111–00–1S	INNER COVER, EXHAUST	1					
	6L1–41111–00–1S	INNER COVER, EXHAUST		1	1			
12	6E5–41112–A1	GASKET, EXHAUST INNER COVER	1	1	1			
13	6E5–41112–A1	GASKET, EXHAUST INNER COVER	1	1	1			
14	6N7–41113–00–1S	OUTER COVER, EXHAUST	1	1	1			
15	650–24378–00	.PIPE, JOINT 4	1	1	1			
16	6E5–24312–00	PIPE 2	1	1	1			
17	90467–08004	CLIP	2	2	2			
18	90119–06MA5	BOLT, WITH WASHER	23	23	23			
19	6G5–12416–00	VALVE, PRESSURE CONTROL	1	1	1			
20	90501–16M11	SPRING, COMPRESSION	1	1	1			
21	90480–20M05	GROMMET	1	1	1			
22	6G5–11382–A1	GASKET 2	1	1	1			
23	6G5–11372–00–1S	COVER, BYPASS 2	1	1	1			
24	90119–06MA2	BOLT, WITH WASHER	2	2	2			
25	6E5–12576–00	HOSE 1	1	1	1			

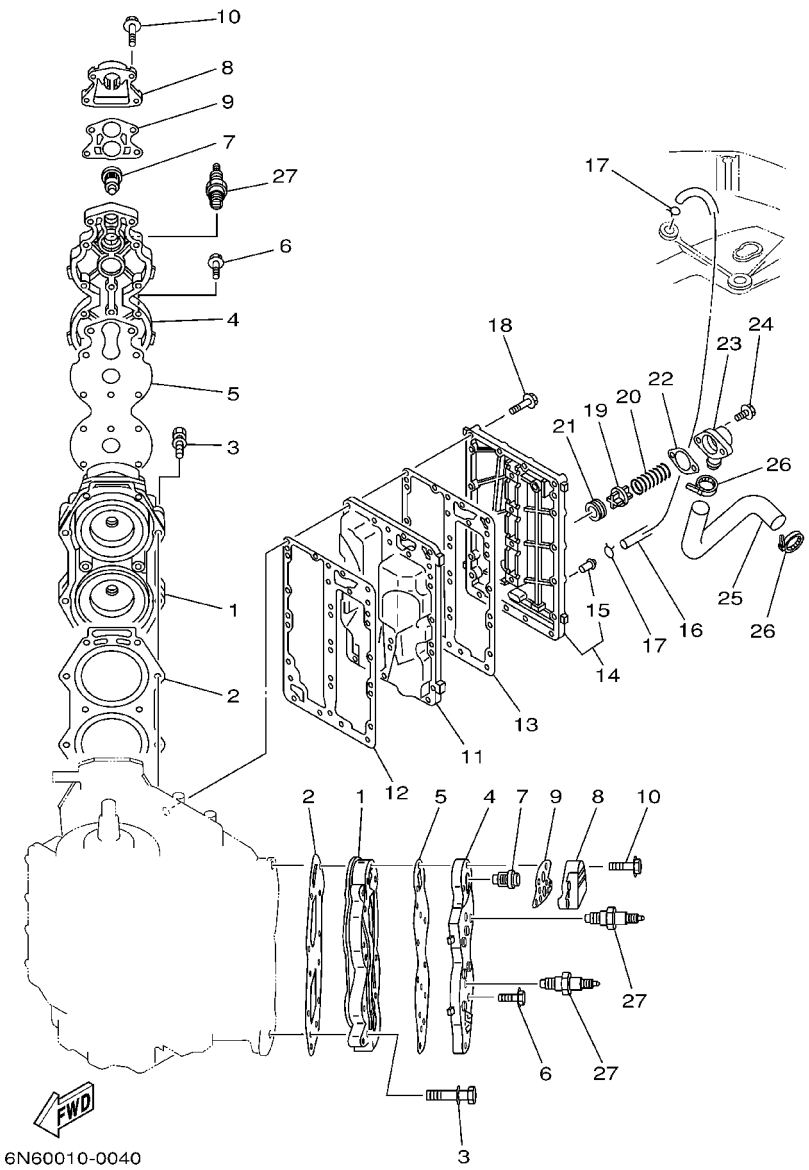

FIG. 4 CYLINDER. CRANKCASE 2

REF. NO.	PART NO.	DESCRIPTION	115	130	L130			REMARKS
26	90465–13M18	CLAMP	2	2	2			
27	94702–00247	PLUG, SPARK (NGK BR8HS 10)	4					
	94702–00309	PLUG, SPARK (NGK BR9HS 10)		4	4			

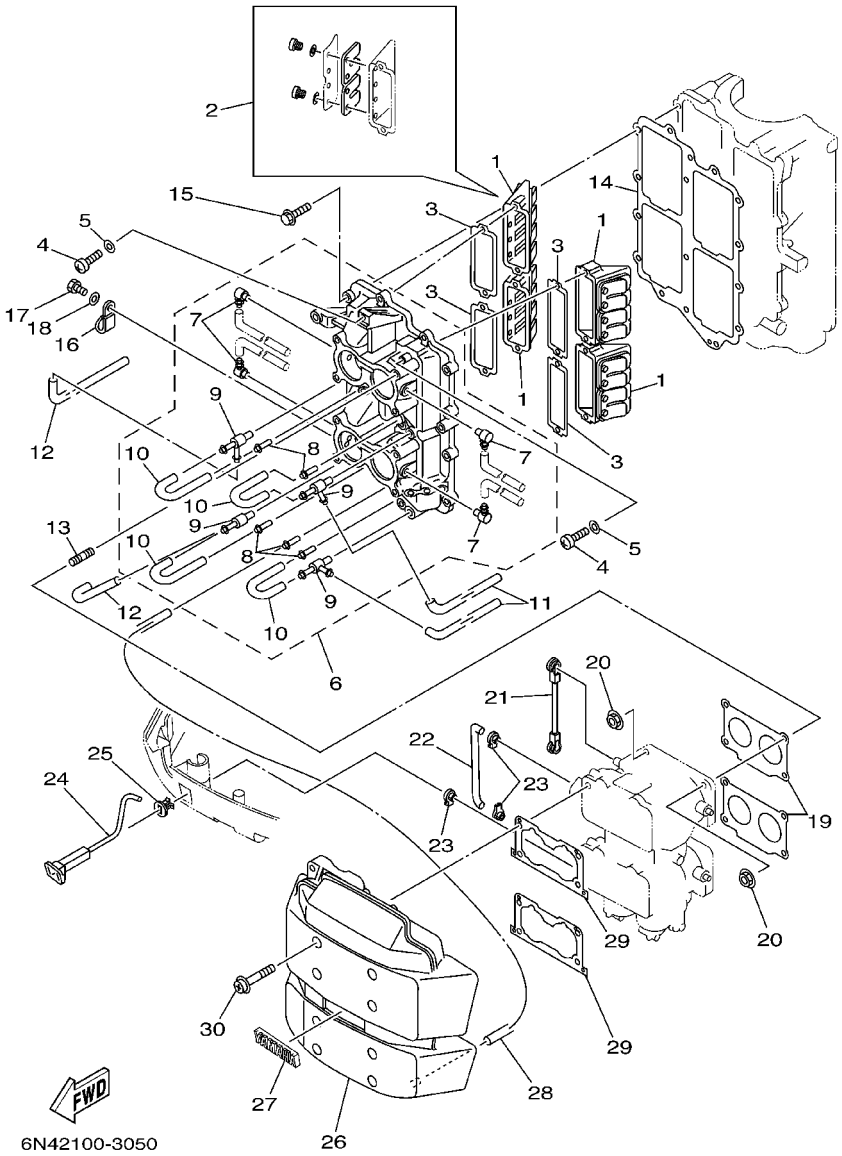

FIG. 5 INTAKE

REF. NO.	PART NO.	DESCRIPTION	115	130	L130			REMARKS
1	6E5–13610–00	REED VALVE ASSY	4	4	4			
2	6E5–W0004–00	.REED SET	1	1	1			
3	6E5–13621–A1	GASKET, VALVE SEAT	4	4	4			
4	97880–05025	SCREW, PAN HEAD	8	8	8			
5	92990–05600	WASHER, PLATE	8	8	8			
6	6E5–13641–11–1S	MANIFOLD 1	1	1	1			
7	6E5–13552–00	.NOZZLE	4	4	4			
8	624–14485–00	.PIPE, JOINT	5	5	5			
9	6E5–11370–01	.CHECK VALVE ASSY	4	4	4			
10	90445–07M28	.HOSE (L70)	4	4	4			
11	90445–07M24	HOSE (L240)	2	2	2			
12	90445–07M46	HOSE (L360)	2	2	2			
13	90116–06M30	BOLT, STUD	8	8	8			
14	6E5–13645–A1	GASKET, MANIFOLD 1	1	1	1			
15	90119–06MA3	BOLT, WITH WASHER	12	12	12			
16	90465–06M86	CLAMP	1	1	1			
17	97095–06012	BOLT	1	1	1			
18	92995–06600	WASHER	1	1	1			
19	6E5–14198–A2	GASKET	2	2	2			
20	90179–06M28	NUT	8	8	8			
21	6E5–41217–01	ROD, ACCEL. LEVER	1	1	1			
22	6E5–41256–01	ROD, CHOKE 1	1	1	1			
23	661–41262–02	JOINT, CHOKE LEVER	3	3	3			
24	6N7–41271–00	KNOB, CHOKE	1	1	1			
25	689–41273–00	GROMMET	1	1	1			
26	6N7–14440–01	SILENCER ASSY, INTAKE	1	1	1			
27	6E5–1441K–00	EMBLEM	1	1	1			

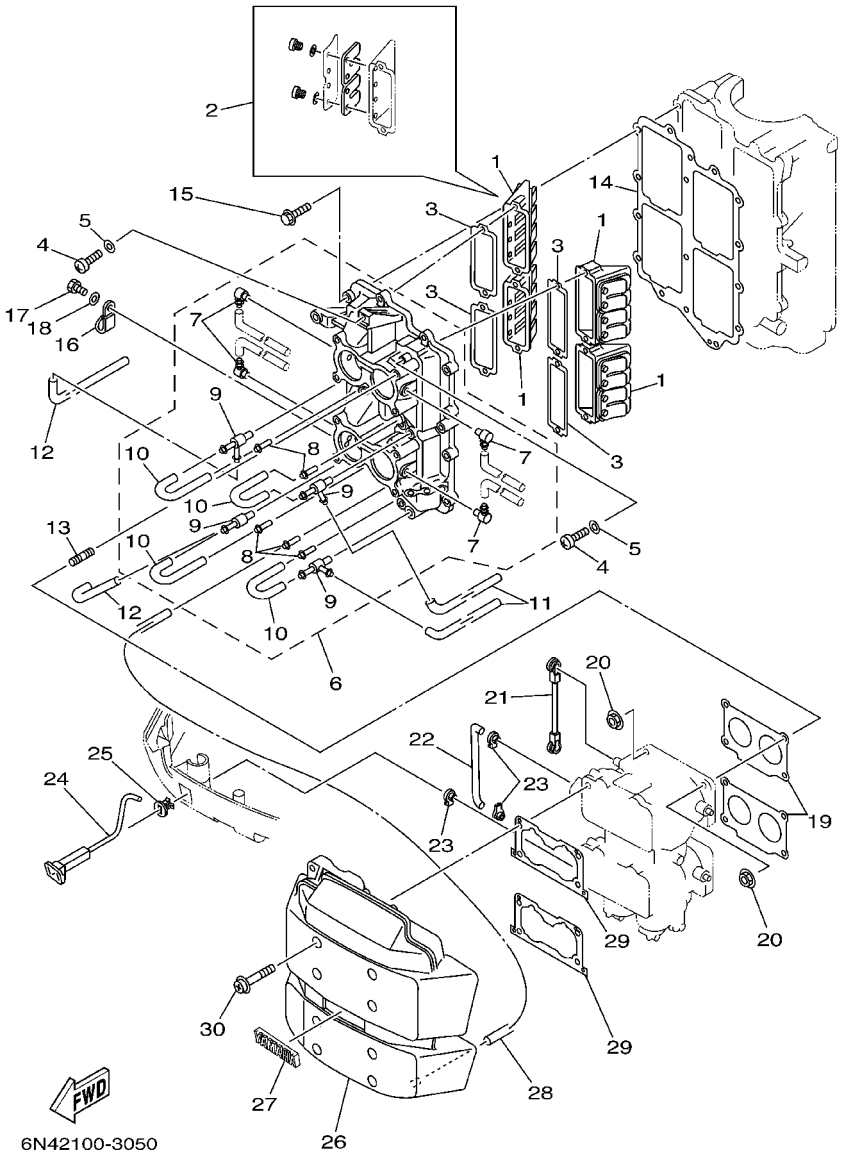

FIG. 5 INTAKE

REF. NO.	PART NO.	DESCRIPTION	115	130	L130			REMARKS
28	90445–07258	HOSE (L200)	1	1	1			
29	6K7–14483–00	GASKET	2	2	2			
30	90159–06M14	SCREW, WITH WASHER	8	8	8			

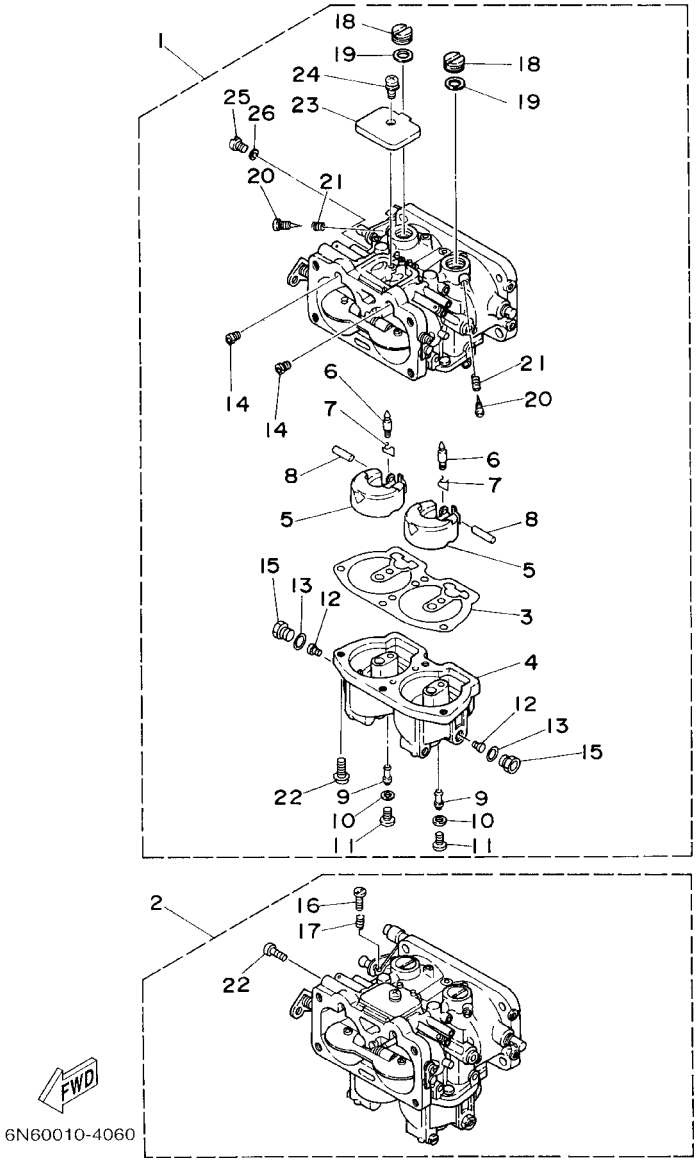

FIG. 6 CARBURETOR

REF. NO.	PART NO.	DESCRIPTION	115	130	L130			REMARKS
1	6E5-14301-16	CARBURETOR ASSY 1	1					
	6L1-14301-04	CARBURETOR ASSY 1		1	1			
2	6E5-14302-16	CARBURETOR ASSY 2	1					
	6L1-14302-04	CARBURETOR ASSY 2		1	1			
3	64D-14384-01	.GASKET, FLOAT CHAMBER	2	2	2			
4	64D-14381-00	.BODY, FLOAT CHAMBER	2	2	2			
5	6E5-14385-02	.FLOAT	4	4	4			
6	6E5-14546-00	.VALVE, NEEDLE	4	4	4			
7	6E5-14159-00	.CLIP	4	4	4			
8	6E5-14386-02	.PIN, FLOAT	4	4	4			
9	64D-1492F-39	.JET, AIR SLOW (#78)	4					
	64D-1492F-41	.JET, AIR SLOW (#82)		4	4			
10	61U-14959-00	.GASKET	4	4	4			
11	64D-14394-00	.VALVE, DRAIN	4	4	4			
12	64D-1492E-88	.JET, MAIN (#176)	4					
	64D-1492E-90	.JET, MAIN (#180)		4	4			
13	6E5-14398-00	.GASKET	4	4	4			
14	61A-1492H-12	.JET, SLOW AIR BLEED (#60)	4	4	4			
15	61A-14383-01	.SCREW, DRAIN	4	4	4			
16	6E5-14321-00	.SCREW, THROTTLE	1	1	1			#2
17	6J8-14334-00	.SPRING, THROTTLE	1	1	1			#2
18	6E5-14328-01	.PLUG	4	4	4			
19	6E5-14979-00	.GASKET	4	4	4			
20	6E5-14323-03	.SCREW, AIR ADJUSTING	4	4	4			
21	6E5-14223-00	.SPRING, AIR ADJUSTING	4	4	4			
22	97980-05116	.SCREW, WITH WASHER	9	9	9			
23	6E5-14527-01	.PLATE	2	2	2			

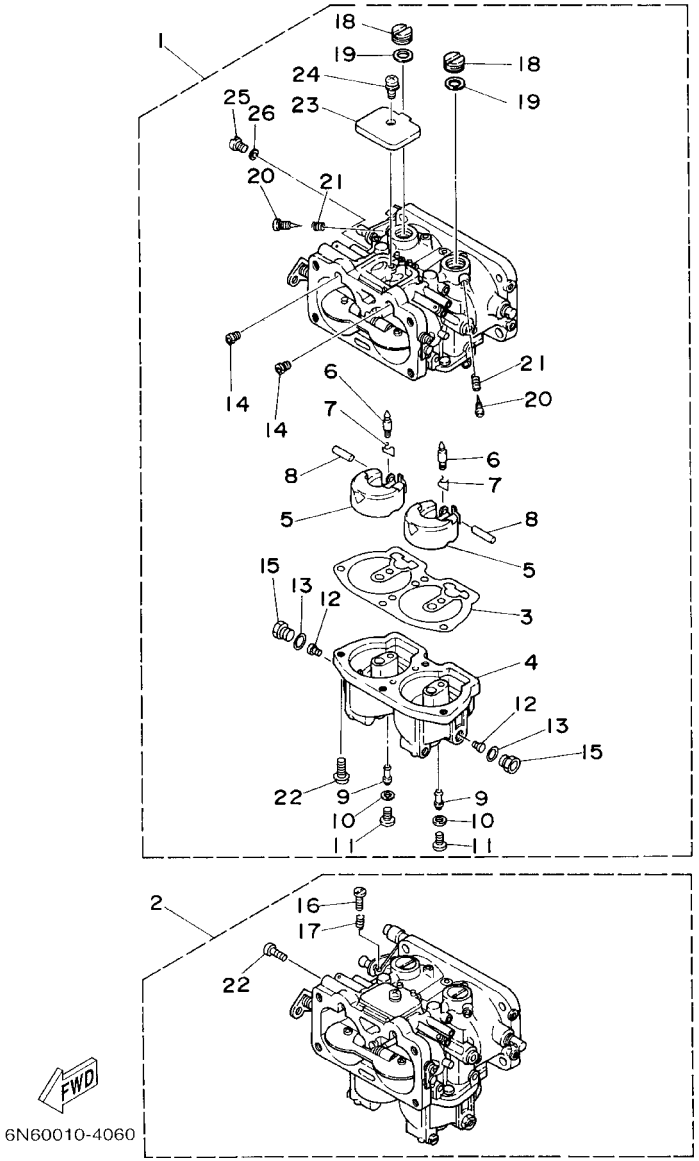

FIG. 6 CARBURETOR

REF. NO.	PART NO.	DESCRIPTION	115	130	L130			REMARKS
24	97980–05108	.SCREW, WITH WASHER	2	2	2			
25	6E5–14324–00	.SCREW, FLAT HEAD	2	2	2			
26	6J8–14959–00	.GASKET	2	2	2			

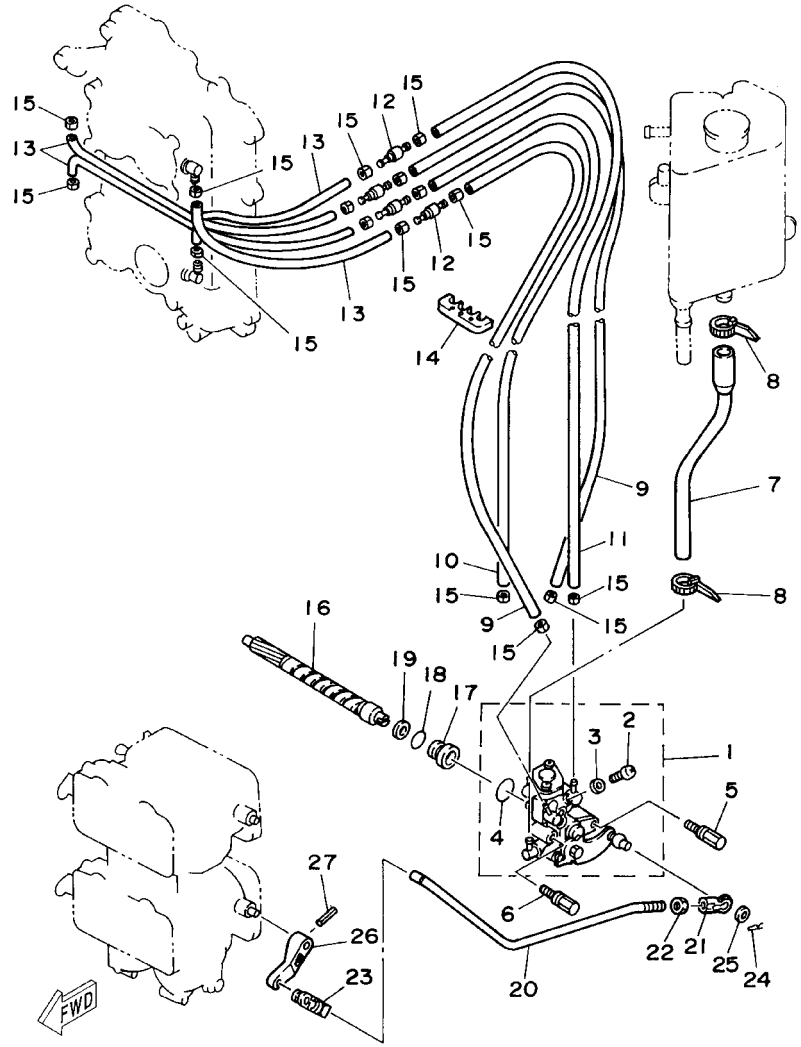

FIG. 7 OIL PUMP

REF. NO.	PART NO.	DESCRIPTION	115	130	L130			REMARKS
1	6N6–13200–00	OIL INJECTION PUMP ASSY	1					
	6N7–13200–00	OIL INJECTION PUMP ASSY		1	1			
2	6R3–13471–00	.PLUG, DRAIN	1	1	1			
3	6L2–13475–00	.GASKET	1	1	1			
4	93210–19MA7	.O–RING	1	1	1			
5	90109–06M40	BOLT	1	1	1			
6	90109–06M39	BOLT	1	1	1			
7	6N7–13416–00	PIPE, OIL 1	1	1	1			
8	90465–11M10	CLAMP	2	2	2			
9	90445–07M89	HOSE (L310)	2	2	2			
10	90445–07196	HOSE (L160)	1	1	1			
11	90445–07M72	HOSE (L250)	1	1	1			
12	6R3–13183–10	VALVE, CHECK	4	4	4			
13	90445–07M87	HOSE (L110)	4	4	4			
14	90464–07M06	CLAMP	1	1	1			
15	90468–07M02	CLIP	16	16	16			
16	6R3–11537–00	GEAR, DRIVEN	1	1	1			
17	6R3–13117–00	COLLAR, DISTANCE	1	1	1			
18	93210–13M04	O–RING	1	1	1			
19	90202–08M44	WASHER, PLATE	1	1	1			
20	6R3–41241–00	ROD, LINK	1	1	1			
21	6H1–41237–00	JOINT, LINK	1	1	1			
22	95380–05600	NUT	1	1	1			
23	6R5–41237–00	JOINT, LINK	1	1	1			
24	90468–05M03	CLIP	1	1	1			
25	90202–05088	WASHER, PLATE	1	1	1			
26	6E5–14276–01	LEVER	1	1	1			

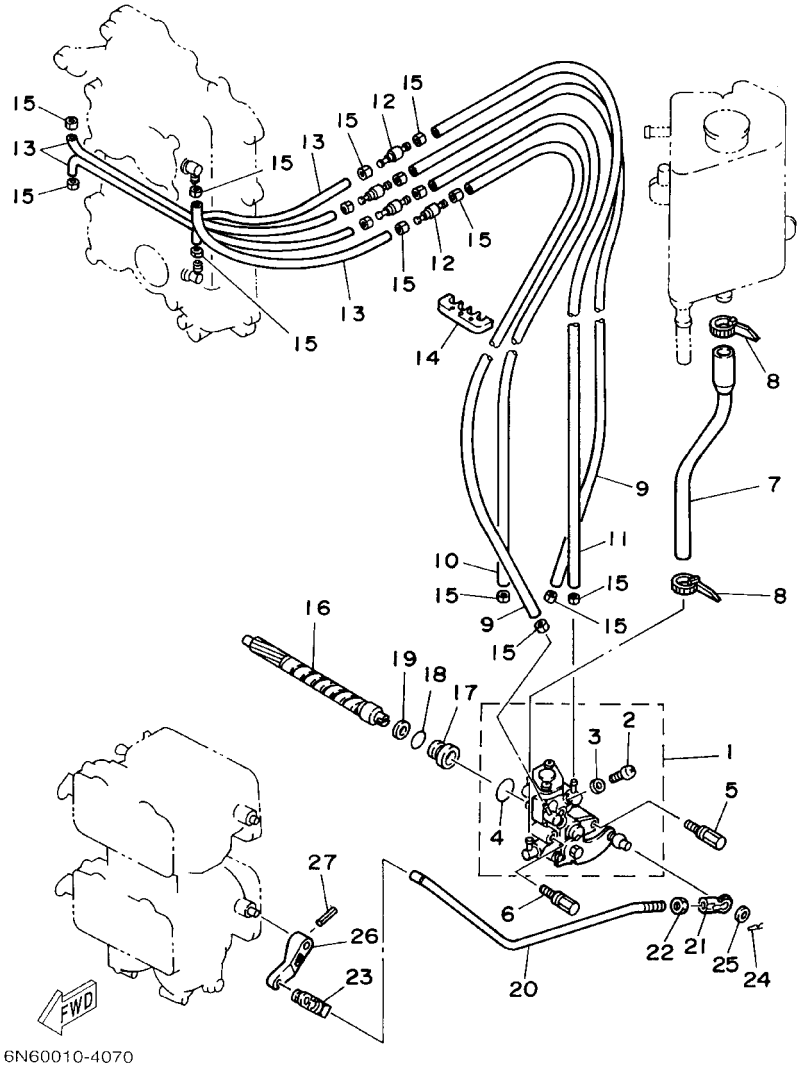

FIG. 7 OIL PUMP

REF. NO.	PART NO.	DESCRIPTION	115	130	L130			REMARKS
27	91690–30016	PIN, SPRING	1	1	1			

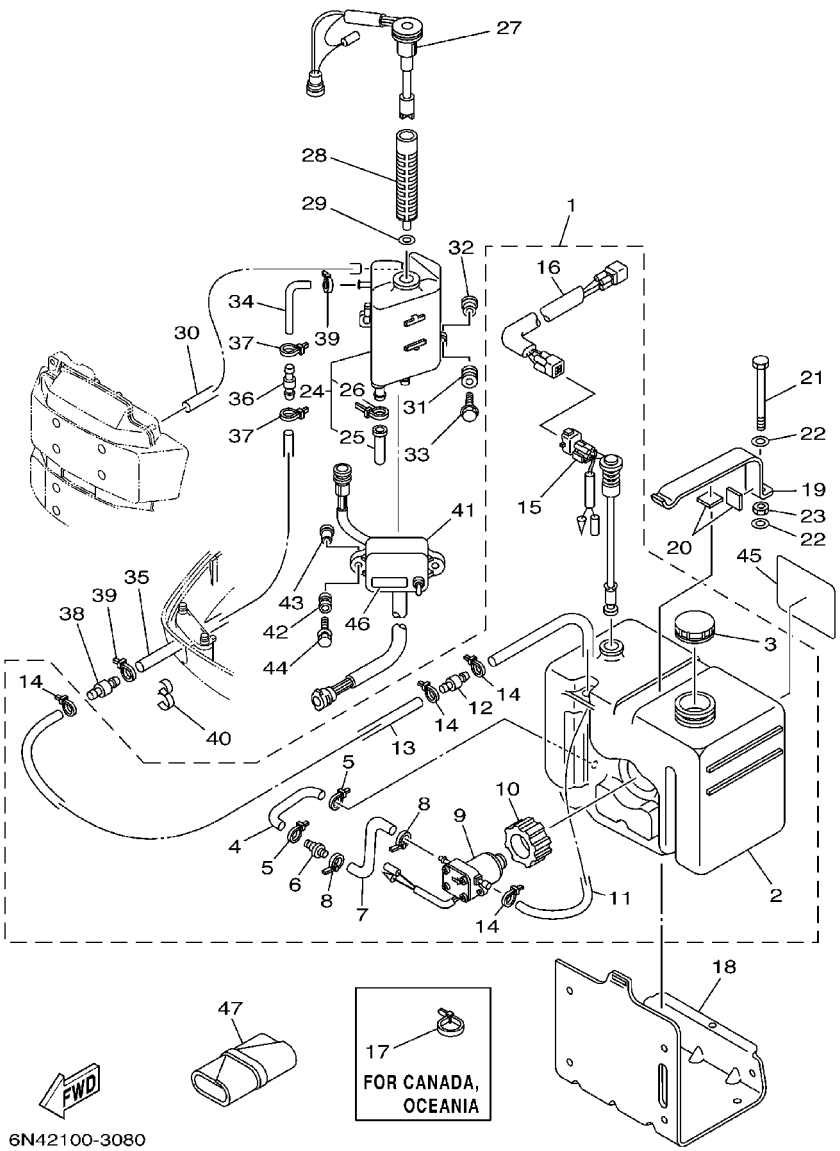

FIG. 8 OIL TANK

REF. NO.	PART NO.	DESCRIPTION	115	130	L130			REMARKS
1	6E5–21708–10	SUB OIL TANK ASSY	1	1				FOR CARIB
	6K1–21708–10	SUB OIL TANK ASSY			1			FOR CARIB
	61A–21708–20	SUB OIL TANK ASSY	1	1	1			FOR CANADA, OCEANIA
2	6E5–21733–20	.SUB TANK, OIL (10.5L)	1	1	1			
3	6E5–21770–03	.OIL TANK CAP ASSY	1	1	1			
4	6E5–24322–00	.PIPE 11	1	1	1			
5	90465–11M10	.CLAMP	2	2	2			
6	646–24251–02	.STRAINER 1	1	1	1			
7	6E5–24319–01	.PIPE, OIL	1	1	1			
8	90465–11M10	.CLAMP	2	2	2			
9	6E5–81900–01	.OIL FEED PUMP ASSY	1	1	1			
10	6E5–81922–00	.GROMMET	1	1	1			
11	6E5–24321–01	.PIPE 10	1	1	1			
12	6E5–24379–00	.PIPE, JOINT 4	1	1	1			
13	90445–11M81	.HOSE (L:3000)	1	1				FOR 6E5–21708–10
	90445–11M10	.HOSE			1			FOR 6K1–21708–10
	90445–11M26	.HOSE (L6500)	1	1	1			FOR 61A–21708–20
14	90465–11M10	.CLAMP	4	4	4			
15	6E5–85720–04	.OIL LEVEL GAUGE ASSY	1	1	1			
16	6R3–85721–30	.WIRE, LEAD (3M)	1	1				FOR 6E5–21708–10
	6R3–85721–80	.WIRE, LEAD (8M)	1	1	1			
17	90465–13M11	CLAMP	1	1	1			FOR CANADA, OCEANIA
18	6E5–21734–01–33	HOLDER, OIL SUB TANK	1	1	1			
19	6E5–21798–01–33	BRACKET, DAMPER	1	1	1			
20	6E5–21746–00	DAMPER	2	2	2			
21	97080–06100	BOLT	1	1	1			
22	92990–06600	WASHER, PLATE	2	2	2			

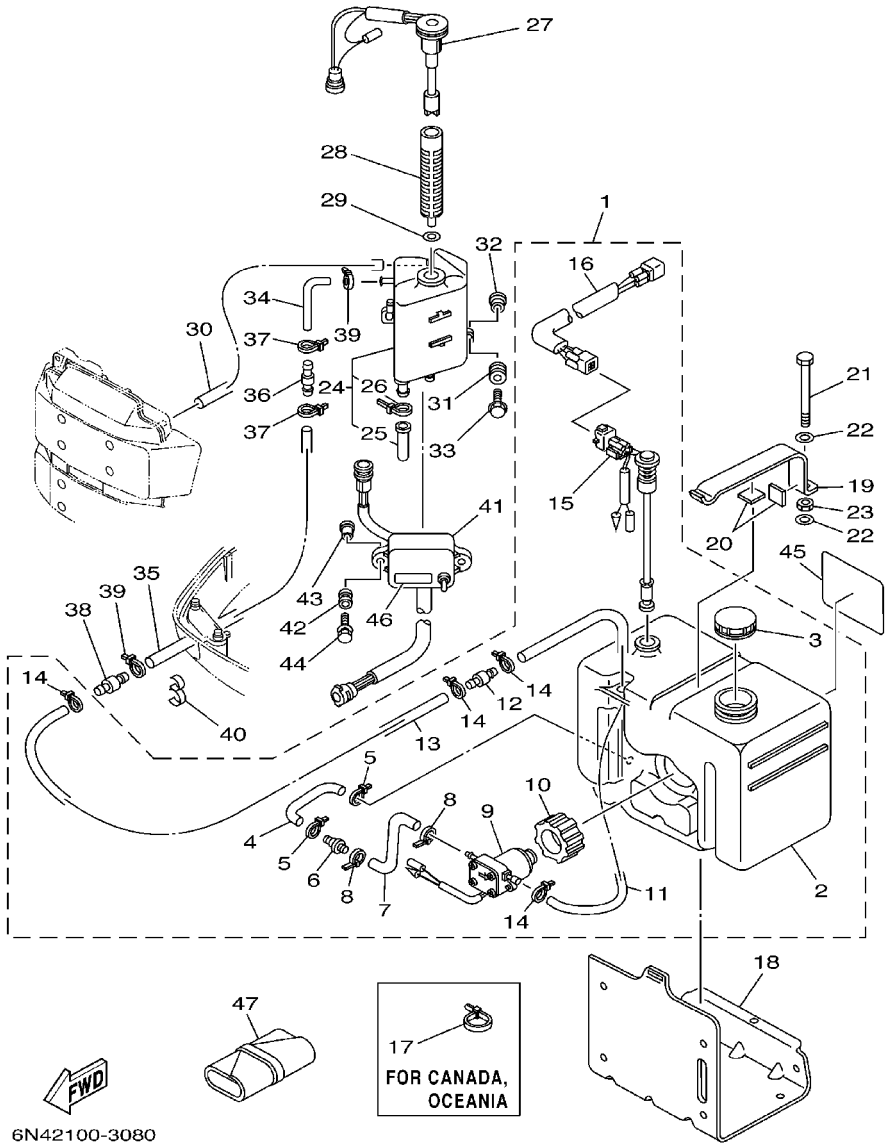

FIG. 8 OIL TANK

REF. NO.	PART NO.	DESCRIPTION	115	130	L130			REMARKS
23	95380–06600	NUT, HEXAGON	1	1	1			
24	6E5–21750–05	OIL TANK ASSY	1	1	1			
25	6E5–13448–00	.CAP	1	1	1			
26	90465–13M11	.CLAMP	1	1	1			
27	6G7–85730–04	OIL LEVEL GAUGE ASSY	1	1	1			
28	6E5–13411–00	STRAINER, OIL	1	1	1			
29	6E5–13414–00	GASKET, STRAINER COVER	1	1	1			
30	90445–05M02	HOSE (L380)	1	1	1			
31	6A0–82317–00	DAMPER, IGNITION COIL	3	3	3			
32	624–42542–00	PIPE	3	3	3			
33	90119–06M65	BOLT, WITH WASHER	3	3	3			
34	64E–24323–00	PIPE 12	1	1	1			
35	90445–12207	HOSE (L2400)	1	1	1			EXCEPT FOR CARIB
	90445–12M12	HOSE (L940)	1	1	1			FOR CARIB
36	6E5–24379–00	PIPE, JOINT 4	1	1	1			
37	90465–11M10	CLAMP	2	2	2			
38	6E5–24379–00	PIPE, JOINT 4	1	1	1			
39	90465–11M10	CLAMP	2	2	2			
40	90464–13M34	CLAMP	1	1	1			
41	6E5–85740–02	CONTROL UNIT ASSY	1	1	1			
42	6A0–82317–00	DAMPER, IGNITION COIL	2	2	2			
43	624–42542–00	PIPE	2	2	2			
44	90119–06M65	BOLT, WITH WASHER	2	2	2			
45	6E5–13437–43	MARK, CAUTION	1	1	1			FOR USA,OCEANIA
	6E5–13437–62	MARK, CAUTION	1	1	1			FOR CANADA,CARIB
46	6E5–85711–40	MARK, CAUTION	1	1	1			EXCEPT FOR CANADA
	6E5–85711–50	MARK, CAUTION	1	1				FOR CANADA

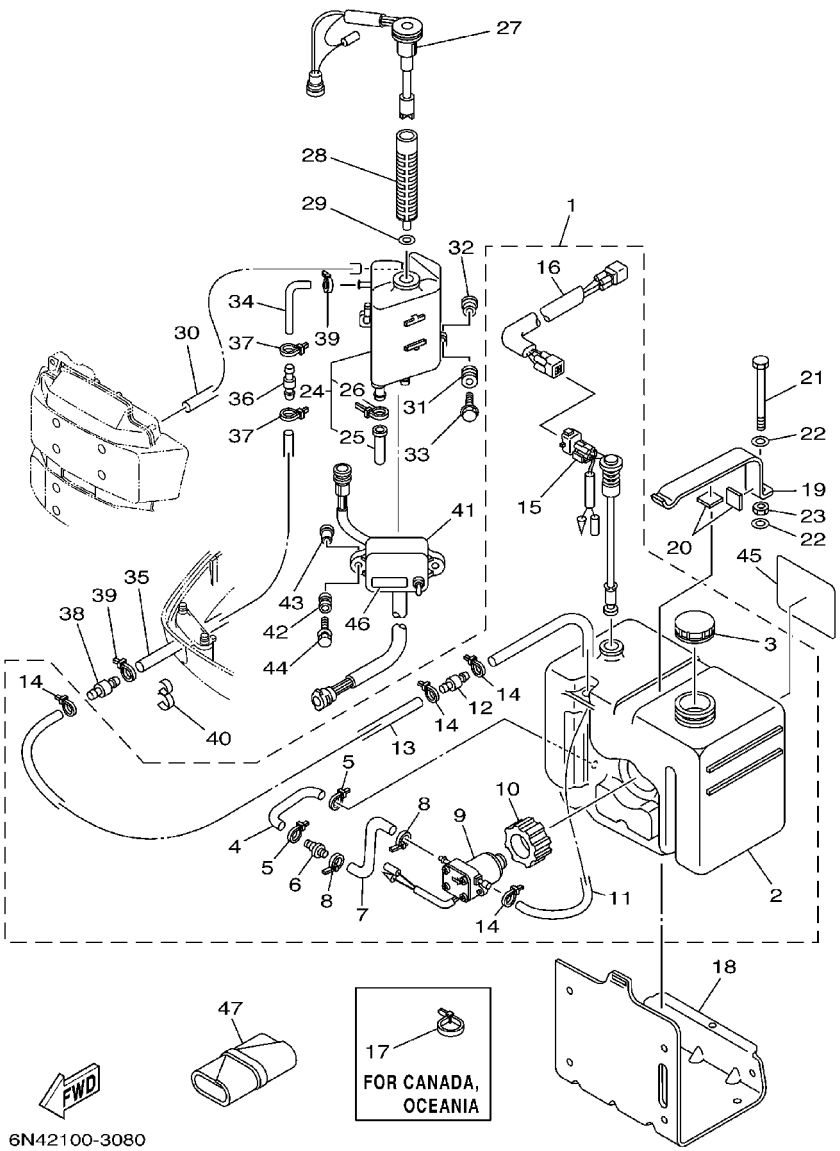

FIG. 8 OIL TANK

REF. NO.	PART NO.	DESCRIPTION	115	130	L130			REMARKS
47	656–W2810–02	TOOL KIT	1	1	1			FOR CARIB

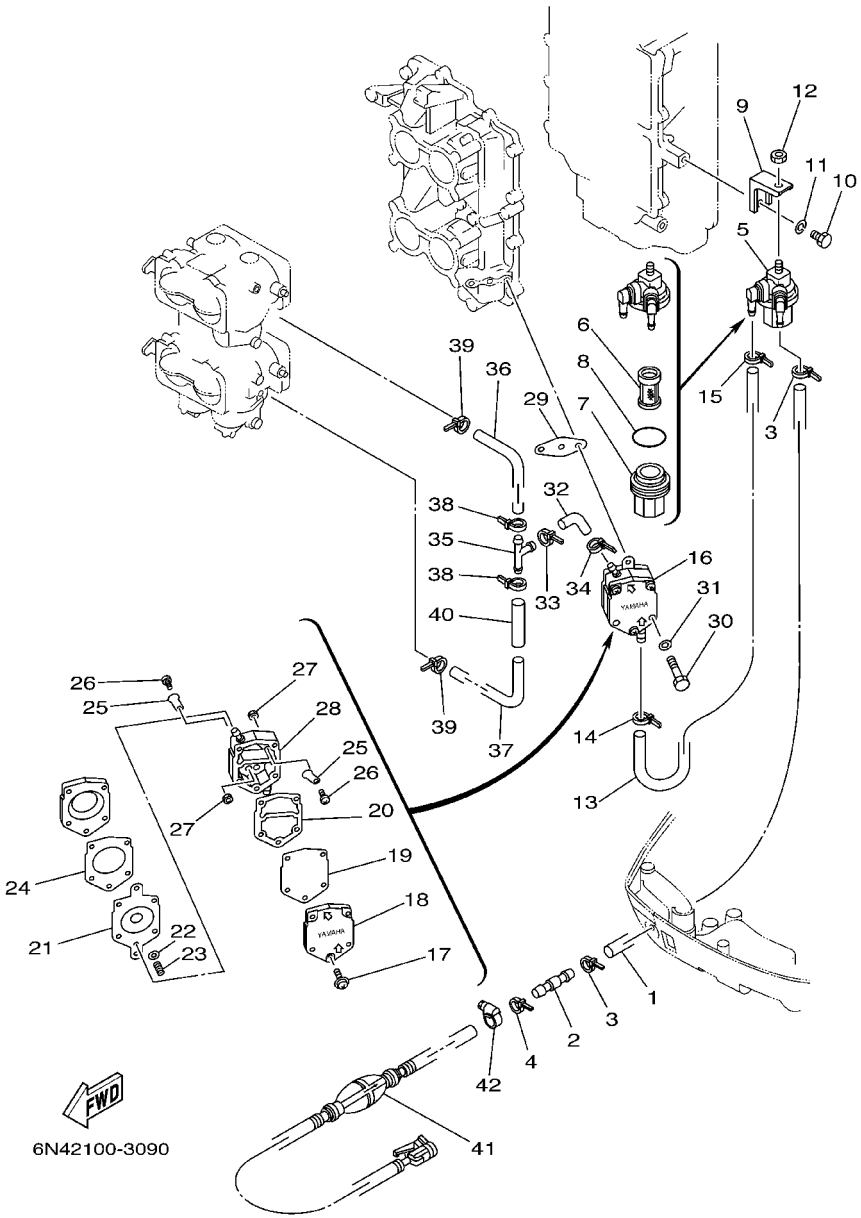

FIG. 9 FUEL 1

REF. NO.	PART NO.	DESCRIPTION	115	130	L130			REMARKS
1	6R3–24313–20	PIPE 3 (L:2820)	1	1	1			EXCEPT FOR CARIB
	6N7–24313–00	PIPE 3	1	1	1			FOR CARIB
2	6R3–24377–00	PIPE, JOINT 3	1	1	1			EXCEPT FOR USA
	6R3–24377–10	PIPE, JOINT 3	1	1				FOR USA
3	90465–11M10	CLAMP	2	2	2			
4	90465–11M10	CLAMP	1	1	1			
5	6R3–24560–00	FILTER ASSY	1	1	1			
6	61N–24563–00	.ELEMENT, FILTER	1	1	1			
7	61N–24521–00	.CUP, FILTER	1	1	1			
8	93210–32738	.O–RING	1	1	1			
9	6E5–24566–00	BRACKET, FILTER	1	1	1			
10	97013–06014	BOLT	1	1	1			
11	92903–06100	WASHER, SPRING	1	1	1			
12	95380–08600	NUT	1	1	1			
13	6E5–24314–00	PIPE 4	1	1	1			
14	90465–11M10	CLAMP	1	1	1			
15	90465–11M10	CLAMP	1	1	1			
16	6E5–24410–03	FUEL PUMP ASSY	1	1	1			
17	6E5–24444–00	.SCREW	3	3	3			
18	6E5–24413–00	.BODY 2	1	1	1			
19	6E5–24471–00	.DIAPHRAGM	1	1	1			
20	6E5–24435–00	.GASKET, BODY 2	1	1	1			
21	6E5–24411–00	.DIAPHRAGM	1	1	1			
22	648–24424–00	.SEAT, SPRING	1	1	1			
23	6E5–24423–00	.SPRING, DIAPHRAGM	1	1	1			
24	6E5–24434–02	.GASKET, BODY	1	1	1			
25	6A0–24421–01	.VALVE, CHECK	4	4	4			

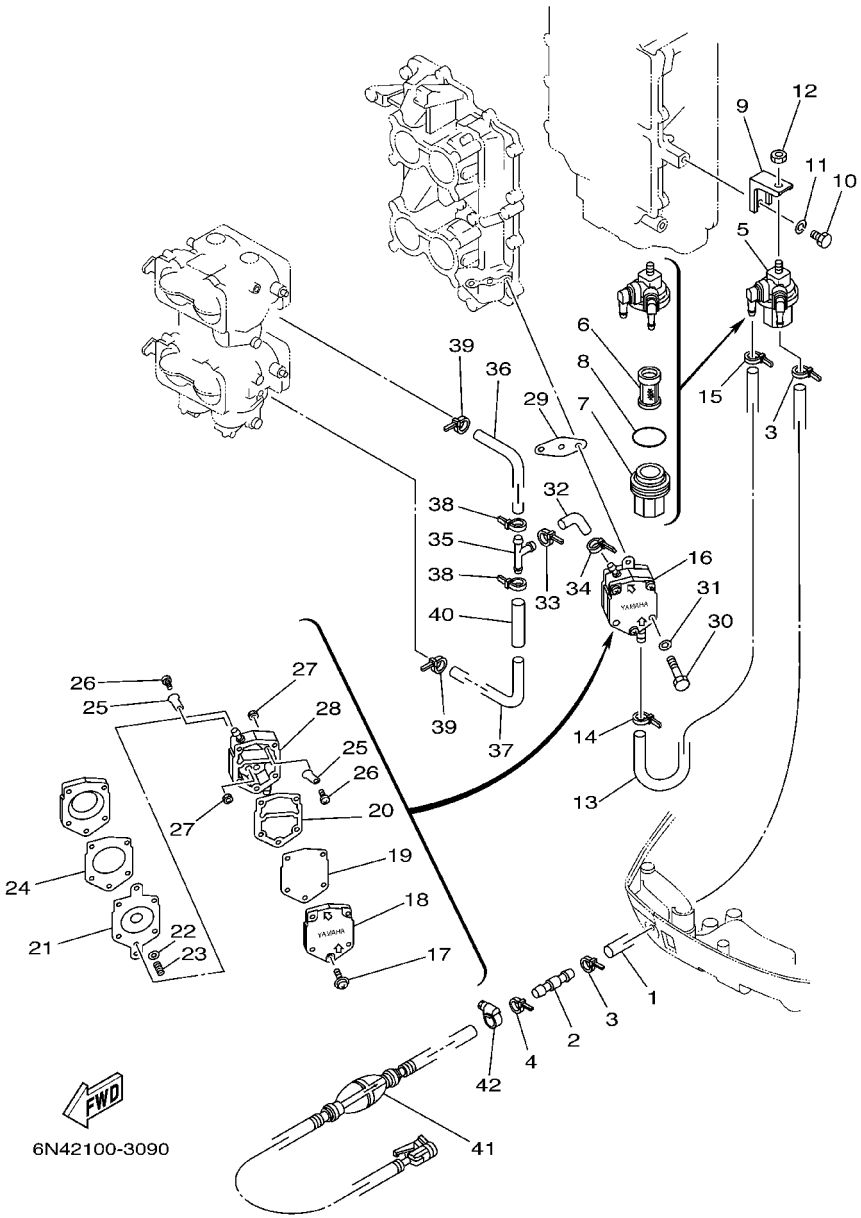

FIG. 9 FUEL 1

REF. NO.	PART NO.	DESCRIPTION	115	130	L130			REMARKS
26	6A0–14325–00	.SCREW, PAN HEAD	4	4	4			
27	95380–03600	.NUT	4	4	4			
28	6E5–24412–10	.BODY 1	1	1	1			
29	650–24431–A0	GASKET, FUEL PUMP 1	1	1	1			
30	97095–06050	BOLT	2	2	2			
31	92995–06600	WASHER	2	2	2			
32	6G5–24316–10	PIPE 6	1	1	1			
33	90465–11M10	CLAMP	1	1	1			
34	90465–11M10	CLAMP	1	1	1			
35	6E5–24376–10	PIPE, JOINT 1	1	1	1			
36	6G5–24318–10	PIPE, OVERFLOW	1	1	1			
37	6G5–24319–10	PIPE, OIL	1	1	1			
38	90465–11M10	CLAMP	2	2	2			
39	90465–11M10	CLAMP	2	2	2			
40	90446–15M07	HOSE	1	1	1			
41	6YK–24307–42	FUEL PIPE COMP. 2	1	1				AP FOR CANADA
42	90450–10M07	HOSE CLAMP ASSY	1	1				AP FOR CANADA

FIG. 10 FUEL 2

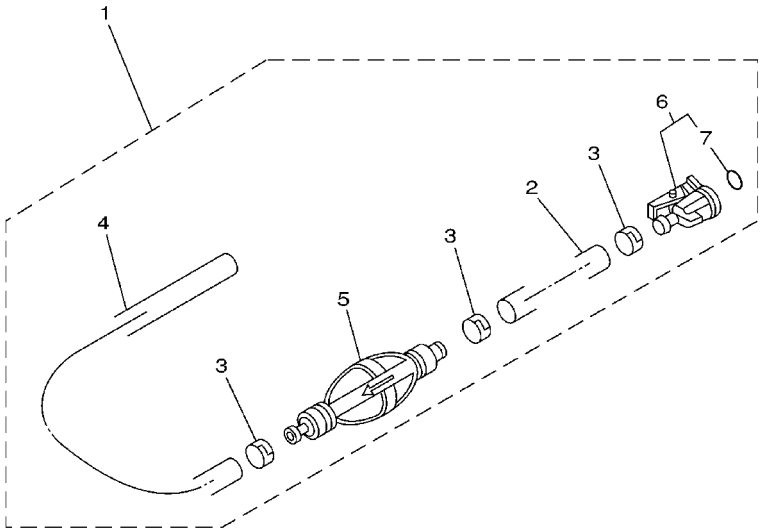

64L0100-1100

REF. NO.	PART NO.	DESCRIPTION	115	130	L130			REMARKS
1	6Y2–24306–42	FUEL PIPE COMP. 1		1	1			AP ”130”–FOR USA, “L130”–FOR CARIB
2	90445–13M01	.HOSE (L2050)		1	1			
3	6E5–24351–51	.BAND 1		3	3			
4	90445–13M35	.HOSE (L:250)		1	1			
5	6Y2–24360–52	.PRIMER PUMP ASSY		1	1			
6	6Y2–24305–04	.FUEL PIPE JOINT COMP. 2		1	1			
7	93210–08287	..O–RING		1	1			

FIG. 11 FUEL 3

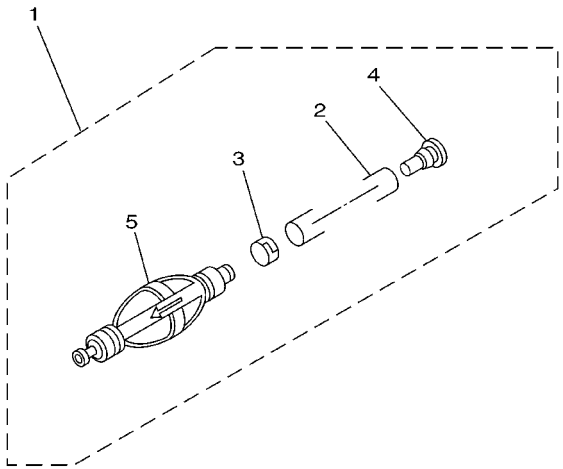

68V0100-0110

REF. NO.	PART NO.	DESCRIPTION	115	130	L130			REMARKS
1	6Y2–24307–41	FUEL PIPE COMP. 2	1	1	1			AP FOR OCEANIA
2	90445–13M01	.HOSE (L2050)	1	1	1			
3	6E5–24351–51	.BAND 1	1	1	1			
4	90480–06M19	.GROMMET	1	1	1			
5	6Y2–24360–52	.PRIMER PUMP ASSY	1	1	1			

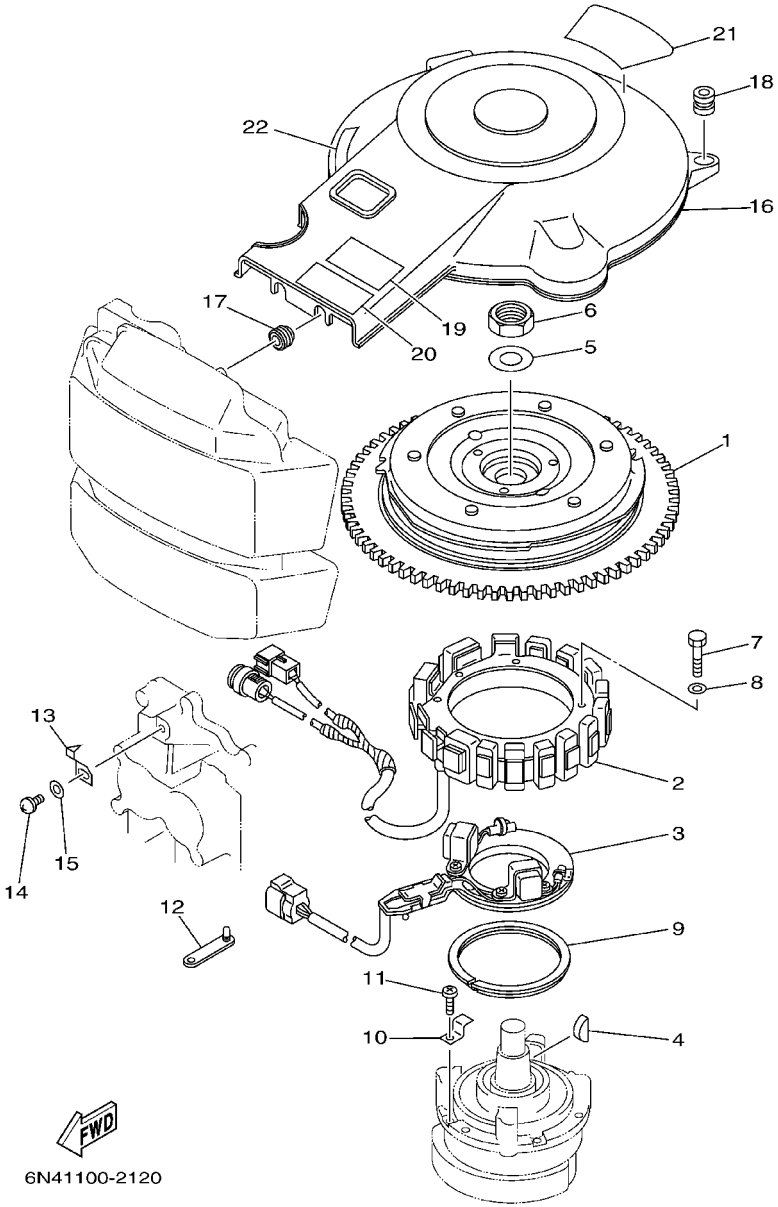

FIG. 12 GENERATOR

REF. NO.	PART NO.	DESCRIPTION	115	130	L130			REMARKS
1	6N7–85550–00	ROTOR ASSY	1	1	1			
2	6N7–85510–00	STATOR ASSY	1	1	1			
3	6E5–85580–00	COIL, PULSER	1	1	1			
4	90280–05015	KEY, WOODRUFF	1	1	1			
5	90201–21M18	WASHER, PLATE	1	1	1			
6	90170–20137	NUT	1	1	1			
7	97013–06065	BOLT	4	4	4			
8	92903–06600	WASHER, PLATE	4	4	4			
9	688–41611–00	RETAINER, MAGNETO BASE	1	1	1			
10	688–41612–00	RETAINER, MAGNETO BASE	4	4	4			
11	97880–06018	SCREW, PAN HEAD	4	4	4			
12	90464–12M00	CLAMP	1	1	1			
13	6E5–81332–00	PLATE, TIMING	1	1	1			
14	97885–06010	SCREW, PAN HEAD	1	1	1			
15	92995–06600	WASHER	1	1	1			
16	6N7–81337–00	COVER, FLYWHEEL	1	1	1			
17	90480–12M11	GROMMET	2	2	2			
18	663–82317–01	DAMPER, IGNITION COIL	2	2	2			
19	6A1–83625–51	MARK 5	1	1				FOR CANADA
20	6A1–83625–41	MARK 5	1	1	1			
21	6E5–14488–00	LABEL, CAUTION	1	1	1			
22	6K1–83623–41	MARK 3			1			

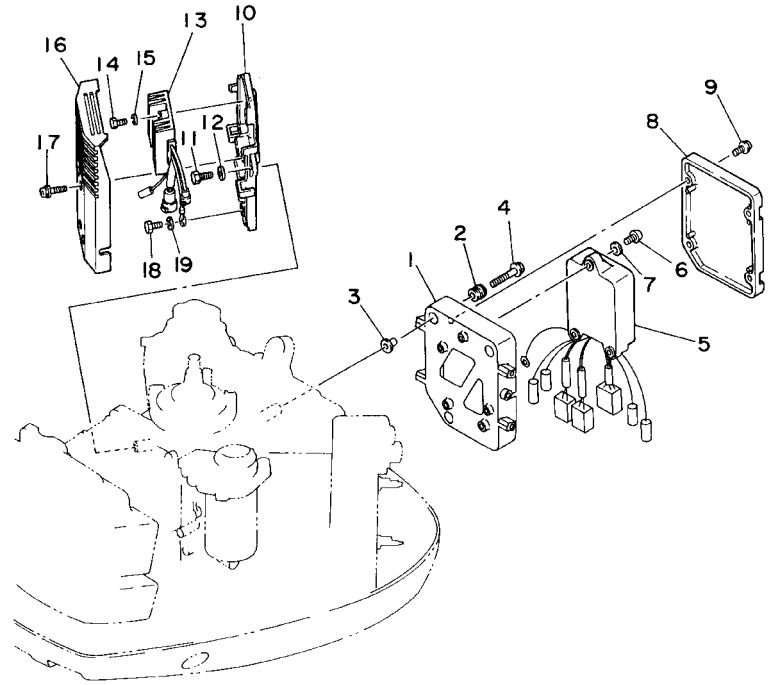

6N60010-4110

FIG. 13 ELECTRICAL 1

REF. NO.	PART NO.	DESCRIPTION	115	130	L130			REMARKS
1	6N7–85542–01–1S	BRACKET	1	1	1			
2	6A0–82317–00	DAMPER, IGNITION COIL	3	3	3			
3	624–42542–00	PIPE	3	3	3			
4	90119–06M59	BOLT, WITH WASHER	3	3	3			
5	6N7–85540–01	C.D.I. UNIT ASSY	1	1	1			
6	97880–06020	SCREW, PAN HEAD	3	3	3			
7	92990–06600	WASHER, PLATE	3	3	3			
8	6N7–85537–00	COVER	1	1	1			
9	90159–06M11	SCREW, WITH WASHER	4	4	4			
10	6N7–81948–00–94	BRACKET	1	1	1			
11	97013–06016	BOLT	3	3	3			
12	92903–06600	WASHER, PLATE	3	3	3			
13	6R3–81960–00	RECTIFIER & REGULATOR ASSY	1	1	1			
14	97013–06025	BOLT	2	2	2			
15	92903–06600	WASHER, PLATE	2	2	2			
16	6R3–81942–00	COVER	1	1	1			
17	90159–06M08	SCREW, WITH WASHER	4	4	4			
18	97013–06012	BOLT	1	1	1			
19	92903–06600	WASHER, PLATE	1	1	1			

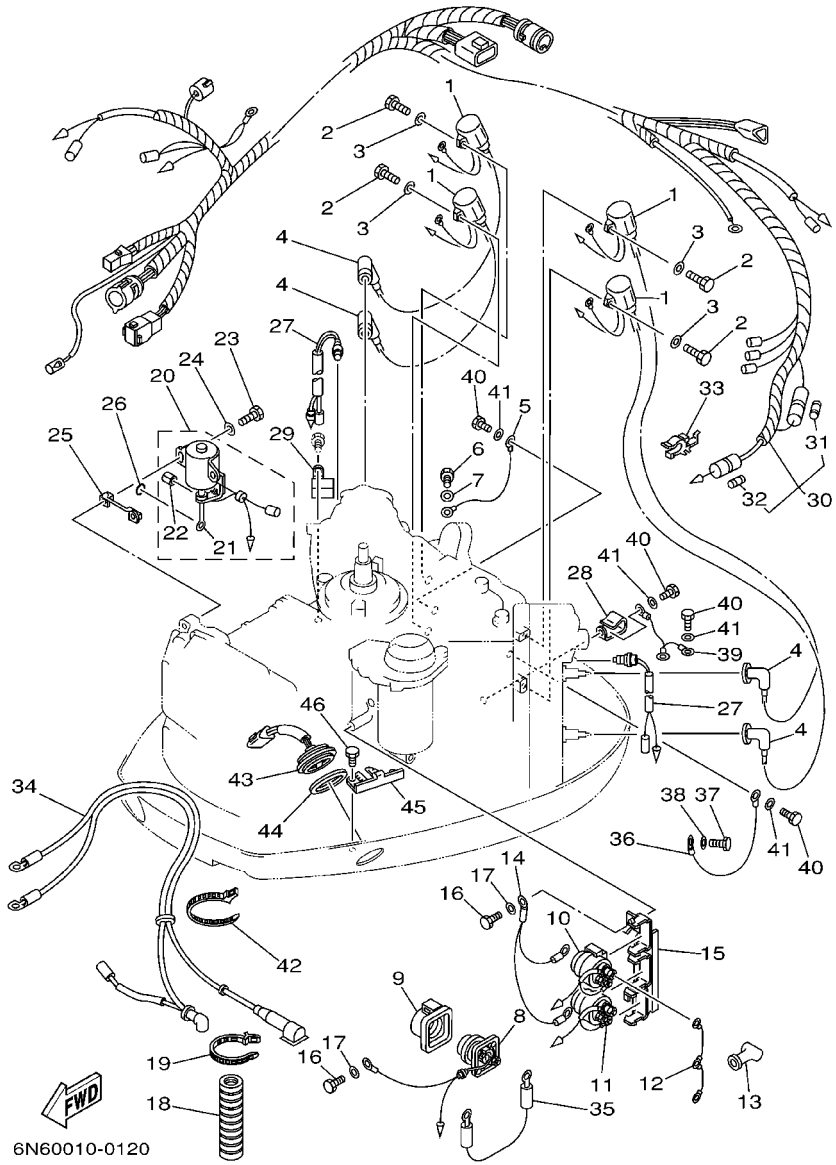

FIG. 14 ELECTRICAL 2

REF. NO.	PART NO.	DESCRIPTION	115	130	L130			REMARKS
1	6R3–85570–01	IGNITION COIL ASSY	4	4	4			
2	97095–06020	BOLT	4	4	4			
3	92995–06600	WASHER	4	4	4			
4	663–82370–01	PLUG CAP ASSY	4	4				FOR USA
	6G1–82370–21	PLUG CAP ASSY	4	4	4			EXCEPT FOR USA
5	662–82519–00	WIRE, EARTH LEAD	1	1	1			
6	97095–06012	BOLT	1	1	1			
7	92995–06600	WASHER	1	1	1			
8	61A–81941–00	STARTER RELAY ASSY	1	1	1			
9	689–81952–10	HOLDER, RELAY	1	1	1			
10	6E5–81950–00	RELAY ASSY	1	1	1			
11	6E5–8195A–00	RELAY ASSY	1	1	1			
12	6G5–87149–10	CONNECTOR	1	1	1			
13	6G5–82119–00	COVER, LEAD WIRE	2	2	2			
14	6E5–82116–00	WIRE, MINUS LEAD	1	1	1			
15	6E5–81948–22	BRACKET	1	1	1			
16	97095–06016	BOLT	2	2	2			
17	92995–06600	WASHER	2	2	2			
18	6N7–83557–00	TUBE	1	1	1			I.DIA.: 22MM
19	90465–13M18	CLAMP	1	1	1			
20	6N7–86110–00	SOLENOID	1	1	1			
21	6N7–86116–00	.WIRE, PULL	1	1	1			
22	91609–30010	.PIN, SPRING	1	1	1			
23	97095–06030	BOLT	2	2	2			
24	92995–06600	WASHER	2	2	2			
25	6N7–86112–00	STAY, SOLENOID	1	1	1			
26	93210–03261	O–RING	1	1	1			

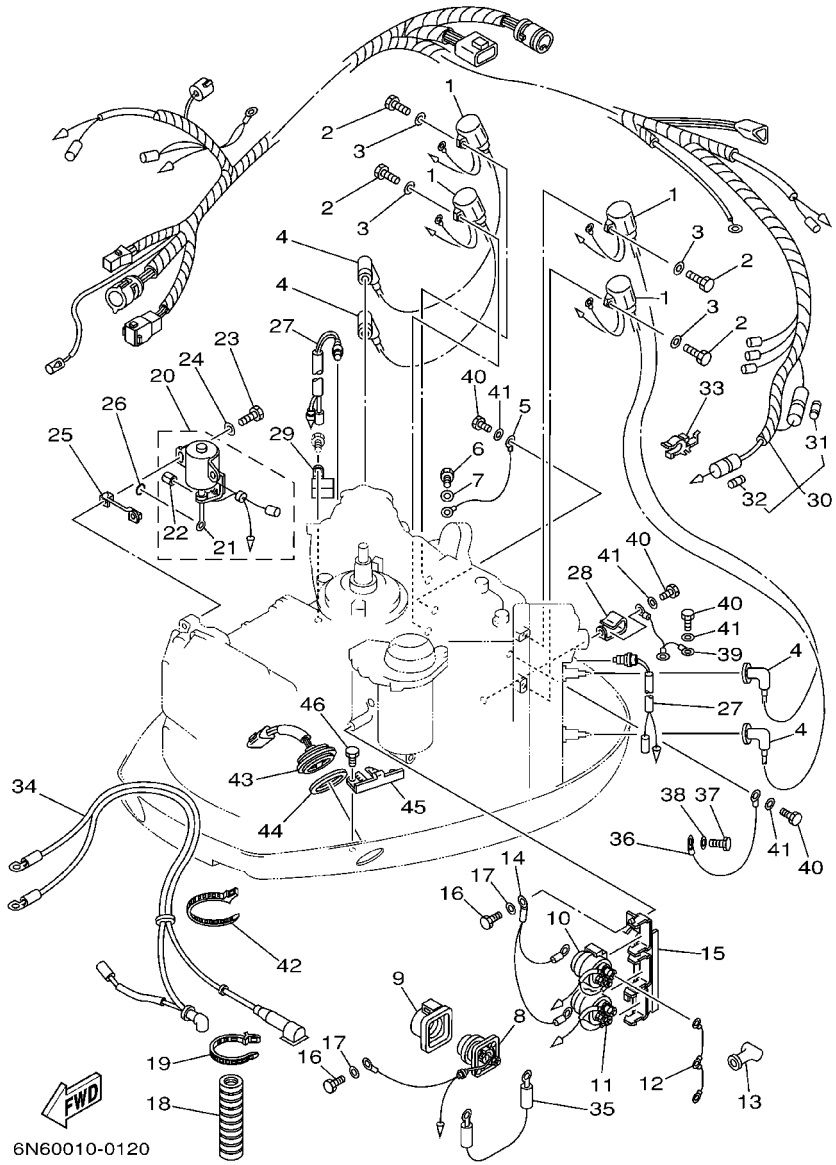

FIG. 14 ELECTRICAL 2

REF. NO.	PART NO.	DESCRIPTION	115	130	L130			REMARKS
27	688–82560–10	THERMO SWITCH ASSY	2	2	2			
28	90465–05M87	CLAMP	1	1	1			
29	90465–08M89	CLAMP	1	1	1			
30	6N7–82590–14	WIRE HARNESS ASSY	1	1	1			
31	663–82151–00	.FUSE (12V–20A)	1	1	1			
32	705–82151–00	.FUSE (30A)	1	1	1			
33	6G5–82152–00	HOLDER, FUSE	2	2	2			
34	6N7–82105–02	WIRE HARNESS	1	1	1			
35	6E5–82117–01	WIRE, LEAD	1	1	1			
36	6R3–82519–00	WIRE, EARTH LEAD	1	1	1			
37	97095–06012	BOLT	1	1	1			
38	92995–06600	WASHER	1	1	1			
39	6E5–82531–10	WIRE, LEAD	1	1	1			
40	97095–06012	BOLT	4	4	4			
41	92995–06600	WASHER	4	4	4			
42	90465–13M18	CLAMP	1	1	1			
43	6R3–82563–00	TRIM & TILT SWITCH ASSY	1	1	1			
44	6E5–82587–00	GASKET	1	1	1			
45	6R3–83614–00	BRACKET	1	1	1			
46	97095–06012	BOLT	2	2	2			

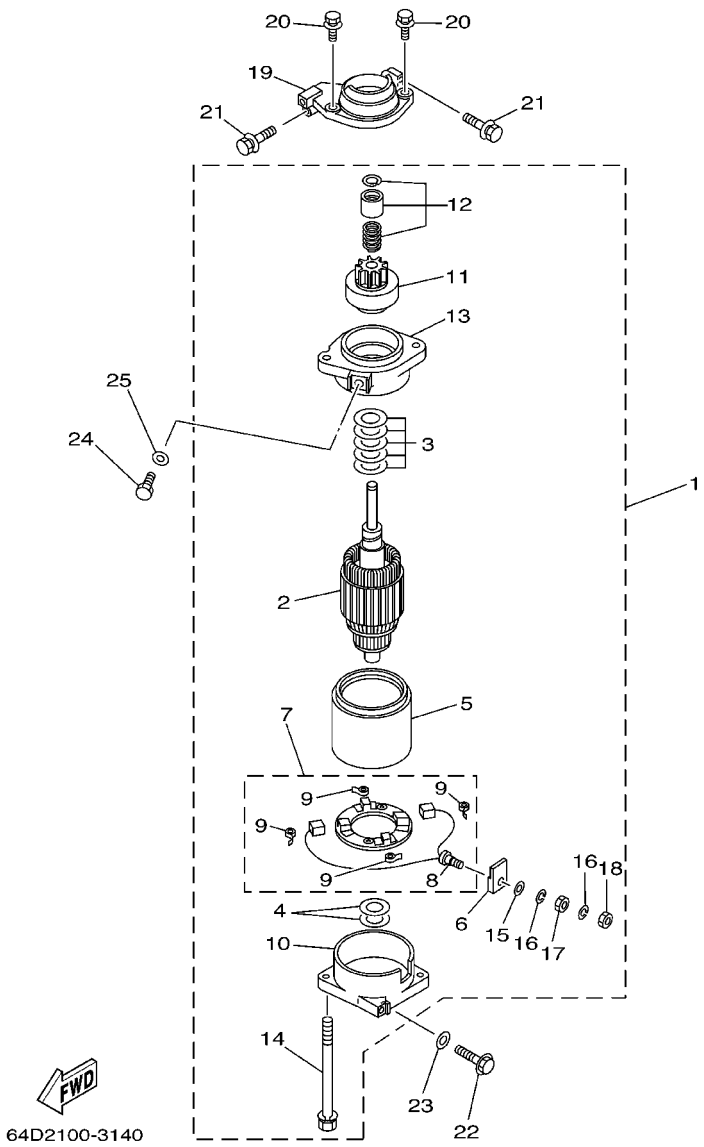

FIG. 15 STARTING MOTOR

REF. NO.	PART NO.	DESCRIPTION	115	130	L130			REMARKS
1	6N7–81800–10	STARTING MOTOR ASSY	1	1	1			
2	6N7–81850–10	.ARMATURE ASSY	1	1	1			
3	61A–81809–00	.WASHER KIT	1	1	1			
4	61A–81824–00	.WASHER 2	2	2	2			
5	6N7–81810–00	.STATOR ASSY	1	1	1			
6	6K7–8182G–10	.BUSH, TERMINAL	1	1	1			
7	6N7–81840–00	.BRUSH HOLDER ASSY	1	1	1			
8	6N7–81801–00	..BRUSH SET	1	1	1			
9	6N7–81813–00	..SPRING, BRUSH	4	4	4			
10	6N7–81820–10	.REAR BRACKET ASSY	1	1	1			
11	6N7–81807–00	.GEAR ASSY, STARTING MOTOR	1	1	1			
12	6N7–81857–00	.RETAINER	1	1	1			
13	6N7–81830–00	.FRONT BRACKET ASSY	1	1	1			
14	6K7–81826–10	.BOLT	2	2	2			
15	6E5–8182E–10	.WASHER	1	1	1			
16	6E5–8182F–10	.WASHER	2	2	2			
17	6E5–8182A–10	.NUT	1	1	1			
18	6E5–8182K–10	.NUT	1	1	1			
19	6R3–81822–00–94	BRACKET, STARTING MOTOR	1	1	1			
20	90119–08M76	BOLT, WITH WASHER	2	2	2			
21	90119–08M77	BOLT, WITH WASHER	2	2	2			
22	90119–08M57	BOLT, WITH WASHER	1	1	1			
23	92990–08600	WASHER, PLATE	1	1	1			
24	97095–08016	BOLT	1	1	1			
25	92995–08600	WASHER	1	1	1			

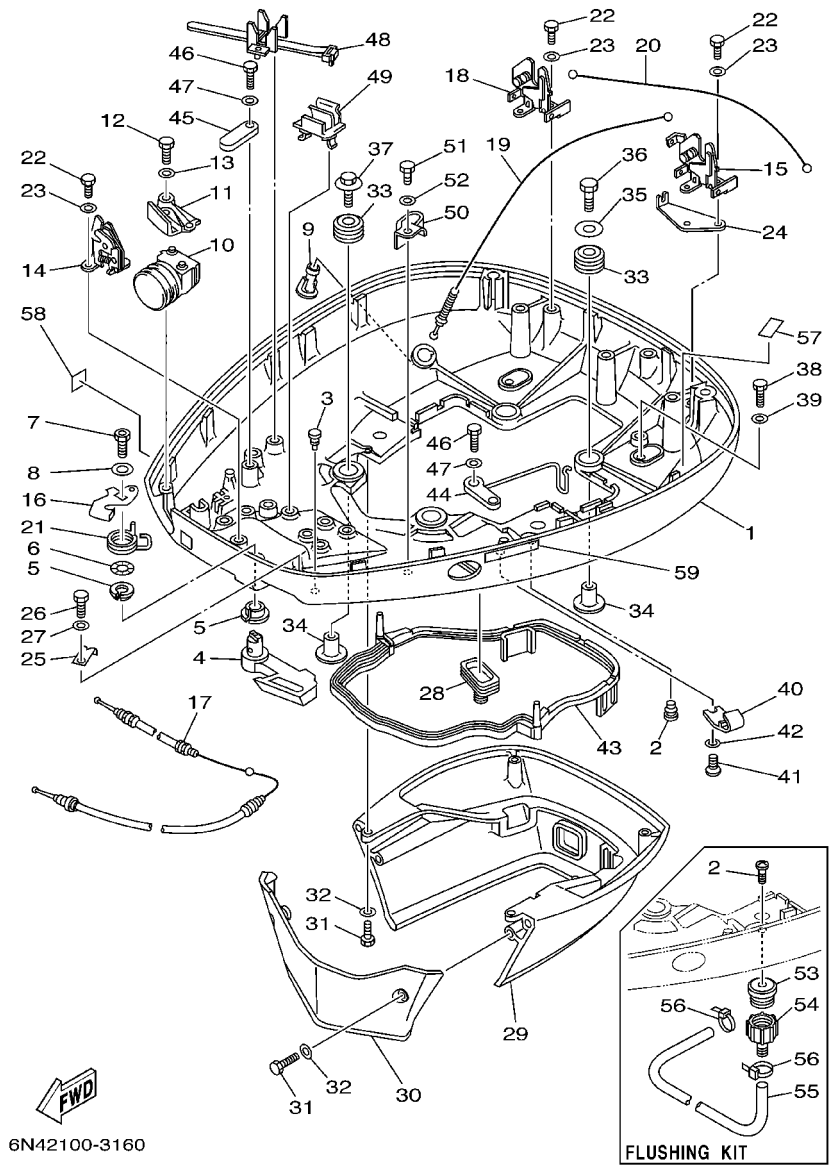

FIG. 16 BOTTOM COWLING

REF. NO.	PART NO.	DESCRIPTION	115	130	L130			REMARKS
1	6N7–42711–43–8D	COWLING, BOTTOM	1	1	1			
2	90169–05M00	SCREW, TRUSS HEAD TAPPING	1	1	1			FLUSHING KIT
	90480–06M19	GROMMET	1	1				FOR STD
3	6H4–42748–00	GROMMET	1	1	1			
4	6N7–42815–01–8D	LEVER, CLAMP	1	1	1			
5	90386–13M88	BUSH	2	2	2			
6	90206–13M10	WASHER, WAVE	1	1	1			
7	90109–08M45	BOLT	1	1	1			
8	92990–08200	WASHER, PLAIN	1	1	1			
9	6E5–44391–00	NIPPLE, HOSE	1	1	1			
10	6N7–42725–30	GROMMET	1	1				FOR USA,CANADA
	6N7–42725–20	GROMMET	1	1	1			FOR OCEANIA,CARIB
11	6N7–42738–02–5B	PLATE, FITTING	1	1	1			
12	97095–06016	BOLT	2	2	2			
13	92995–06600	WASHER	2	2	2			
14	6R3–42824–00	BASE, CLAMP LEVER	1	1	1			
15	6R3–42811–01	STAY	1	1	1			
16	6R3–42816–00	LEVER, CLAMP	1	1	1			
17	6N7–42850–00	WIRE COMPLETE	1	1	1			
18	6R3–42811–10	STAY	1	1	1			
19	6N7–42850–10	WIRE COMPLETE	1	1	1			
20	6N7–42850–20	WIRE COMPLETE	1	1	1			
21	6R3–42813–00	SPRING, CLAMP LEVER	1	1	1			
22	97095–06016	BOLT	6	6	6			
23	92995–06600	WASHER	6	6	6			
24	6N7–42828–00	PLATE, CLAMP	1	1	1			
25	6R3–42828–00	PLATE, CLAMP	1	1	1			

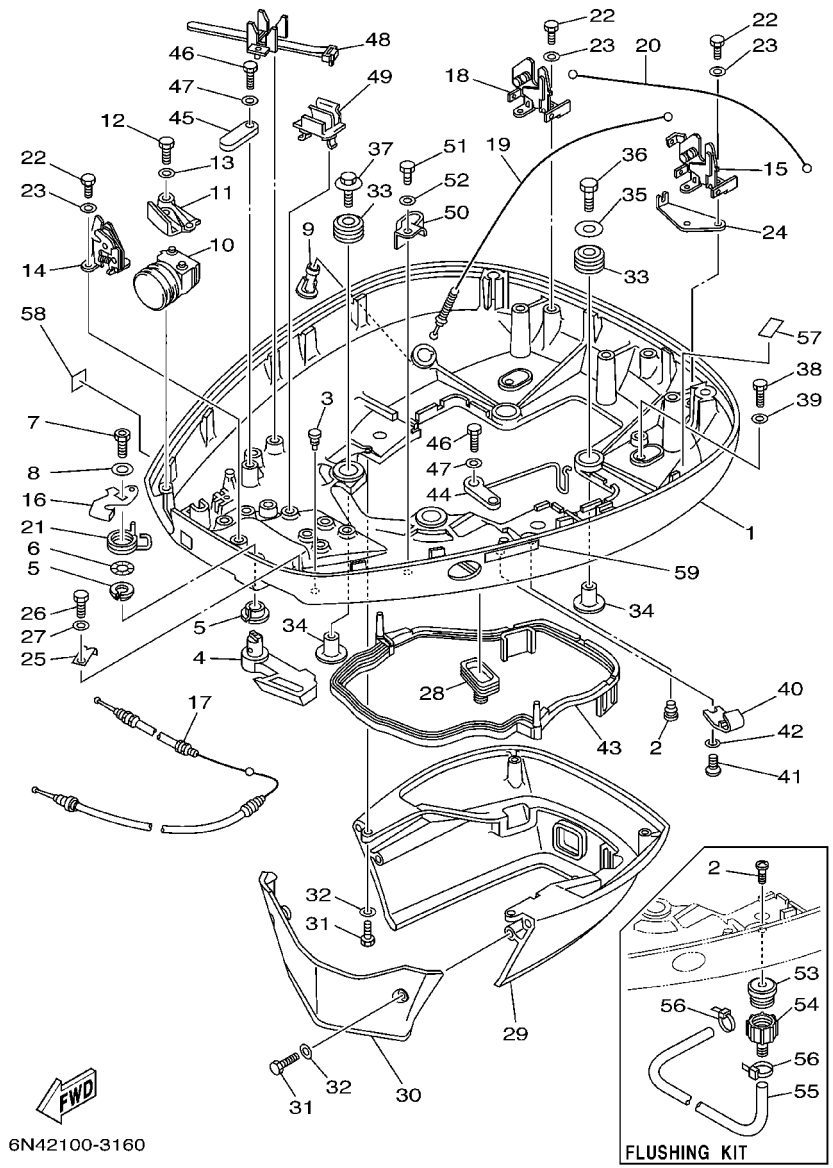

FIG. 16 BOTTOM COWLING

REF. NO.	PART NO.	DESCRIPTION	115	130	L130			REMARKS
26	97095-06010	BOLT	1	1	1			
27	92995-06600	WASHER	1	1	1			
28	688-42726-10	GROMMET	1	1	1			
29	6N7-42741-01-8D	APRON	1	1	1			
30	6R3-42771-01-8D	APRON	1	1	1			
31	97095-06020	BOLT	4	4	4			
32	92995-06600	WASHER	4	4	4			
33	90480-22M15	GROMMET	4	4	4			
34	90387-08M37	COLLAR	4	4	4			
35	90201-08M54	WASHER, PLATE	1	1	1			
36	97075-08035	BOLT	1	1	1			
37	90119-08M22	BOLT, WITH WASHER	3	3	3			
38	97095-06020	BOLT	2	2	2			
39	92995-06600	WASHER	2	2	2			
40	6E5-24367-10	CLAMP, FUEL PIPE 2	1	1	1			
41	90157-06M01	SCREW, PAN HEAD	1	1	1			
42	92990-06600	WASHER, PLATE	1	1	1			
43	6E5-42716-00	RUBBER, SEAL 1	1	1	1			
44	6K7-82588-00	PLATE	1	1	1			
45	6E5-82588-00	PLATE	1	1	1			
46	97095-06020	BOLT	2	2	2			
47	92995-06600	WASHER	2	2	2			
48	688-82594-00	CLAMP	1	1	1			
49	6E5-82594-00	CLAMP	4	4	4			
50	90465-12M25	CLAMP	1	1	1			
51	97095-06012	BOLT	1	1	1			
52	92995-06600	WASHER	1	1	1			

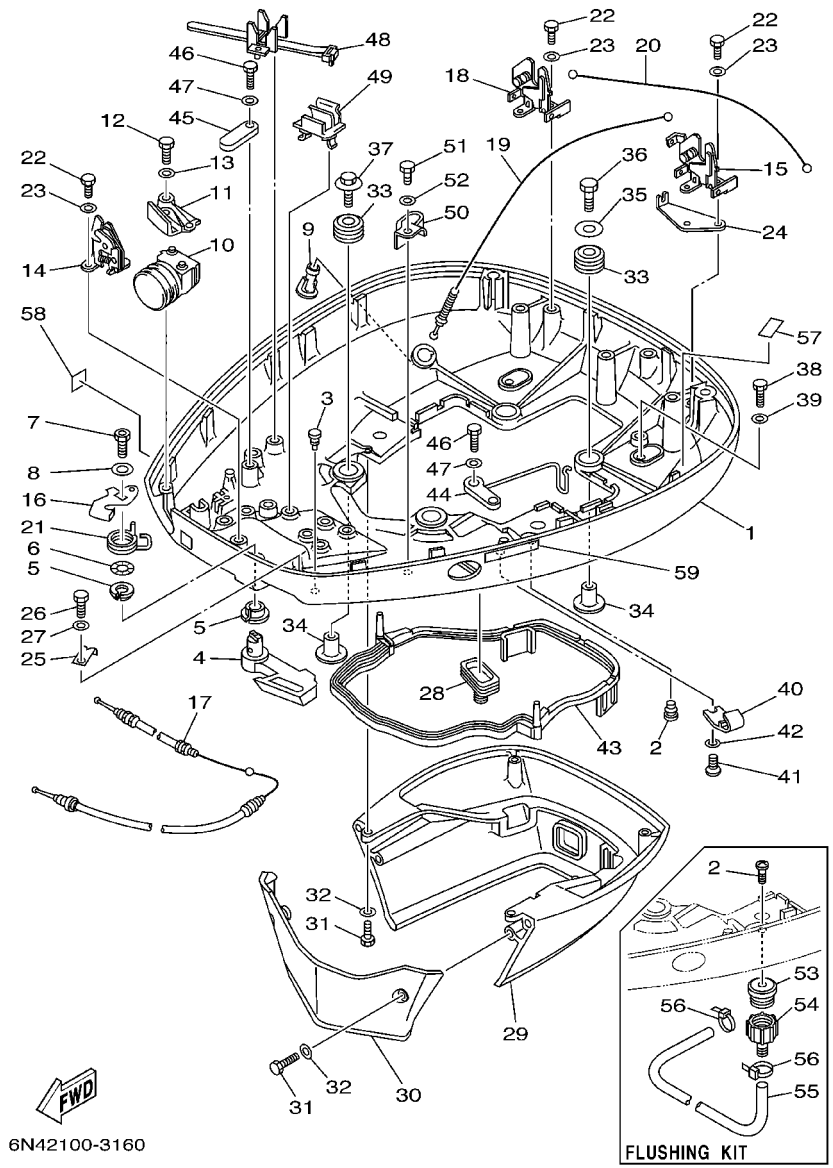

FIG. 16 BOTTOM COWLING

REF. NO.	PART NO.	DESCRIPTION	115	130	L130			REMARKS
53	6R3–12572–00	ADAPTER	1	1	1			FLUSHING KIT
54	6R3–12580–00	JOINT ASSY	1	1	1			FLUSHING KIT
55	90445–11M35	HOSE (L540)	1	1	1			FLUSHING KIT
56	90465–11M10	CLAMP	2	2	2			FLUSHING KIT
57	6G5–42791–10	MARK 1	1					
	6K7–42791–00	MARK 1		1	1			
58	6A1–28176–00	LABEL, CAUTION	1	1	1			FOR CARIB
59	6E3–8257H–00	PLATE, MARK	1	1	1			FOR CARIB

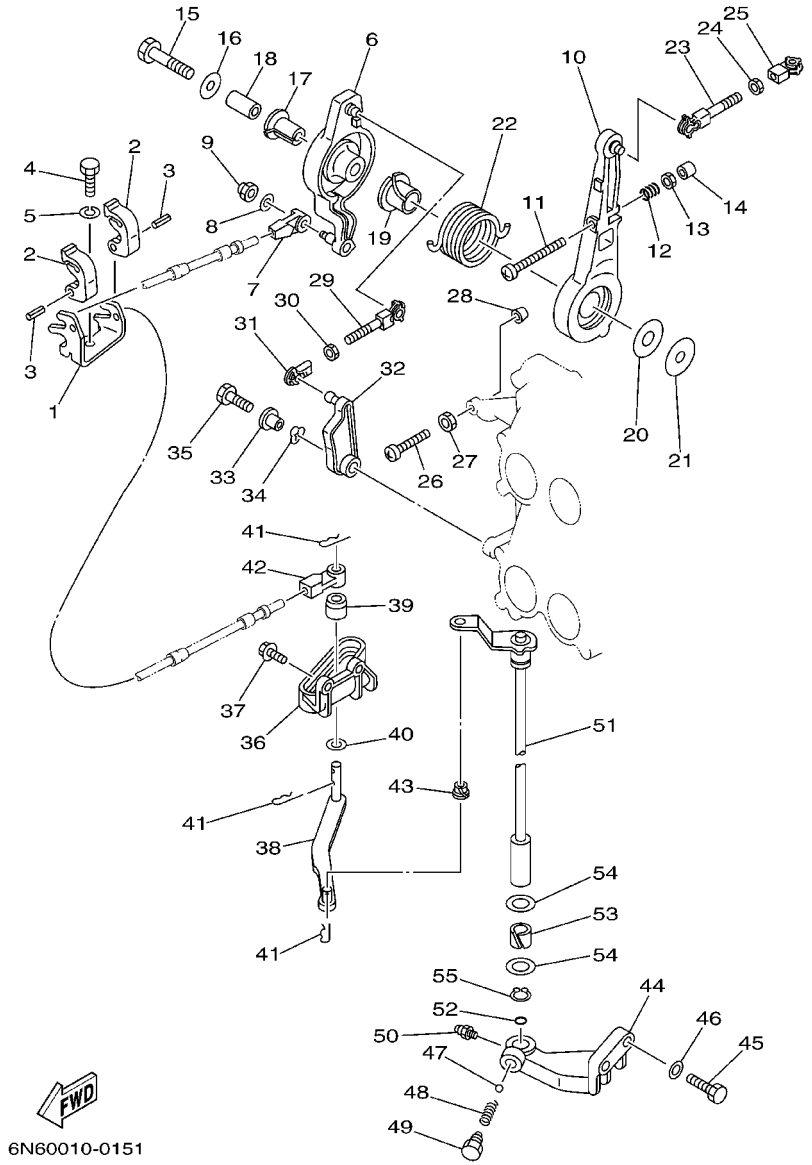

FIG. 17 CONTROL

REF. NO.	PART NO.	DESCRIPTION	115	130	L130			REMARKS
1	6E5–48531–00	BRACKET, REMOTE CONTROL 1	1	1	1			
2	6E5–48538–00	CLAMP, CABLE	2	2	2			
3	91690–30012	PIN, SPRING	2	2	2			
4	97095–08020	BOLT	1	1	1			
5	92995–08100	WASHER	1	1	1			
6	6E5–41632–02–1S	LEVER, MAGNETO CONTROL	1	1	1			
7	6E5–48344–00	CABLE END, REMOTE CONTROL	1	1	1			
8	92990–06200	WASHER, PLAIN	1	1	1			
9	90185–06M07	NUT, SELF–LOCKING	1	1	1			
10	6E5–41631–01–1S	LEVER, MAGNETO CONTROL	1	1	1			
11	90157–06013	SCREW, PAN HEAD	1	1	1			
12	90501–16M12	SPRING, COMPRESSION	1	1	1			
13	95303–06600	NUT	1	1	1			
14	688–44194–00	CAP	1	1	1			
15	97013–08045	BOLT	1	1	1			
16	90201–08M23	WASHER, PLATE	1	1	1			
17	90386–12089	BUSH	1	1	1			
18	90387–08M16	COLLAR	1	1	1			
19	90386–22M13	BUSH	1	1	1			
20	90202–12092	WASHER, PLATE	1	1	1			
21	90201–08M13	WASHER, PLATE	1	1	1			
22	90508–29M12	SPRING, TORSION	1	1	1			
23	6E5–41636–01	ROD, MAGNETO CONTROL	1	1	1			
24	95380–05600	NUT	1	1	1			
25	662–41237–01	JOINT, LINK	1	1	1			
26	90157–06013	SCREW, PAN HEAD	1	1	1			
27	95303–06600	NUT	1	1	1			

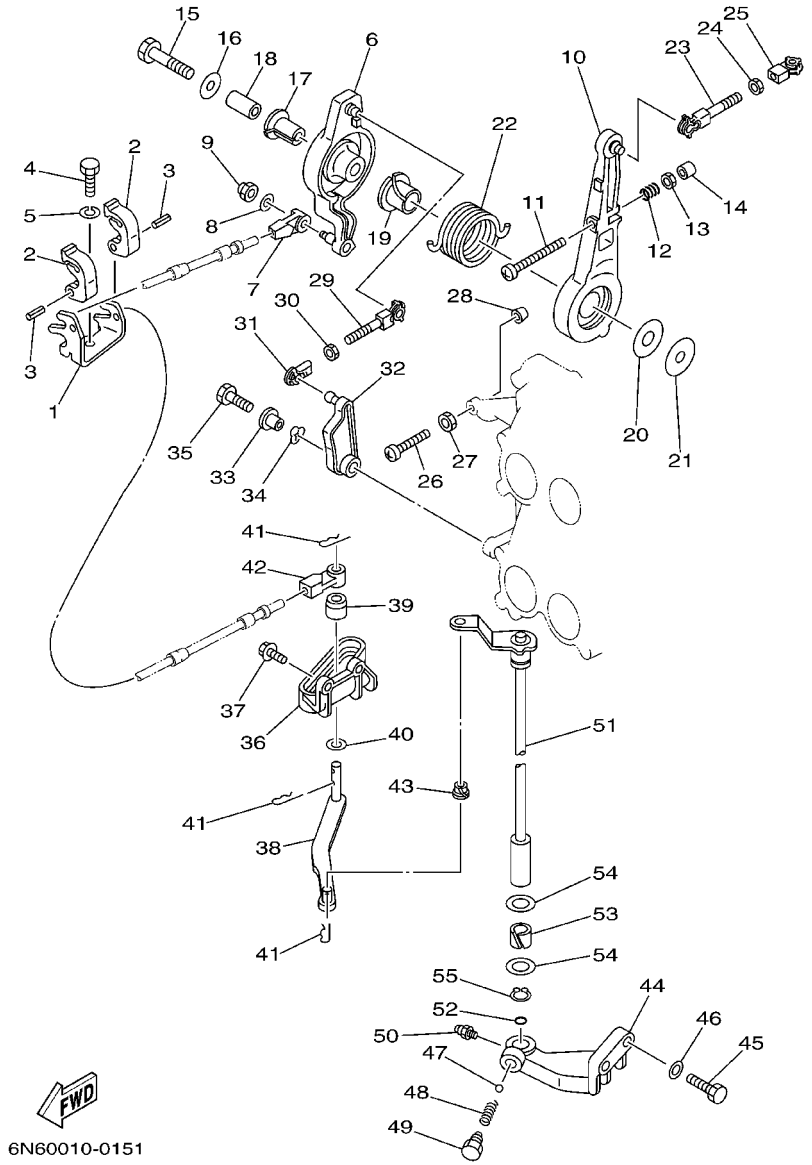

FIG. 17 CONTROL

REF. NO.	PART NO.	DESCRIPTION	115	130	L130			REMARKS
28	688–44194–00	CAP	1	1	1			
29	688–41636–00	ROD, MAGNETO CONTROL	1	1	1			
30	95380–05600	NUT	1	1	1			
31	662–41237–01	JOINT, LINK	1	1	1			
32	6E5–41213–00	CAM, ACCEL.	1	1	1			
33	90387–06M29	COLLAR	1	1	1			
34	90206–10M04	WASHER, WAVE	1	1	1			
35	97095–06025	BOLT	1	1	1			
36	6E5–44117–00–1S	BRACKET	1	1	1			
37	90119–06MA2	BOLT, WITH WASHER	2	2	2			
38	68F–44121–00	LEVER, SHIFT ROD	1	1	1			
39	6E5–44122–00	BUSHING, SHIFT ROD LEVER	1	1	1			
40	90202–08M20	WASHER, PLATE	1	1	1			
41	90468–18008	CLIP	3	3	3			
42	6E5–48344–00	CABLE END, REMOTE CONTROL	1	1	1			
43	90386–06M12	BUSH	1	1	1			
44	6E5–44118–01–94	BRACKET	1	1	1			
45	97013–08030	BOLT	2	2	2			
46	92903–08600	WASHER, PLATE	2	2	2			
47	93501–04M02	BALL	1	1	1			
48	90501–12082	SPRING, COMPRESSION	1	1	1			
49	648–42715–00	BUSHING	1	1	1			
50	93700–06M03	NIPPLE, GREASE	1	1	1			
51	6E5–44120–03	HANDLE GEAR SHIFT ASSY	1	1				L
	6E5–44120–23	HANDLE GEAR SHIFT ASSY	1	1	1			X
52	93210–09165	O–RING	1	1	1			
53	90386–16M66	BUSH	1	1	1			

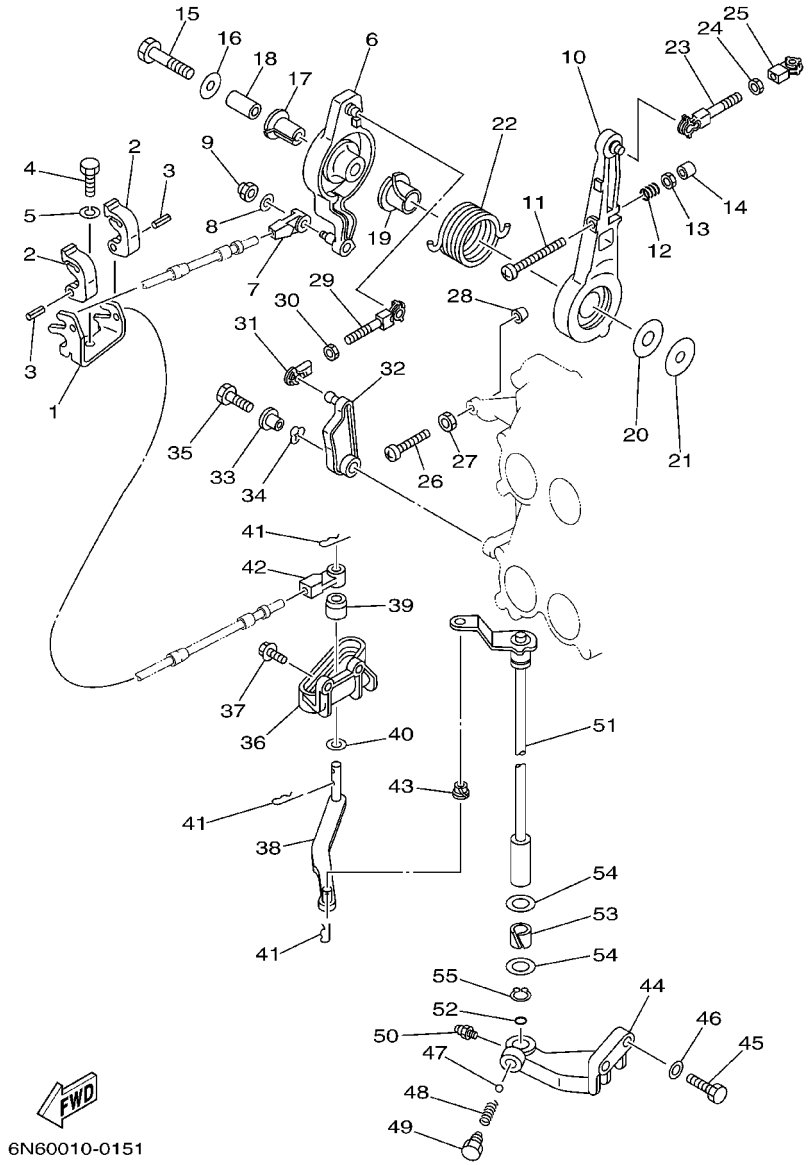

FIG. 17 CONTROL

REF. NO.	PART NO.	DESCRIPTION	115	130	L130			REMARKS
54	90202–16061	WASHER, PLATE	2	2	2			
55	93410–16006	CIRCLIP	1	1	1			

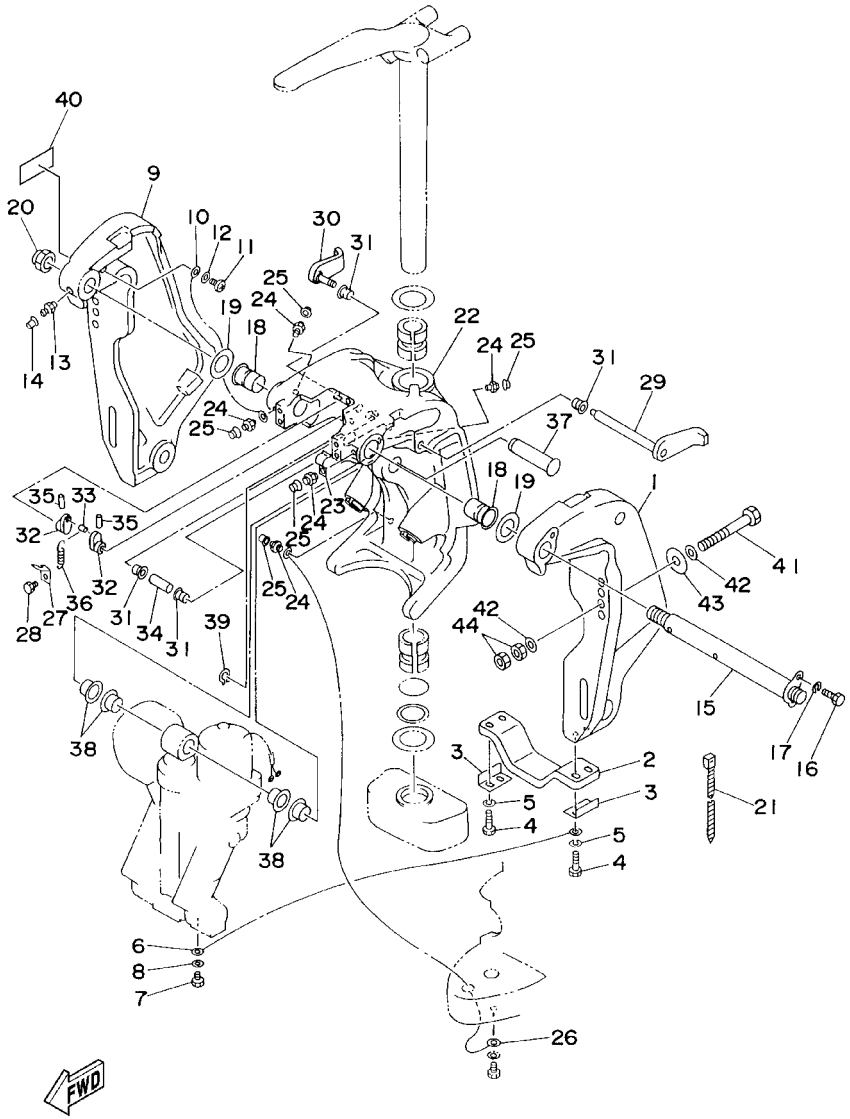

6N41100-2180

FIG. 18 BRACKET 1

REF. NO.	PART NO.	DESCRIPTION	115	130	L130			REMARKS
1	64E–43111–02–8D	BRACKET, CLAMP	1	1	1			
2	6G5–45251–02	ANODE	1	1	1			
3	6G5–44526–00	PLATE	2	2	2			
4	97095–06030	BOLT	4	4	4			
5	92995–06100	WASHER, SPRING	4	4	4			
6	6E5–82148–00	WIRE, LEAD 4	1	1	1			
7	97095–06010	BOLT	1	1	1			
8	92995–06600	WASHER	1	1	1			
9	64E–43112–02–8D	BRACKET, CLAMP	1	1	1			
10	6E5–82148–00	WIRE, LEAD 4	1	1	1			
11	97880–06012	SCREW, PAN HEAD	1	1	1			
12	92990–06600	WASHER, PLATE	1	1	1			
13	93700–06M03	NIPPLE, GREASE	1	1	1			
14	663–45119–00	CAP, GREASE NIPPLE	1	1	1			AP
15	64E–43131–01	BOLT, CLAMP BRACKET	1	1	1			
16	97095–08020	BOLT	1	1	1			
17	92995–08100	WASHER	1	1	1			
18	90386–25M31	BUSH	2	2	2			
19	90201–26M59	WASHER, PLATE	2	2	2			
20	90185–22M11	NUT, SELF–LOCKING	1	1	1			
21	90465–11M10	CLAMP	1	1	1			
22	64E–43311–10–8D	BRACKET, SWIVEL 1	1	1				L
	64E–43311–20–8D	BRACKET, SWIVEL 1	1	1	1			X
23	90465–08M63	CLAMP	1	1	1			
24	93700–06M03	NIPPLE, GREASE	5	5	5			
25	663–45119–00	CAP, GREASE NIPPLE	5	5	5			AP
26	6E5–82147–00	WIRE, LEAD 4	1	1				L

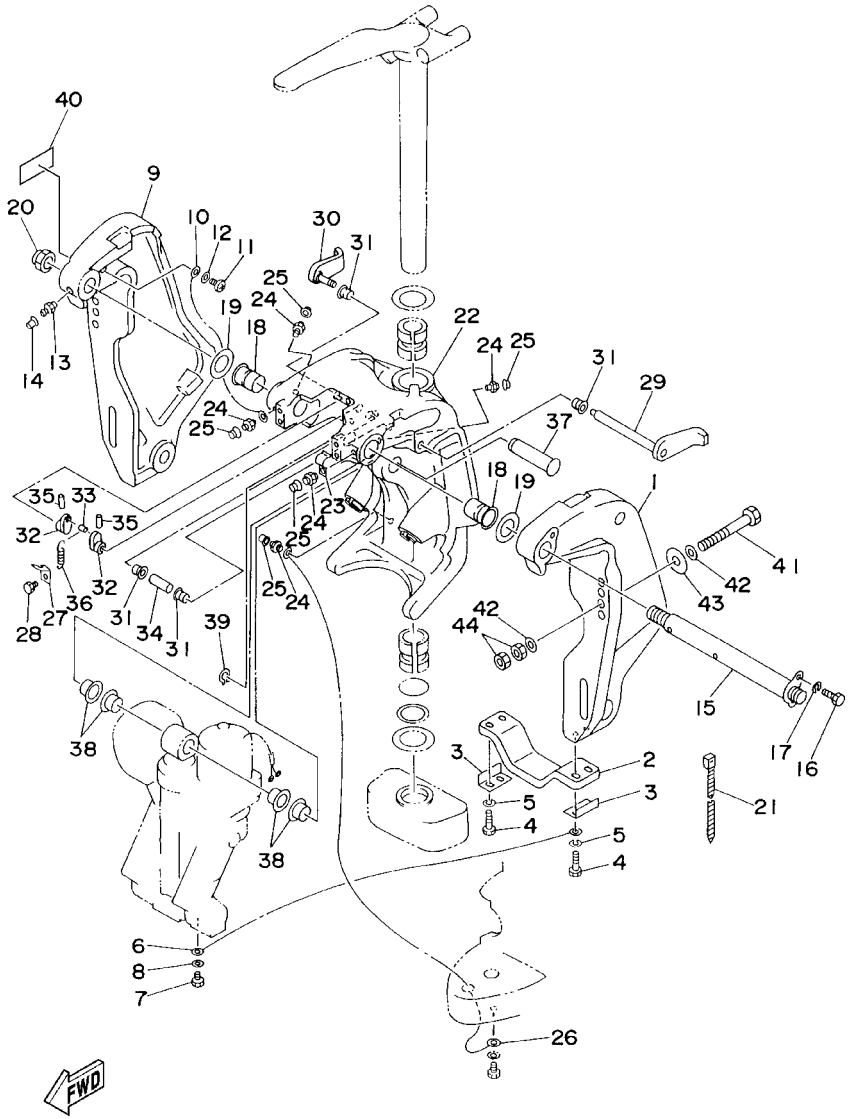

6N41100-2180

FIG. 18 BRACKET 1

REF. NO.	PART NO.	DESCRIPTION	115	130	L130			REMARKS
26	6E5–82147–20	WIRE, LEAD 4	1	1	1			X
27	6G5–43144–00	HOOK, SPRING	1	1	1			
28	97095–06010	BOLT	1	1	1			
29	6G5–43181–02	LEVER, TILT STOP	1	1	1			
30	6G5–43185–02	LEVER, TILT STOP	1	1	1			
31	90386–10M16	BUSH	4	4	4			
32	6G5–43148–00	COLLAR, DISTANCE	2	2	2			
33	90249–06M19	PIN	1	1	1			
34	90387–10M05	COLLAR	1	1	1			
35	91690–30020	PIN, SPRING	2	2	2			
36	90506–14M24	SPRING, TENSION	1	1	1			
37	64E–43126–00	PIN, UPPER SHOCK MOUNT	1	1	1			
38	90386–22M98	BUSH	4	4	4			
39	93410–22M11	CIRCLIP	1	1	1			
40	63V–82377–50	LABEL (SPARK,IGNITION)	1	1				FOR CANADA
41	90101–12M05	BOLT (L:130MM)	4	4				FOR USA,CANADA
	90101–12M77	BOLT (L:150MM)	2	2				FOR USA,CANADA
	90101–12M03	BOLT (L:115MM)	4	4	4			FOR OCEANIA,CARIB
42	90201–13M01	WASHER, PLATE	8	8	8			
43	90201–12M05	WASHER, PLATE	4	4	4			
44	95380–12600	NUT	8	8	8			

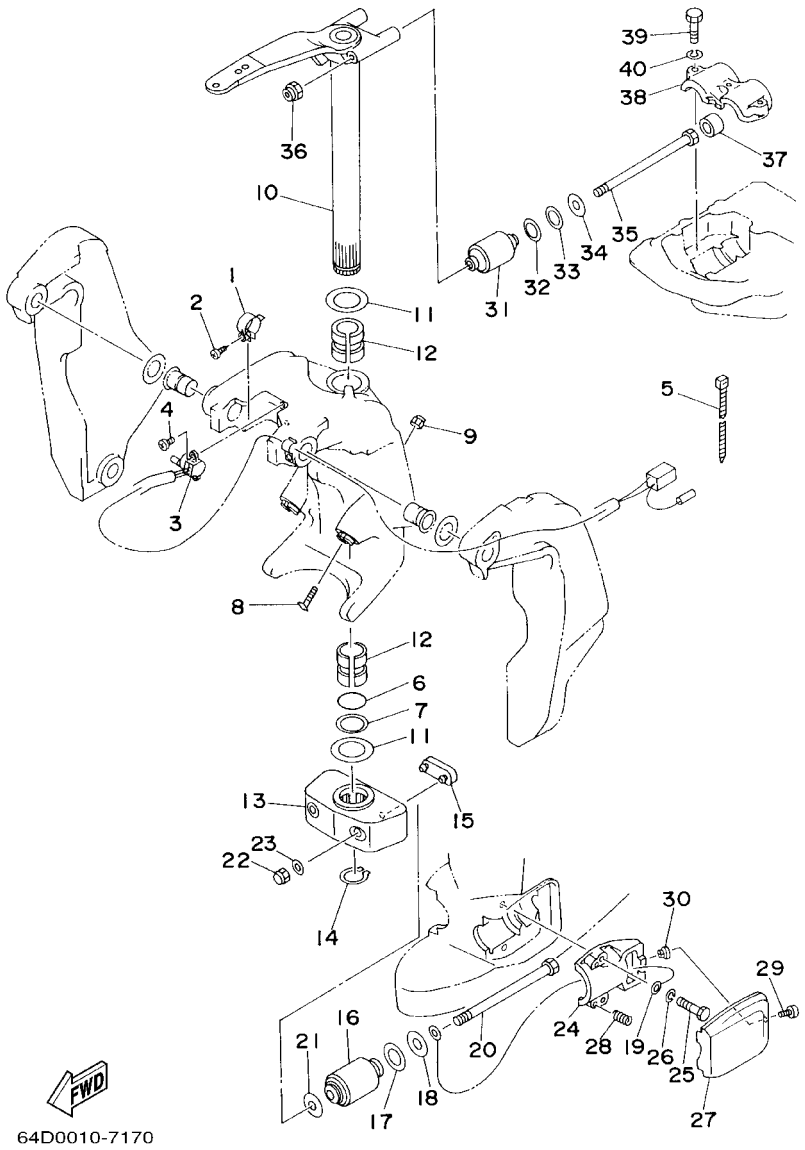

FIG. 19 BRACKET 2

REF. NO.	PART NO.	DESCRIPTION	115	130	L130			REMARKS
1	64E–43139–02	CAM, TRIM SENDER	1	1	1			
2	97780–60525	SCREW, TAPPING	1	1	1			
3	64E–83672–02	TRIM SENDER	1	1	1			
4	97885–06016	SCREW, PAN HEAD	2	2	2			
5	90465–11M10	CLAMP	3	3	3			
6	93210–37MH7	O–RING	1	1	1			
7	90202–40M47	WASHER, PLATE	1	1	1			
8	61A–43376–00	BOLT, THRUST RECEIVER	2	2	2			
9	95780–10300	NUT, FLANGE	2	2	2			
10	6E5–42510–A1–8D	STEERING BRACKET ASSY	1	1				L
	6E5–42510–B1–8D	STEERING BRACKET ASSY	1	1	1			X
11	90201–38M60	WASHER, PLATE	2	2	2			
12	90386–38M32	BUSH	2	2	2			
13	6G5–44551–01–8D	HOUSING, LOWER MOUNT RUBBER	1	1	1			
14	93410–37M04	CIRCLIP	1	1	1			
15	6E5–44575–00	DAMPER, LOWER MOUNT RUBBER	1	1	1			
16	6E5–44555–00–94	MOUNT DAMPER, LOWER SIDE	2	2	2			
17	90202–32M19	WASHER, PLATE	2	2	2			
18	90201–16M55	WASHER, PLATE	2	2	2			
19	6E5–82149–00	WIRE, LEAD 3	1	1	1			
20	90109–14M34	BOLT	2	2	2			
21	90201–15M58	WASHER, PLATE	2	2	2			
22	95380–14800	NUT	2	2	2			
23	92995–14600	WASHER	2	2	2			
24	6E5–44552–01–94	HOUSING, LOWER MOUNT RUBBER	2	2	2			
25	97095–10045	BOLT	4	4	4			
26	92995–10100	WASHER	4	4	4			

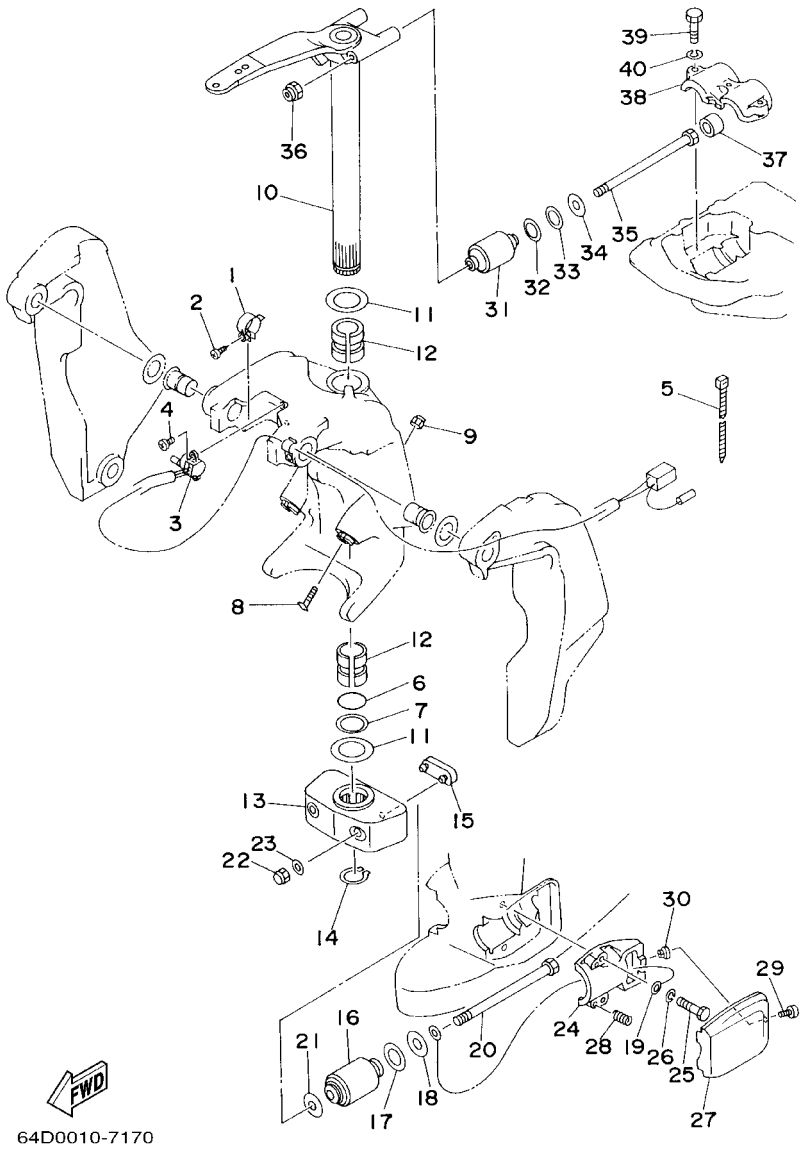

FIG. 19 BRACKET 2

REF. NO.	PART NO.	DESCRIPTION	115	130	L130			REMARKS
27	6E5–44553–01–8D	COVER, LOWER MOUNT	2	2	2			
28	90501–16M28	SPRING, COMPRESSION	4	4	4			
29	97885–06016	SCREW, PAN HEAD	2	2	2			
30	90179–06066	NUT	2	2	2			
31	6E5–44514–00–94	MOUNT DAMPER, UPPER SIDE	2	2	2			
32	90201–26M57	WASHER, PLATE	2	2	2			
33	90202–26M18	WASHER, PLATE	2	2	2			
34	90201–14M56	WASHER, PLATE	2	2	2			
35	90109–12M37	BOLT	2	2	2			
36	90185–12M12	NUT, SELF–LOCKING	2	2	2			
37	663–44575–00	DAMPER, LOWER MOUNT RUBBER	2	2	2			
38	6E5–44511–00–5B	COVER, UPPER MOUNT	1	1	1			
39	97095–10045	BOLT	3	3	3			
40	92995–10100	WASHER	3	3	3			

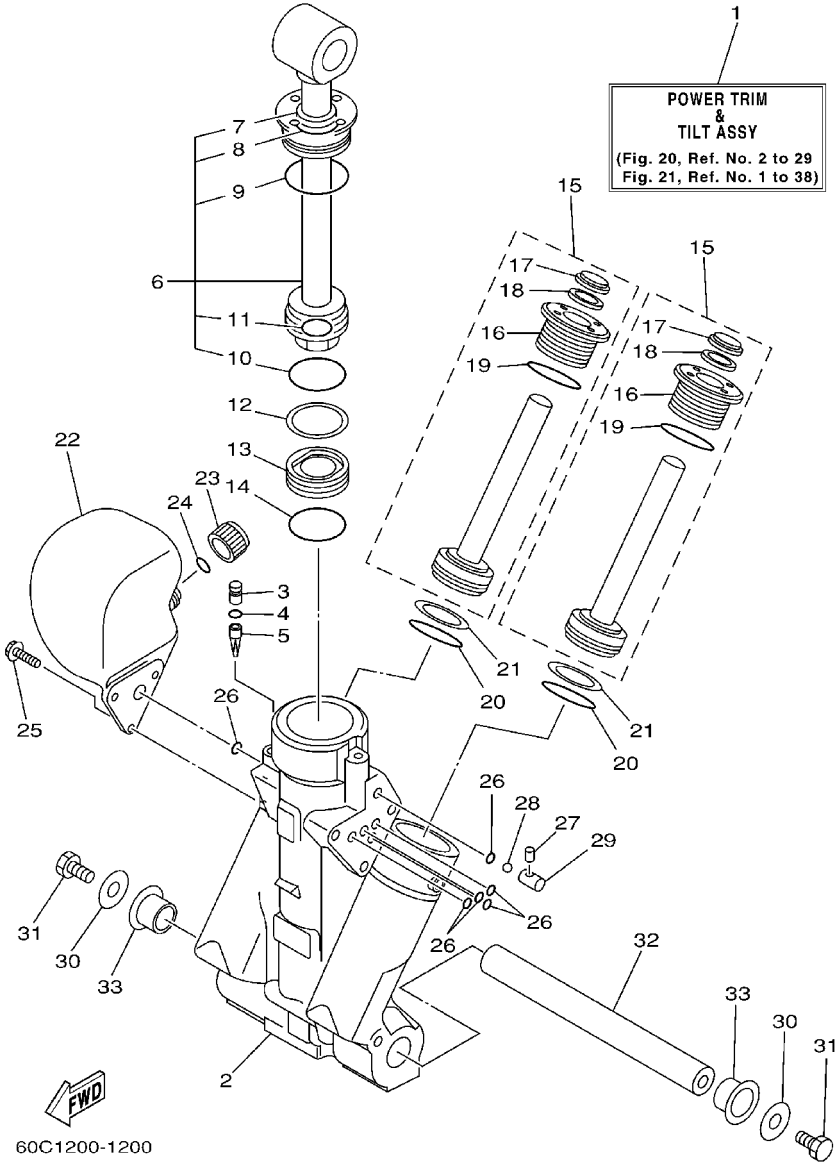

FIG. 20 POWER TRIM & TILT ASSY 1

REF. NO.	PART NO.	DESCRIPTION	115	130	L130			REMARKS
1	64E–43800–02–4D	POWER TRIM & TILT ASSY	1	1	1			
2	64E–43825–01	HOUSING, TRIM & TILT	1	1	1			
3	64E–4388J–00	PLUG 2	1	1	1			
4	93210–10M74	O–RING	1	1	1			
5	64E–43817–00	FILTER 2	1	1	1			
6	64E–43810–00	TILT PISTON SUB ASSY	1	1	1			
7	64E–43898–00	.SEAL ,DUST 2	1	1	1			
8	64E–43867–00	.O–RING	1	1	1			
9	64E–43866–00	.O–RING	1	1	1			
10	6E5–43862–00	.O–RING	1	1	1			
11	64E–43883–00	.O–RING	1	1	1			
12	6E5–43872–00	RING, BACK UP	1	1	1			
13	6E5–43814–02	PISTON, FREE	1	1	1			
14	6E5–43862–00	O–RING	1	1	1			
15	64E–43820–00	TRIM PISTON SUB ASSY	2	2	2			
16	64E–43821–00	.SCREW, TRIM CYLINDER END	1	1	1			
17	64E–43822–00	.SEAL, TRIM DUST	1	1	1			
18	64E–4384J–00	.SEAL, TRIM DOWN	1	1	1			
19	6G5–43864–00	.O–RING	1	1	1			
20	6E5–43864–00	O–RING	2	2	2			
21	6E5–43874–01	RING, BACK UP	2	2	2			
22	64E–43828–00	BODY, RESERVOIR	1	1	1			
23	64E–43829–00	PLUG, RESERVOIR	1	1	1			
24	64E–43897–00	O–RING	1	1	1			
25	64E–4388E–00	BOLT ,SCREW (L:14MM)	3	3	3			
26	64E–43869–00	O–RING	6	6	6			
27	64E–4381G–00	PIN	1	1	1			

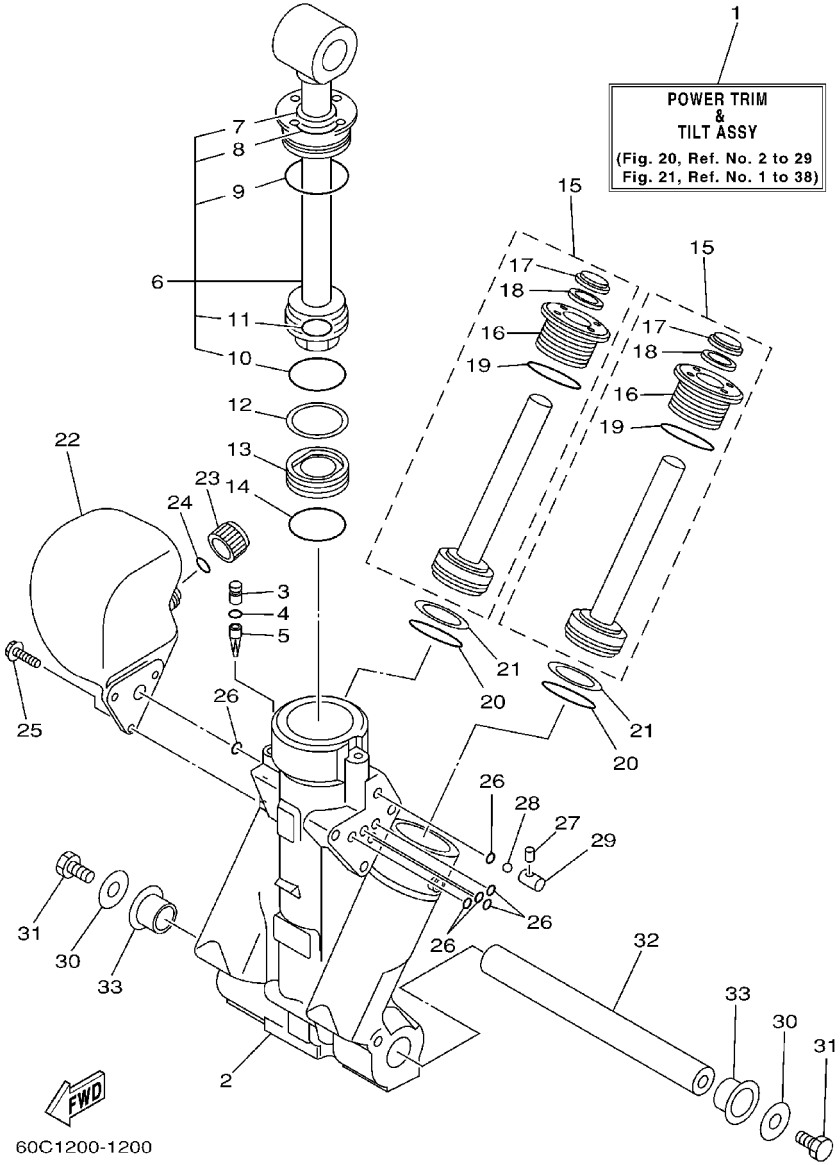

FIG. 20 POWER TRIM & TILT ASSY 1

REF. NO.	PART NO.	DESCRIPTION	115	130	L130			REMARKS
28	6E5-43858-00	BALL	1	1	1			
29	64E-4382G-00	VALVE, SEAT	1	1	1			
30	90201-08M14	WASHER, PLATE	2	2	2			
31	97080-08016	BOLT	2	2	2			
32	64E-43818-01	PIN, LOWER SHOCK MOUNT	1	1	1			
33	90386-22M98	BUSH	2	2	2			

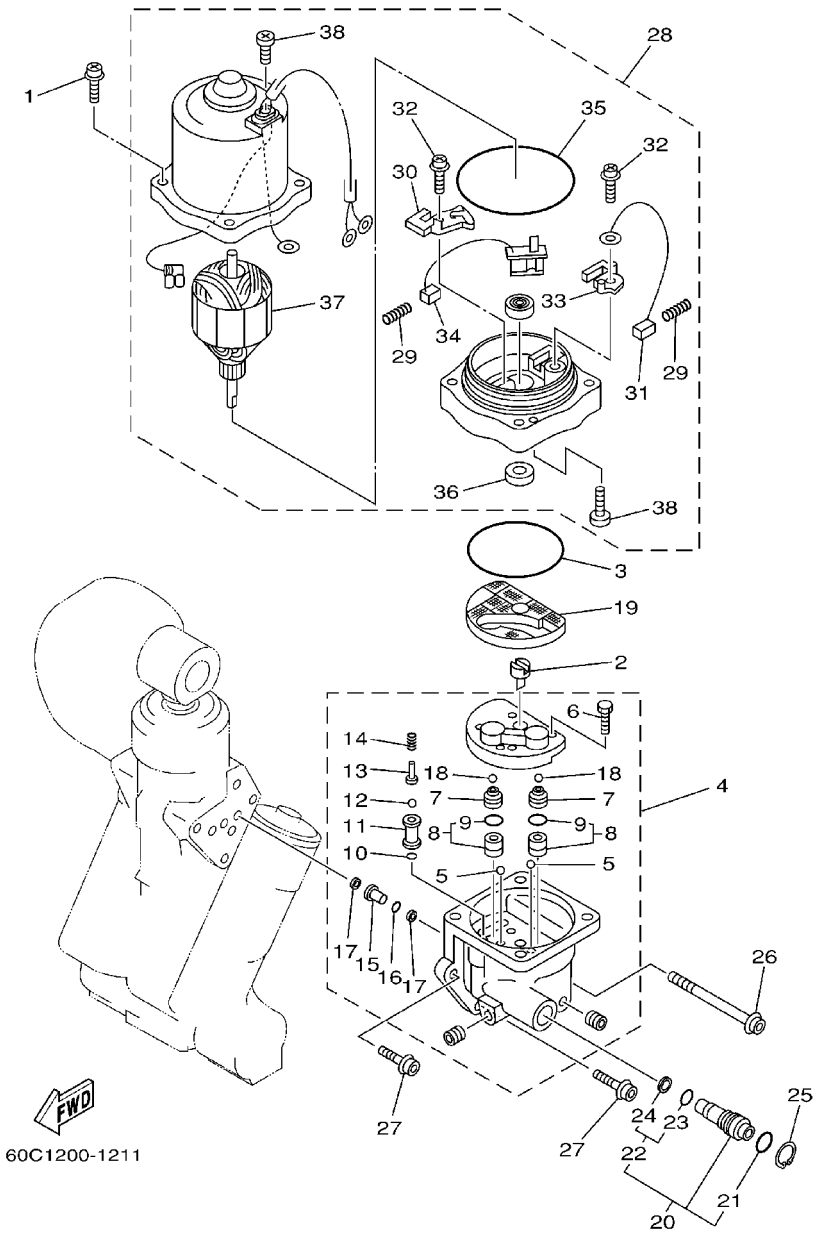

FIG. 21 POWER TRIM & TILT ASSY 2

REF. NO.	PART NO.	DESCRIPTION	115	130	L130			REMARKS
1	64E–4388E–10	BOLT ,SCREW (L:34.7MM)	4	4	4			
2	64E–43831–00	CONNECTOR, SHAFT	1	1	1			
3	64E–43868–00	O–RING	1	1	1			
4	64E–43830–00	GEAR PUMP ASSY	1	1	1			
5	72X–43858–00	.BALL	2	2	2			
6	64E–43843–00	.SCREW, VALVE LOCK	4	4	4			
7	64E–43841–00	.PISTON, SHUTTLE	2	2	2			
8	64E–43802–00	.VALVE SUB ASSY	2	2	2			
9	6E5–43896–00	..O–RING	1	1	1			
10	6G5–43863–00	.O–RING	1	1	1			
11	64E–43851–00	.SEAT, RELIEF VALVE	1	1	1			
12	64E–43858–00	.BALL	1	1	1			
13	64E–43859–00	.PIN, VALVE SUPPORT	1	1	1			
14	64E–43855–00	.SPRING, UP RELIEF	1	1	1			
15	64E–43850–00	.VALVE SUB ASSY	1	1	1			
16	64E–43865–00	.O–RING	1	1	1			
17	64E–43816–00	.FILTER 1	2	2	2			
18	64E–43858–00	.BALL	2	2	2			
19	64E–43817–10	FILTER 2	1	1	1			
20	64E–43860–00	MANUAL VALVE SUB–ASSY	1	1	1			
21	72X–85075–L0	.O–RING	1	1	1			
22	64E–43827–00	.RING SET	1	1	1			
23	64E–4387A–00	..O–RING	1	1	1			
24	64E–43873–00	..RING, BACK UP	1	1	1			
25	64E–43875–00	RING, SNAP	1	1	1			
26	64E–43879–10	SCREW, WITH WASHER	1	1	1			
27	64E–43879–00	SCREW, WITH WASHER	2	2	2			

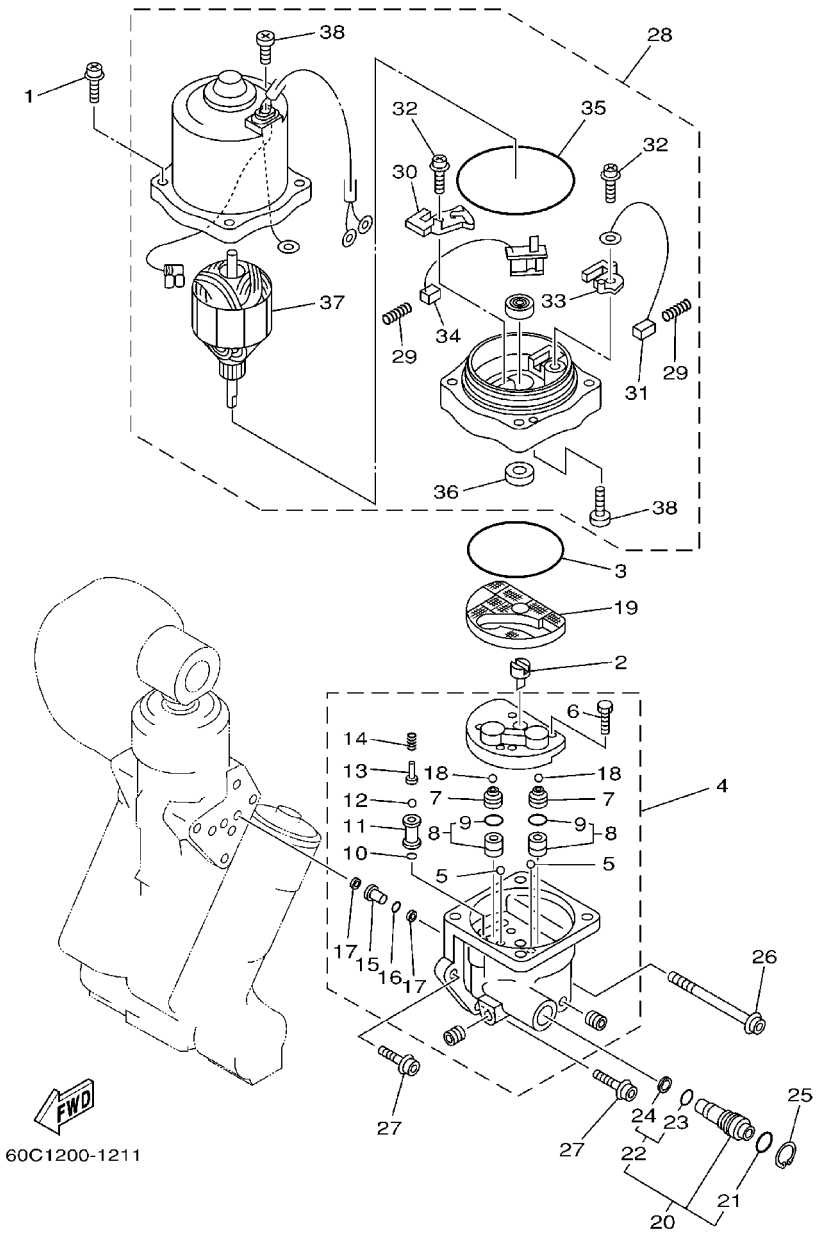

FIG. 21 POWER TRIM & TILT ASSY 2

REF. NO.	PART NO.	DESCRIPTION	115	130	L130			REMARKS
28	64E–43880–01	MOTOR ASSY	1	1	1			
29	6H1–4386K–10	.SPRING, BRUSH	2	2	2			
30	64E–4380J–00	.HOLDER, BRUSH	1	1	1			
31	64E–43891–00	.BRUSH 1	1	1	1			
32	97607–04310	.SCREW, PAN HEAD WITH WASHER	2	2	2			
33	64E–4380F–00	.HOLDER, BRUSH 2	1	1	1			
34	64E–43892–00	.BRUSH 2	1	1	1			
35	6G5–43865–00	.O–RING	1	1	1			
36	93102–08M43	.OIL SEAL	1	1	1			
37	64E–43805–00	.ARMATURE ASSY	1	1	1			
38	64E–43843–10	.SCREW, VALVE LOCK	3	3	3			

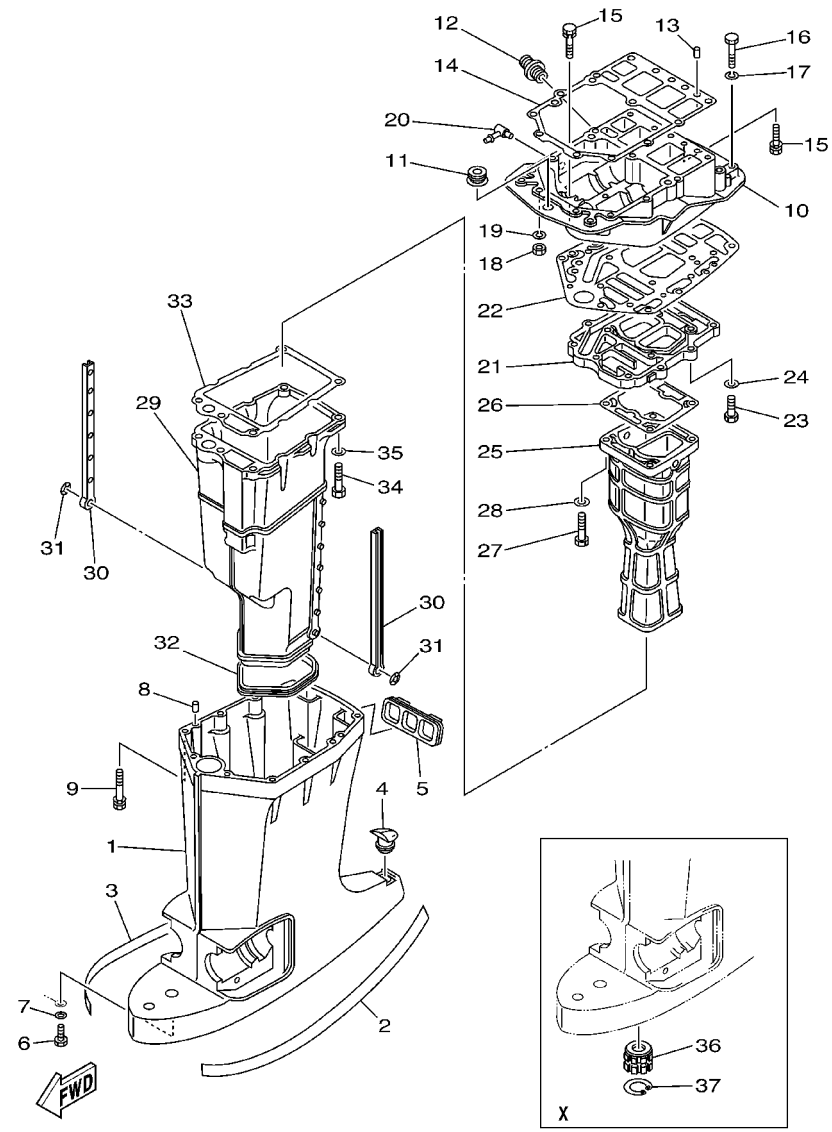

FIG. 22 UPPER CASING

REF. NO.	PART NO.	DESCRIPTION	115	130	L130			REMARKS
1	6E5–45111–02–8D	CASING, UPPER	1	1				L
	6E5–45111–23–8D	CASING, UPPER	1	1	1			X
2	6R3–42791–41	MARK 1	1	1	1			
3	6R3–42792–41	MARK	1	1	1			
4	6E5–45155–00	CAP	1	1	1			
5	6E5–42769–00	SEAL, RUBBER	1	1	1			
6	97095–06010	BOLT	1	1	1			
7	92995–06600	WASHER	1	1	1			
8	93608–12M05	PIN, DOWEL	2	2	2			
9	90119–08027	BOLT, WITH WASHER	6	6	6			
10	6G5–41137–11–94	GUIDE, EXHAUST	1	1	1			FLUSHING KIT
	6G5–41137–02–94	GUIDE, EXHAUST	1	1				FOR STD
11	6E5–42724–00	GROMMET	1	1	1			
12	6G5–12581–00	JOINT, HOSE 1	1	1	1			
13	93608–12M05	PIN, DOWEL	2	2	2			
14	6G5–45113–A1	GASKET, UPPER CASING	1	1	1			
15	90119–08M79	BOLT, WITH WASHER	6	6	6			
16	97095–08045	BOLT	2	2	2			
17	92995–08100	WASHER	2	2	2			
18	95380–08700	NUT	2	2	2			
19	92995–08100	WASHER	2	2	2			
20	6H1–11372–00	NIPPLE, HOSE	1	1	1			FLUSHING KIT
21	6G5–41131–01–5B	MANIFOLD, EXT. 1	1	1	1			
22	6G5–45114–A1	GASKET, UPPER CASING	1	1	1			
23	97095–08030	BOLT	4	4	4			
24	92995–08600	WASHER	4	4	4			
25	6E5–41132–10–5B	MANIFOLD, EXHAUST	1					

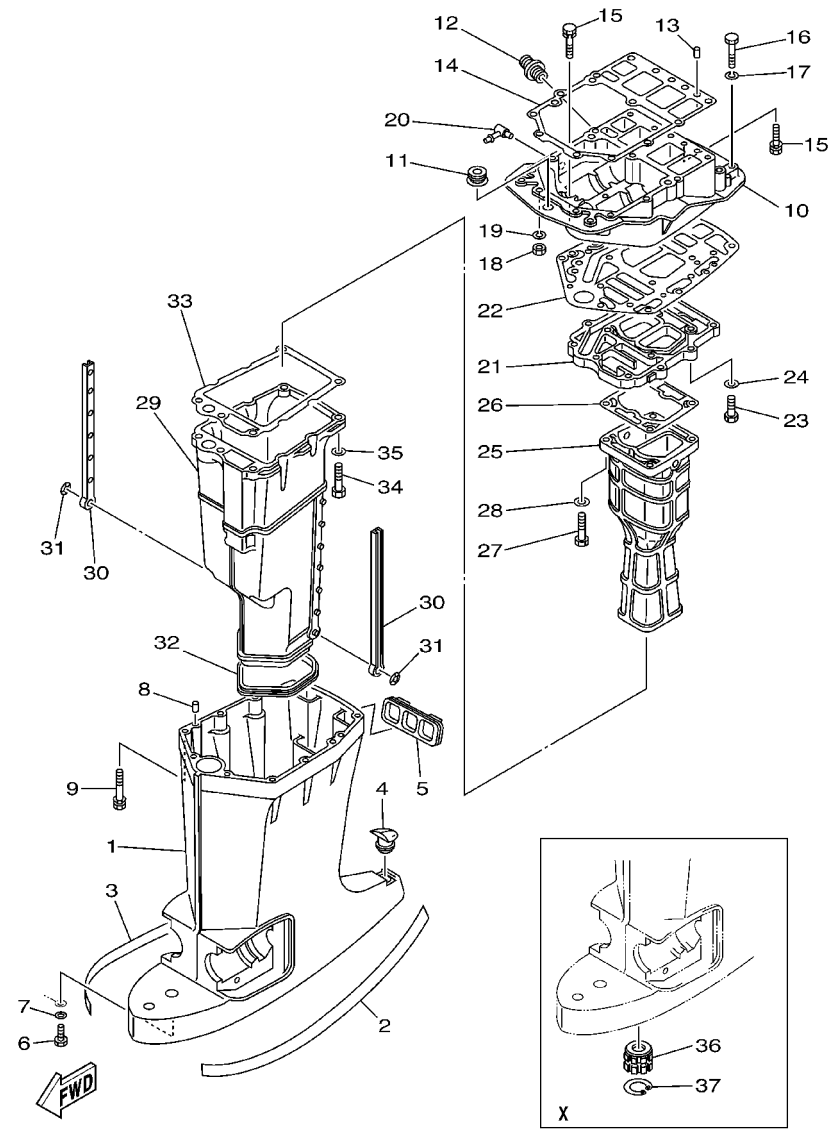

FIG. 22 UPPER CASING

REF. NO.	PART NO.	DESCRIPTION	115	130	L130			REMARKS
25	6L1–41132–00–5B	MANIFOLD, EXHAUST		1	1			
26	6E5–41134–A0	GASKET, EXHAUST MANIFOLD	1					
	6G5–41134–A1	GASKET, EXHAUST MANIFOLD		1	1			
27	97095–08045	BOLT	4	4	4			
28	92995–08600	WASHER	4	4	4			
29	6E5–14711–01–5B	MUFFLER 1	1	1	1			
30	6E5–14737–00	DAMPER, MUFFLER	2	2	2			
31	90183–05M02	NUT, SPRING	2	2	2			
32	6E5–45123–00	GASKET, MUFFLER	1	1	1			
33	6E5–41135–A0	GASKET, EXHAUST MANIFOLD	1	1	1			
34	97095–08045	BOLT	5	5	5			
35	92995–08600	WASHER	5	5	5			
36	6E5–45318–00	BUSHING, DRIVE SHAFT	1	1	1			X
37	93420–36M01	CIRCLIP	1	1	1			X

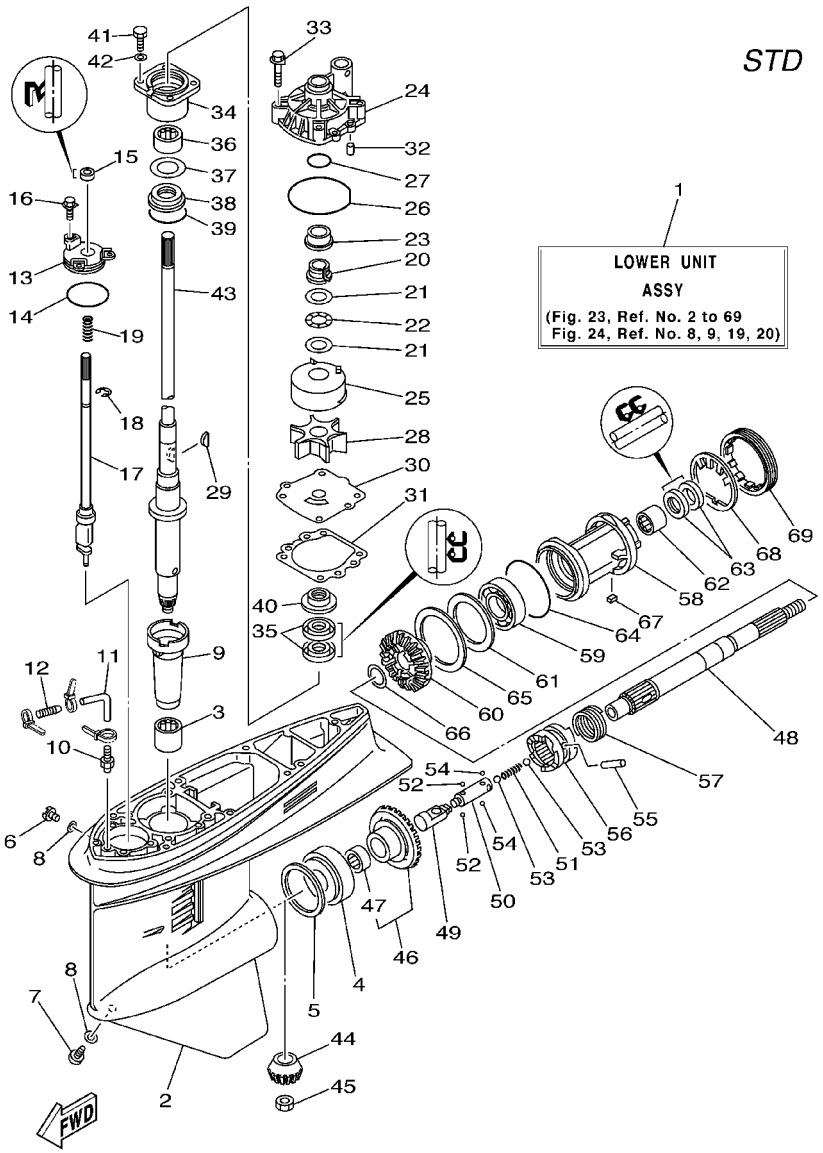

FIG. 23 LOWER CASING. DRIVE 1

REF. NO.	PART NO.	DESCRIPTION	115	130	L130			REMARKS
1	6E5–45300–17–8D	LOWER UNIT ASSY	1	1				L
	6E5–45300–27–8D	LOWER UNIT ASSY	1	1				X
2	6E5–45301–05–8D	CASING, LOWER	1	1				
3	93315–628U9	BEARING	1	1				
4	93332–000U7	BEARING	1	1				
5	6E5–45567–01–10	SHIM (T:0.10MM)	1	1				UR
	6E5–45567–01–12	SHIM (T:0.12MM)	1	1				UR
	6E5–45567–01–15	SHIM (T:0.15MM)	1	1				UR
	6E5–45567–01–18	SHIM (T:0.18MM)	1	1				UR
	6E5–45567–01–30	SHIM (T:0.30MM)	1	1				UR
	6E5–45567–01–40	SHIM (T:0.40MM)	1	1				UR
	6E5–45567–01–50	SHIM (T:0.50MM)	1	1				UR
6	90340–08002	PLUG, STRAIGHT SCREW	1	1				
7	688–45341–10	PLUG, DRAIN	1	1				
8	90430–08020	GASKET	2	2				
9	6E5–45536–00	SLEEVE, DRIVE SHAFT	1	1				
10	6E5–45378–00	NIPPLE, HOSE	1	1				
11	90445–07ME8	HOSE (L80)	1	1				L
	90445–07ME9	HOSE (L120)	1	1				X
12	6E5–83558–10	END, NIPPLE	1	1				
13	6E5–45321–00	PLATE	1	1				
14	93210–58144	O–RING	1	1				
15	93106–09014	OIL SEAL	1	1				
16	90119–06M10	BOLT, WITH WASHER	3	3				
17	6E5–44150–02	SHIFT CAM ASSY	1	1				
18	99001–08600	CIRCLIP	1	1				
19	90501–11M10	SPRING, COMPRESSION	1	1				

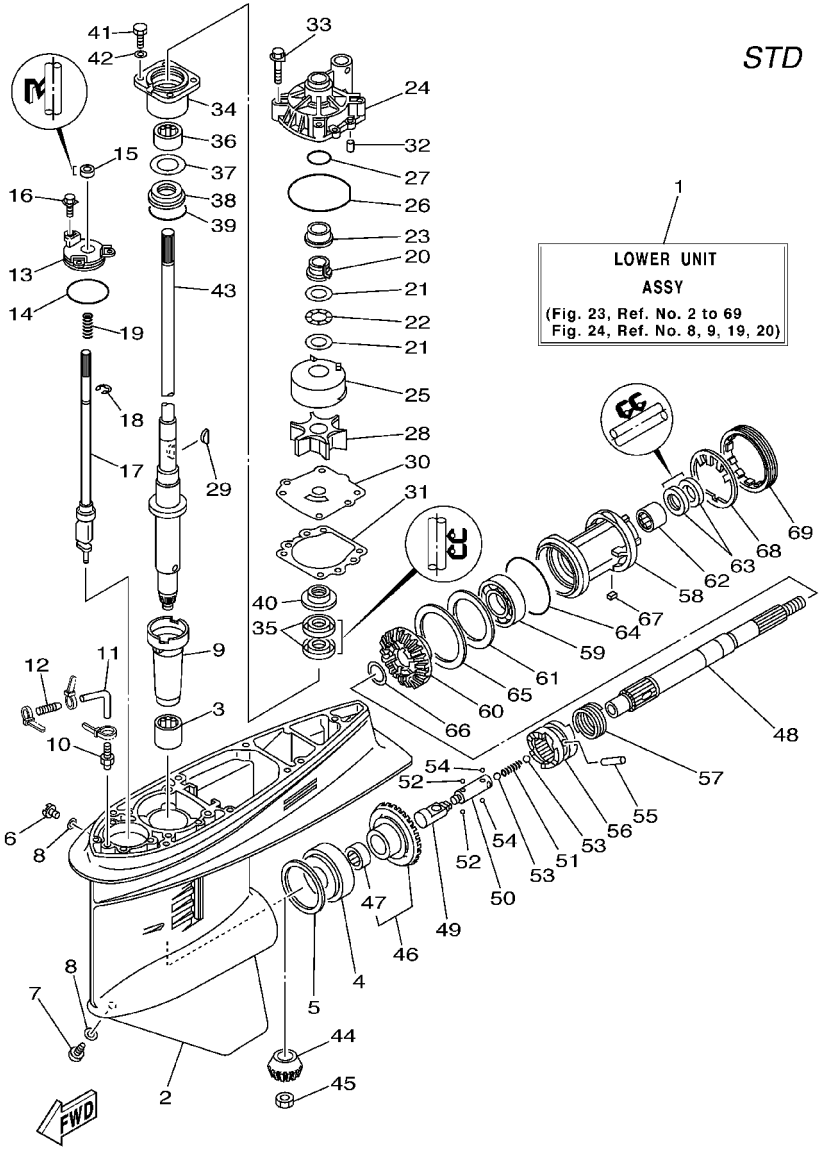

FIG. 23 LOWER CASING. DRIVE 1

REF. NO.	PART NO.	DESCRIPTION	115	130	L130			REMARKS
20	61A–45538–00	SPACER 1	1	1				
21	90201–22M01	WASHER, PLATE	2	2				
22	90206–22M19	WASHER, WAVE	1	1				
23	61A–45527–00	COLLAR, DRIVE SHAFT	1	1				
24	61A–44311–01	HOUSING, WATER PUMP	1	1				
25	61A–44322–02	INSERT, CARTRIDGE	1	1				
26	93210–86M38	O–RING	1	1				
27	93210–37160	O–RING	1	1				
28	6E5–44352–01	IMPELLER	1	1				
29	90280–04M05	KEY, WOODRUFF	1	1				
30	6E5–44323–00	OUTER PLATE, CARTRIDGE	1	1				
31	6E5–44315–A0	GASKET, WATER PUMP	1	1				
32	93606–12019	PIN, DOWEL	2	2				
33	90119–08M14	BOLT, WITH WASHER	4	4				
34	6E5–45331–00–94	HOUSING, BEARING	1	1				
35	93101–28M16	OIL SEAL	2	2				
36	93317–330U2	BEARING	1	1				
37	6E5–45587–01–10	SHIM (T:0.10MM)	1	1				UR
	6E5–45587–01–12	SHIM (T:0.12MM)	1	1				UR
	6E5–45587–01–15	SHIM (T:0.15MM)	1	1				UR
	6E5–45587–01–18	SHIM (T:0.18MM)	1	1				UR
	6E5–45587–01–30	SHIM (T:0.30MM)	1	1				UR
	6E5–45587–01–40	SHIM (T:0.40MM)	1	1				UR
	6E5–45587–01–50	SHIM (T:0.50MM)	1	1				UR
38	93341–930V2	BEARING	1	1				
39	93210–55M14	O–RING	1	1				
40	6E5–45344–00	COVER, OIL SEAL	1	1				

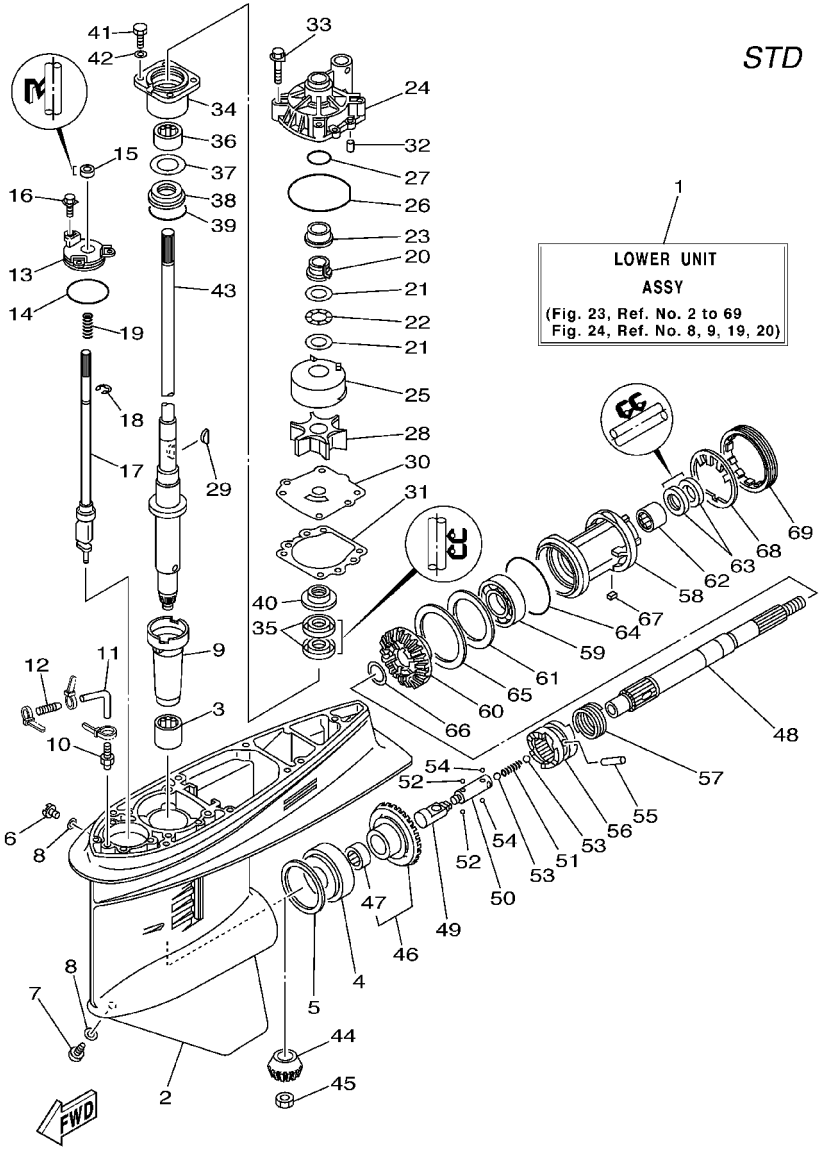

FIG. 23 LOWER CASING. DRIVE 1

REF. NO.	PART NO.	DESCRIPTION	115	130	L130			REMARKS
41	97095–08025	BOLT	4	4				
42	92995–08600	WASHER	4	4				
43	6E5–45501–01	DRIVE SHAFT COMP.	1	1				L
	6E5–45501–21	DRIVE SHAFT COMP.	1	1				X
44	6E5–45551–02	PINION	1	1				
45	90170–16M01	NUT	1	1				
46	6E5–45560–01	GEAR	1	1				
47	93315–425U7	.BEARING	1	1				
48	6E5–45611–01	SHAFT, PROPELLER	1	1				
49	6E5–45641–02	SHIFTER	1	1				
50	6E5–45634–01	SLIDE, SHIFT	1	1				
51	90501–16M37	SPRING, COMPRESSION	1	1				
52	93507–32009	BALL	2	2				
53	93511–32017	BALL	2	2				
54	93503–16003	BALL	2	2				
55	90250–08M07	PIN, STRAIGHT	1	1				
56	6E5–45631–01	CLUTCH, DOG	1	1				
57	6E5–45633–01	RING, CROSS PIN	1	1				
58	6E5–45332–00–94	HOUSING, BEARING	1	1				
59	93306–208U0	BEARING	1	1				
60	6E5–45571–01	GEAR	1	1				
61	6E5–45576–00	WASHER, THRUST	1	1				
62	93315–430U8	BEARING	1	1				
63	93101–30M17	OIL SEAL	2	2				
64	93210–86M39	O–RING	1	1				
65	6L6–45577–00–10	SHIM (T:0.10MM)	1	1				UR
	6L6–45577–00–12	SHIM (T:0.12MM)	1	1				UR

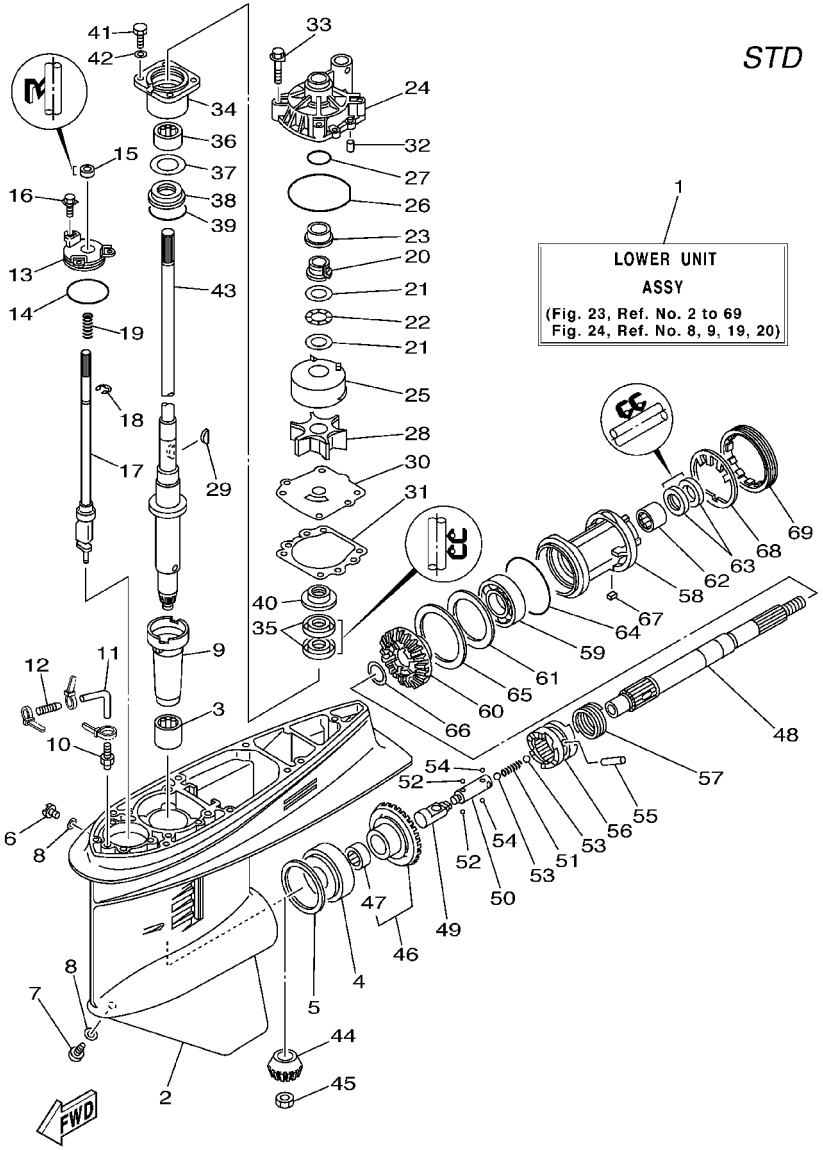

FIG. 23 LOWER CASING. DRIVE 1

REF. NO.	PART NO.	DESCRIPTION	115	130	L130			REMARKS
65	6L6–45577–00–15	SHIM (T:0.15MM)	1	1				UR
	6L6–45577–00–18	SHIM (T:0.18MM)	1	1				UR
	6L6–45577–00–30	SHIM (T:0.30MM)	1	1				UR
	6L6–45577–00–40	SHIM (T:0.40MM)	1	1				UR
	6L6–45577–00–50	SHIM (T:0.50MM)	1	1				UR
66	90201–30M92	WASHER, PLATE	1	1				
67	90282–04010	KEY, STRAIGHT	1	1				
68	688–45383–02	WASHER, CLAW	1	1				
69	688–45384–00	NUT	1	1				

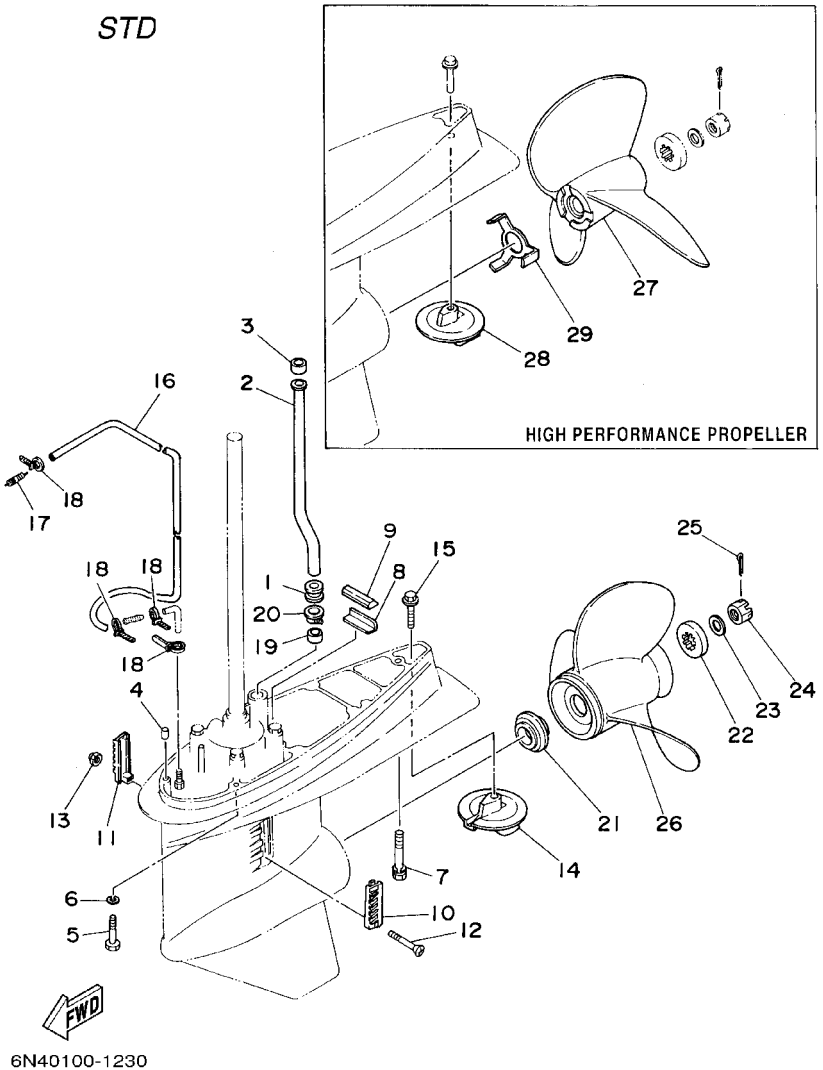

FIG. 24 LOWER CASING. DRIVE 2

REF. NO.	PART NO.	DESCRIPTION	115	130	L130			REMARKS
1	6E5–44366–00	DAMPER, WATER SEAL	1	1				
2	6E5–44361–00	TUBE, WATER	1	1				L
	6E5–44361–20	TUBE, WATER	1	1				X
3	6E5–44365–00	DAMPER, WATER SEAL	1	1				
4	93608–12M05	PIN, DOWEL	2	2				
5	97075–10045	BOLT	6	6				
6	92995–10100	WASHER	6	6				
7	90119–10M89	BOLT, WITH WASHER	1	1				
8	663–45376–00–94	GUIDE, SEAL DAMPER	1	1				
9	688–45375–00	DAMPER, SEAL	1	1				
10	688–45214–02	COVER, WATER INLET	1	1				
11	688–45215–02	COVER, WATER INLET	1	1				
12	90152–05M07	SCREW, COUNTERSUNK	1	1				
13	90185–05002	NUT, SELF–LOCKING	1	1				
14	6E5–45371–01	TAB–TRIM	1	1				
15	90105–10M00	BOLT, FLANGE	1	1				
16	90445–07MF0	HOSE (L1030)	1	1				
17	6E5–83558–00	END, NIPPLE	1	1				
18	90465–11M10	CLAMP	4	4				
19	6E5–44365–00	DAMPER, WATER SEAL	1	1				
20	6E5–44312–00	COVER, WATER PUMP HOUSING	1	1				
21	6E5–45987–01	SPACER	1	1				
22	688–45997–01	SPACER	1	1				
23	92990–18200	WASHER	1	1				
24	90171–18M04	NUT, CASTLE	1	1				
25	91490–40030	PIN, COTTER	1	1				
26	6E5–45941–00–EL	PROPELLER (3X13”X19”–K)	1	1				UR

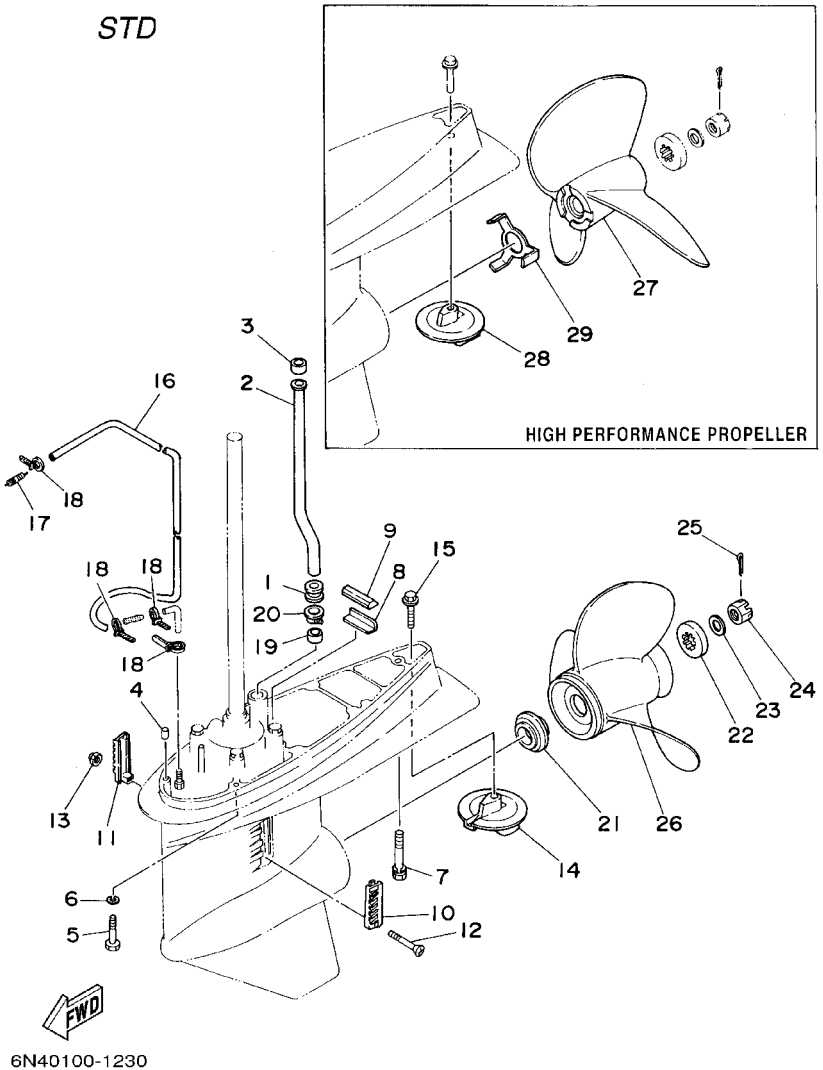

FIG. 24 LOWER CASING. DRIVE 2

REF. NO.	PART NO.	DESCRIPTION	115	130	L130			REMARKS
26	6E5–45943–00–EL	PROPELLER (3X12–5/8”X21”–K)	1	1				UR
	6E5–45945–01–EL	PROPELLER (3X13–1/4”X17”–K)	1	1				UR
	6E5–45947–00–EL	PROPELLER (3X13–1/2”X15”–K)	1	1				UR
	6E5–45949–00–EL	PROPELLER (3X13–5/8”X13”–K)	1	1				UR
	6E5–45952–00–EL	PROPELLER (3X13”X23”–K)	1	1				UR
	6E5–45954–00–EL	PROPELLER (3X14”X11”–K)	1	1				UR
	6E5–45956–00–EL	PROPELLER (3X13”X25”–K)	1	1				UR
		STAINLESS STEEL PROPELLER						
	688–45930–02–98	PROPELLER (3X13”X17”–K)	1	1				UR
	688–45932–60–98	PROPELLER (3X13–1/2”X14”–K)	1	1				UR
	688–45970–03–98	PROPELLER (3X13”X19”–K)	1	1				UR
	688–45972–02–98	PROPELLER (3X13”X21”–K)	1	1				UR
	688–45974–02–98	PROPELLER (3X13”X23”–K)	1	1				UR
	688–45976–01–98	PROPELLER (3X13”X25”–K)	1	1				UR
	688–45978–60–98	PROPELLER (3X13–1/2”X16”–K)	1	1				UR
		HIGH PERFORMANCE PROPELLER						
27	6E5–45970–10	PROPELLER (3X14”X20”–P)	1	1				UR
	6E5–45972–10	PROPELLER (3X14”X24”–P)	1	1				UR
	6E5–45974–10	PROPELLER (3X14”X28”–P)	1	1				UR
	6E5–45976–10	PROPELLER (3X14”X22”–P)	1	1				UR
	6E5–45978–10	PROPELLER (3X14”X26”–P)	1	1				UR
28	6E5–45371–10	TAB–TRIM	1	1				
29	6E5–45994–10	PLATE, TOOTH	1	1				

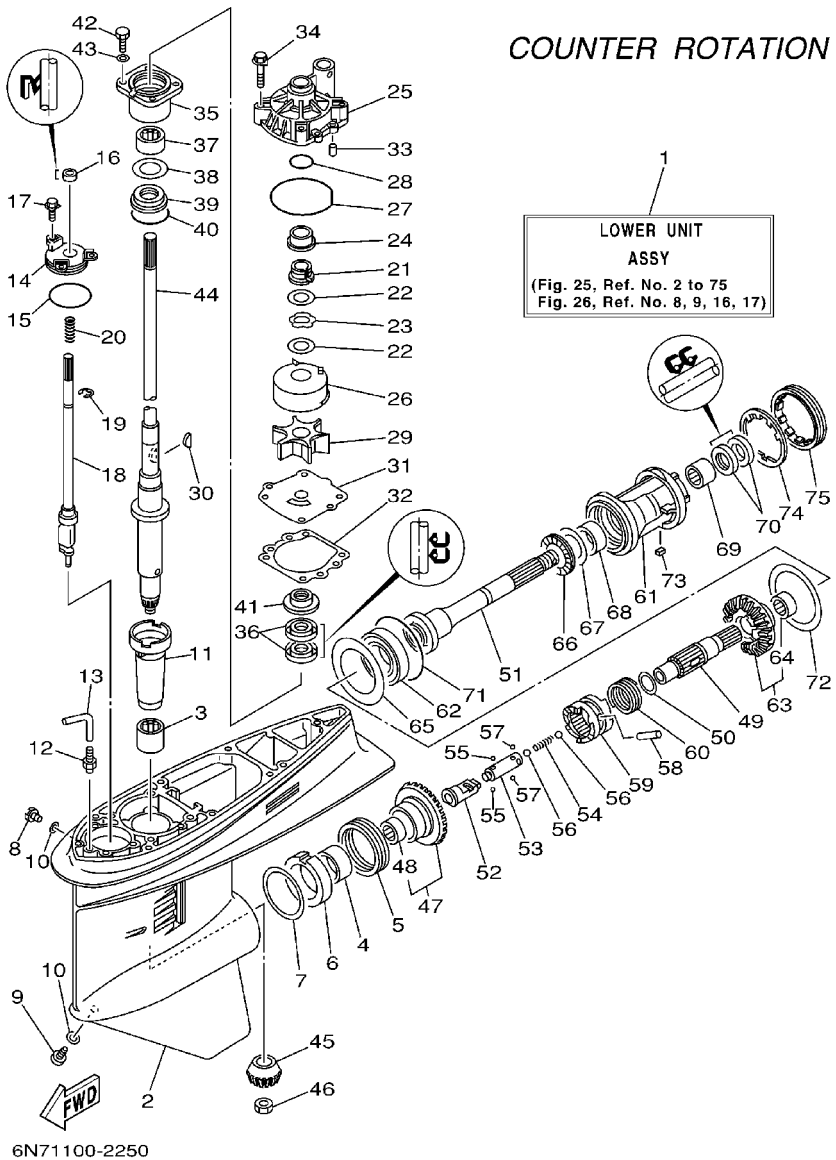

FIG. 25 LOWER CASING. DRIVE 3

REF. NO.	PART NO.	DESCRIPTION	115	130	L130			REMARKS
1	6L6–45300–25–8D	LOWER UNIT ASSY			1			X
2	6E5–45301–05–8D	CASING, LOWER			1			
3	93315–628U9	BEARING			1			
4	93315–345W0	BEARING			1			
5	93341–360U8	BEARING			1			
6	6L6–45538–00	SPACER 1			1			
7	6E5–45567–01–10	SHIM (T:0.10MM)			1			UR
	6E5–45567–01–12	SHIM (T:0.12MM)			1			UR
	6E5–45567–01–15	SHIM (T:0.15MM)			1			UR
	6E5–45567–01–18	SHIM (T:0.18MM)			1			UR
	6E5–45567–01–30	SHIM (T:0.30MM)			1			UR
	6E5–45567–01–40	SHIM (T:0.40MM)			1			UR
	6E5–45567–01–50	SHIM (T:0.50MM)			1			UR
8	90340–08002	PLUG, STRAIGHT SCREW			1			
9	688–45341–10	PLUG, DRAIN			1			
10	90430–08020	GASKET			2			
11	6E5–45536–00	SLEEVE, DRIVE SHAFT			1			
12	6J8–45378–00	NIPPLE, HOSE			1			
13	90445–07ME9	HOSE (L120)			1			X
14	6E5–45321–00	PLATE			1			
15	93210–58144	O–RING			1			
16	93106–09014	OIL SEAL			1			
17	90119–06M10	BOLT, WITH WASHER			3			
18	6L6–44150–01	SHIFT CAM ASSY			1			
19	99001–08600	CIRCLIP			1			
20	90501–11M10	SPRING, COMPRESSION			1			
21	61A–45538–00	SPACER 1			1			

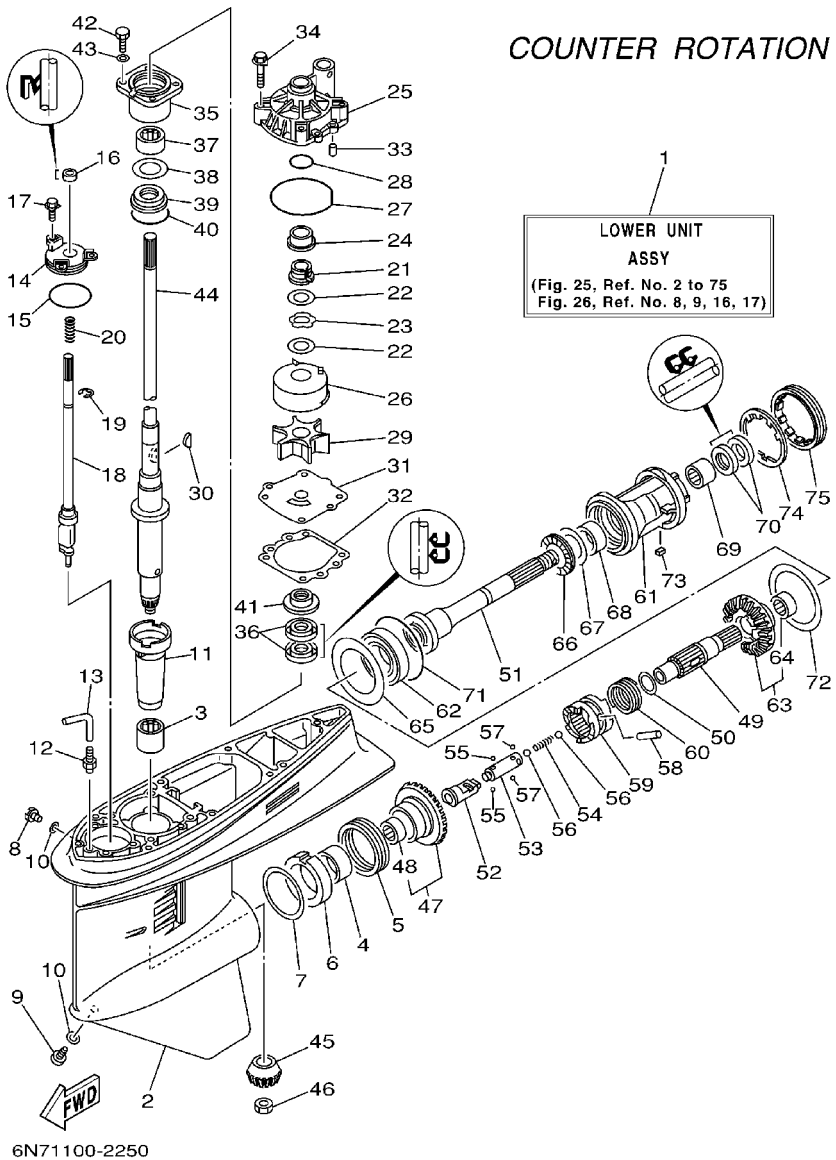

FIG. 25 LOWER CASING. DRIVE 3

REF. NO.	PART NO.	DESCRIPTION	115	130	L130			REMARKS
22	90201–22M01	WASHER, PLATE			2			
23	90206–22M19	WASHER, WAVE			1			
24	61A–45527–00	COLLAR, DRIVE SHAFT			1			
25	61A–44311–01	HOUSING, WATER PUMP			1			
26	61A–44322–02	INSERT, CARTRIDGE			1			
27	93210–86M38	O–RING			1			
28	93210–37160	O–RING			1			
29	6E5–44352–01	IMPELLER			1			
30	90280–04M05	KEY, WOODRUFF			1			
31	6E5–44323–00	OUTER PLATE, CARTRIDGE			1			
32	6E5–44315–A0	GASKET, WATER PUMP			1			
33	93606–12019	PIN, DOWEL			2			
34	90119–08M14	BOLT, WITH WASHER			4			
35	6E5–45331–00–94	HOUSING, BEARING			1			
36	93101–28M16	OIL SEAL			2			
37	93317–330U2	BEARING			1			
38	6E5–45587–01–10	SHIM (T:0.10MM)			1			UR
	6E5–45587–01–12	SHIM (T:0.12MM)			1			UR
	6E5–45587–01–15	SHIM (T:0.15MM)			1			UR
	6E5–45587–01–18	SHIM (T:0.18MM)			1			UR
	6E5–45587–01–30	SHIM (T:0.30MM)			1			UR
	6E5–45587–01–40	SHIM (T:0.40MM)			1			UR
	6E5–45587–01–50	SHIM (T:0.50MM)			1			UR
39	93341–930V2	BEARING			1			
40	93210–55M14	O–RING			1			
41	6E5–45344–00	COVER, OIL SEAL			1			
42	97095–08025	BOLT			4			

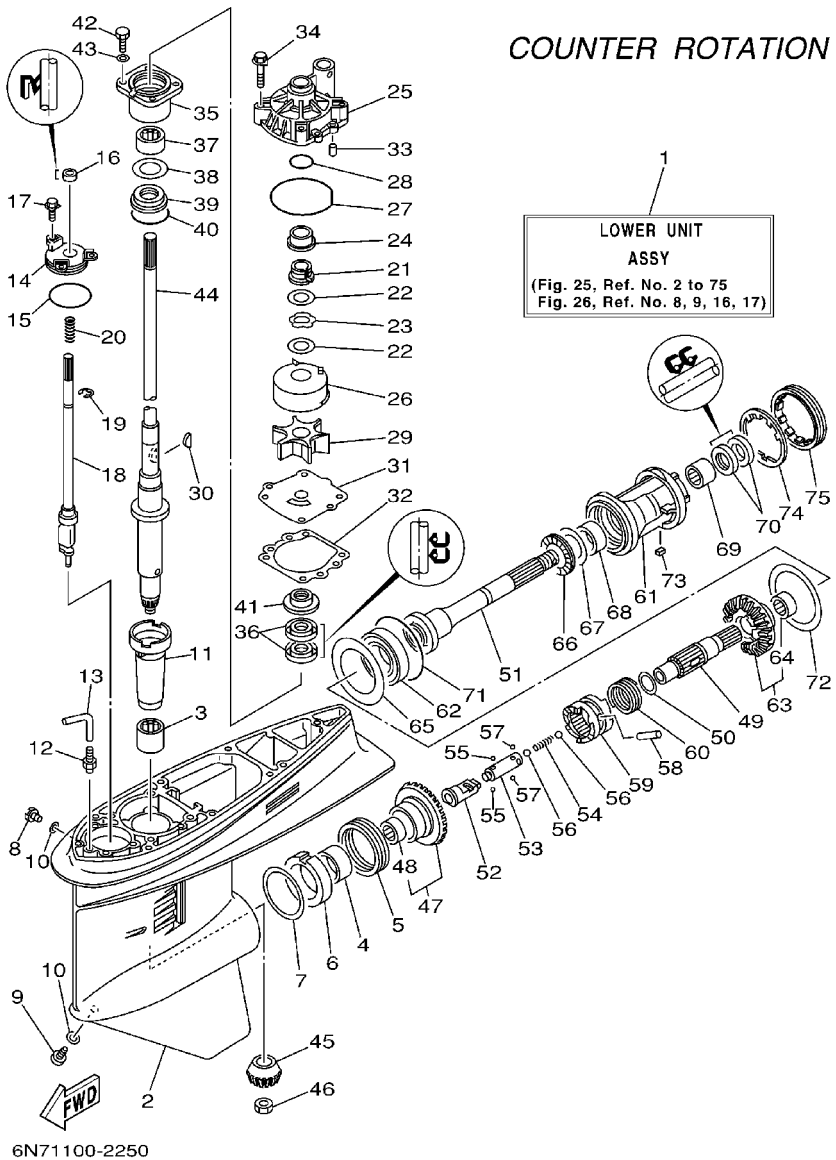

FIG. 25 LOWER CASING. DRIVE 3

REF. NO.	PART NO.	DESCRIPTION	115	130	L130			REMARKS
43	92995-08600	WASHER			4			
44	6E5-45501-21	DRIVE SHAFT COMP.			1			X
45	6E5-45551-02	PINION			1			
46	90170-16M01	NUT			1			
47	6L6-45560-00	GEAR			1			
48	93315-425U7	.BEARING			1			
49	6K1-45611-00	SHAFT, PROPELLER			1			
50	90201-26M00	WASHER, PLATE			1			
51	6L6-45611-20	SHAFT, PROPELLER			1			
52	6K1-45641-01	SHIFTER			1			
53	6E5-45634-01	SLIDE, SHIFT			1			
54	90501-16M37	SPRING, COMPRESSION			1			
55	93507-32009	BALL			2			
56	93511-32017	BALL			2			
57	93503-16003	BALL			2			
58	90250-08M07	PIN, STRAIGHT			1			
59	6E5-45631-01	CLUTCH, DOG			1			
60	6E5-45633-01	RING, CROSS PIN			1			
61	6L6-45332-00-94	HOUSING, BEARING			1			
62	93332-000V7	BEARING			1			
63	6L6-45570-00	GEAR			1			
64	93315-430V5	.BEARING			1			
65	6L6-45576-00	WASHER, THRUST			1			
66	93341-440U5	BEARING			1			
67	6K1-45578-01-10	SHIM (T:0.10MM)			1			UR
	6K1-45578-01-12	SHIM (T:0.12MM)			1			UR
	6K1-45578-01-15	SHIM (T:0.15MM)			1			UR

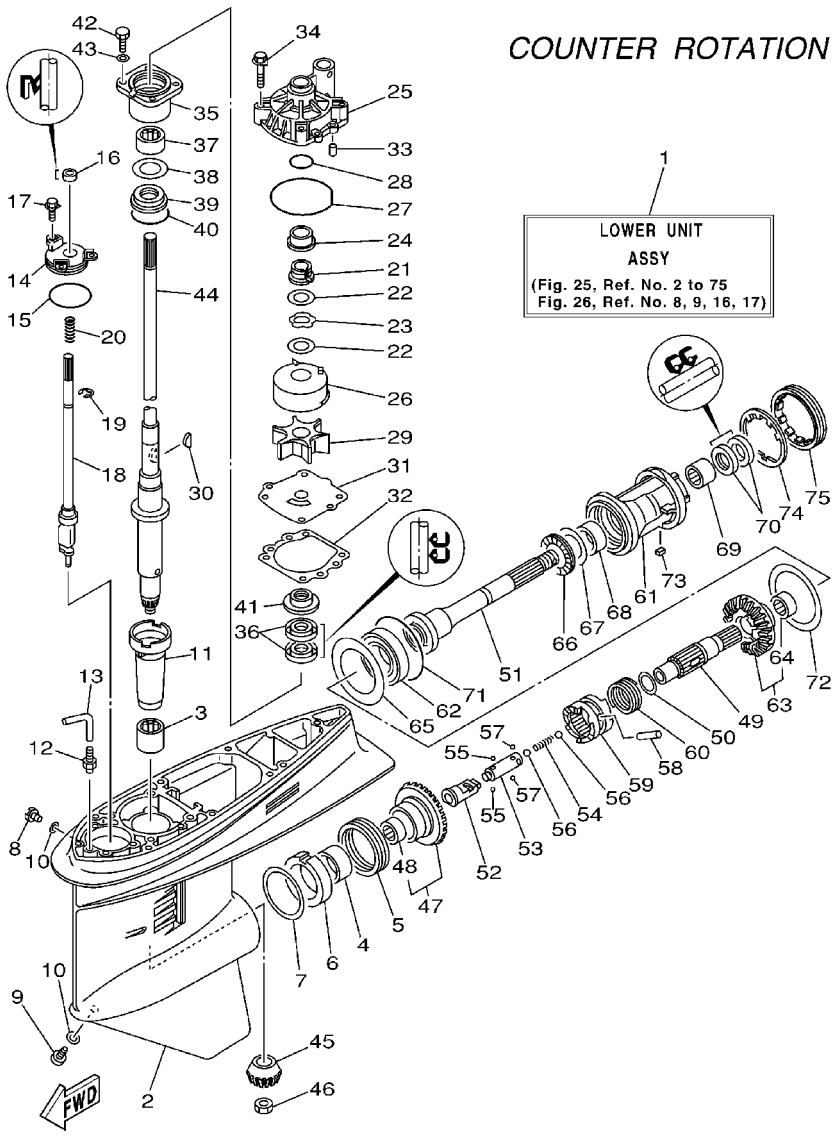

FIG. 25 LOWER CASING. DRIVE 3

REF. NO.	PART NO.	DESCRIPTION	115	130	L130			REMARKS
67	6K1–45578–01–18	SHIM (T:0.18MM)			1			UR
	6K1–45578–01–30	SHIM (T:0.30MM)			1			UR
	6K1–45578–01–40	SHIM (T:0.40MM)			1			UR
	6K1–45578–01–50	SHIM (T:0.50MM)			1			UR
68	93315–440V6	BEARING			1			
69	93317–330U5	BEARING			1			
70	93101–30M17	OIL SEAL			2			
71	93210–86M39	O–RING			1			
72	6L6–45577–00–10	SHIM (T:0.10MM)			1			UR
	6L6–45577–00–12	SHIM (T:0.12MM)			1			UR
	6L6–45577–00–15	SHIM (T:0.15MM)			1			UR
	6L6–45577–00–18	SHIM (T:0.18MM)			1			UR
	6L6–45577–00–30	SHIM (T:0.30MM)			1			UR
	6L6–45577–00–40	SHIM (T:0.40MM)			1			UR
	6L6–45577–00–50	SHIM (T:0.50MM)			1			UR
73	90282–04010	KEY, STRAIGHT			1			
74	688–45383–02	WASHER, CLAW			1			
75	688–45384–00	NUT			1			

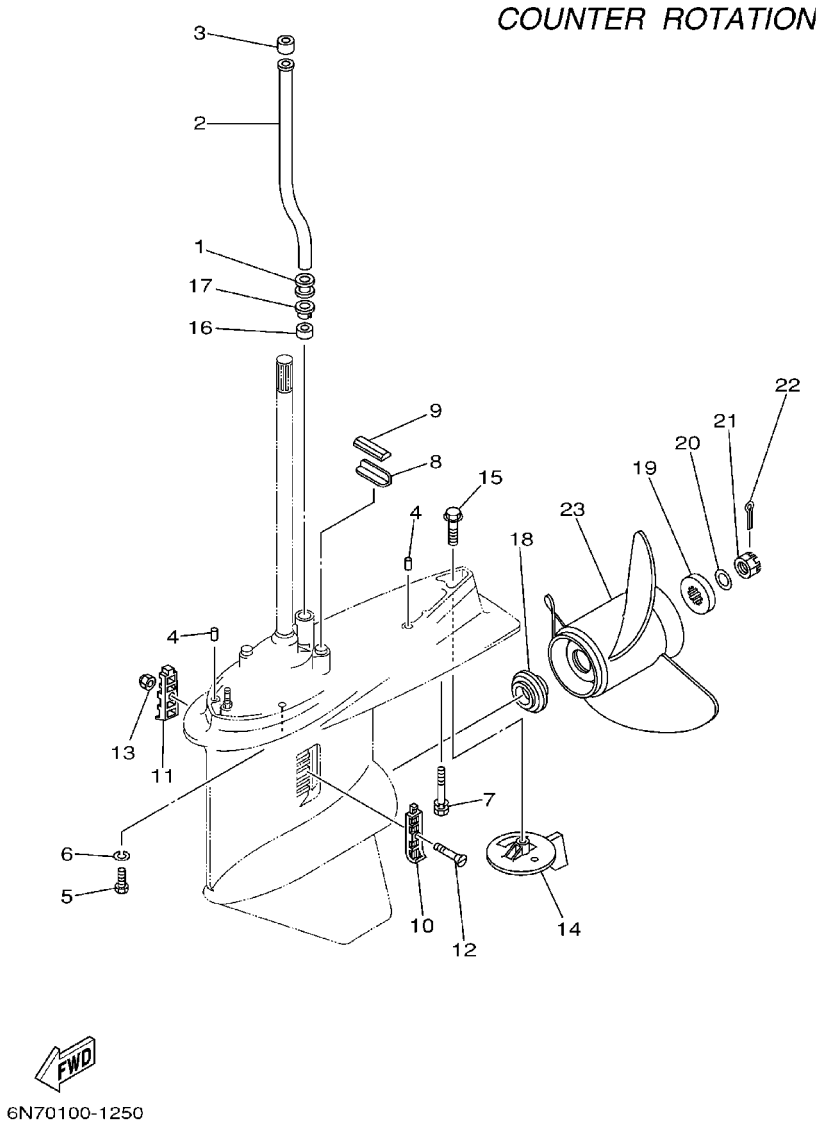

FIG. 26 LOWER CASING. DRIVE 4

REF. NO.	PART NO.	DESCRIPTION	115	130	L130			REMARKS
1	6E5–44366–00	DAMPER, WATER SEAL			1			
2	6E5–44361–20	TUBE, WATER			1			X
3	6E5–44365–00	DAMPER, WATER SEAL			1			
4	93608–12M05	PIN, DOWEL			2			
5	97075–10045	BOLT			6			
6	92995–10100	WASHER			6			
7	90119–10M89	BOLT, WITH WASHER			1			
8	663–45376–00–94	GUIDE, SEAL DAMPER			1			
9	688–45375–00	DAMPER, SEAL			1			
10	688–45214–02	COVER, WATER INLET			1			
11	688–45215–02	COVER, WATER INLET			1			
12	90152–05M07	SCREW, COUNTERSUNK			1			
13	90185–05002	NUT, SELF–LOCKING			1			
14	6L6–45371–00	TAB–TRIM			1			
15	90105–10M00	BOLT, FLANGE			1			
16	6E5–44365–00	DAMPER, WATER SEAL			1			
17	6E5–44312–00	COVER, WATER PUMP HOUSING			1			
18	6E5–45987–01	SPACER			1			
19	688–45997–01	SPACER			1			
20	92990–18200	WASHER			1			
21	90171–18M04	NUT, CASTLE			1			
22	91490–40030	PIN, COTTER			1			
23	6L6–45930–01–98	PROPELLER (3X13”X17”–KL)			1			UR
	6L6–45970–00–98	PROPELLER (3X13”X19”–KL)			1			UR
	6L6–45972–00–98	PROPELLER (3X13”X21”–KL)			1			UR

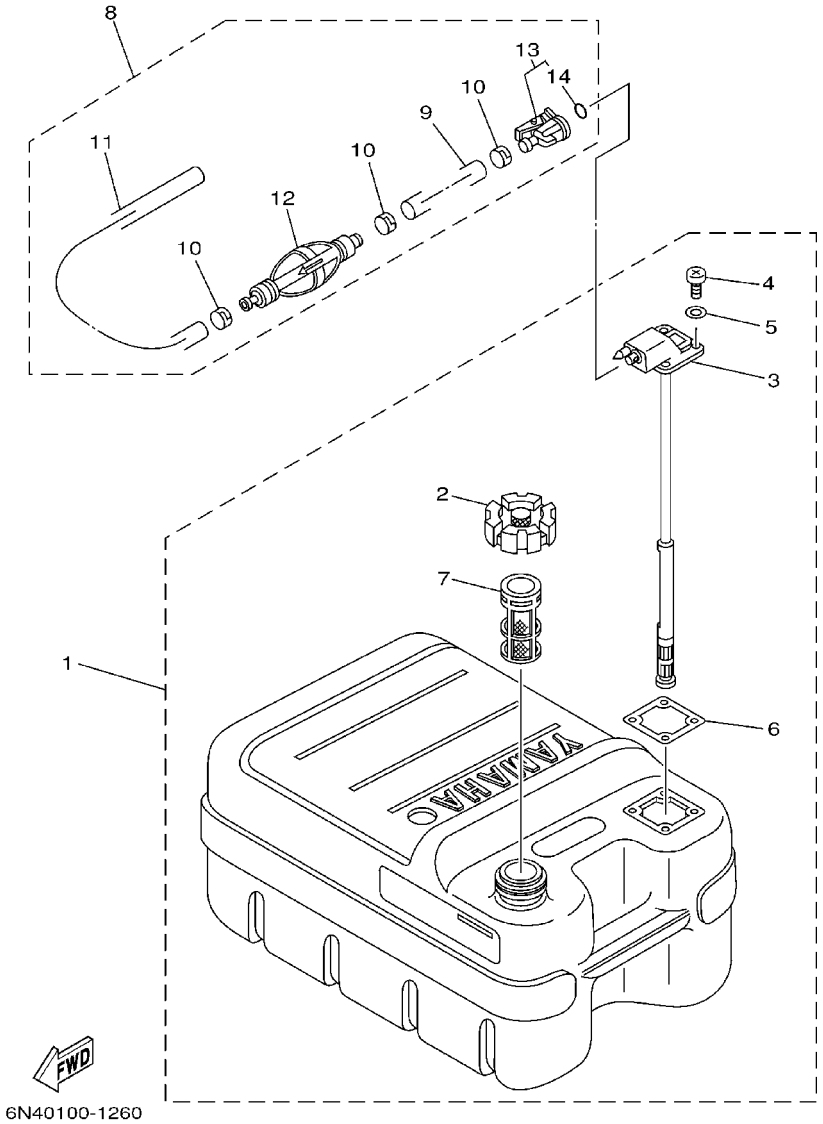

FIG. 27 FUEL TANK

REF. NO.	PART NO.	DESCRIPTION	115	130	L130			REMARKS
1	6YJ–24201–10	FUEL TANK ASSY (24L)	1	1				AP FOR CARIB WITH INDICATOR
2	6YJ–24610–01	.CAP ASSY	1	1				
3	6Y1–24260–12	.FUEL METER ASSY	1	1				WITH INDICATOR
4	98586–05016	.SCREW, PAN HEAD	4	4				
5	6Y1–24329–00	.SEAL	4	4				
6	6Y1–24268–00	.GASKET, FUEL METER	1	1				
7	6YJ–24167–00	.STRAINER	1	1				
8	6Y2–24306–42	FUEL PIPE COMP. 1	1	1				AP FOR CARIB
9	90445–13M01	.HOSE (L2050)	1	1				
10	6E5–24351–51	.BAND 1	3	3				
11	90445–13M35	.HOSE (L:250)	1	1				
12	6Y2–24360–52	.PRIMER PUMP ASSY	1	1				
13	6Y2–24305–04	.FUEL PIPE JOINT COMP. 2	1	1				
14	93210–08287	..O–RING	1	1				

FIG. 28 STEERING GUIDE ATTACHMENT 1

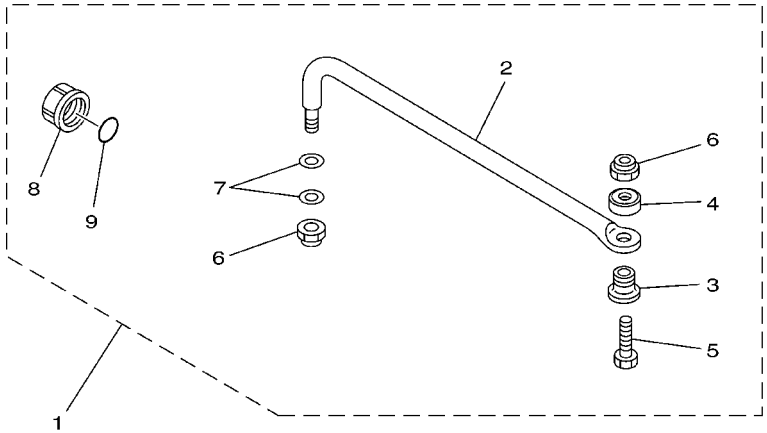

67H0100-9290

REF. NO.	PART NO.	DESCRIPTION	115	130	L130			REMARKS
1	6E5–61350–02	STEERING GUIDE ATTACHMENT KIT	1	1	1			AP "L130"–FOR OCEANIA
2	6E5–61351–01	.ROD, STEERING LINK	1	1	1			
3	90387–10M61	.COLLAR	1	1	1			
4	90560–12M01	.SPACER	1	1	1			
5	6E5–61355–00	.BOLT	1	1	1			
6	90185–09M01	.NUT, SELF–LOCKING	2	2	2			
7	90201–10M20	.WASHER, PLATE	2	2	2			
8	6E5–43145–01	.CAP, CLAMP BRACKET	1	1	1			
9	93210–16275	.O–RING	1	1	1			

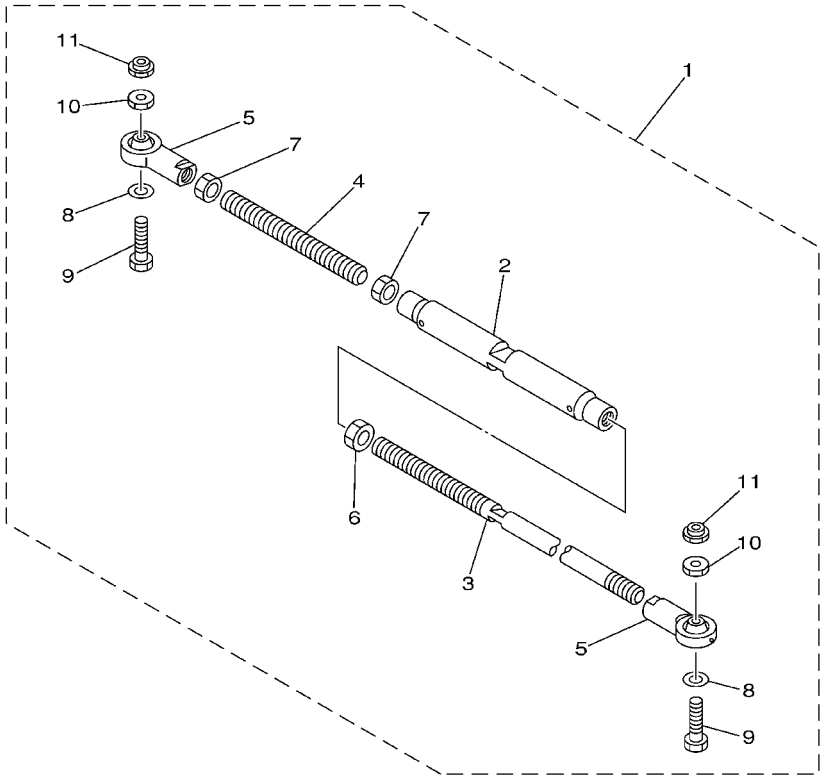

67H0100-0300

FIG. 29 STEERING GUIDE ATTACHMENT 2

REF. NO.	PART NO.	DESCRIPTION	115	130	L130			REMARKS
1	6E5–61301–01	TWIN KIT (L:600–800MM)			1			AP
2	6E5–61313–00	.ADJUSTER			1			
3	6E5–61311–11	.TIE BAR			1			
4	6E5–61315–00	.TIE BAR			1			
5	6E5–61303–00	.STEERING EYE COMP.			2			
6	90170–14M06	.NUT			1			
7	95380–14700	.NUT			2			
8	90201–10M76	.WASHER, PLATE			2			
9	90101–09M70	.BOLT			2			
10	90170–09M05	.NUT			2			
11	90185–09M01	.NUT, SELF–LOCKING			2			

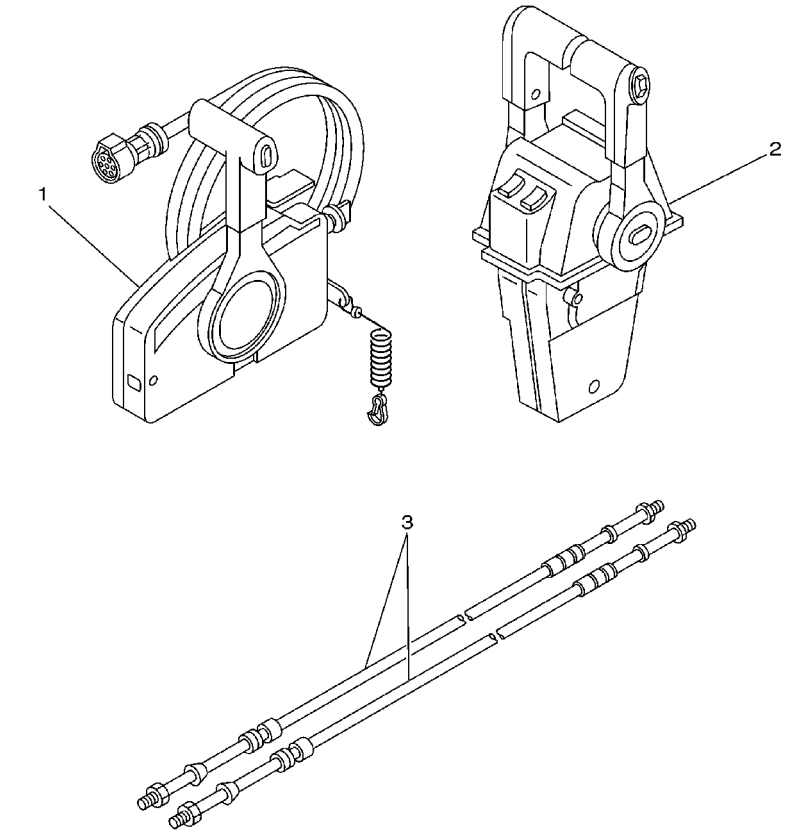

FIG. 30 REMOTE CONTROL BOX

REF. NO.	PART NO.	DESCRIPTION	115	130	L130			REMARKS
1	703–48205–17	REMOTE CONTROL ASSY	1	1				AP WITH PT/T SW.
2	704–48207–23	REMOTE CONTROL ASSY			1			AP WITH PT/T SW.
3	701–48320–50	CABLE, REMOTE CONTROL L=15F	2	2	2			UR
	701–48320–60	CABLE, REMOTE CONTROL L=16F	2	2	2			UR
	701–48320–80	CABLE, REMOTE CONTROL L=17F	2	2	2			UR
	701–48350–00	CABLE, REMOTE CONTROL L=21F	2	2	2			UR
	701–48350–20	CABLE, REMOTE CONTROL L=23F	2	2	2			UR

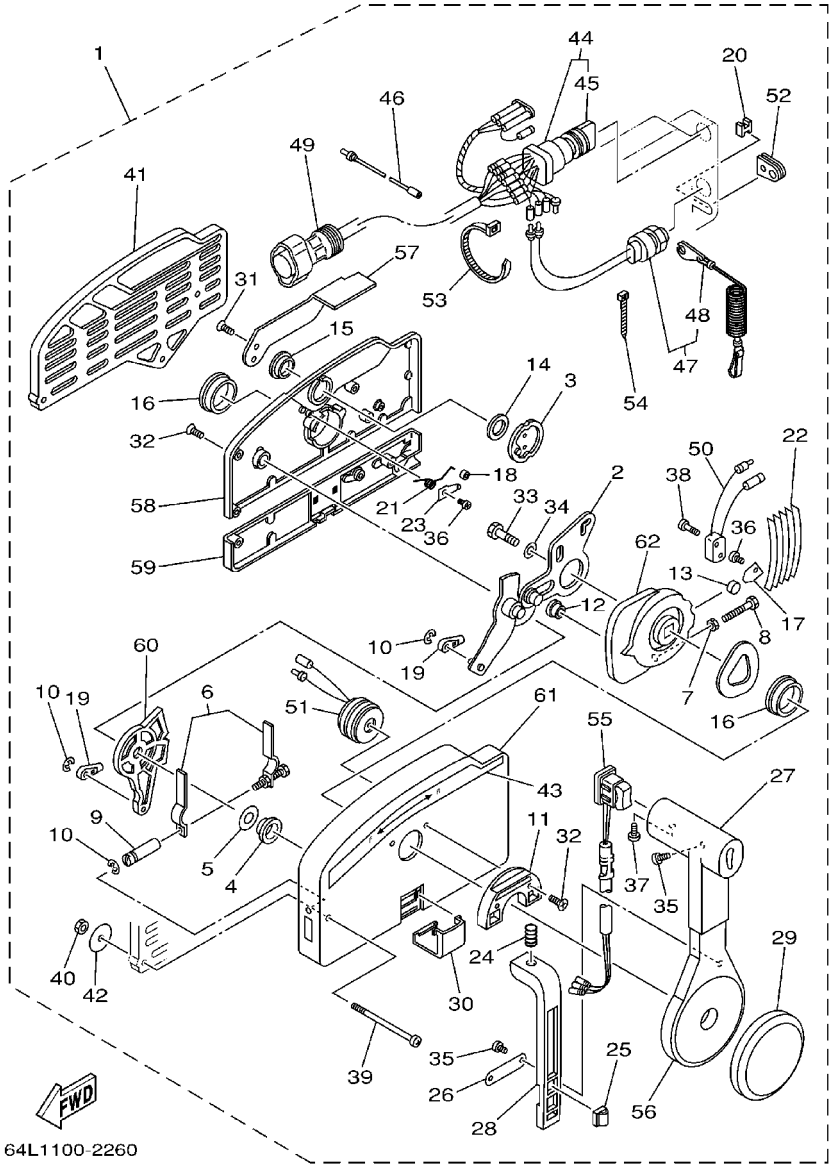

FIG. 31 REMOTE CONTROL ASSY 1

REF. NO.	PART NO.	DESCRIPTION	115	130	L130			REMARKS
1	703–48205–17	REMOTE CONTROL ASSY	1	1				AP WITH PT/T SW.
2	703–48261–01	.ARM, THROTTLE	1	1				
3	703–48153–00	.SHAFT, FREE ACCEL.	1	1				
4	703–48235–00	.BUSHING	1	1				
5	703–48268–00	.SPACER	1	1				
6	703–48264–00	.THROTTLE, FRICTION	1	1				
7	95380–05600	.NUT	1	1				
8	97380–05025	.BOLT	1	1				
9	703–48265–00	.SHAFT, FRICTION	1	1				
10	93430–06024	.CIRCLIP	3	3				
11	703–48245–00	.PLATE, LOCK	1	1				
12	703–48252–00	.ROLLER, CAM	1	1				
13	701–48248–00	.ROLLER, FREE ACCEL.	1	1				
14	703–48198–00	.WASHER, WAVE	1	1				
15	703–48243–00	.BUSHING	1	1				
16	703–48236–00	.BUSHING 1	2	2				
17	703–48189–00	.RETAINER	1	1				
18	703–48234–00	.ROLLER, DETENT	1	1				
19	703–48345–01	.CABLE END, REMOTE CONTROL 2	2	2				
20	703–48358–00	.ANCHOR, CABLE	1	1				
21	703–48244–00	.SPRING, FREE ACCEL.	1	1				
22	703–48238–00	.SPRING, DETENT	5	5				
23	703–48246–00	.SPACER	1	1				
24	703–48227–00	.SPRING, NEUTRAL LOCK	1	1				
25	703–82594–00	.CLAMP	1	1				WITH PT/T SW.
26	703–48226–00	.PLATE, STOPPER	1	1				
27	703–48222–00	.GRIP, CONTROL LEVER	1	1				SINGLE

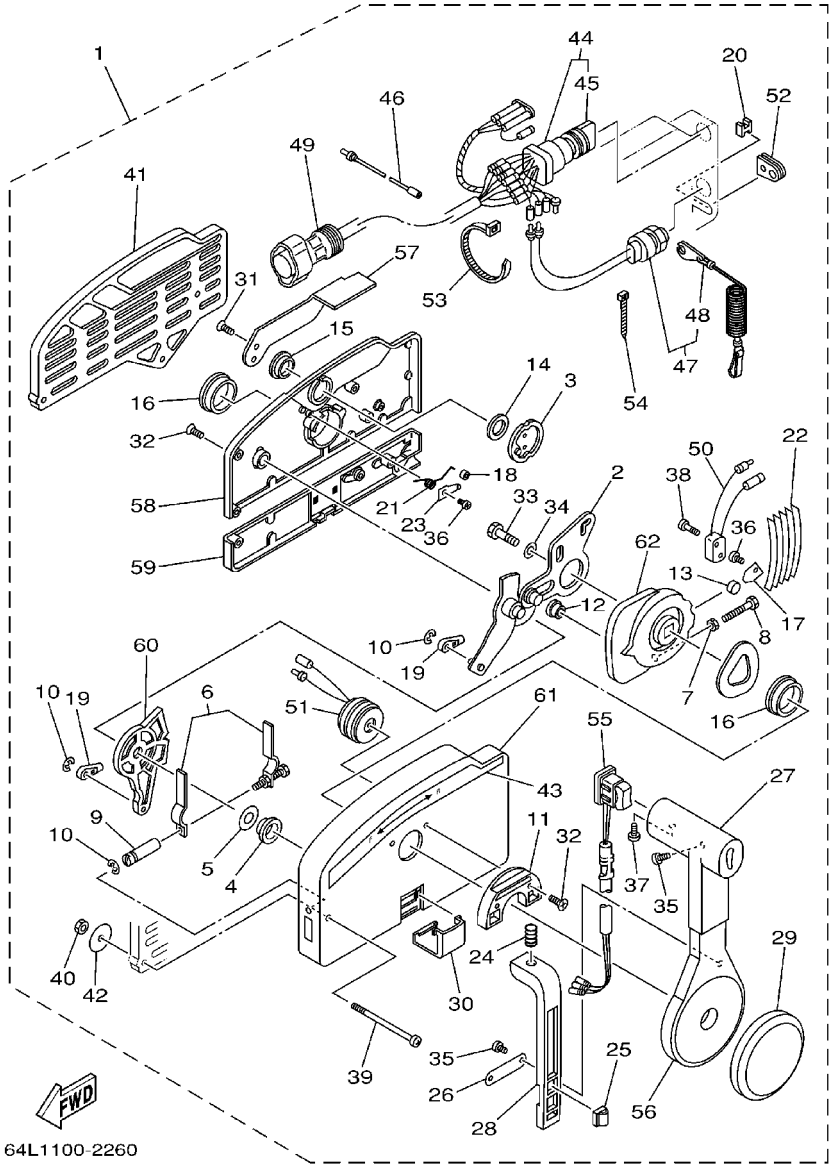

FIG. 31 REMOTE CONTROL ASSY 1

REF. NO.	PART NO.	DESCRIPTION	115	130	L130			REMARKS
28	703–48223–00	.LOCK, NEUTRAL	1	1				
29	703–48225–00	.COVER	1	1				
30	703–48219–00	.COVER, LEAD	1	1				
31	703–48281–00	.SCREW	2	2				
32	703–48282–00	.SCREW	7	7				
33	97380–08030	.BOLT	1	1				
34	92990–08600	.WASHER, PLATE	1	1				
35	98580–04010	.SCREW, PAN HEAD	3	3				
36	98580–04006	.SCREW, PAN HEAD	2	2				
37	98580–05010	.SCREW, PAN HEAD	1	1				
38	98580–03015	.SCREW, PAN HEAD	2	2				
39	703–48291–10	.SCREW (M6)	3	3				
40	95380–06600	.NUT, HEXAGON	3	3				
41	703–48293–10	.SPACER, REMOTE CONTROL	1	1				SINGLE
42	701–48287–00	.WASHER	3	3				
43	703–48215–00	.GRAPHIC	1	1				
44	703–82510–43	.MAIN SWITCH ASSY	1	1				
45	703–82577–00	..CAP, KEY	1	1				
46	703–82531–00	.WIRE, LEAD	1	1				
47	688–82575–01	.ENGINE STOP SWITCH ASSY	1	1				
48	682–82556–00	..STOPPER	1	1				
49	688–8258A–20	.EXTENSION, WIRE HARNESS	1	1				L:5M (10P)
50	703–82540–00	.NEUTRAL SWITCH ASSY	1	1				
51	703–83383–02	.BUZZER	1	1				
52	703–48284–00	.GROMMET	1	1				
53	703–82591–00	.BAND	1	1				
54	703–82592–00	.BAND	1	1				

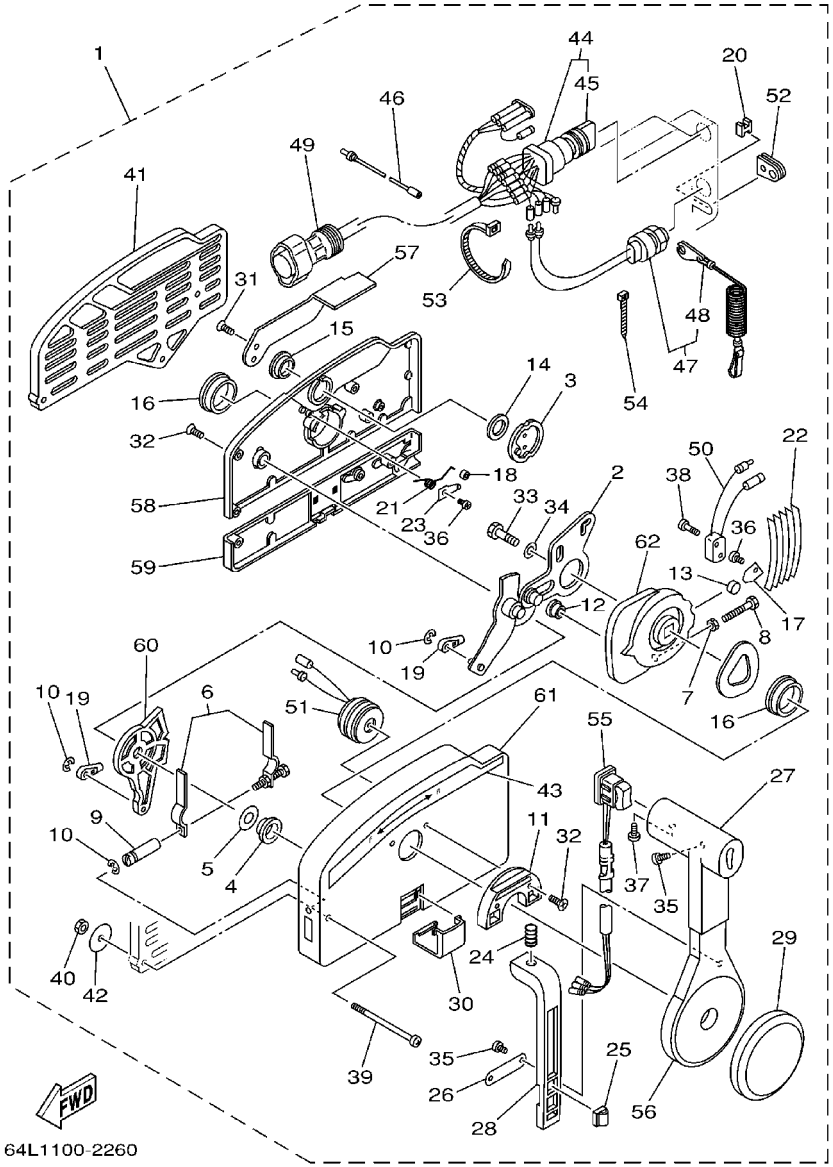

FIG. 31 REMOTE CONTROL ASSY 1

REF. NO.	PART NO.	DESCRIPTION	115	130	L130			REMARKS
55	703–82563–02	.TRIM & TILT SWITCH ASSY	1	1				WITH PT/T SW.
56	703–48221–00	.LEVER, CONTROL	1	1				
57	703–48152–00	.KNOB, FREE ACCEL.	1	1				
58	703–48212–00	.BACK PLATE 1	1	1				
59	703–48213–00	.BACK PLATE 2	1	1				
60	703–48271–00	.ARM, SHIFT	1	1				
61	703–48211–01	.HOUSING,1	1	1				
62	703–48232–00	.GEAR	1	1				

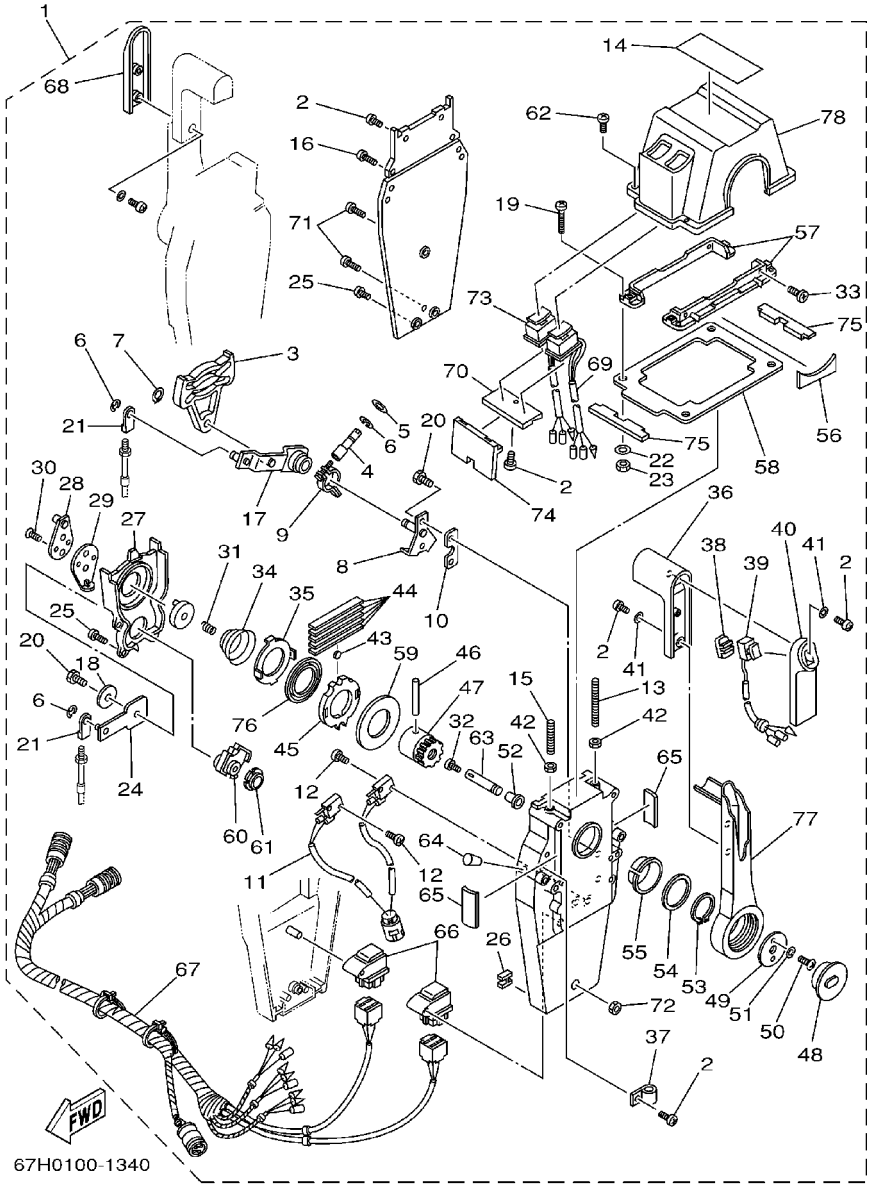

FIG. 32 REMOTE CONTROL ASSY 2

REF. NO.	PART NO.	DESCRIPTION	115	130	L130			REMARKS
1	704–48207–23	REMOTE CONTROL ASSY			1			AP WITH PT/T SW.
2	97890–05016	.SCREW, PAN HEAD			12			
3	EL8–48251–00	.PLATE, CAM			2			
4	704–48265–00	.SHAFT, FRICTION			2			
5	701–48246–00	.SPACER			2			
6	93430–06024	.CIRCLIP			8			
7	EL8–48259–00	.CIRCLIP 1			2			
8	704–48262–00	.SHAFT, THROTTLE			2			
9	704–48264–00	.THROTTLE, FRICTION			2			
10	704–48266–00	.SPACER			2			
11	704–82540–10	.NEUTRAL SWITCH ASSY			1			
12	6A5–48129–10	.SCREW 3			4			
13	EL8–48281–00	.SCREW			2			
14	704–48215–10	.GRAPHIC			1			
15	704–48281–00	.SCREW			2			
16	97890–05025	.SCREW, PAN HEAD			4			
17	704–48261–00	.ARM, THROTTLE			2			
18	EL8–48191–00	.WASHER 1			2			
19	704–48283–00	.SCREW			4			
20	97380–06018	.BOLT			6			
21	703–48345–01	.CABLE END, REMOTE CONTROL 2			4			
22	704–48287–00	.WASHER			4			
23	95380–05600	.NUT			4			
24	EL8–48271–00	.ARM, SHIFT			2			
25	EL8–48127–00	.SCREW 1			16			
26	703–48358–00	.ANCHOR, CABLE			2			
27	EL8–48231–00	.HOUSING, GEAR			2			

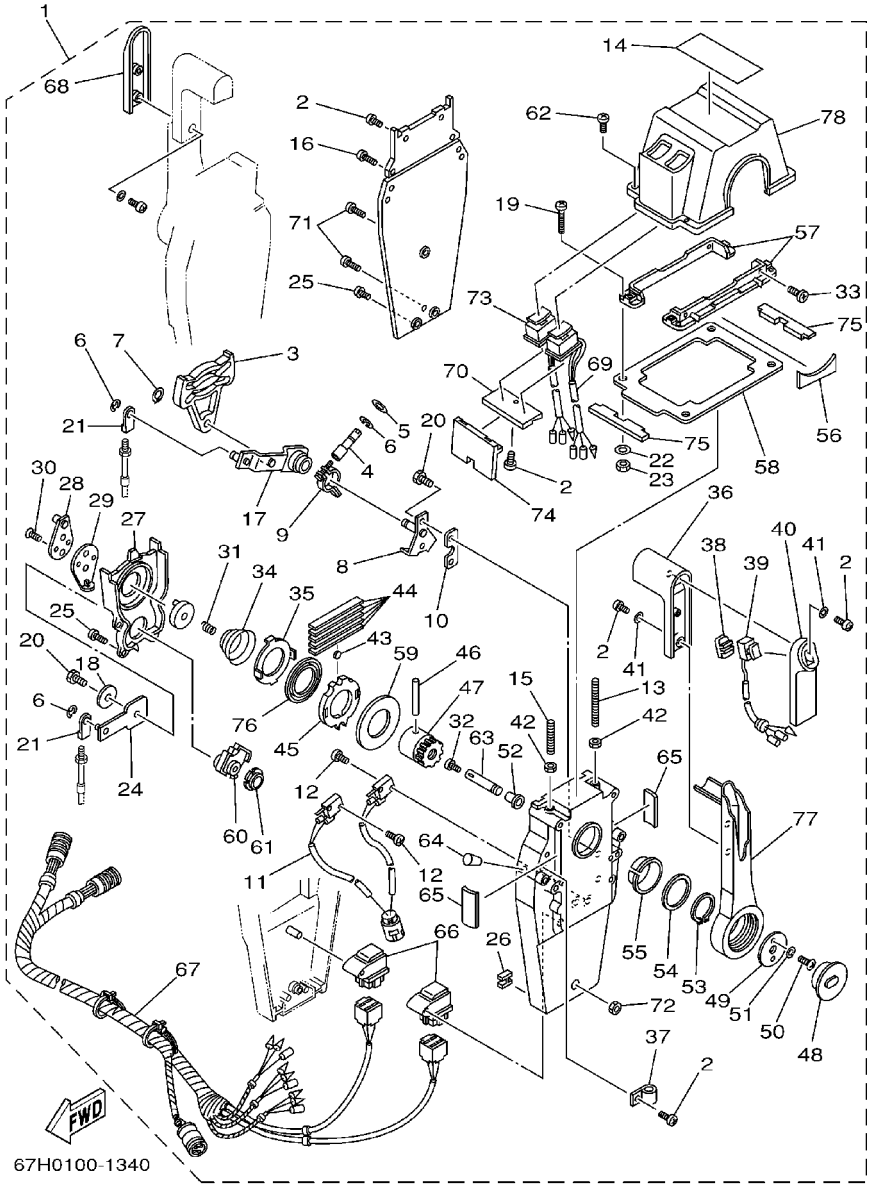

FIG. 32 REMOTE CONTROL ASSY 2

REF. NO.	PART NO.	DESCRIPTION	115	130	L130			REMARKS
28	EL8–48241–00	.ARM, DRIVE			2			
29	EL8–48254–00	.STOPPER, THROTTLE ADJUSTING			2			
30	92780–06020	.SCREW, FLAT HEAD			4			
31	EL8–48158–00	.SPRING 1			2			
32	98580–04006	.SCREW, PAN HEAD			2			
33	98780–05018	.SCREW, FLAT HEAD			4			
34	EL8–48244–00	.SPRING, FREE ACCEL.			2			
35	EL8–48245–00	.PLATE, LOCK			2			
36	704–48222–00	.GRIP, CONTROL LEVER			2			
37	704–82594–00	.CLAMP			1			
38	704–48228–00	.HOLDER, SWITCH			1			
39	704–82563–31	.TRIM & TILT SWITCH ASSY			1			
40	704–48229–00	.GRIP, CONTROL LEVER			1			
41	92990–05300	.WASHER, INTERNAL TOOTH			6			
42	95380–06600	.NUT, HEXAGON			4			
43	701–48248–00	.ROLLER, FREE ACCEL.			2			
44	703–48238–00	.SPRING, DETENT			10			
45	EL8–48232–00	.GEAR 1			2			
46	EL8–48164–00	.PIN 2			2			
47	704–48242–00	.SHAFT, DRIVE			2			
48	704–48225–00	.COVER			2			
49	704–48192–00	.WASHER 2			2			
50	97890–06018	.SCREW, PAN HEAD			4			
51	92990–06300	.WASHER, INTERNAL TOOTH			4			
52	702–48263–00	.BUSHING			2			
53	EL8–48279–00	.CIRCLIP 2			2			
54	704–48193–00	.WASHER 3			2			

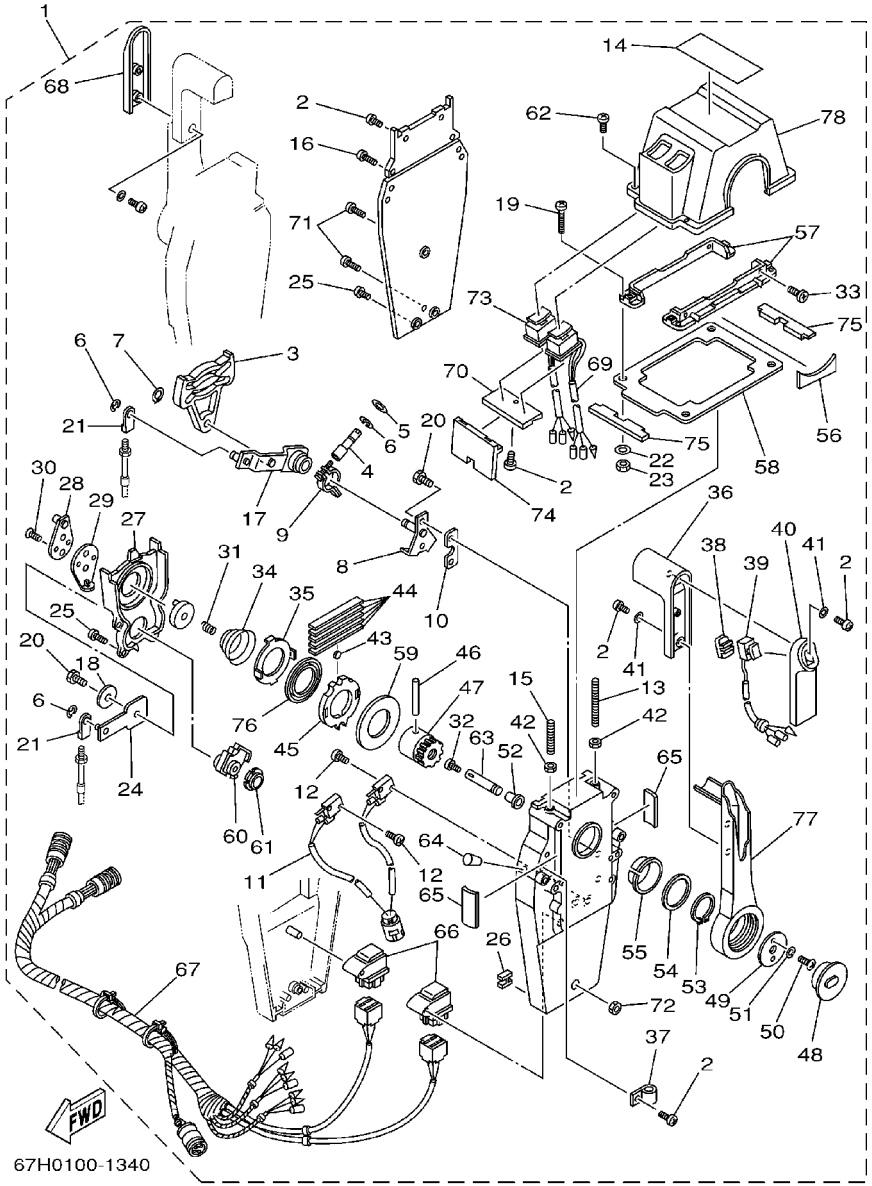

FIG. 32 REMOTE CONTROL ASSY 2

REF. NO.	PART NO.	DESCRIPTION	115	130	L130			REMARKS
55	EL8–48234–00	.BUSHING 1			2			
56	704–48219–00	.COVER, LEAD			2			
57	704–48144–00	.PLATE, STOPPER 2			2			
58	704–48176–10	.GROMMET			1			
59	703–48192–00	.WASHER 2			2			
60	EL8–48233–00	.GEAR 2			2			
61	703–48235–00	.BUSHING			2			
62	704–48282–00	.SCREW			4			
63	EL8–48153–10	.SHAFT, FREE ACCEL.			2			
64	704–48166–00	.PLUG			2			
65	704–48284–00	.GROMMET			4			
66	704–81950–00	.RELAY ASSY			2			
67	704–82590–10	.WIRE HARNESS ASSY			1			
68	704–48229–10	.GRIP, CONTROL LEVER			1			
69	704–82563–E0	.TRIM & TILT SWITCH ASSY			1			
70	704–48228–10	.HOLDER, SWITCH			1			
71	704–48128–00	.SCREW 2			3			
72	704–48156–00	.NUT 1			1			
73	704–82563–F0	.TRIM & TILT SWITCH ASSY			1			
74	704–48285–00	.GROMMET 2			1			
75	704–48286–00	.GROMMET 3			2			
76	704–48178–00	.PLATE, SHIFT			2			
77	704–48221–00	.LEVER, CONTROL			2			
78	704–48119–20	.COVER			1			

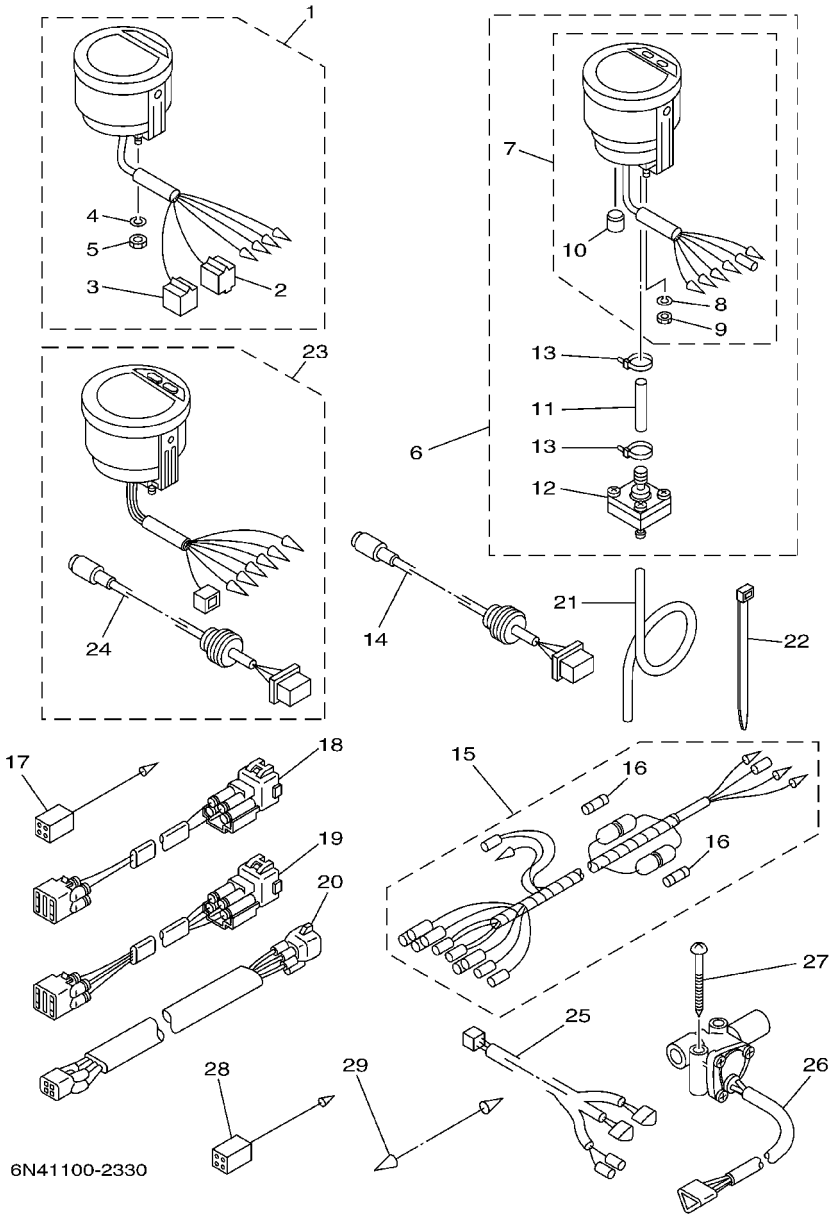

FIG. 33 METER

REF. NO.	PART NO.	DESCRIPTION	115	130	L130			REMARKS
1	6Y5–8350T–01	DIGITAL TACHOMETER ASSY	1	1	1			AP
2	9E450–04433	.CONNECTOR	1	1	1			M–4–W
3	9E450–04533	.CONNECTOR	1	1	1			F–4–W
4	92990–04100	.WASHER, SPRING	2	2	2			
5	95380–04600	.NUT	2	2	2			
6	6Y5–83500–S5	DIGITAL SPEEDOMETER ASSY	1	1				AP
7	6Y5–83570–S5	.SPEEDOMETER ASSY	1	1				
8	92990–04100	..WASHER, SPRING	2	2				
9	95380–04600	..NUT	2	2				
10	6Y5–83533–T2	..GROMMET	1	1				
11	6Y5–83557–31	.TUBE	1	1				
12	6Y5–83728–00	.CONNECTOR ASSY	1	1				
13	90465–11M10	.CLAMP	2	2				
14	6Y5–87122–S0	CORD ASSY 1	1	1				AP
15	6Y5–83553–M0	WIRE, LEAD	1	1				AP
	6Y5–83553–00	WIRE, LEAD			1			AP
16	1E6–82151–00	.FUSE (10A)	2	2				FOR 6Y5–83553–M0
	1E6–82151–00	.FUSE (10A)			1			FOR 6Y5–83553–00
17	6Y5–82117–00	WIRE, LEAD (BLACK)	1	1				AP
18	6R3–82521–70	WIRE, LEAD	1	1				AP FOR CARIB 7M
	6R3–82521–80	WIRE, LEAD			1			AP FOR CARIB 8M
19	6R3–82553–70	EXTENSION, WIRE LEAD	1	1				AP FOR CARIB 4P,7M
	6R3–82553–80	EXTENSION, WIRE LEAD			1			AP FOR CARIB 4P,8M
	68F–82553–80	EXTENSION, WIRE LEAD	1	1				AP FOR CANADA, OCEANIA
	68F–82553–90	EXTENSION, WIRE LEAD			1			AP FOR OCEANIA
20	6R3–82553–30	EXTENSION, WIRE LEAD L=3000			2			AP FOR CARIB
21	6Y5–83557–00	TUBE (6M)	1	1				AP FOR CARIB

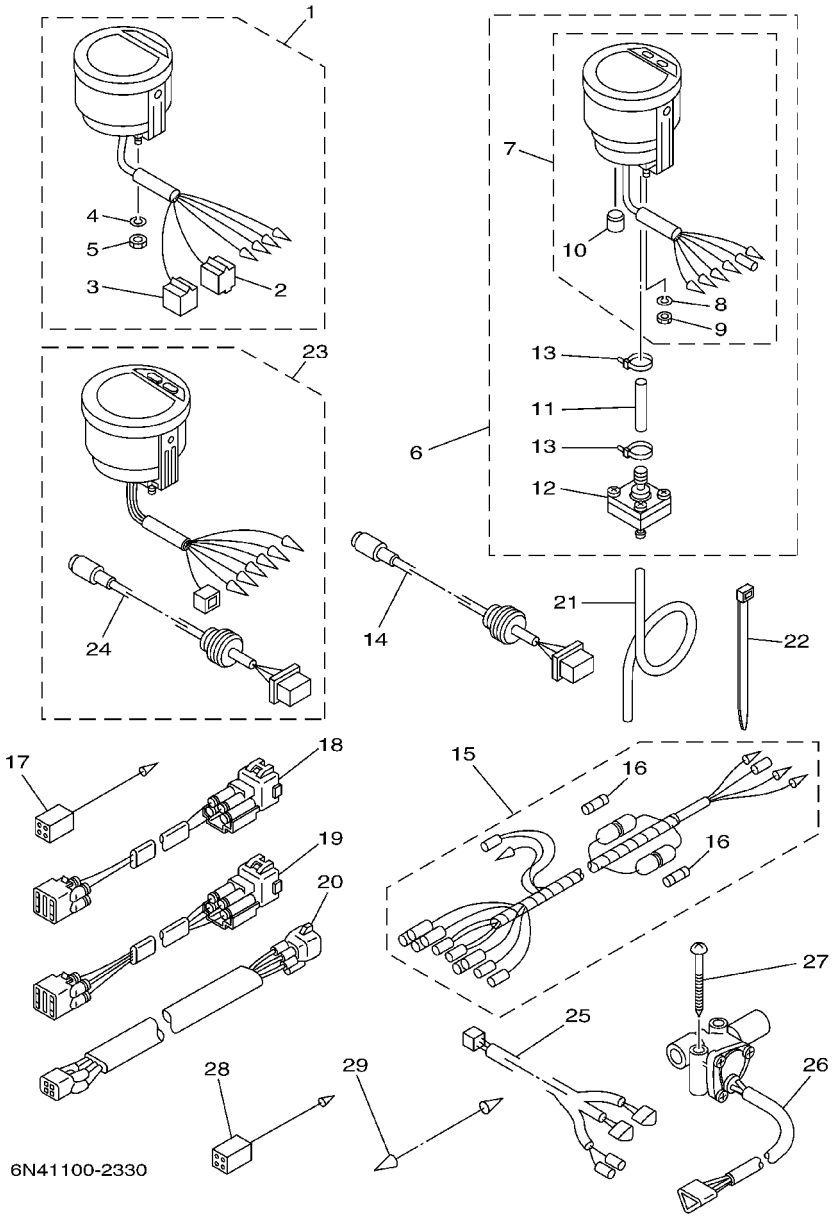

FIG. 33 METER

REF. NO.	PART NO.	DESCRIPTION	115	130	L130			REMARKS
21	6Y5–83557–10	TUBE (8M)	1	1				AP FOR CANADA, OCEANIA
22	90465–11M10	CLAMP	2	2				AP
23	6Y5–8350F–00	FUEL MANAGEMENT METER			1			AP FOR OCEANIA
24	6Y5–87122–S0	.CORD ASSY 1			1			
25	6Y5–83553–F1	WIRE, LEAD			1			AP FOR OCEANIA
26	6Y5–85752–01	SENDER UNIT ASSY, FUEL METER			2			AP FOR OCEANIA
27	90158–06002	SCREW, WOOD			4			AP FOR OCEANIA
28	6Y5–82117–00	WIRE, LEAD (BLACK)			1			AP FOR OCEANIA
29	703–82531–00	WIRE, LEAD			1			AP FOR OCEANIA

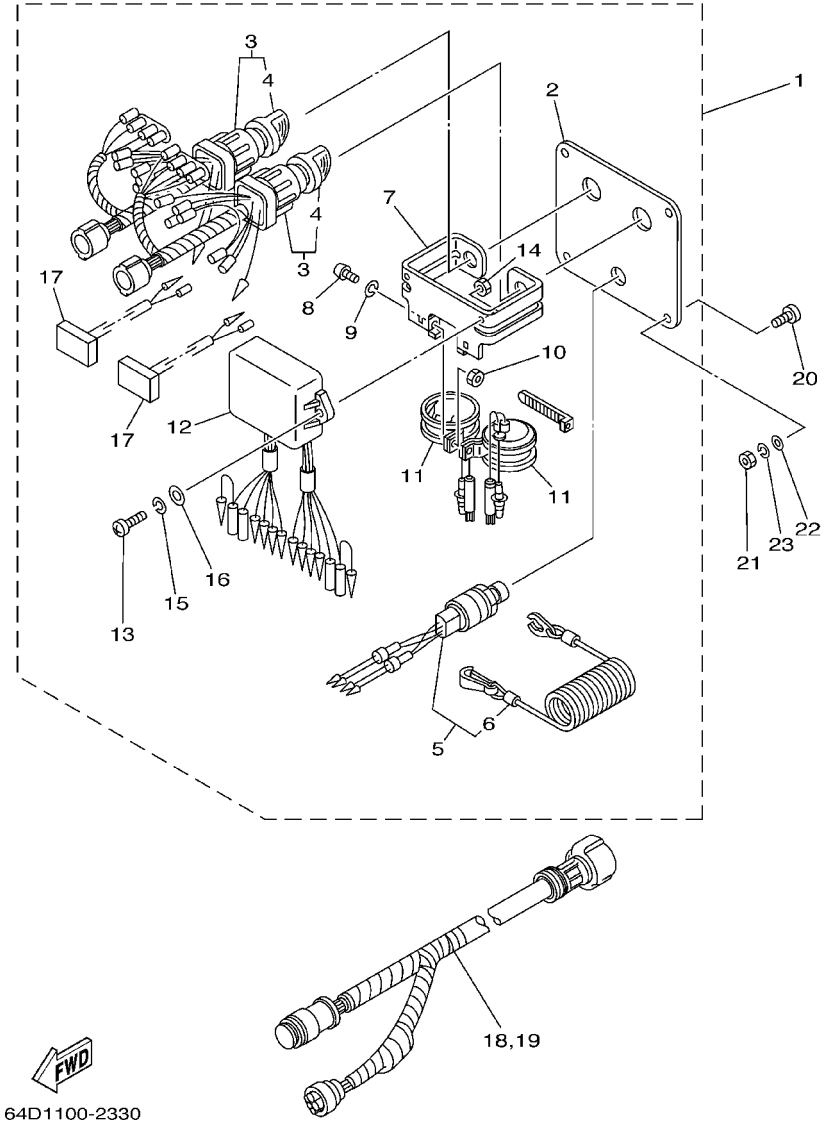

FIG. 34 SWITCH. PANEL

REF. NO.	PART NO.	DESCRIPTION	115	130	L130			REMARKS
1	6K1–82570–07	PANEL SWITCH ASSY			1			AP FOR OCEANIA
2	6K1–82571–01	.PANEL, SWITCH			1			
3	6K1–82510–06	.MAIN SWITCH ASSY			2			
4	703–82577–00	..CAP, KEY			1			
5	6K1–82575–00	.ENGINE STOP SWITCH ASSY			1			
6	682–82556–00	..STOPPER			1			
7	6K1–83614–01	.BRACKET			1			
8	98980–05010	.SCREW, BIND			2			
9	92990–05100	.WASHER, SPRING			2			
10	95380–05600	.NUT			2			
11	688–83383–11	.BUZZER			2			
12	6K1–85830–01	.CONTROL UNIT ASSY			1			
13	98980–06020	.SCREW, BIND			2			
14	95380–06600	.NUT, HEXAGON			2			
15	92990–06100	.WASHER, SPRING			2			
16	92990–06600	.WASHER, PLATE			2			
17	6K1–81980–00	.DIODE ASSY			2			
18	6K1–8258A–40	EXTENSION, WIRE HARNESS			1			AP FOR OCEANIA
19	61B–8258A–01	EXTENSION, WIRE HARNESS			1			AP FOR OCEANIA
20	90149–05M05	SCREW			4			AP FOR OCEANIA
21	95380–05600	NUT			4			AP FOR OCEANIA
22	92990–05600	WASHER, PLATE			4			AP FOR OCEANIA
23	92990–05100	WASHER, SPRING			4			AP FOR OCEANIA

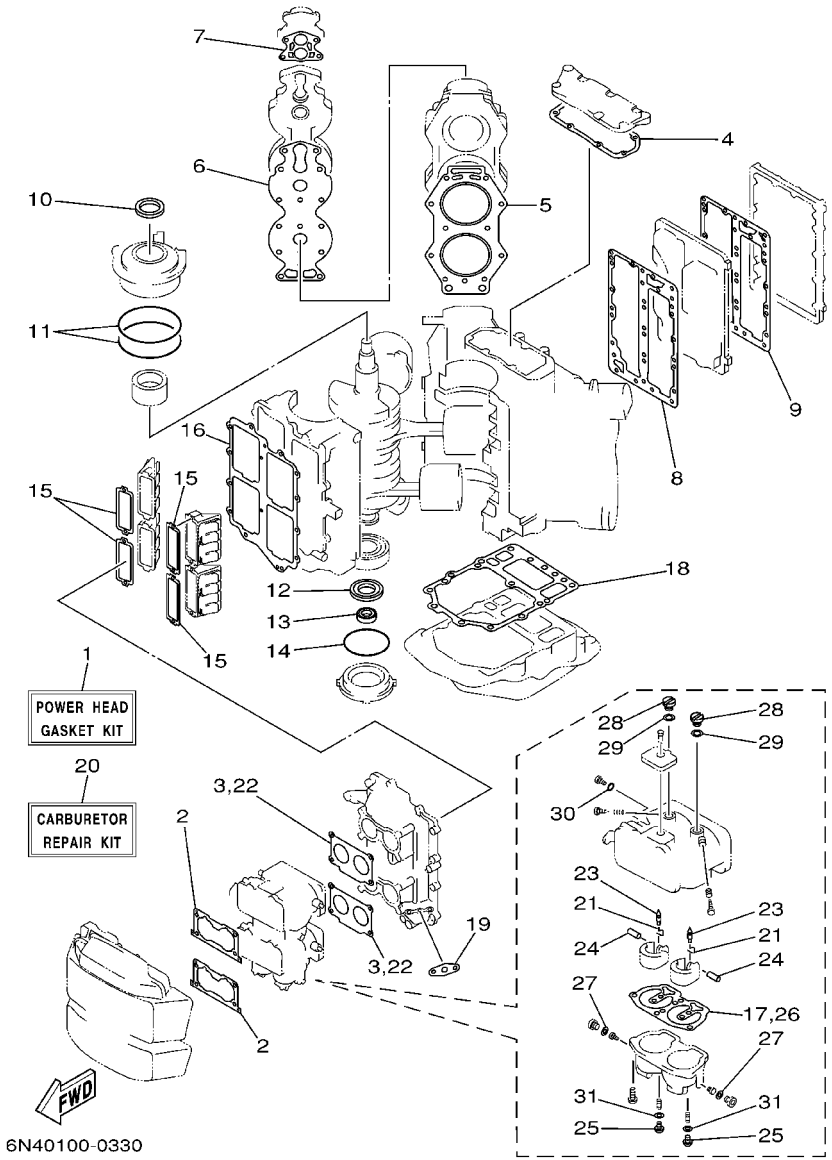

FIG. 35 REPAIR KIT 1

REF. NO.	PART NO.	DESCRIPTION	115	130	L130			REMARKS
1	6N6–W0001–A5	POWER HEAD GASKET KIT	1	1	1			
2	6K7–14483–00	.GASKET	2	2	2			
3	6E5–14198–A2	.GASKET	2	2	2			
4	6E5–11381–A2	.GASKET 1	1	1	1			
5	6E5–11181–A1	.GASKET, CYLINDER HEAD 1	2	2	2			
6	6E5–11193–A0	.GASKET, HEAD COVER 1	2	2	2			
7	688–12414–A1	.GASKET, COVER	2	2	2			
8	6E5–41112–A1	.GASKET, EXHAUST INNER COVER	1	1	1			
9	6E5–41112–A1	.GASKET, EXHAUST INNER COVER	1	1	1			
10	93102–40M14	.OIL SEAL	1	1	1			
11	93211–04001	.O–RING	2	2	2			
12	93102–35M13	.OIL SEAL	1	1	1			
13	93101–22M15	.OIL SEAL	1	1	1			
14	93210–74M35	.O–RING	1	1	1			
15	6E5–13621–A1	.GASKET, VALVE SEAT	4	4	4			
16	6E5–13645–A1	.GASKET, MANIFOLD 1	1	1	1			
17	64D–14384–01	.GASKET, FLOAT CHAMBER	2	2	2			
18	6G5–45113–A1	.GASKET, UPPER CASING	1	1	1			
19	650–24431–A0	.GASKET, FUEL PUMP 1	1	1	1			
20	6N6–W0093–09	CARBURETOR REPAIR KIT	1	1	1			
21	6E5–14159–00	.CLIP	2	2	2			
22	6E5–14198–A2	.GASKET	1	1	1			
23	6E5–14546–00	.VALVE, NEEDLE	2	2	2			
24	6E5–14386–02	.PIN, FLOAT	2	2	2			
25	64D–14394–00	.VALVE, DRAIN	2	2	2			
26	64D–14384–01	.GASKET, FLOAT CHAMBER	1	1	1			
27	6E5–14398–00	.GASKET	2	2	2			

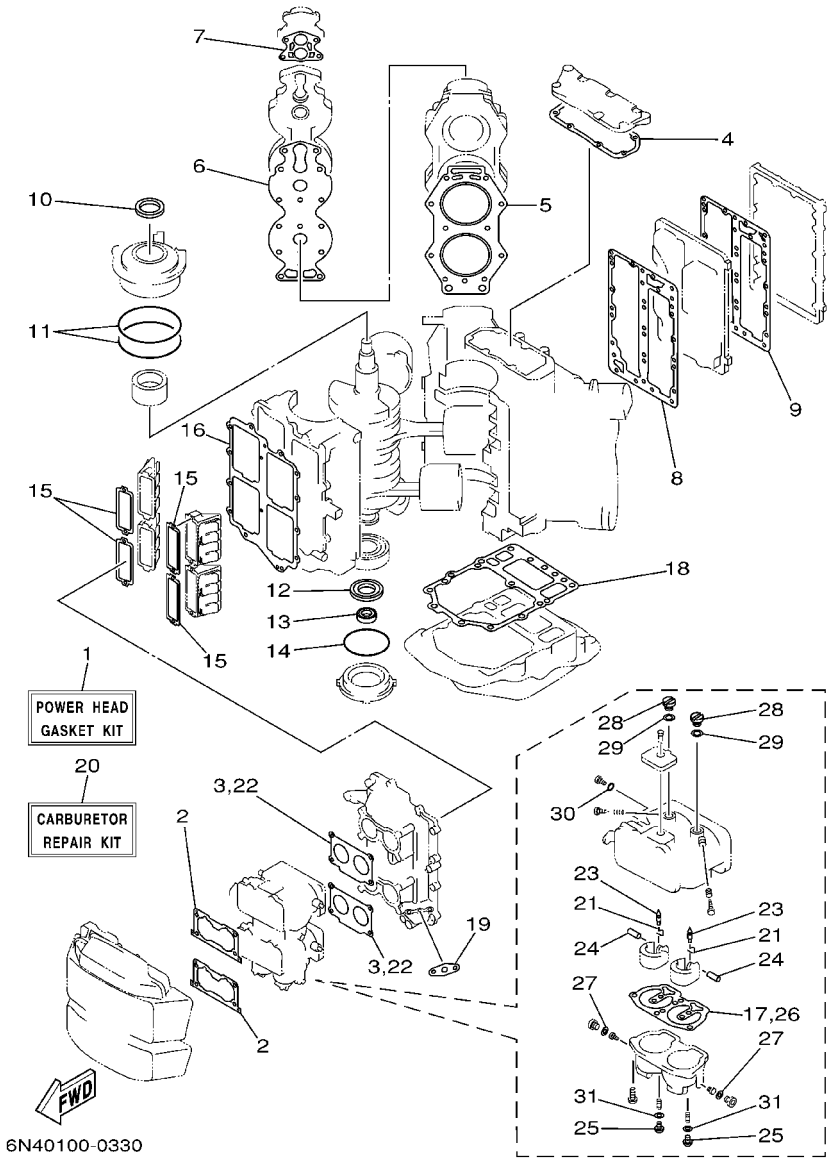

FIG. 35 REPAIR KIT 1

REF. NO.	PART NO.	DESCRIPTION	115	130	L130			REMARKS
28	6E5-14328-01	.PLUG	2	2	2			
29	6E5-14979-00	.GASKET	2	2	2			
30	6J8-14959-00	.GASKET	1	1	1			
31	61U-14959-00	.GASKET	2	2	2			

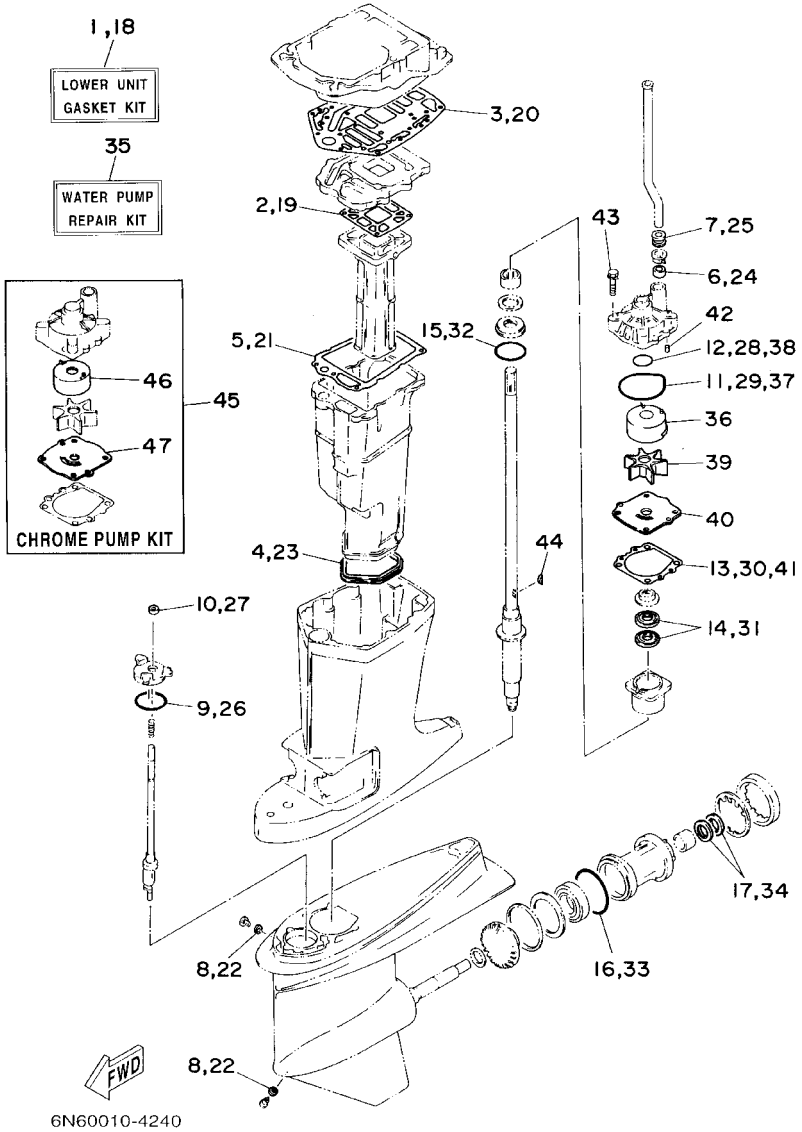

FIG. 36 REPAIR KIT 2

REF. NO.	PART NO.	DESCRIPTION	115	130	L130			REMARKS
1	6E5–W0001–F1	LOWER UNIT GASKET KIT	1					
2	6E5–41134–A0	.GASKET, EXHAUST MANIFOLD	1					
3	6G5–45114–A1	.GASKET, UPPER CASING	1					
4	6E5–45123–00	.GASKET, MUFFLER	1					
5	6E5–41135–A0	.GASKET, EXHAUST MANIFOLD	1					
6	6E5–44365–00	.DAMPER, WATER SEAL	1					
7	6E5–44366–00	.DAMPER, WATER SEAL	1					
8	90430–08020	.GASKET	2					
9	93210–58144	.O–RING	1					
10	93106–09014	.OIL SEAL	1					
11	93210–86M38	.O–RING	1					
12	93210–37160	.O–RING	1					
13	6E5–44315–A0	.GASKET, WATER PUMP	1					
14	93101–28M16	.OIL SEAL	2					
15	93210–55M14	.O–RING	1					
16	93210–86M39	.O–RING	1					
17	93101–30M17	.OIL SEAL	2					
18	6F3–W0001–C1	LOWER UNIT GASKET KIT		1	1			
19	6G5–41134–A1	.GASKET, EXHAUST MANIFOLD		1	1			
20	6G5–45114–A1	.GASKET, UPPER CASING		1	1			
21	6E5–41135–A0	.GASKET, EXHAUST MANIFOLD		1	1			
22	90430–08020	.GASKET		2	2			
23	6E5–45123–00	.GASKET, MUFFLER		1	1			
24	6E5–44365–00	.DAMPER, WATER SEAL		1	1			
25	6E5–44366–00	.DAMPER, WATER SEAL		1	1			
26	93210–58144	.O–RING		1	1			
27	93106–09014	.OIL SEAL		1	1			

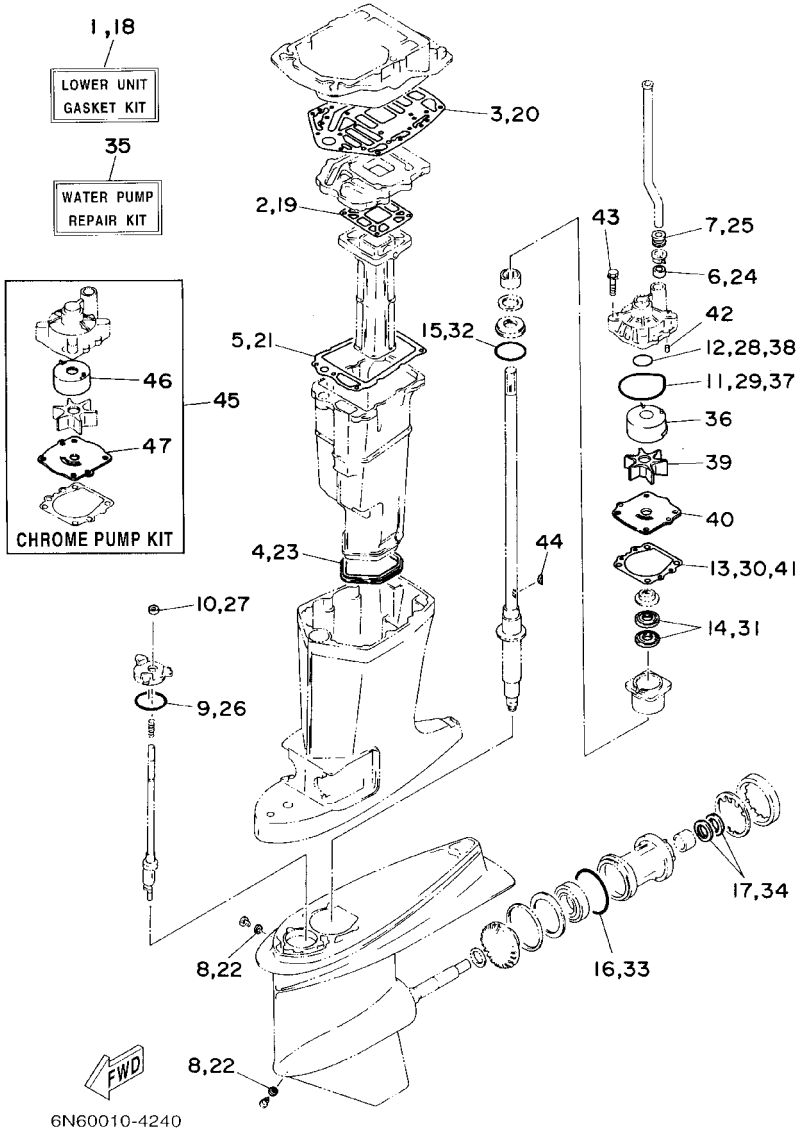

FIG. 36 REPAIR KIT 2

REF. NO.	PART NO.	DESCRIPTION	115	130	L130			REMARKS
28	93210–37160	.O–RING		1	1			
29	93210–86M38	.O–RING		1	1			
30	6E5–44315–A0	.GASKET, WATER PUMP		1	1			
31	93101–28M16	.OIL SEAL		2	2			
32	93210–55M14	.O–RING		1	1			
33	93210–86M39	.O–RING		1	1			
34	93101–30M17	.OIL SEAL		2	2			
35	6N6–W0078–02	WATER PUMP REPAIR KIT	1	1	1			
36	61A–44322–02	.INSERT, CARTRIDGE	1	1	1			
37	93210–86M38	.O–RING	1	1	1			
38	93210–37160	.O–RING	1	1	1			
39	6E5–44352–01	.IMPELLER	1	1	1			
40	6E5–44323–00	.OUTER PLATE, CARTRIDGE	1	1	1			
41	6E5–44315–A0	.GASKET, WATER PUMP	1	1	1			
42	93606–12019	.PIN, DOWEL	2	2	2			
43	90119–08M14	.BOLT, WITH WASHER	4	4	4			
44	90280–04M05	.KEY, WOODRUFF	1	1	1			
45	6E5–W0078–3A	CHROME PUMP KIT	1	1	1			
46	6R3–44322–42	.INSERT, CARTRIDGE	1	1	1			
47	6E5–44323–40	.OUTER PLATE, CARTRIDGE	1	1	1			

NUMERICAL INDEX

PART NO.	REF. NO.
6E5−W0001−F1	36 − 1
6F3−W0001−C1	36 − 18
6N6−W0001−A5	35 − 1
6E5−W0004−00	5 − 2
6N7−W0070−S0	1 − 21
6N7−W0070−30	1 − 21
6N7−W0070−50	1 − 21
6E5−W0078−3A	36 − 45
6N6−W0078−02	36 − 35
6N6−W0090−16−1S	2 − 1
6N7−W0090−17−1S	2 − 1
6N6−W0093−09	35 − 20
656−W2810−02	8 − 47
6E5−11111−10−1S	4 − 1
6L1−11111−00−1S	4 − 1
6E5−11119−01	2 − 16
6E5−11181−A1	4 − 2
	35 − 5
6E5−11191−01−1S	4 − 4
6E5−11193−A0	4 − 5
	35 − 6
6E5−11325−00	2 − 14
6E5−11370−01	5 − 9
6K7−11371−01−1S	2 − 22
6E5−11372−01	2 − 5
6G5−11372−00−1S	4 − 23
6H1−11372−00	22 − 20
624−11379−00	2 − 3
6E5−11381−A2	2 − 23
	35 − 4
6G5−11382−A1	4 − 22
6N7−11411−01	3 − 1
6E5−11447−00	3 − 2
663−11518−01	2 − 4
6R3−11536−00	3 − 9
6R3−11537−00	7 − 16
64D−11603−01	3 − 18
	3 − 20
64D−11604−01	3 − 18
	3 − 20
64D−11605−01	3 − 18
	3 − 20
6R5−11631−11−93	3 − 17
6R5−11633−10	3 − 21
6R5−11634−10	3 − 22
6R5−11635−11	3 − 17
6R5−11636−11	3 − 17
6R5−11642−11−93	3 − 19

PART NO.	REF. NO.
6R5−11645−11	3 − 19
6R5−11646−11	3 − 19
6R5−11650−10	3 − 23
6E5−12411−30	4 − 7
6G5−12413−00−1S	4 − 8
688−12414−A1	4 − 9
	35 − 7
6G5−12416−00	4 − 19
6R3−12572−00	16 − 53
6E5−12576−00	4 − 25
6R3−12580−00	16 − 54
6G5−12581−00	22 − 12
6R3−13117−00	7 − 17
6R3−13183−10	7 − 12
6N6−13200−00	7 − 1
6N7−13200−00	7 − 1
6E5−13411−00	8 − 28
6E5−13414−00	8 − 29
6N7−13416−00	7 − 7
6E5−13437−43	8 − 45
6E5−13437−62	8 − 45
6E5−13448−00	8 − 25
6R3−13471−00	7 − 2
6L2−13475−00	7 − 3
6E5−13552−00	5 − 7
6E5−13610−00	5 − 1
6E5−13621−A1	5 − 3
	35 − 15
6E5−13641−11−1S	5 − 6
6E5−13645−A1	5 − 14
	35 − 16
6E5−14159−00	6 − 7
	35 − 21
6E5−14198−A2	5 − 19
	35 − 3
	35 − 22
6E5−14223−00	6 − 21
6E5−14276−01	7 − 26
6E5−14301−16	6 − 1
6L1−14301−04	6 − 1
6E5−14302−16	6 − 2
6L1−14302−04	6 − 2
6E5−14321−00	6 − 16
6E5−14323−03	6 − 20
6E5−14324−00	6 − 25
6A0−14325−00	9 − 26
6E5−14328−01	6 − 18
	35 − 28

PART NO.	REF. NO.
6J8−14334−00	6 − 17
64D−14381−00	6 − 4
61A−14383−01	6 − 15
64D−14384−01	6 − 3
	35 − 17
	35 − 26
6E5−14385−02	6 − 5
6E5−14386−02	6 − 8
	35 − 24
64D−14394−00	6 − 11
	35 − 25
6E5−14398−00	6 − 13
	35 − 27
6E5−1441K−00	5 − 27
6N7−14440−01	5 − 26
6K7−14483−00	5 − 29
	35 − 2
624−14485−00	5 − 8
6E5−14488−00	12 − 21
6E5−14527−01	6 − 23
6E5−14546−00	6 − 6
	35 − 23
6E5−14711−01−5B	22 − 29
6E5−14737−00	22 − 30
64D−1492E−88	6 − 12
64D−1492E−90	6 − 12
64D−1492F−39	6 − 9
64D−1492F−41	6 − 9
61A−1492H−12	6 − 14
6J8−14959−00	6 − 26
	35 − 30
61U−14959−00	6 − 10
	35 − 31
6E5−14979−00	6 − 19
	35 − 29
6N6−15100−01−1S	2 − 2
6N7−15100−01−1S	2 − 2
6R3−15163−00−1S	3 − 3
6G5−15359−00−94	3 − 12
6E5−21708−10	8 − 1
6K1−21708−10	8 − 1
61A−21708−20	8 − 1
6E5−21733−20	8 − 2
6E5−21734−01−33	8 − 18
6E5−21746−00	8 − 20
6E5−21750−05	8 − 24
6E5−21770−03	8 − 3
6E5−21798−01−33	8 − 19

PART NO.	REF. NO.
6YJ−24167−00	27 − 7
6YJ−24201−10	27 − 1
646−24251−02	8 − 6
6Y1−24260−12	27 − 3
6Y1−24268−00	27 − 6
6Y2−24305−04	10 − 6
	27 − 13
6Y2−24306−42	10 − 1
	27 − 8
6YK−24307−42	9 − 41
6Y2−24307−41	11 − 1
6E5−24312−00	4 − 16
6N7−24313−00	9 − 1
6R3−24313−20	9 − 1
6E5−24314−00	9 − 13
6G5−24316−10	9 − 32
6G5−24318−10	9 − 36
6E5−24319−01	8 − 7
6G5−24319−10	9 − 37
6E5−24321−01	8 − 11
6E5−24322−00	8 − 4
64E−24323−00	8 − 34
6Y1−24329−00	27 − 5
6E5−24351−51	10 − 3
	11 − 3
	27 − 10
6Y2−24360−52	10 − 5
	11 − 5
	27 − 12
6E5−24367−10	16 − 40
6E5−24376−10	9 − 35
6R3−24377−00	9 − 2
6R3−24377−10	9 − 2
650−24378−00	4 − 15
6E5−24379−00	8 − 12
	8 − 36
	8 − 38
6E5−24410−03	9 − 16
6E5−24411−00	9 − 21
6E5−24412−10	9 − 28
6E5−24413−00	9 − 18
6A0−24421−01	9 − 25
6E5−24423−00	9 − 23
648−24424−00	9 − 22
650−24431−A0	9 − 29
	35 − 19
6E5−24434−02	9 − 24
6E5−24435−00	9 − 20

PART NO.	REF. NO.
6E5−24444−00	9 − 17
6E5−24471−00	9 − 19
61N−24521−00	9 − 7
6R3−24560−00	9 − 5
61N−24563−00	9 − 6
6E5−24566−00	9 − 9
6YJ−24610−01	27 − 2
6A1−28176−00	16 − 58
6E5−41111−00−1S	4 − 11
6L1−41111−00−1S	4 − 11
6E5−41112−A1	4 − 12
	4 − 13
	35 − 8
	35 − 9
6N7−41113−00−1S	4 − 14
6G5−41131−01−5B	22 − 21
6E5−41132−10−5B	22 − 25
6L1−41132−00−5B	22 − 25
6E5−41134−A0	22 − 26
	36 − 2
6G5−41134−A1	22 − 26
	36 − 19
6E5−41135−A0	22 − 33
	36 − 5
	36 − 21
6G5−41137−02−94	22 − 10
6G5−41137−11−94	22 − 10
6E5−41213−00	17 − 32
6E5−41217−01	5 − 21
6H1−41237−00	7 − 21
6R5−41237−00	7 − 23
662−41237−01	17 − 25
	17 − 31
6R3−41241−00	7 − 20
6E5−41256−01	5 − 22
661−41262−02	5 − 23
6N7−41271−00	5 − 24
689−41273−00	5 − 25
688−41611−00	12 − 9
688−41612−00	12 − 10
6E5−41631−01−1S	17 − 10
6E5−41632−02−1S	17 − 6
6E5−41636−01	17 − 23
688−41636−00	17 − 29
6E5−42510−A1−8D	19 − 10
6E5−42510−B1−8D	19 − 10
624−42542−00	8 − 32
	8 − 43

PART NO.	REF. NO.
624−42542−00	13 − 3
6N6−42610−T0−8D	1 − 1
6N6−42610−60−4D	1 − 1
6N6−42610−80−4D	1 − 1
6N7−42610−T0−4D	1 − 1
6N7−42610−60−4D	1 − 1
6N7−42610−80−4D	1 − 1
6N7−42613−00−4D	1 − 12
6R3−42615−01	1 − 11
6N7−42619−00	1 − 9
6N7−42627−00	1 − 10
6N7−42636−00	1 − 14
6R3−42647−00	1 − 2
6R3−42662−00	1 − 5
6N7−4267A−30	1 − 25
6N7−4267A−40	1 − 25
6N6−42677−40	1 − 18
6N7−42678−30	1 − 24
6N6−42681−42	1 − 22
6N7−42681−30	1 − 22
6N7−42681−50	1 − 22
6N6−42682−42	1 − 23
6N7−42682−30	1 − 23
6N7−42682−50	1 − 23
6N7−42683−40	1 − 20
6N6−42686−40	1 − 17
6N6−42686−60	1 − 17
6N7−42686−40	1 − 17
6N7−42686−60	1 − 17
6N6−42687−30	1 − 19
6N6−42687−60	1 − 19
6N7−42687−30	1 − 19
6N7−42687−60	1 − 19
6N7−42711−43−8D	16 − 1
648−42715−00	17 − 49
6E5−42716−00	16 − 43
6E5−42724−00	22 − 11
6N7−42725−20	16 − 10
6N7−42725−30	16 − 10
688−42726−10	16 − 28
6N7−42738−02−5B	16 − 11
6N7−42741−01−8D	16 − 29
6H4−42748−00	16 − 3
6E5−42761−00−1S	2 − 18
6E5−42762−00−1S	2 − 19
6E5−42769−00	22 − 5
6R3−42771−01−8D	16 − 30
6G5−42791−10	16 − 57

NUMERICAL INDEX

PART NO.	REF. NO.
6K7−42791−00	16 − 57
6R3−42791−41	22 − 2
6R3−42792−41	22 − 3
6R3−42811−01	16 − 15
6R3−42811−10	16 − 18
6R3−42813−00	16 − 21
6R3−42814−00	1 − 6
6N7−42815−01−8D	16 − 4
6R3−42816−00	16 − 16
6R3−42824−00	16 − 14
6N7−42828−00	16 − 24
6R3−42828−00	16 − 25
6N7−42850−00	16 − 17
6N7−42850−10	16 − 19
6N7−42850−20	16 − 20
64E−43111−02−8D	18 − 1
64E−43112−02−8D	18 − 9
64E−43126−00	18 − 37
64E−43131−01	18 − 15
64E−43139−02	19 − 1
6G5−43144−00	18 − 27
6E5−43145−01	28 − 8
6G5−43148−00	18 − 32
6G5−43181−02	18 − 29
6G5−43185−02	18 − 30
64E−43311−10−8D	18 − 22
64E−43311−20−8D	18 − 22
61A−43376−00	19 − 8
64E−4380F−00	21 − 33
64E−4380J−00	21 − 30
64E−43800−02−4D	20 − 1
64E−43802−00	21 − 8
64E−43805−00	21 − 37
64E−4381G−00	20 − 27
64E−43810−00	20 − 6
6E5−43814−02	20 − 13
64E−43816−00	21 − 17
64E−43817−00	20 − 5
64E−43817−10	21 − 19
64E−43818−01	20 − 32
64E−4382G−00	20 − 29
64E−43820−00	20 − 15
64E−43821−00	20 − 16
64E−43822−00	20 − 17
64E−43825−01	20 − 2
64E−43827−00	21 − 22
64E−43828−00	20 − 22
64E−43829−00	20 − 23
64E−43830−00	21 − 4
64E−43831−00	21 − 2
64E−4384J−00	20 − 18
64E−43841−00	21 − 7
64E−43843−00	21 − 6
64E−43843−10	21 − 38
64E−43850−00	21 − 15
64E−43851−00	21 − 11
64E−43855−00	21 − 14
6E5−43858−00	20 − 28
64E−43858−00	21 − 12
	21 − 18
72X−43858−00	21 − 5
64E−43859−00	21 − 13
6H1−4386K−10	21 − 29
64E−43860−00	21 − 20
6E5−43862−00	20 − 10
	20 − 14
6G5−43863−00	21 − 10
6E5−43864−00	20 − 20
6G5−43864−00	20 − 19
6G5−43865−00	21 − 35
64E−43865−00	21 − 16
64E−43866−00	20 − 9
64E−43867−00	20 − 8
64E−43868−00	21 − 3
64E−43869−00	20 − 26
64E−4387A−00	21 − 23
6E5−43872−00	20 − 12
64E−43873−00	21 − 24
6E5−43874−01	20 − 21
64E−43875−00	21 − 25
64E−43879−00	21 − 27
64E−43879−10	21 − 26
64E−4388E−00	20 − 25
64E−4388E−10	21 − 1
64E−4388J−00	20 − 3
64E−43880−01	21 − 28
64E−43883−00	20 − 11
64E−43891−00	21 − 31
64E−43892−00	21 − 34
6E5−43896−00	21 − 9
64E−43897−00	20 − 24
64E−43898−00	20 − 7
6E5−44117−00−1S	17 − 36
6E5−44118−01−94	17 − 44
6E5−44120−03	17 − 51
6E5−44120−23	17 − 51
68F−44121−00	17 − 38
6E5−44122−00	17 − 39
6E5−44150−02	23 − 17
6L6−44150−01	25 − 18
688−44194−00	17 − 14
	17 − 28
61A−44311−01	23 − 24
	25 − 25
6E5−44312−00	24 − 20
	26 − 17
6E5−44315−A0	23 − 31
	25 − 32
	36 − 13
	36 − 30
	36 − 41
6R3−44322−42	36 − 46
61A−44322−02	23 − 25
	25 − 26
	36 − 36
6E5−44323−00	23 − 30
	25 − 31
	36 − 40
6E5−44323−40	36 − 47
6E5−44352−01	23 − 28
	25 − 29
	36 − 39
6E5−44361−00	24 − 2
6E5−44361−20	24 − 2
	26 − 2
6E5−44365−00	24 − 3
	24 − 19
	26 − 3
	26 − 16
	36 − 6
	36 − 24
6E5−44366−00	24 − 1
	26 − 1
	36 − 7
	36 − 25
6E5−44391−00	16 − 9
6E5−44511−00−5B	19 − 38
6E5−44514−00−94	19 − 31
6G5−44526−00	18 − 3
68F−44533−00	2 − 20
6G5−44551−01−8D	19 − 13
6E5−44552−01−94	19 − 24
6E5−44553−01−8D	19 − 27
6E5−44555−00−94	19 − 16
6E5−44575−00	19 − 15
663−44575−00	19 − 37
6E5−45111−02−8D	22 − 1
6E5−45111−23−8D	22 − 1
6G5−45113−A1	22 − 14
	35 − 18
6G5−45114−A1	22 − 22
	36 − 3
	36 − 20
663−45119−00	18 − 14
	18 − 25
6E5−45123−00	22 − 32
	36 − 4
	36 − 23
6E5−45155−00	22 − 4
688−45214−02	24 − 10
	26 − 10
688−45215−02	24 − 11
	26 − 11
6G5−45251−02	18 − 2
6E5−45300−17−8D	23 − 1
6E5−45300−27−8D	23 − 1
6L6−45300−25−8D	25 − 1
6E5−45301−05−8D	23 − 2
	25 − 2
6E5−45318−00	22 − 36
6E5−45321−00	23 − 13
	25 − 14
6E5−45331−00−94	23 − 34
	25 − 35
6E5−45332−00−94	23 − 58
6L6−45332−00−94	25 − 61
688−45341−10	23 − 7
	25 − 9
6E5−45344−00	23 − 40
	25 − 41
6E5−45371−01	24 − 14
6E5−45371−10	24 − 28
6L6−45371−00	26 − 14
688−45375−00	24 − 9
	26 − 9
663−45376−00−94	24 − 8
	26 − 8
6E5−45378−00	23 − 10
6J8−45378−00	25 − 12
688−45383−02	23 − 68
	25 − 74
688−45384−00	23 − 69
688−45384−00	25 − 75
6E5−45501−01	23 − 43
6E5−45501−21	23 − 43
	25 − 44
61A−45527−00	23 − 23
	25 − 24
6E5−45536−00	23 − 9
	25 − 11
6L6−45538−00	25 − 6
61A−45538−00	23 − 20
	25 − 21
6E5−45551−02	23 − 44
	25 − 45
6E5−45560−01	23 − 46
6L6−45560−00	25 − 47
6E5−45567−01−10	23 − 5
	25 − 7
6E5−45567−01−12	23 − 5
	25 − 7
6E5−45567−01−15	23 − 5
	25 − 7
6E5−45567−01−18	23 − 5
	25 − 7
6E5−45567−01−30	23 − 5
	25 − 7
6E5−45567−01−40	23 − 5
	25 − 7
6E5−45567−01−50	23 − 5
	25 − 7
6L6−45570−00	25 − 63
6E5−45571−01	23 − 60
6E5−45576−00	23 − 61
6L6−45576−00	25 − 65
6L6−45577−00−10	23 − 65
	25 − 72
6L6−45577−00−12	23 − 65
	25 − 72
6L6−45577−00−15	23 − 65
	25 − 72
6L6−45577−00−18	23 − 65
	25 − 72
6L6−45577−00−30	23 − 65
	25 − 72
6L6−45577−00−40	23 − 65
	25 − 72
6L6−45577−00−50	23 − 65
	25 − 72
6K1−45578−01−10	25 − 67
6K1−45578−01−12	25 − 67
6K1−45578−01−15	25 − 67
6K1−45578−01−18	25 − 67
6K1−45578−01−30	25 − 67
6K1−45578−01−40	25 − 67
6K1−45578−01−50	25 − 67
6E5−45587−01−10	23 − 37
	25 − 38
6E5−45587−01−12	23 − 37
	25 − 38
6E5−45587−01−15	23 − 37
	25 − 38
6E5−45587−01−18	23 − 37
	25 − 38
6E5−45587−01−30	23 − 37
	25 − 38
6E5−45587−01−40	23 − 37
	25 − 38
6E5−45587−01−50	23 − 37
	25 − 38
6E5−45611−01	23 − 48
6K1−45611−00	25 − 49
6L6−45611−20	25 − 51
6E5−45631−01	23 − 56
	25 − 59
6E5−45633−01	23 − 57
	25 − 60
6E5−45634−01	23 − 50
	25 − 53
6E5−45641−02	23 − 49
6K1−45641−01	25 − 52
6L6−45930−01−98	26 − 23
688−45930−02−98	24 − 26
688−45932−60−98	24 − 26
6E5−45941−00−EL	24 − 26
6E5−45943−00−EL	24 − 26
6E5−45945−01−EL	24 − 26
6E5−45947−00−EL	24 − 26
6E5−45949−00−EL	24 − 26
6E5−45952−00−EL	24 − 26
6E5−45954−00−EL	24 − 26
6E5−45956−00−EL	24 − 26
6E5−45970−10	24 − 27
6L6−45970−00−98	26 − 23
688−45970−03−98	24 − 26
6E5−45972−10	24 − 27
6L6−45972−00−98	26 − 23
688−45972−02−98	24 − 26

NUMERICAL INDEX

PART NO.	REF. NO.
6E5−45974−10	24 − 27
688−45974−02−98	24 − 26
6E5−45976−10	24 − 27
688−45976−01−98	24 − 26
6E5−45978−10	24 − 27
688−45978−60−98	24 − 26
6E5−45987−01	24 − 21
	26 − 18
6E5−45994−10	24 − 29
688−45997−01	24 − 22
	26 − 19
704−48119−20	32 − 78
EL8−48127−00	32 − 25
704−48128−00	32 − 71
6A5−48129−10	32 − 12
704−48144−00	32 − 57
703−48152−00	31 − 57
EL8−48153−10	32 − 63
703−48153−00	31 − 3
704−48156−00	32 − 72
EL8−48158−00	32 − 31
EL8−48164−00	32 − 46
704−48166−00	32 − 64
704−48176−10	32 − 58
704−48178−00	32 − 76
703−48189−00	31 − 17
EL8−48191−00	32 − 18
703−48192−00	32 − 59
704−48192−00	32 − 49
704−48193−00	32 − 54
703−48198−00	31 − 14
703−48205−17	30 − 1
	31 − 1
704−48207−23	30 − 2
	32 − 1
703−48211−01	31 − 61
703−48212−00	31 − 58
703−48213−00	31 − 59
703−48215−00	31 − 43
704−48215−10	32 − 14
703−48219−00	31 − 30
704−48219−00	32 − 56
703−48221−00	31 − 56
704−48221−00	32 − 77
703−48222−00	31 − 27
704−48222−00	32 − 36
703−48223−00	31 − 28
703−48225−00	31 − 29

PART NO.	REF. NO.
704−48225−00	32 − 48
703−48226−00	31 − 26
703−48227−00	31 − 24
704−48228−00	32 − 38
704−48228−10	32 − 70
704−48229−00	32 − 40
704−48229−10	32 − 68
EL8−48231−00	32 − 27
EL8−48232−00	32 − 45
703−48232−00	31 − 62
EL8−48233−00	32 − 60
EL8−48234−00	32 − 55
703−48234−00	31 − 18
703−48235−00	31 − 4
	32 − 61
703−48236−00	31 − 16
703−48238−00	31 − 22
	32 − 44
EL8−48241−00	32 − 28
704−48242−00	32 − 47
703−48243−00	31 − 15
EL8−48244−00	32 − 34
703−48244−00	31 − 21
EL8−48245−00	32 − 35
703−48245−00	31 − 11
701−48246−00	32 − 5
703−48246−00	31 − 23
701−48248−00	31 − 13
	32 − 43
EL8−48251−00	32 − 3
703−48252−00	31 − 12
EL8−48254−00	32 − 29
EL8−48259−00	32 − 7
703−48261−01	31 − 2
704−48261−00	32 − 17
704−48262−00	32 − 8
702−48263−00	32 − 52
703−48264−00	31 − 6
704−48264−00	32 − 9
703−48265−00	31 − 9
704−48265−00	32 − 4
704−48266−00	32 − 10
703−48268−00	31 − 5
EL8−48271−00	32 − 24
703−48271−00	31 − 60
EL8−48279−00	32 − 53
EL8−48281−00	32 − 13
703−48281−00	31 − 31

PART NO.	REF. NO.
704−48281−00	32 − 15
703−48282−00	31 − 32
704−48282−00	32 − 62
704−48283−00	32 − 19
703−48284−00	31 − 52
704−48284−00	32 − 65
704−48285−00	32 − 74
704−48286−00	32 − 75
701−48287−00	31 − 42
704−48287−00	32 − 22
703−48291−10	31 − 39
703−48293−10	31 − 41
701−48320−50	30 − 3
701−48320−60	30 − 3
701−48320−80	30 − 3
6E5−48344−00	17 − 7
	17 − 42
703−48345−01	31 − 19
	32 − 21
701−48350−00	30 − 3
701−48350−20	30 − 3
703−48358−00	31 − 20
	32 − 26
6E5−48531−00	17 − 1
6E5−48538−00	17 − 2
6E5−61301−01	29 − 1
6E5−61303−00	29 − 5
6E5−61311−11	29 − 3
6E5−61313−00	29 − 2
6E5−61315−00	29 − 4
6E5−61350−02	28 − 1
6E5−61351−01	28 − 2
6E5−61355−00	28 − 5
6E5−81332−00	12 − 13
6N7−81337−00	12 − 16
6N7−81800−10	15 − 1
6N7−81801−00	15 − 8
6N7−81807−00	15 − 11
61A−81809−00	15 − 3
6N7−81810−00	15 − 5
6N7−81813−00	15 − 9
6E5−8182A−10	15 − 17
6E5−8182E−10	15 − 15
6E5−8182F−10	15 − 16
6K7−8182G−10	15 − 6
6E5−8182K−10	15 − 18
6N7−81820−10	15 − 10
6R3−81822−00−94	15 − 19

PART NO.	REF. NO.
61A−81824−00	15 − 4
6K7−81826−10	15 − 14
6N7−81830−00	15 − 13
6N7−81840−00	15 − 7
6N7−81850−10	15 − 2
6N7−81857−00	15 − 12
6E5−81900−01	8 − 9
6E5−81922−00	8 − 10
61A−81941−00	14 − 8
6R3−81942−00	13 − 16
6E5−81948−22	14 − 15
6N7−81948−00−94	13 − 10
6E5−8195A−00	14 − 11
6E5−81950−00	14 − 10
704−81950−00	32 − 66
689−81952−10	14 − 9
6R3−81960−00	13 − 13
6K1−81980−00	34 − 17
6N7−82105−02	14 − 34
6E5−82116−00	14 − 14
6E5−82117−01	14 − 35
6Y5−82117−00	33 − 17
	33 − 28
6G5−82119−00	14 − 13
6E5−82147−00	18 − 26
6E5−82147−20	18 − 26
6E5−82148−00	18 − 6
	18 − 10
6E5−82149−00	19 − 19
1E6−82151−00	33 − 16
663−82151−00	14 − 31
705−82151−00	14 − 32
6G5−82152−00	14 − 33
6A0−82317−00	8 − 31
	8 − 42
	13 − 2
663−82317−01	12 − 18
6G1−82370−21	14 − 4
663−82370−01	14 − 4
63V−82377−50	18 − 40
6K1−82510−06	34 − 3
703−82510−43	31 − 44
6R3−82519−00	14 − 36
662−82519−00	14 − 5
6R3−82521−70	33 − 18
6R3−82521−80	33 − 18
6E5−82531−10	14 − 39
703−82531−00	31 − 46

PART NO.	REF. NO.
703−82531−00	33 − 29
703−82540−00	31 − 50
704−82540−10	32 − 11
6R3−82553−30	33 − 20
6R3−82553−70	33 − 19
6R3−82553−80	33 − 19
68F−82553−80	33 − 19
68F−82553−90	33 − 19
682−82556−00	31 − 48
	34 − 6
688−82560−10	14 − 27
6R3−82563−00	14 − 43
703−82563−02	31 − 55
704−82563−E0	32 − 69
704−82563−F0	32 − 73
704−82563−31	32 − 39
6E3−8257H−00	16 − 59
6K1−82570−07	34 − 1
6K1−82571−01	34 − 2
6K1−82575−00	34 − 5
688−82575−01	31 − 47
703−82577−00	31 − 45
	34 − 4
6K1−8258A−40	34 − 18
61B−8258A−01	34 − 19
688−8258A−20	31 − 49
6E5−82587−00	14 − 44
6E5−82588−00	16 − 45
6K7−82588−00	16 − 44
6N7−82590−14	14 − 30
704−82590−10	32 − 67
703−82591−00	31 − 53
703−82592−00	31 − 54
6E5−82594−00	16 − 49
688−82594−00	16 − 48
703−82594−00	31 − 25
704−82594−00	32 − 37
688−83383−11	34 − 11
703−83383−02	31 − 51
6Y5−8350F−00	33 − 23
6Y5−8350T−01	33 − 1
6Y5−83500−S5	33 − 6
6Y5−83533−T2	33 − 10
6Y5−83553−F1	33 − 25
6Y5−83553−M0	33 − 15
6Y5−83553−00	33 − 15
6N7−83557−00	14 − 18
6Y5−83557−00	33 − 21

PART NO.	REF. NO.
6Y5−83557−10	33 − 21
6Y5−83557−31	33 − 11
6E5−83558−00	24 − 17
6E5−83558−10	23 − 12
6Y5−83570−S5	33 − 7
6K1−83614−01	34 − 7
6R3−83614−00	14 − 45
6K1−83623−41	12 − 22
6A1−83625−41	12 − 20
6A1−83625−51	12 − 19
64E−83672−02	19 − 3
6Y5−83728−00	33 − 12
72X−85075−L0	21 − 21
6N7−85510−00	12 − 2
6N7−85537−00	13 − 8
6N7−85540−01	13 − 5
6N7−85542−01−1S	13 − 1
6N7−85550−00	12 − 1
6R3−85570−01	14 − 1
6E5−85580−00	12 − 3
6E5−85711−40	8 − 46
6E5−85711−50	8 − 46
6E5−85720−04	8 − 15
6R3−85721−30	8 − 16
6R3−85721−80	8 − 16
6G7−85730−04	8 − 27
6E5−85740−02	8 − 41
6Y5−85752−01	33 − 26
6K1−85830−01	34 − 12
6N7−86110−00	14 − 20
6N7−86112−00	14 − 25
6N7−86116−00	14 − 21
6Y5−87122−S0	33 − 14
	33 − 24
6G5−87149−10	14 − 12
9E450−04433	33 − 2
9E450−04533	33 − 3
90101−09M70	29 − 9
90101−12M03	18 − 41
90101−12M05	18 − 41
90101−12M77	18 − 41
90105−10M00	24 − 15
	26 − 15
90105−10M20	2 − 11
90109−06M39	7 − 6
90109−06M40	7 − 5
90109−08M45	16 − 7
90109−08022	3 − 24

NUMERICAL INDEX

PART NO.	REF. NO.
90109−12M37	19 − 35
90109−14M34	19 − 20
90116−06M30	5 − 13
90116−08M45	2 − 13
90119−06MA2	2 − 21
	2 − 24
	3 − 7
	3 − 16
	4 − 24
	17 − 37
90119−06MA3	5 − 15
90119−06MA4	4 − 6
90119−06MA5	4 − 18
90119−06MA6	4 − 10
90119−06M10	23 − 16
	25 − 17
90119−06M59	13 − 4
90119−06M65	8 − 33
	8 − 44
90119−08MA3	2 − 17
90119−08MA8	4 − 3
90119−08M14	23 − 33
	25 − 34
	36 − 43
90119−08M22	16 − 37
90119−08M57	15 − 22
90119−08M76	15 − 20
90119−08M77	15 − 21
90119−08M79	22 − 15
90119−08M94	2 − 12
90119−08027	22 − 9
90119−10M89	24 − 7
	26 − 7
90149−05M05	34 − 20
90152−05M07	24 − 12
	26 − 12
90157−06M01	16 − 41
90157−06013	17 − 11
	17 − 26
90158−06002	33 − 27
90159−06M08	13 − 17
90159−06M11	13 − 9
90159−06M14	5 − 30
90169−05M00	16 − 2
90170−09M05	29 − 10
90170−14M06	29 − 6
90170−16M01	23 − 45
	25 − 46

PART NO.	REF. NO.
90170−20137	12 − 6
90171−18M04	24 − 24
	26 − 21
90179−06M24	1 − 13
90179−06M28	5 − 20
90179−06066	19 − 30
90183−05M02	22 − 31
90185−05002	24 − 13
	26 − 13
90185−06M07	17 − 9
90185−09M01	28 − 6
	29 − 11
90185−12M12	19 − 36
90185−22M11	18 − 20
90201−08M13	17 − 21
90201−08M14	20 − 30
90201−08M23	17 − 16
90201−08M54	16 − 35
90201−10M20	28 − 7
90201−10M76	29 − 8
90201−12M05	18 − 43
90201−13M01	18 − 42
90201−14M56	19 − 34
90201−15M58	19 − 21
90201−16M55	19 − 18
90201−21M18	12 − 5
90201−22M01	23 − 21
	25 − 22
90201−23M01	3 − 26
90201−26M00	25 − 50
90201−26M57	19 − 32
90201−26M59	18 − 19
90201−30M92	23 − 66
90201−38M60	19 − 11
90202−05088	7 − 25
90202−08M20	17 − 40
90202−08M44	7 − 19
90202−12092	17 − 20
90202−16061	17 − 54
90202−26M18	19 − 33
90202−32M19	19 − 17
90202−40M47	19 − 7
90206−10M04	17 − 34
90206−13M10	16 − 6
90206−22M19	23 − 22
	25 − 23
90249−06M19	18 − 33
90250−08M07	23 − 55

PART NO.	REF. NO.
90250−08M07	25 − 58
90280−04M05	23 − 29
	25 − 30
	36 − 44
90280−05015	12 − 4
90282−04010	23 − 67
	25 − 73
90340−08002	23 − 6
	25 − 8
90340−14M00	2 − 6
90384−06M07	2 − 8
90384−14M09	2 − 9
90386−06M12	17 − 43
90386−10M16	18 − 31
90386−12089	17 − 17
90386−13M88	16 − 5
90386−16M66	17 − 53
90386−22M13	17 − 19
90386−22M98	18 − 38
	20 − 33
90386−25M31	18 − 18
90386−38M32	19 − 12
90387−06M29	17 − 33
90387−08M16	17 − 18
90387−08M37	16 − 34
90387−10M05	18 − 34
90387−10M61	28 − 3
90430−08020	23 − 8
	25 − 10
	36 − 8
	36 − 22
90430−14115	2 − 7
90445−05M02	8 − 30
90445−07ME8	23 − 11
90445−07ME9	23 − 11
	25 − 13
90445−07MF0	24 − 16
90445−07M24	5 − 11
90445−07M28	5 − 10
90445−07M46	5 − 12
90445−07M72	7 − 11
90445−07M87	7 − 13
90445−07M89	7 − 9
90445−07196	7 − 10
90445−07258	5 − 28
90445−11M10	8 − 13
90445−11M26	8 − 13
90445−11M35	16 − 55

PART NO.	REF. NO.
90445−11M81	8 − 13
90445−12M12	8 − 35
90445−12207	8 − 35
90445−13M01	10 − 2
	11 − 2
	27 − 9
90445−13M35	10 − 4
	27 − 11
90446−15M07	9 − 40
90450−10M07	9 − 42
90464−07M06	7 − 14
90464−12M00	12 − 12
90464−13M34	8 − 40
90465−05M87	14 − 28
90465−06M86	2 − 25
	5 − 16
90465−08M63	18 − 23
90465−08M89	14 − 29
90465−11M10	7 − 8
	8 − 5
	8 − 8
	8 − 14
	8 − 37
	8 − 39
	9 − 3
	9 − 4
	9 − 14
	9 − 15
	9 − 33
	9 − 34
	9 − 38
	9 − 39
	16 − 56
	18 − 21
	19 − 5
	24 − 18
	33 − 13
	33 − 22
90465−12M25	16 − 50
90465−13M11	8 − 17
	8 − 26
90465−13M18	4 − 26
	14 − 19
	14 − 42
90467−08004	4 − 17
90468−05M03	7 − 24
90468−07M02	7 − 15
90468−18008	17 − 41

PART NO.	REF. NO.
90480−06M19	11 − 4
	16 − 2
90480−12M11	12 − 17
90480−20M05	4 − 21
90480−22M15	16 − 33
90501−11M10	23 − 19
	25 − 20
90501−12082	17 − 48
90501−16M11	4 − 20
90501−16M12	17 − 12
90501−16M28	19 − 28
90501−16M37	23 − 51
	25 − 54
90506−14M24	18 − 36
90508−29M12	17 − 22
90560−12M01	28 − 4
91490−40030	24 − 25
	26 − 22
91609−30010	14 − 22
91690−30012	17 − 3
91690−30016	7 − 27
91690−30020	18 − 35
92780−06020	32 − 30
92903−06100	9 − 11
92903−06600	12 − 8
	13 − 12
	13 − 15
	13 − 19
92903−08600	17 − 46
92990−04100	33 − 4
	33 − 8
92990−04600	1 − 15
92990−05100	34 − 9
	34 − 23
92990−05300	32 − 41
92990−05600	5 − 5
	34 − 22
92990−06100	1 − 3
	34 − 15
92990−06200	17 − 8
92990−06300	32 − 51
92990−06600	8 − 22
	13 − 7
	16 − 42
	18 − 12
	34 − 16
92990−08200	16 − 8
92990−08600	15 − 23

PART NO.	REF. NO.
92990−08600	31 − 34
92990−18200	24 − 23
	26 − 20
92995−06100	18 − 5
92995−06600	1 − 8
	5 − 18
	9 − 31
	12 − 15
	14 − 3
	14 − 7
	14 − 17
	14 − 24
	14 − 38
	14 − 41
	16 − 13
	16 − 23
	16 − 27
	16 − 32
	16 − 39
	16 − 47
	16 − 52
	18 − 8
	22 − 7
92995−08100	17 − 5
	18 − 17
	22 − 17
	22 − 19
92995−08600	15 − 25
	22 − 24
	22 − 28
	22 − 35
	23 − 42
	25 − 43
92995−10100	19 − 26
	19 − 40
	24 − 6
	26 − 6
92995−14600	19 − 23
93101−22M15	3 − 14
	35 − 13
93101−28M16	23 − 35
	25 − 36
	36 − 14
	36 − 31
93101−30M17	23 − 63
	25 − 70
	36 − 17
	36 − 34

NUMERICAL INDEX

PART NO.	REF. NO.
93102−08M43	21 − 36
93102−35M13	3 − 13
	35 − 12
93102−40M14	3 − 5
	35 − 10
93106−09014	23 − 15
	25 − 16
	36 − 10
	36 − 27
93210−03261	14 − 26
93210−08287	10 − 7
	27 − 14
93210−09165	17 − 52
93210−10M74	20 − 4
93210−13M04	7 − 18
93210−16275	28 − 9
93210−19MA7	7 − 4
93210−32738	9 − 8
93210−37MH7	19 − 6
93210−37160	23 − 27
	25 − 28
	36 − 12
	36 − 28
	36 − 38
93210−55M14	23 − 39
	25 − 40
	36 − 15
	36 − 32
93210−58144	23 − 14
	25 − 15
	36 − 9
	36 − 26
93210−74M35	3 − 15
	35 − 14
93210−86M38	23 − 26
	25 − 27
	36 − 11
	36 − 29
	36 − 37
93210−86M39	23 − 64
	25 − 71
	36 − 16
	36 − 33
93211−04001	3 − 6
	35 − 11
93306−208U0	3 − 10
	23 − 59
93310−323V6	3 − 25

PART NO.	REF. NO.
93310−836U0	3 − 27
93310−954U1	3 − 8
93311−940U3	3 − 4
93315−345W0	25 − 4
93315−425U7	23 − 47
	25 − 48
93315−430U8	23 − 62
93315−430V5	25 − 64
93315−440V6	25 − 68
93315−628U9	23 − 3
	25 − 3
93317−330U2	23 − 36
	25 − 37
93317−330U5	25 − 69
93332−000U7	23 − 4
93332−000V7	25 − 62
93341−360U8	25 − 5
93341−440U5	25 − 66
93341−930V2	23 − 38
	25 − 39
93410−16006	17 − 55
93410−22M11	18 − 39
93410−37M04	19 − 14
93410−40M03	3 − 11
93420−36M01	22 − 37
93430−06024	31 − 10
	32 − 6
93501−04M02	17 − 47
93503−16003	23 − 54
	25 − 57
93507−32009	23 − 52
	25 − 55
93511−32017	23 − 53
	25 − 56
93606−12019	23 − 32
	25 − 33
	36 − 42
93608−12M05	22 − 8
	22 − 13
	24 − 4
	26 − 4
93608−12063	2 − 10
93700−06M03	17 − 50
	18 − 13
	18 − 24
94702−00247	4 − 27
94702−00309	4 − 27
95303−06600	17 − 13

PART NO.	REF. NO.
95303−06600	17 − 27
95380−03600	9 − 27
95380−04600	33 − 5
	33 − 9
95380−05600	7 − 22
	17 − 24
	17 − 30
	31 − 7
	32 − 23
	34 − 10
	34 − 21
95380−06600	1 − 4
	8 − 23
	31 − 40
	32 − 42
	34 − 14
95380−08600	9 − 12
95380−08700	22 − 18
95380−12600	18 − 44
95380−14700	29 − 7
95380−14800	19 − 22
95780−10300	19 − 9
97013−06012	13 − 18
97013−06014	9 − 10
97013−06016	13 − 11
97013−06025	13 − 14
97013−06065	12 − 7
97013−08030	17 − 45
97013−08045	17 − 15
97075−08035	16 − 36
97075−10045	24 − 5
	26 − 5
97080−06100	8 − 21
97080−08016	20 − 31
97095−06010	16 − 26
	18 − 7
	18 − 28
	22 − 6
97095−06012	1 − 7
	5 − 17
	14 − 6
	14 − 37
	14 − 40
	14 − 46
	16 − 51
97095−06016	14 − 16
	16 − 12
	16 − 22

PART NO.	REF. NO.
97095−06020	14 − 2
	16 − 31
	16 − 38
	16 − 46
97095−06025	17 − 35
97095−06030	14 − 23
	18 − 4
97095−06050	9 − 30
97095−08016	15 − 24
97095−08020	17 − 4
	18 − 16
97095−08025	23 − 41
	25 − 42
97095−08030	22 − 23
97095−08045	22 − 16
	22 − 27
	22 − 34
97095−10045	19 − 25
	19 − 39
97380−05025	31 − 8
97380−06018	32 − 20
97380−08030	31 − 33
97607−04310	21 − 32
97780−40520	1 − 16
97780−60525	19 − 2
97880−05025	5 − 4
97880−06012	18 − 11
97880−06018	12 − 11
97880−06020	13 − 6
97885−06010	12 − 14
97885−06016	19 − 4
	19 − 29
97890−05016	32 − 2
97890−05025	32 − 16
97890−06018	32 − 50
97980−05108	6 − 24
97980−05116	6 − 22
98580−03015	31 − 38
98580−04006	31 − 36
	32 − 32
98580−04010	31 − 35
98580−05010	31 − 37
98586−05016	27 − 4
98780−04015	2 − 15
98780−05018	32 − 33
98980−05010	34 − 8
98980−06020	34 − 13
99001−08600	23 − 18

PART NO.	REF. NO.
99001−08600	25 − 19

PART NO.	REF. NO.

115TRB/130TRB/
115CETO/130BETO/L130BETO
PARTS CATALOGUE

©2002 by Yamaha Motor Co., Ltd.

1st Edition, May 2002

All rights reserved.
Any reprinting or unauthorized use
without the written permission of
Yamaha Motor Co., Ltd.
is expressly prohibited.

G7