YAMAHA

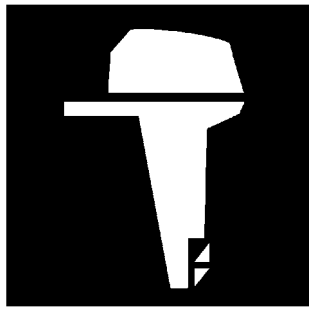

PARTS CATALOGUE
CATALOGO DE REPUESTOS

225F'04 (65J3)
250B'04 (65L3)
L225F'04 (65K3)
L250B'04 (65M3)

1C65J-200S1

(2C65J-200S1)

YAMAHA
GENUINE
Parts & Accessories

FOREWORD

This Parts Catalogue is related to the parts for the model(s) on the cover page. When you are ordering replacement parts, please refer to this Parts Catalogue and quote both part numbers and part names correctly.

1. Modifications or additions which have been made after the issue of the Parts Catalogue will be announced in the Parts News.
   It is advisable that you make the necessary corrections to the Parts Catalogue according to the Parts News.

2. Abbreviations
   The following abbreviations are used in this Parts Catalogue.

   "UR" Use specified parts number.
   "UN" Use as many as needed.
   "AP" Alternate Parts
   "LM" Locally Made (Parts need to be ordered locally)
   "F#" Frame No. (Applicable machine No.)
   "O/S" Over Size

3. The number of components for assembly
   - Parts, which are to be supplied in an assembly, are listed with a dot (.) in front of the part name as shown below.
   - The numeral appearing to the right of each component part indicates the quantity of parts for each assembly unit.

PART NO.	DESCRIPTION	Q'TY	REMARKS
2F5–83310–60	FRONT FLASHER LIGHT ASSY	2	
115–83311–60	.BULB (6V–18W)	1	

4. Applicable colours of graphics are represented in the "REMARKS" as shown below.

PART NO.	DESCRIPTION	Q'TY	REMARKS
2N4–24110–00–X5	FUEL TANK COMP.	2	MXR
3J1–24240–10	.GRAPHIC, FUEL TANK	1	FOR MXR

5. Note that the illustrations for reference in finding parts numbers are not to be used for assembling. When assembling, please use the applicable service manual.

6. The asterisk (*) before a reference number indicates modified items after the first edition.

7. Applicable Serial No.

   Engine Serial No.

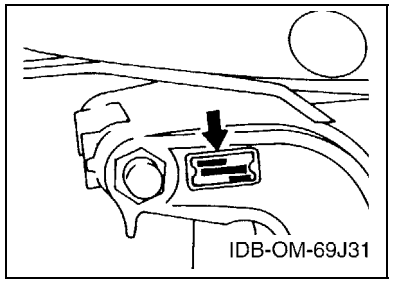

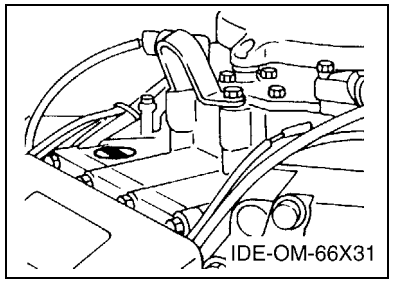

8. Applicable Engine Starting Serial No.

Model	Serial No.	Model	Serial No.
225F	62J-1000044	250B	61A-1000640
L225F	62K-1000006	L250B	61B-1000421

9. Applicable Colour Code

Abbreviation	Colour Name	Colour Code
DBNM2	DARK BLUISH GRAY METALLIC 2	004D

10. Quantity Column Information

Column No.	Name Of Q'ty Column	Applicable Model
1	65J3	225FETO
2	65L3	250BETO
3	65K3	L225FETO
4	65M3	L250BETO

PROLOGO

Este catálogo de repuestos corresponde a las piezas para el o los modelos que figuran en la página de portada. Al formular el pedido de repuestos, se ruega citar este catálogo y especificar correctamente el número y el nombre de las piezas.

1. Las modificaciones y agregados que se hayan realizado después de la edición de este Catálogo de Repuestos, serán anunciados en las Informaciones de Recambios.
   Es recomendable que se hagan las correcciones necesarias en el Catálogo de Repuestos de acuerdo con las Informaciones de Recambios.

2. Abreviaciones
   En este. Catálogo de Repuestos se emplean las siguientes abreviaciones.

   "UR" Usar el número de partes especificado
   "UN" Usar la cantidad necesaria
   "AP" Piezas sustitutivas
   "LM" Fabricación local (Hay que pedir los repuestos en las cercanías)
   "F#" Nº de bastidor (Nº aplicable a la máquina)
   "O/S" Sobredimensionado

3. La cantidad de componentes para el montaje
   - Los componentes, suministrados como conjunto, se describen con un punto (.) que precede al nombre del parte como se indica a continuación.
   - La numeración que aparece a la derecha de cada descripción indica la cantidad de partes por cada unidad de conjunto.

CODIGO Nº	DESCRIPCION	CANT.	OBSERVACIONES
2F5–83310–60	ENSAMBLAJE DE LA LUZ	2	
115–83311–60	.BOMBILLA (6V–18W)	1	

4. Los colores de los componentes se indican como sigue en la columna de "OBSERVACIONES".

CODIGO Nº	DESCRIPCION	CANT.	OBSERVACIONES
2N4–24110–00–X5	COMP. DEL TANQUE	2	MXR
3J1–24240–10	.GRAFICO, DEL TANQUE	1	PARA MXR

5. Debe tenerse en cuenta que las ilustraciones sirven como guia para la búsqueda de los números de partes y no deben usarse para el montaje. Durante el montaje, se recomienda usar el manual de taller correspondiente.

6. EL asterisco (*) antes del número de referencia indica los elementos modificados después de la primera edición.

7. Números de serie

   Nº de Serie del motor

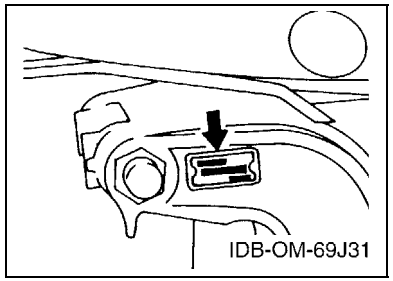

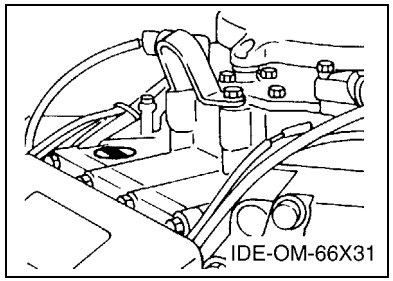

8. Números de serie del motor

Modelo	Nº de serie	Modelo	Nº de serie
225F	62J-1000044	250B	61A-1000640
L225F	62K-1000006	L250B	61B-1000421

9. Códigos de color aplicables

Abreviatura	Nombre de color	Código de color
DBNM2	DARK BLUISH GRAY METALLIC 2	004D

10. Informacion para la columna de cantidades

Columna Nº	Nombre de la columna de cantidades	Modelo aplicable
1	65J3	225FETO
2	65L3	250BETO
3	65K3	L225FETO
4	65M3	L250BETO

CONTENTS

SHEET1/2
TOP COWLING A4
CYLINDER & CRANKCASE 1 ..... A6
CRANKSHAFT & PISTON B1
CYLINDER & CRANKCASE 2 ..... B3
FUEL INJECTION PUMP B4
FUEL INJECTION NOZZLE B7
INTAKE C2
OIL PUMP C3
OIL TANK C4
FUEL 1 ..... C6
FUEL 2 ..... D2
GENERATOR D3
ELECTRICAL 1 ..... D4
ELECTRICAL 2 ..... D5
ELECTRICAL 3 ..... D7
ELECTRICAL 4 ..... E3
STARTING MOTOR E4
BOTTOM COWLING E5
CONTROL F1
BRACKET 1 ..... F4
BRACKET 2 ..... F6

INDEX

NUMERICAL INDEX G1

SHEET2/2
POWER TRIM & TILT ASSY A4*
UPPER CASING B1*
LOWER CASING & DRIVE 1 ..... B3*
LOWER CASING & DRIVE 2 ..... B7*
LOWER CASING & DRIVE 3 ..... C2*
LOWER CASING & DRIVE 4 ..... C6*
FUEL TANK C7*
STEERING GUIDE ATTACHMENT 1 ..... D1*
STEERING GUIDE ATTACHMENT 2 ..... D2*
REMOTE CONTROL BOX D3*
REMOTE CONTROL ASSY 1 ..... D4*
REMOTE CONTROL ASSY 2 ..... D7*
METER E3*
SWITCH & PANEL 1 ..... E5*
SWITCH & PANEL 2 ..... E6*
REPAIR KIT 1 ..... E7*
REPAIR KIT 2 ..... F1*

INDEX

NUMERICAL INDEX G1*

CONTENIDO

PAGINA1/2
SOPORTE SUPERIOR A4
CILINDRO & CARTER 1 ..... A6
CIGUENAL & PISTON B1
CILINDRO & CARTER 2 ..... B3
BOMBA DE COMBUSTIBLE B4
INJECTOR DE COMBUSTIBLE B7
ADMISION C2
BOMBA DE ACEITE C3
COMPONER Y PODER VARILLA C4
COMBUSTIBLE 1 ..... C6
COMBUSTIBLE 2 ..... D2
GENERADOR D3
EQUIPO ELECTRICO 1 ..... D4
EQUIPO ELECTRICO 2 ..... D5
EQUIPO ELECTRICO 3 ..... D7
EQUIPO ELECTRICO 4 ..... E3
MOTOR DE ARRANQUE E4
CUBIERTA INFERIOR E5
CONTROL F1
SOPORTE 1 ..... F4
SOPORTE 2 ..... F6

INDICE

INDICE NUMERICO G1

PAGINA2/2
COMPONER Y PODER VARILLA A4*
FUNDA SUPERIOR B1*
IMPULSOR E INFERIOR 1 ..... B3*
IMPULSOR E INFERIOR 2 ..... B7*
IMPULSOR E INFERIOR 3 ..... C2*
IMPULSOR E INFERIOR 4 ..... C6*
DEPOSITO DE COMBUSTIBLE C7*
ADITAMENTO GUIA DE GOBIERNO 1 ..... D1*
ADITAMENTO GUIA DE GOBIERNO 2 ..... D2*
CONTROL REMOTO COMPLETO D3*
CONTROL REMOTO COMPL 1 ..... D4*
CONTROL REMOTO COMPL 2 ..... D7*
MEDIDOR E3*
PANEL DE INTERRUPTOR 1 ..... E5*
PANEL DE INTERRUPTOR 2 ..... E6*
ESTUCHE REPARATION 1 ..... E7*
ESTUCHE REPARATION 2 ..... F1*

INDICE

INDICE NUMERICO G1*

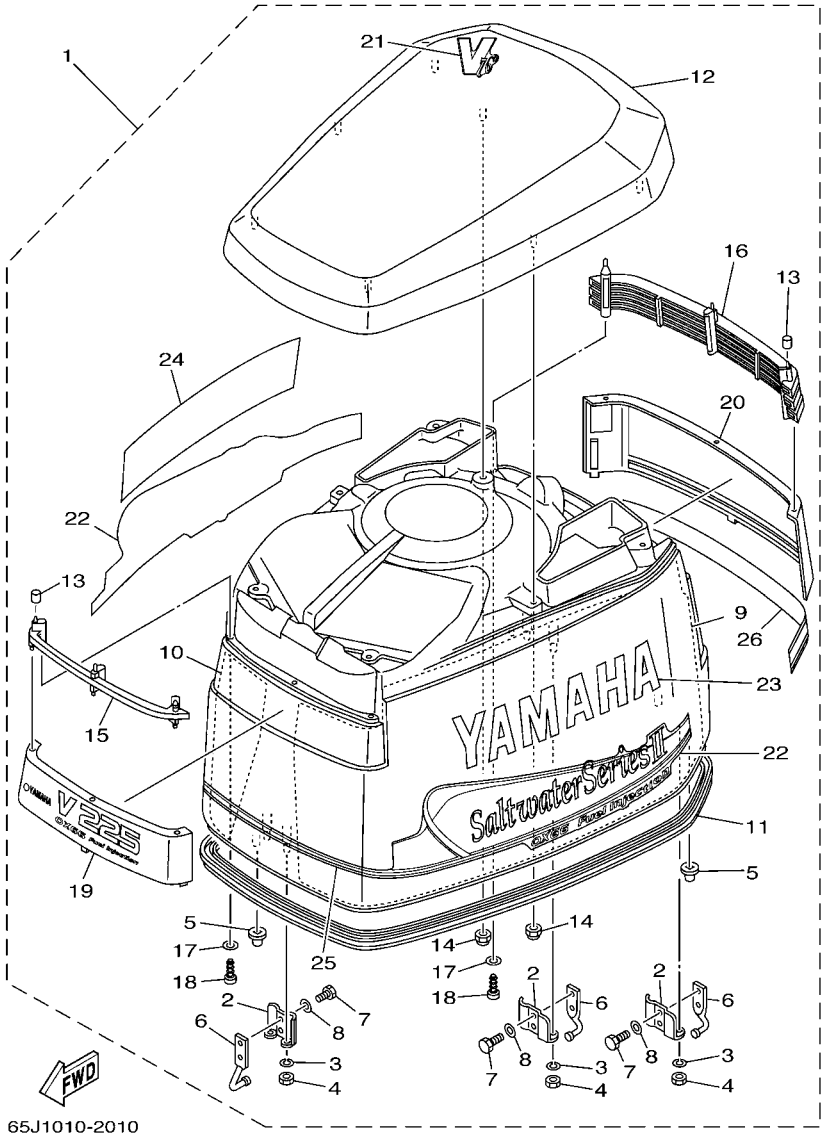

FIG. 1 TOP COWLING — SOPORTE SUPERIOR

REF. NO.	PART NO. CODIGO Nº	DESCRIPTION DESCRIPCION	65J3	65L3	65K3	65M3		REMARKS OBSERVACIONES
1	65J–42610–T0–4D	TOP COWLING ASSY SOPORTE SUPERIOR COMPL.	1		1			
	65L–42610–T0–4D	TOP COWLING ASSY SOPORTE SUPERIOR COMPL.		1		1		
	65L–42610–00–4D	TOP COWLING ASSY SOPORTE SUPERIOR COMPL.		1		1		FOR BRA FOR BRA
2	6R3–42647–00	.HOLDER, CLAMP BAND .MORDAZA DE ABRAZADERA	3	3	3	3		
3	92990–06100	.WASHER, SPRING .ARANDELA PLANA	6	6	6	6		
4	95380–06600	.NUT, HEXAGON .TUERCA	6	6	6	6		
5	6R3–42662–00	.DAMPER .AMORTIGUADOR	3	3	3	3		
6	6R3–42814–00	.HOOK, CLAMP .GANCHO GRAMPA	3	3	3	3		
7	97095–06012	.BOLT .PERNO	6	6	6	6		
8	92995–06600	.WASHER .ARANDELA	6	6	6	6		
9	61A–42619–02	.DAMPER, FORM .HULE DE FORMA	1	1	1	1		
10	61A–42627–02	.DAMPER, FORM .AMORTIGUADOR FORMA 3	1	1	1	1		
11	61A–42615–01	.SEAL .SELLO	1	1	1	1		
12	61A–42613–01–4D	.MOLDING, AIR DUCT .MOLDURA CONDUCTO AIRE	1	1	1	1		
13	90385–04M05	.BUSH .BUJE	6	6	6	6		
14	90179–06M24	.NUT .TUERCA	7	7	7	7		
15	61A–42626–00	.LOUVER, 1 .AMORTIGUADOR 1	1	1	1	1		
16	61A–42636–00	.LOUVER 2 .REJILLA 2	1	1	1	1		
17	92990–04600	.WASHER, PLATE .ARANDELA PLANA	6	6	6	6		
18	97780–40520	.SCREW, TAPPING .TORNILLO DE CABEZA DE CONO AC	6	6	6	6		
19	65J–42686–T0	.EMBLEM, FRONT .EMBLEMA DEL FRENTE	1		1			
	65L–42686–T0	.EMBLEM, FRONT .EMBLEMA DEL FRENTE		1		1		
	65L–42686–00	.EMBLEM, FRONT .EMBLEMA DEL FRENTE		1		1		FOR BRA FOR BRA
20	65J–42687–S0	.EMBLEM, REAR .EMBLEMA TRASERO	1		1			
	65L–42687–S0	.EMBLEM, REAR .EMBLEMA TRASERO		1		1		
	65L–42687–V0	.EMBLEM, REAR .EMBLEMA TRASERO		1		1		FOR BRA FOR BRA
21	65J–42683–S0	.MARK, COWLING .MARCA DE CUBIERTA	1		1			

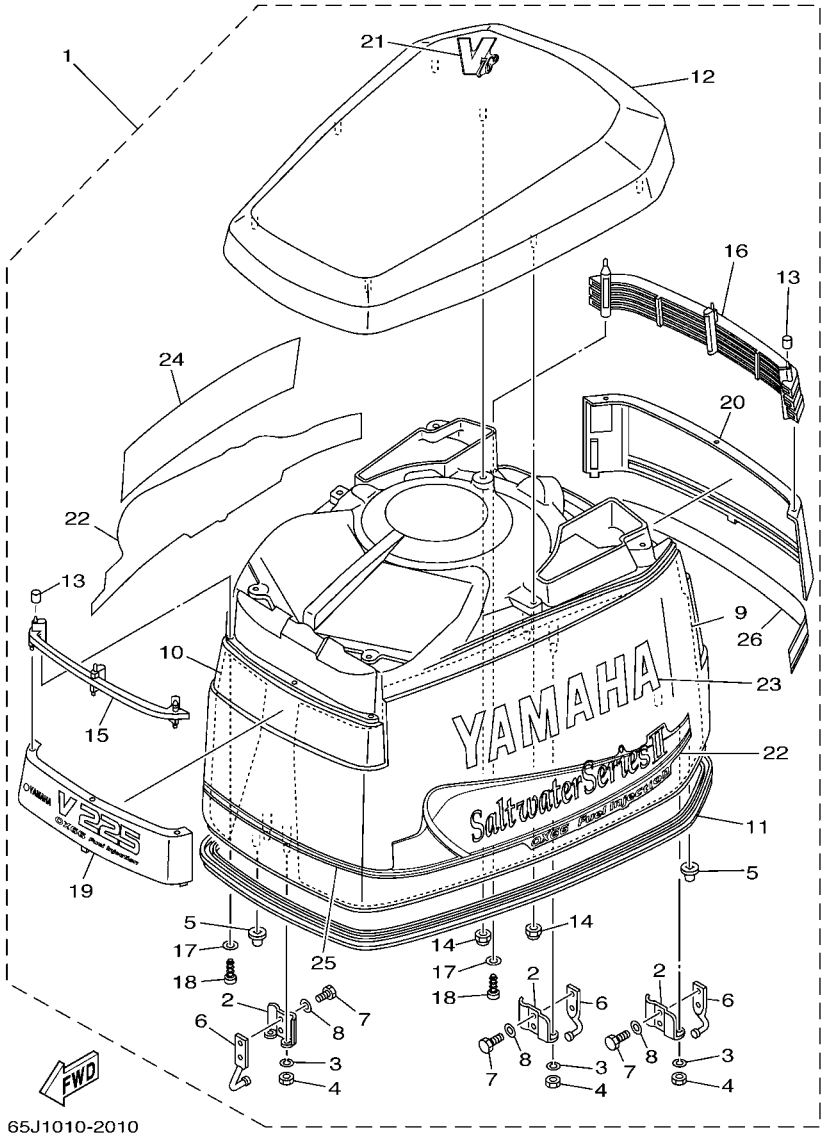

FIG. 1 TOP COWLING — SOPORTE SUPERIOR

REF. NO.	PART NO. CODIGO Nº	DESCRIPTION DESCRIPCION	65J3	65L3	65K3	65M3		REMARKS OBSERVACIONES
21	65L–42683–S0	.MARK, COWLING .MARCA DE CUBIERTA		1		1		
22	61A–W0070–S1	.GRAPHIC SET .JUEGO DE EMBLEMA	1	1	1	1		
	65L–W0070–V0	.GRAPHIC SET .JUEGO DE EMBLEMA		1		1		FOR BRA FOR BRA
23	62J–42681–S1	.MARK, COWLING .MARCA DE CUBIERTA	1		1			
	61A–42681–S1	.MARK, COWLING .MARCA DE CUBIERTA		1		1		
24	62J–42682–S1	.MARK, COWLING .MARCA DE CUBIERTA	1		1			
	61A–42682–S1	.MARK, COWLING .MARCA DE CUBIERTA		1		1		
25	61A–42677–S1	.GRAPHIC, FRONT .CALCAMONIA FRONTAL	1	1	1	1		
26	61A–4267A–S1	.GRAPHIC, REAR 2 .CALCAMONIA TRASERA 2	1	1	1	1		

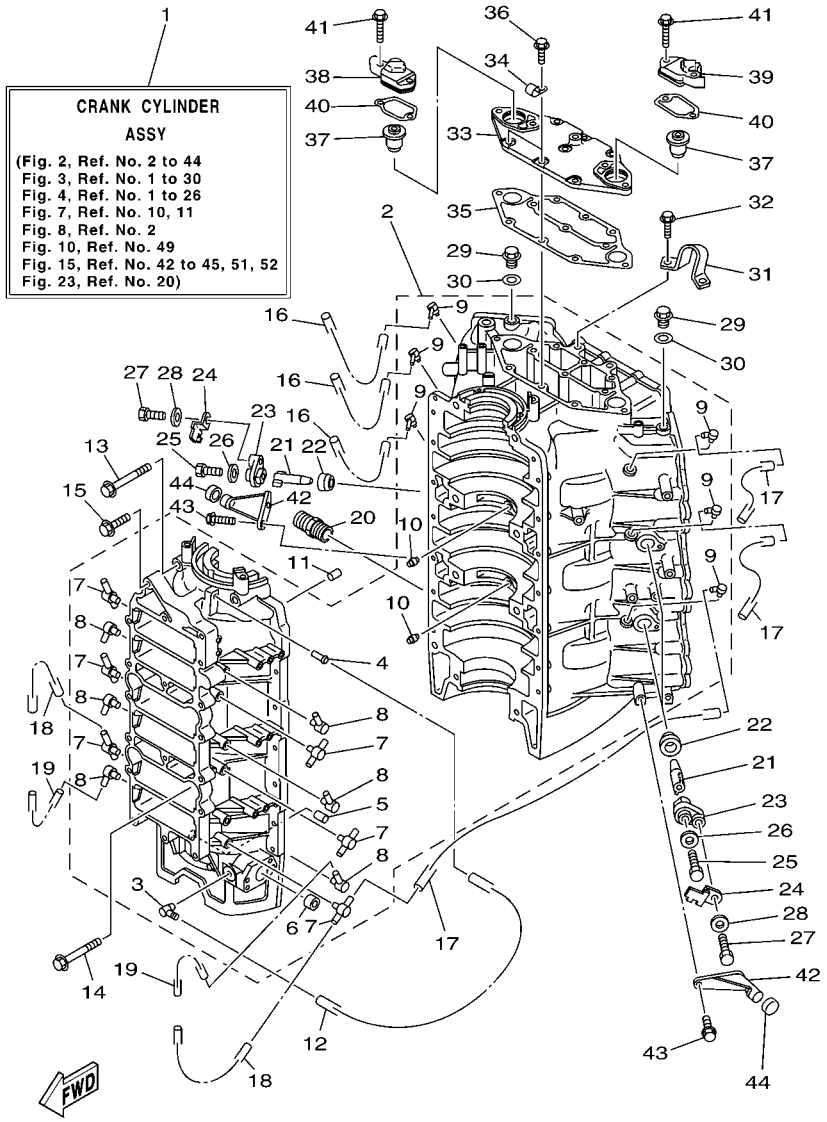

FIG. 2 CYLINDER & CRANKCASE 1 CILINDRO & CARTER 1

REF. NO.	PART NO. CODIGO Nº	DESCRIPTION DESCRIPCION	65J3	65L3	65K3	65M3		REMARKS OBSERVACIONES
1	65J–W0090–14–1S	CRANK CYLINDER ASSY BLOQUE MOTOR COMPLETO	1		1			
	65L–W0090–14–1S	CRANK CYLINDER ASSY BLOQUE MOTOR COMPLETO		1		1		
2	65J–15100–03–1S	CRANKCASE ASSY CARTER COMPLETO	1		1			
	65L–15100–03–1S	CRANKCASE ASSY CARTER COMPLETO		1		1		
3	6E5–11372–01	.NIPPLE, HOSE .NIPLE DE MANGUERA	1	1	1	1		
4	624–14485–00	.PIPE, JOINT .TUBO DE UNION	1	1	1	1		
5	90384–06M07	.BUSH, BIMETAL FORMED .BUJE BIMETALICO	1	1	1	1		
6	90383–16M01	.BUSH, FORMED .BUJE	1	1	1	1		
7	6F6–11372–01	.NIPPLE, HOSE .NIPLE DE MANGUERA	6	6	6	6		
8	650–11372–01	.NIPPLE, HOSE .NIPLE DE MANGUERA	6	6	6	6		
9	6E5–11372–01	.NIPPLE, HOSE .NIPLE DE MANGUERA	6	6	6	6		
10	663–11518–01	.LOCK, BEARING .SEGURO BALERO	2	2	2	2		
11	93608–12063	PIN, DOWEL PASADOR DE CLAVIJA	2	2	2	2		
12	90445–07M11	HOSE (L610) TUBO (L610)	1	1	1	1		
13	90105–10M62	BOLT, FLANGE TORNILLO	4	4	4	4		
14	90105–10M75	BOLT, FLANGE TORNILLO	4	4	4	4		
15	90119–06089	BOLT, WITH WASHER TORNILLO CON ARANDELA	14	14	14	14		
16	90445–07M44	HOSE (L250) TUBO (L250)	3	3	3	3		
17	90445–07M40	HOSE (L225) TUBO (L225)	3	3	3	3		
18	90445–07MA6	HOSE (L90) TUBO (L90)	6	6	6	6		
19	90445–07MA6	HOSE (L90) TUBO (L90)	6	6	6	6		
20	6G5–12581–00	JOINT, HOSE 1 CONEXION	1	1	1	1		
21	62Y–11325–00	ANODE ANODO	3	3	3	3		
22	66M–11328–00	GROMMET, ANODE TAPON	3	3	3	3		
23	66M–11327–00–94	COVER, ANODE CUBIERTA	3	3	3	3		
24	66M–12535–00	PLATE EMPAQUETADURA	3	3	3	3		
25	97095–05012	BOLT PERNO	3	3	3	3		

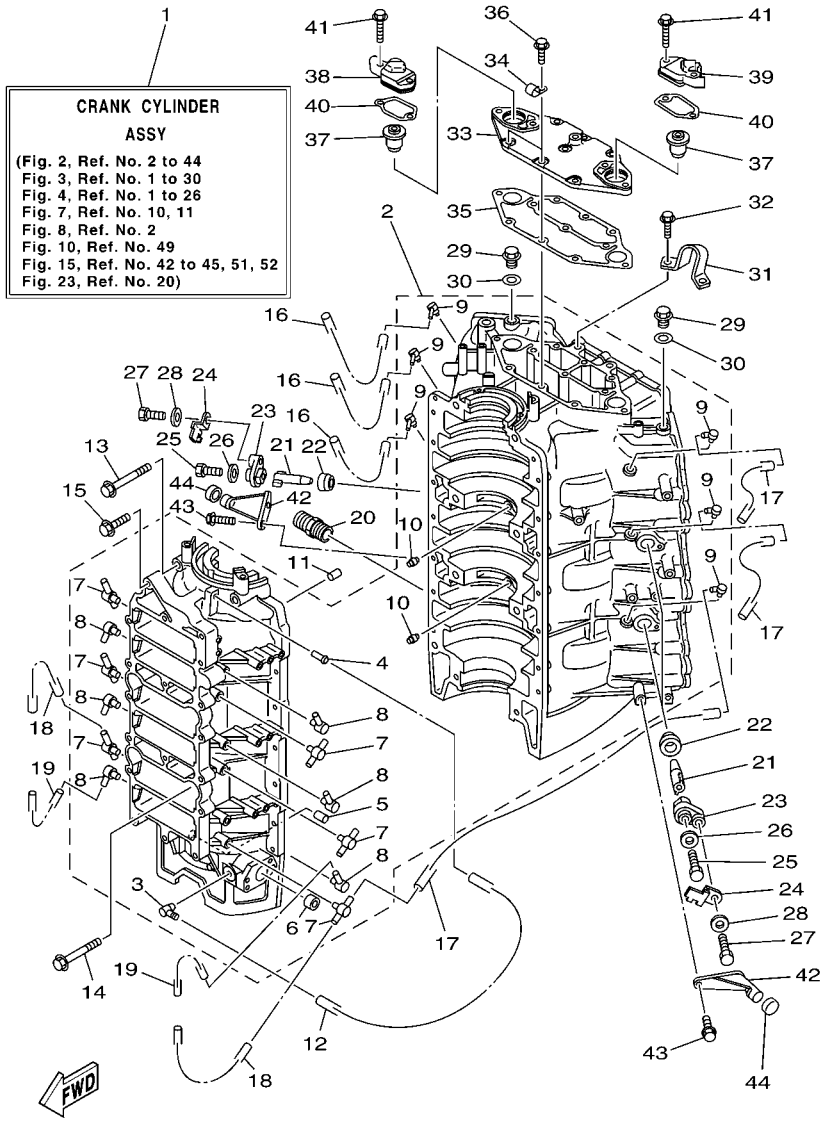

FIG. 2 CYLINDER & CRANKCASE 1 CILINDRO & CARTER 1

REF. NO.	PART NO. CODIGO Nº	DESCRIPTION DESCRIPCION	65J3	65L3	65K3	65M3		REMARKS OBSERVACIONES
26	92995–05600	WASHER ARANDELA	3	3	3	3		
27	97013–06020	BOLT PERNO	3	3	3	3		
28	92903–06600	WASHER, PLATE RONDANA SENCILLA	3	3	3	3		
29	90340–14M00	PLUG, STRAIGHT SCREW TORNILLO, DE DRENAJE	2	2	2	2		
30	90430–14115	GASKET JUNTA	2	2	2	2		
31	6E5–11119–01	HANGER, ENGINE SOPORTE DEL MOTOR	1	1	1	1		
32	90119–08MA3	BOLT, WITH WASHER TORNILLO CON ARANDELA	2	2	2	2		
33	61A–11371–00–1S	COVER CUBIERTA 1	1	1	1	1		
34	90465–06M86	CLAMP BRIDA	2	2	2	2		
35	61A–11381–A0	GASKET 1 EMPAQUE 1	1	1	1	1		
36	90119–06MA2	BOLT, WITH WASHER TORNILLO CON ARANDELA	7	7	7	7		
37	6E5–12411–30	THERMOSTAT TERMOSTAT	2	2	2	2		
38	61A–12413–21–1S	COVER, THERMOSTAT CUBIERTA TERMOSTATO	1	1	1	1		
39	61A–12413–31–1S	COVER, THERMOSTAT CUBIERTA TERMOSTATO	1	1	1	1		
40	61A–12414–A0	GASKET, COVER EMPAQUE	2	2	2	2		
41	90119–06MA5	BOLT, WITH WASHER TORNILLO CON ARANDELA	4	4	4	4		
42	6E5–42761–00–1S	STOPPER RETEN 1	2	2	2	2		
43	90119–06MA2	BOLT, WITH WASHER TORNILLO CON ARANDELA	4	4	4	4		
44	68F–44533–00	DAMPER, UPPER MOUNT RUBBER AMORTIGUADOR SUPERIOR	2	2	2	2		

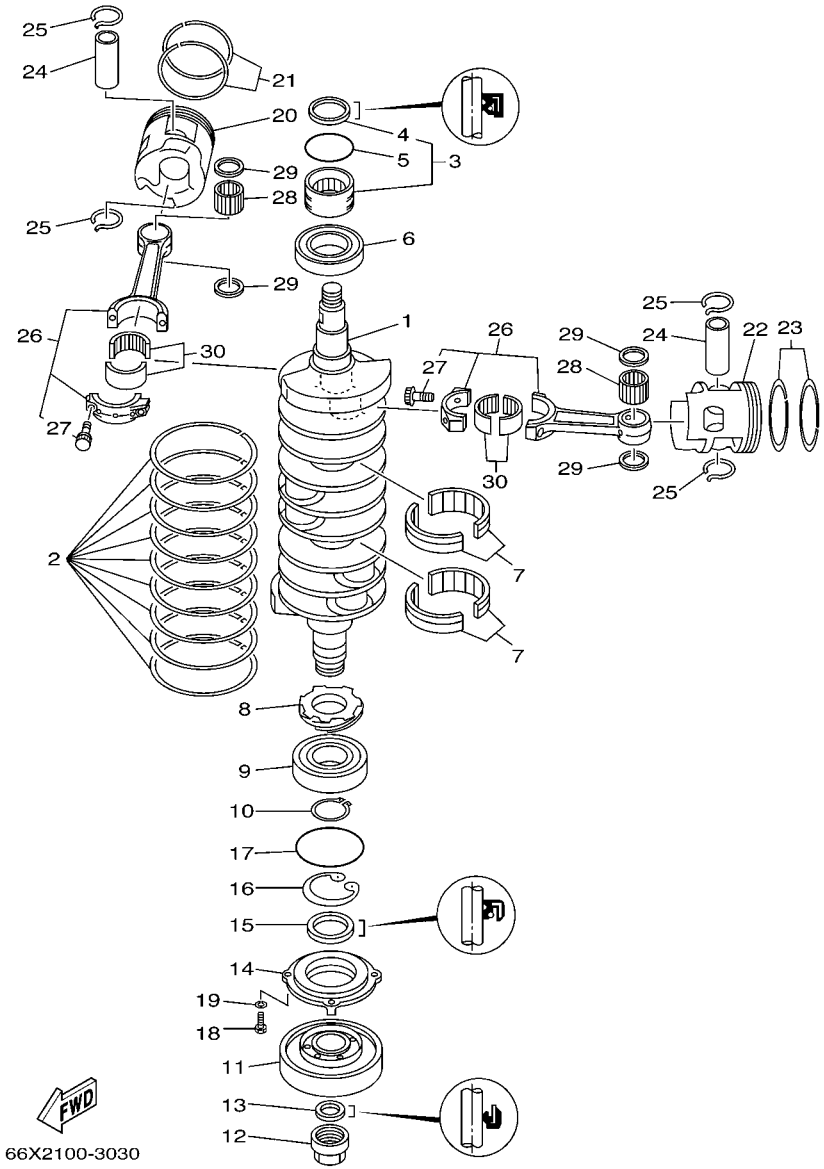

FIG. 3 CRANKSHAFT & PISTON — CIGUENAL & PISTON

REF. NO.	PART NO. CODIGO Nº	DESCRIPTION DESCRIPCION	65J3	65L3	65K3	65M3		REMARKS OBSERVACIONES
1	6D0–11411–00	CRANKSHAFT CIGUENAL	1	1	1	1		
2	61A–11447–00	SEAL, CRANK SELLO MANIVELA	9	9	9	9		
3	93311–940V0	BEARING COJINETE DE RODILLOS	1	1	1	1		
4	93102–40M38	.OIL SEAL .SELLO ACEITE	1	1	1	1		
5	93210–54M54	O-RING ANILLO O	1	1	1	1		
6	93306–209U1	BEARING COJINETE	1	1	1	1		
7	93310–959U0	BEARING COJINETE DE RODILLOS	2	2	2	2		
8	61A–11536–00	GEAR, DRIVE ENGRANAJE TRACCION	1	1	1	1		
9	93306–308U0	BEARING COJINETE	1	1	1	1		
10	93410–40M03	CIRCLIP SEGURO	1	1	1	1		
11	61A–11586–01	PULLEY, CRANKSHAFT BALANCE POLEA EQUILIBR. DE CIGUENAL	1	1	1	1		
12	60V–11555–00	NUT, CRANKSHAFT 1 TUERCA CIGUENAL 1	1	1	1	1		
13	93104–22M07	OIL SEAL SELLO ACEITE	1	1	1	1		
14	61A–15359–00–94	HOUSING, OIL SEAL CAJA DE SELLO DE ACEITE	1	1	1	1		
15	93102–40M36	OIL SEAL SELLO ACEITE	1	1	1	1		
16	93420–61M07	CIRCLIP SEGURO	1	1	1	1		
17	93210–81MA6	O-RING ANILLO O	1	1	1	1		
18	97095–06020	BOLT PERNO	4	4	4	4		
19	92995–06100	WASHER, SPRING ARANDELA	4	4	4	4		
20	69L–11631–00–85	PISTON (STD) PISTON (NORMA)	3	3	3	3		
	69L–11635–00	PISTON (0.25MM O/S) PISTON (0.25MM O/S)	3	3	3	3		AP AP
	69L–11636–00	PISTON (0.50MM O/S) PISTON (0.50MM O/S)	3	3	3	3		AP AP
21	64D–11603–01	PISTON RING SET (STD) JUEGO DE ANILLOS (NORMA)	3	3	3	3		
	64D–11604–01	PISTON RING SET (0.25MM O/S) JUEGO DE ANILLOS (0.25MM O/S)	3	3	3	3		AP AP
	64D–11605–01	PISTON RING SET (0.50MM O/S) JUEGO DE ANILLOS (0.50MM O/S)	3	3	3	3		AP AP
22	69L–11642–00–85	PISTON 2 (STD) PISTON 2 (NORMA)	3	3	3	3		
	69L–11645–00	PISTON 2 (0.25MM O/S) PISTON 2 (0.25MM O/S)	3	3	3	3		AP AP

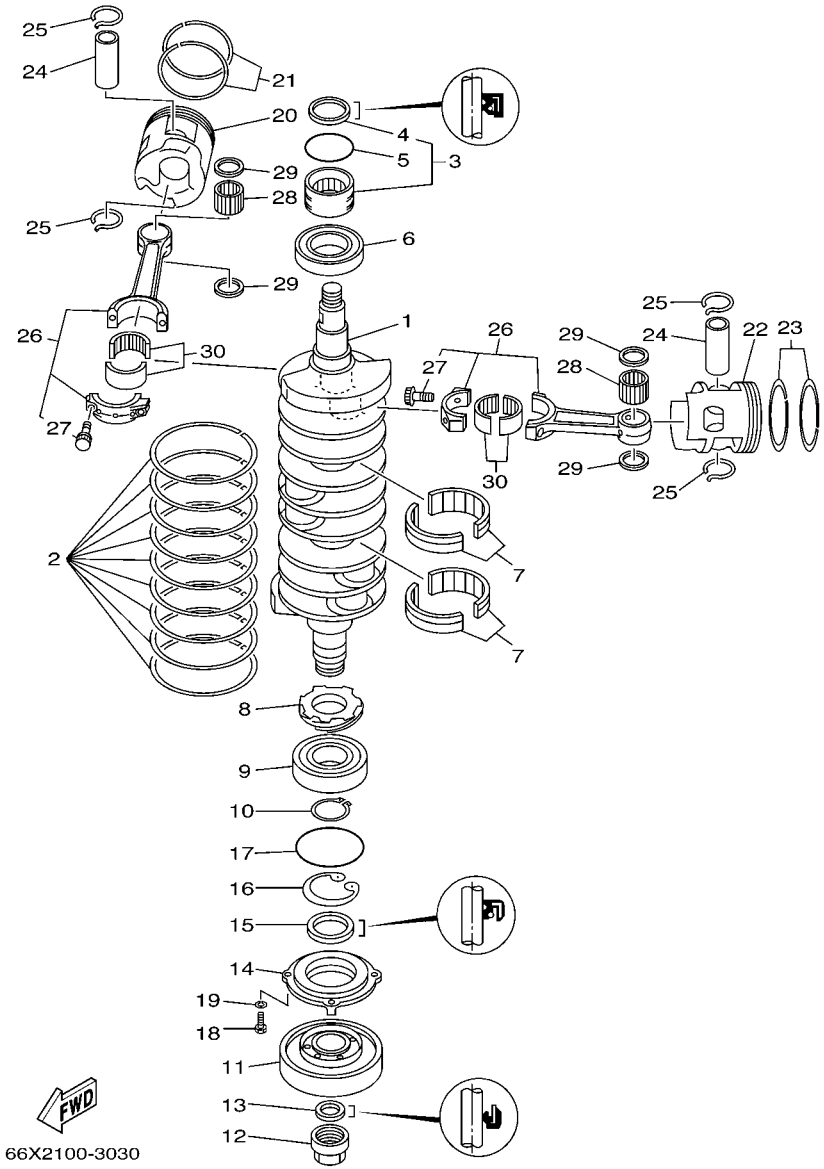

FIG. 3 CRANKSHAFT & PISTON — CIGUENAL & PISTON

REF. NO.	PART NO. CODIGO Nº	DESCRIPTION DESCRIPCION	65J3	65L3	65K3	65M3		REMARKS OBSERVACIONES
22	69L–11646–00	PISTON 2 (0.50MM O/S) PISTON 2 (0.50MM O/S)	3	3	3	3		AP AP
23	64D–11603–01	PISTON RING SET (STD) JUEGO DE ANILLOS (NORMA)	3	3	3	3		
	64D–11604–01	PISTON RING SET (0.25MM O/S) JUEGO DE ANILLOS (0.25MM O/S)	3	3	3	3		AP AP
	64D–11605–01	PISTON RING SET (0.50MM O/S) JUEGO DE ANILLOS (0.50MM O/S)	3	3	3	3		AP AP
24	61A–11633–02	PIN, PISTON PASADOR, PISTON	6	6	6	6		
25	61A–11634–00	CLIP, PISTON PIN PRESILLA, BULON DE PISTON	12	12	12	12		
26	61A–11650–00	CONNECTING ROD ASSY BIELA COMPLETA	6	6	6	6		
27	90109–09001	.BOLT .PERNO	2	2	2	2		
28	93310–326V4	BEARING COJINETE DE RODILLOS	6	6	6	6		
29	90201–26M03	WASHER, PLATE ARANDELA PLANA	12	12	12	12		
30	93310–840V8	BEARING COJINETE DE RODILLOS	6	6	6	6		

FIG. 4 CYLINDER & CRANKCASE 2 CILINDRO & CARTER 2

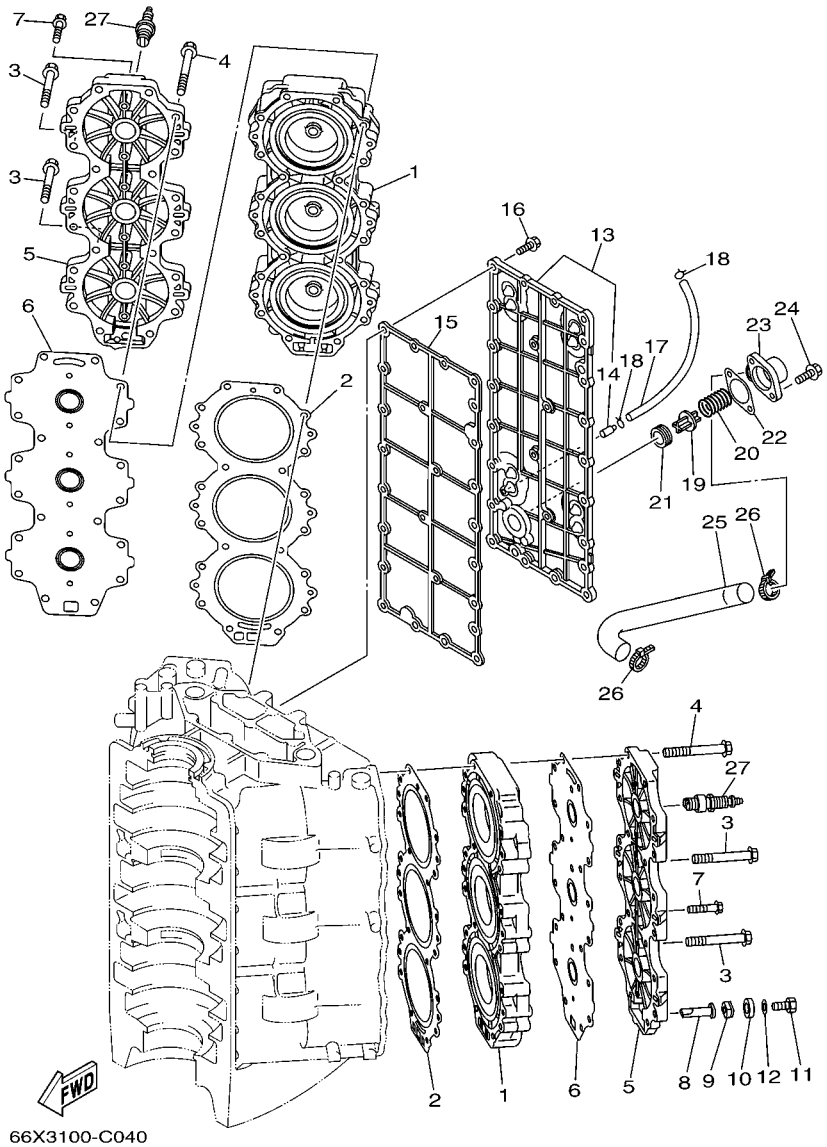

REF. NO.	PART NO. CODIGO Nº	DESCRIPTION DESCRIPCION	65J3	65L3	65K3	65M3		REMARKS OBSERVACIONES
1	62J–11111–01–1S	HEAD, CYLINDER 1 CULATA CILINDRO 1	2	2	2	2		
2	69L–11181–00	GASKET, CYLINDER HEAD 1 JUNTA, DE CULATA 1	2	2	2	2		
3	90119–08MA5	BOLT, WITH WASHER TORNILLO CON ARANDELA	4	4	4	4		
4	90119–08M99	BOLT, WITH WASHER TORNILLO CON ARANDELA	36	36	36	36		
5	61A–11191–00–1S	COVER, CYLINDER HEAD 1 TAPA CULATA DE CILINDRO 1	2	2	2	2		
6	61A–11193–A1	GASKET, HEAD COVER 1 EMPAQUE	2	2	2	2		
7	90119–06MA5	BOLT, WITH WASHER TORNILLO CON ARANDELA	12	12	12	12		
8	6J8–11325–00	ANODE ANODO	2	2	2	2		
9	6H3–11328–00	GROMMET, ANODE TAPON	2	2	2	2		
10	6H3–11327–00–1S	COVER, ANODE CUBIERTA	2	2	2	2		
11	97013–06016	BOLT PERNO	2	2	2	2		
12	92903–06600	WASHER, PLATE RONDANA SENCILLA	2	2	2	2		
13	61A–41113–00–1S	OUTER COVER, EXHAUST CUBOERTA EXTERIOR DE ESCAPE	1	1	1	1		
14	650–24378–00	.PIPE, JOINT 4 .TUBO DE UNION 4	1	1	1	1		
15	61A–41112–A1	GASKET, EXHAUST INNER COVER EMPAQUE	1	1	1	1		
16	90119–06MA3	BOLT, WITH WASHER TORNILLO CON ARANDELA	25	25	25	25		
17	90445–09M25	HOSE (L600) TUBO (L600)	1	1	1	1		
18	90467–08004	CLIP PRESILLA	2	2	2	2		
19	6G5–12416–00	VALVE, PRESSURE CONTROL VALVULA DE CONTROL DE PRESION	1	1	1	1		
20	90501–16M11	SPRING, COMPRESSION RESORTE DE COMPRESION	1	1	1	1		
21	90480–20M05	GROMMET TAPON	1	1	1	1		
22	6G5–11382–A1	GASKET 2 EMPAQUE 2	1	1	1	1		
23	6G5–11372–00–1S	COVER, BYPASS 2 CUBIERTA	1	1	1	1		
24	90119–06MA2	BOLT, WITH WASHER TORNILLO CON ARANDELA	2	2	2	2		
25	61A–12576–00	HOSE 1 MANGUERA 1	1	1	1	1		
26	90465–13M18	CLAMP BRIDA	2	2	2	2		
27	94702–00309	PLUG, SPARK (NGK BR9HS-10) BUJIA (NGK BR9HS-10)	6	6	6	6		

FIG. 5 FUEL INJECTION PUMP BOMBA DE COMBUSTIBLE

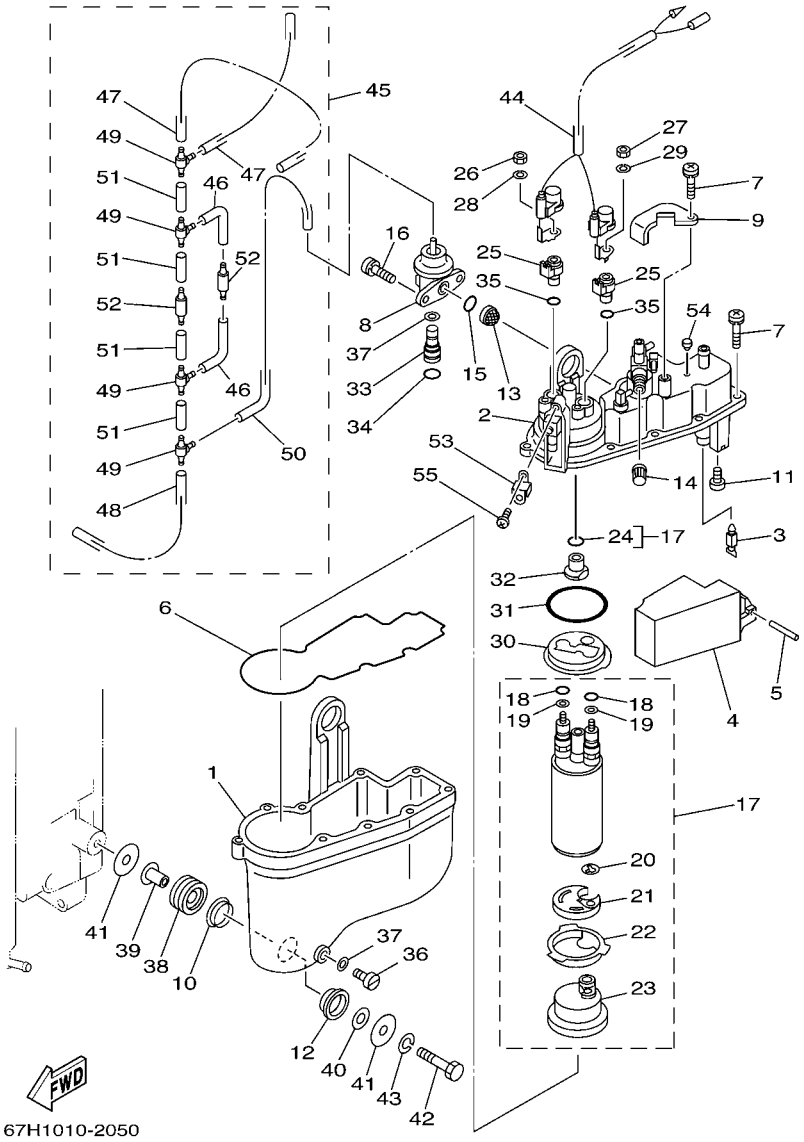

REF. NO.	PART NO. CODIGO Nº	DESCRIPTION DESCRIPCION	65J3	65L3	65K3	65M3		REMARKS OBSERVACIONES
1	66K–14980–00	BODY, FLOAT CHAMBER CUERPO CAMARA DE BOIA	1	1	1	1		
2	67H–14182–00	COVER, FLOAT CHAMBER TAPA DE CAMARA DE BOIA	1	1	1	1		
3	65L–14546–00	VALVE, NEEDLE VALVULA DE AGUJA	1	1	1	1		
4	66K–14985–00	FLOAT BOIA	1	1	1	1		
5	66K–14548–01	PIN, FLOAT ARM PASADOR DE BRAZO DE BOIA	1	1	1	1		
6	66K–14984–00	GASKET, FLOAT CHAMBER EMPAQUE CAMARA DE BOIA	1	1	1	1		
7	65L–14125–00	SCREW TORNILLO	10	10	10	10		
8	66K–13906–00	REGULATOR, PRESSURE REGULADOR	1	1	1	1		
9	66K–14255–00	PLATE PLACA	1	1	1	1		
10	66K–14239–00	SEAL SELLO	3	3	3	3		
11	66K–14325–01	SCREW, PAN HEAD TORNILLO CABEZA REDONDA	2	2	2	2		
12	66K–14163–00	SPACER ESPACIADOR	3	3	3	3		
13	65L–13905–00	FILTER COMP FILTRO COMPLETO	1	1	1	1		
14	65L–14966–00	CAP TAPA	1	1	1	1		
15	65L–24486–00	O-RING ANILLO O	1	1	1	1		
16	66K–14245–00	SCREW, GUIDE TORNILLO DE GUIA	2	2	2	2		
17	67H–13907–00	FUEL PUMP COMP. BOMBA DE COMBUSTIBLE COMPLETA	1	1	1	1		
18	65L–14227–00	.O-RING .ANILLO O	2	2	2	2		
19	65L–14194–00	.RING .ANILLO	2	2	2	2		
20	65L–14159–00	.CLIP .PRESILLA	1	1	1	1		
21	66K–13781–00	.DAMPER, PUMP .AMORTIGUADOR DE BOMBA	1	1	1	1		
22	66K–13844–00	.PLATE 2 .PLACA 2	1	1	1	1		
23	66K–13915–00	.FILTER .FILTRO	1	1	1	1		
24	65L–1416A–00	.O-RING .ANILLO O	1	1	1	1		
25	66K–14271–00	INSULATOR AISLANTE	2	2	2	2		
26	65L–8182A–00	NUT TUERCA	1	1	1	1		
27	65L–8182K–00	NUT TUERCA	1	1	1	1		

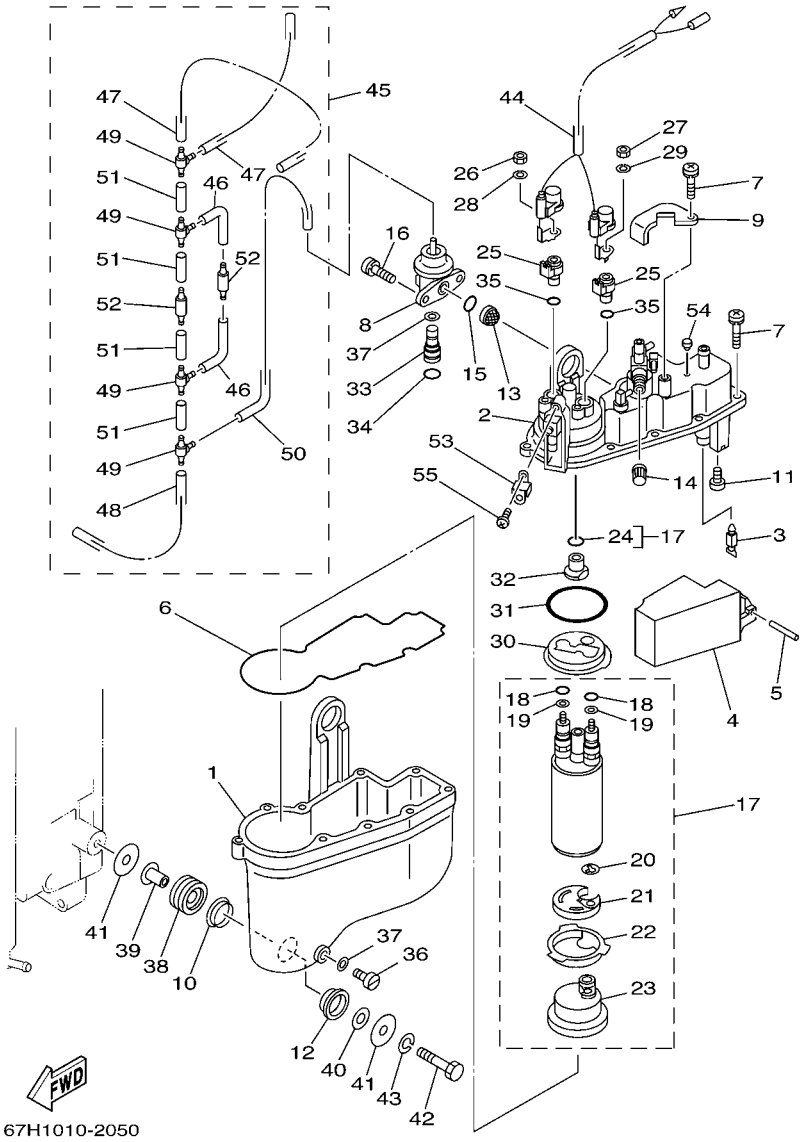

FIG. 5 FUEL INJECTION PUMP BOMBA DE COMBUSTIBLE

REF. NO.	PART NO. CODIGO Nº	DESCRIPTION DESCRIPCION	65J3	65L3	65K3	65M3		REMARKS OBSERVACIONES
28	65L–8182E–00	WASHER RONDANA	1	1	1	1		
29	65L–8182F–00	WASHER RONDANA	1	1	1	1		
30	66K–13843–00	PLATE 1 PLACA 1	1	1	1	1		
31	65L–14147–00	O-RING ANILLO O	1	1	1	1		
32	65L–14274–00	CONNECTOR CONECTOR	1	1	1	1		
33	66K–24376–00	PIPE, JOINT 1 TUBO DE UNION 1	1	1	1	1		
34	66K–24489–00	O-RING ANILLO O	1	1	1	1		
35	65L–14397–00	O-RING ANILLO O	3	3	3	3		
36	65L–14992–00	ROD VARILLA	1	1	1	1		
37	65L–14997–00	SEAL SELLO	2	2	2	2		
38	65L–24375–00	GROMMET ARANDELA DE REFUERZO	3	3	3	3		
39	65L–24397–00	COLLAR COLLAR	3	3	3	3		
40	65L–24576–00	WASHER ARANDELA	3	3	3	3		
41	66K–24579–00	WASHER 2 ARANDELA 2	6	6	6	6		
42	65L–24592–00	BOLT TORNILLO	3	3	3	3		
43	65L–24169–00	WASHER, LOCK ARANDELA DE CIERRE	3	3	3	3		
44	67H–82507–00	WIRE, LEAD CABLE CONDUCTOR	1	1	1	1		
45	67H–13490–00	RELIEF VALVE ASSY VALVELA DE DESCOMPRESION	1	1	1	1		
46	66K–13542–00	.HOSE, VACUUM SENSING 1 .MANGUERA, DE VACIO 1	2	2	2	2		
47	67H–13544–00	.HOSE, VACUUM SENSING 2 .MANGUERA, DE VACIO 2	2	2	2	2		
48	67H–13532–00	.HOSE, VACUUM SENSING 3 .MANGUERA, DE VACIO 3	1	1	1	1		
49	65L–24461–00	.PIPE, JOINT .TUBO DE UNION	4	4	4	4		
50	67H–13533–00	.HOSE, VACUUM SENSING 4 .MANGUERA, DE VACIO 4	1	1	1	1		
51	67H–13534–00	.HOSE, VACUUM SENSING 5 .MANGUERA, DE VACIO 5	4	4	4	4		
52	67H–13183–00	.VALVE, CHECK .VALVULA DE RETENTION	2	2	2	2		
53	66K–13898–00	HOLDER SOSTEN	1	1	1	1		
54	67H–14225–00	CAP TAPA	1	1	1	1		

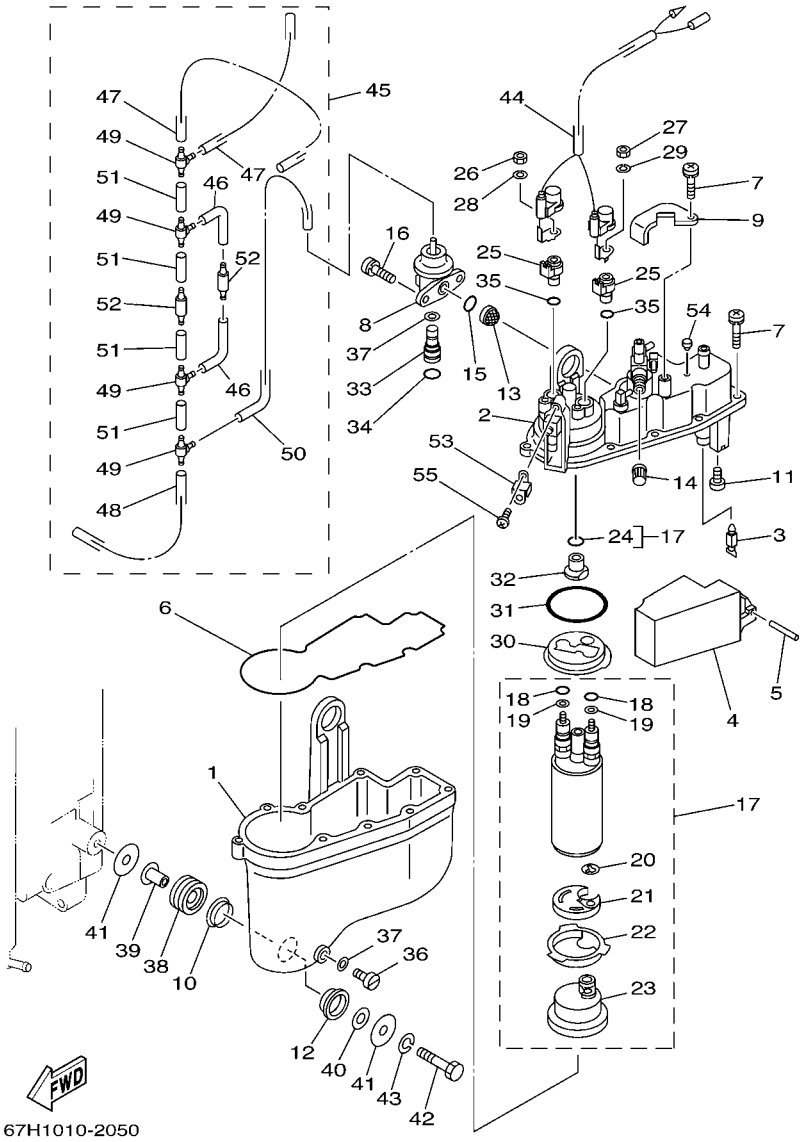

FIG. 5 FUEL INJECTION PUMP — BOMBA DE COMBUSTIBLE

REF. NO.	PART NO. CODIGO Nº	DESCRIPTION DESCRIPCION	65J3	65L3	65K3	65M3		REMARKS OBSERVACIONES
55	65L–14565–00	SCREW TORNILLO	1	1	1	1		

FIG. 6 FUEL INJECTION NOZZLE INJECTOR DE COMBUSTIBLE

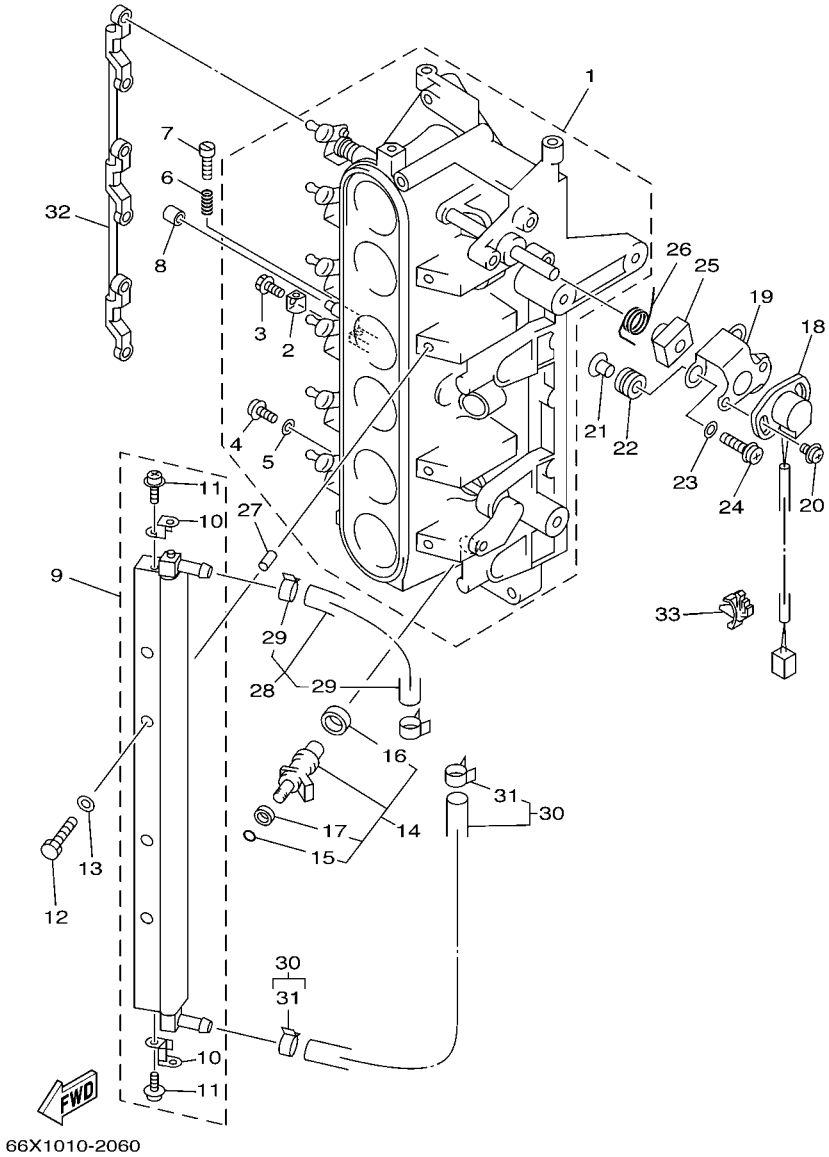

REF. NO.	PART NO. CODIGO Nº	DESCRIPTION DESCRIPCION	65J3	65L3	65K3	65M3		REMARKS OBSERVACIONES
1	67H–13751–00	BODY, THROTTLE 1 CAJA 1	1	1	1	1		
2	65L–14527–00	.PLATE .PLACA	1	1	1	1		
3	65L–14565–00	.SCREW .TORNILLO	1	1	1	1		
4	6K5–14592–00	.SCREW .TORNILLO	6	6	6	6		
5	90201–05552	.WASHER, PLATE .ARANDELA PLANA	6	6	6	6		
6	65L–14334–00	SPRING, AIR ADJUSTING RESORTE DE AJUSTADOR DE AIRE	1	1	1	1		
7	65L–14523–00	SCREW, STOP TORNILLO DE TOPE	1	1	1	1		
8	65L–14578–00	COLLAR COLLAR	1	1	1	1		
9	67H–13938–00	PIPE TUBO DE ADMISION	1	1	1	1		
10	67H–13898–00	.HOLDER .SOSTEN	2	2	2	2		
11	65L–14565–00	.SCREW .TORNILLO	2	2	2	2		
12	65L–13573–00	BOLT 1 PERNO 1	4	4	4	4		
13	65L–13995–00	WASHER EMPAQUE	4	4	4	4		
14	65L–13761–00	INJECTOR ASSY INYECTOR	6	6	6	6		
15	65L–13769–00	.O-RING .ANILLO O	1	1	1	1		
16	65L–13764–00	.GASKET .EMPAQUE	1	1	1	1		
17	65L–13766–00	.RUBBER, INJECTOR .ANILLO PROTECTOR	1	1	1	1		
18	61A–85885–00	THROTTLE SENSOR ASSY TERMICA SENSORIO	1	1	1	1		
19	6K7–85886–00	BRACKET SOPORTE	1	1	1	1		
20	97985–05212	SCREW, WITH WASHER TORNILLO, CON ARANDELA	2	2	2	2		
21	90387–05M00	COLLAR COLLAR	3	3	3	3		
22	90480–10M23	GROMMET TAPON	3	3	3	3		
23	65L–14596–00	WASHER ARANDELA	3	3	3	3		
24	97985–05330	SCREW, WITH WASHER TORNILLO, CON ARANDELA	3	3	3	3		
25	65L–14573–00	LEVER PALANCA	1	1	1	1		
26	65L–14579–00	SPRING RESORTE	1	1	1	1		
27	65L–13996–00	INSERT CARTUCHO	2	2	2	2		

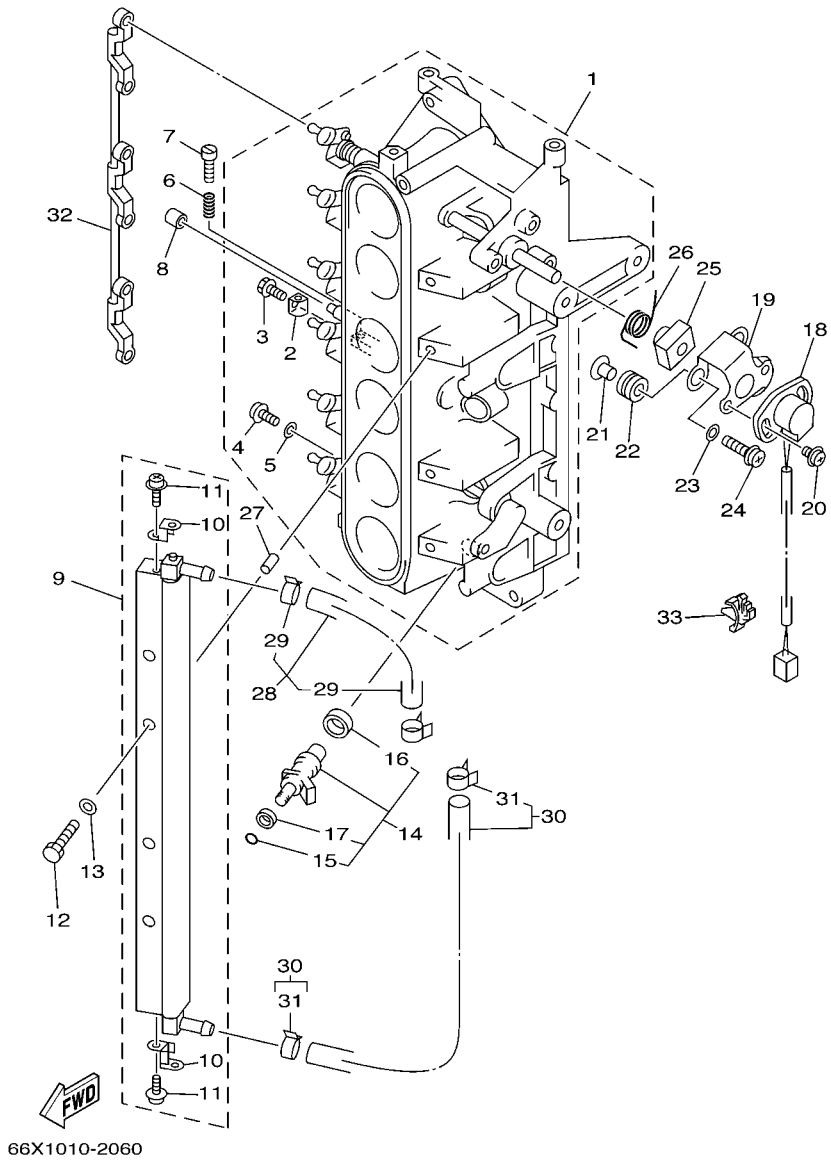

FIG. 6 FUEL INJECTION NOZZLE — INJECTOR DE COMBUSTIBLE

REF. NO.	PART NO. CODIGO Nº	DESCRIPTION DESCRIPCION	65J3	65L3	65K3	65M3		REMARKS OBSERVACIONES
28	66K–13971–00	PIPE, FUEL 1 ANILLO DE ESPACIADOR	1	1	1	1		
29	65L–24387–00	.CLIP .MORDAZA	2	2	2	2		
30	67H–13972–00	PIPE, FUEL 2 TUBO, COMBUSTIBLE 2	1	1	1	1		
31	65L–24387–00	.CLIP .MORDAZA	2	2	2	2		
32	65L–41217–00	ROD, ACCEL. LEVER VARILLA PALANCA ACELERADOR	1	1	1	1		
33	90464–04M12	CLAMP BRIDA	1	1	1	1		

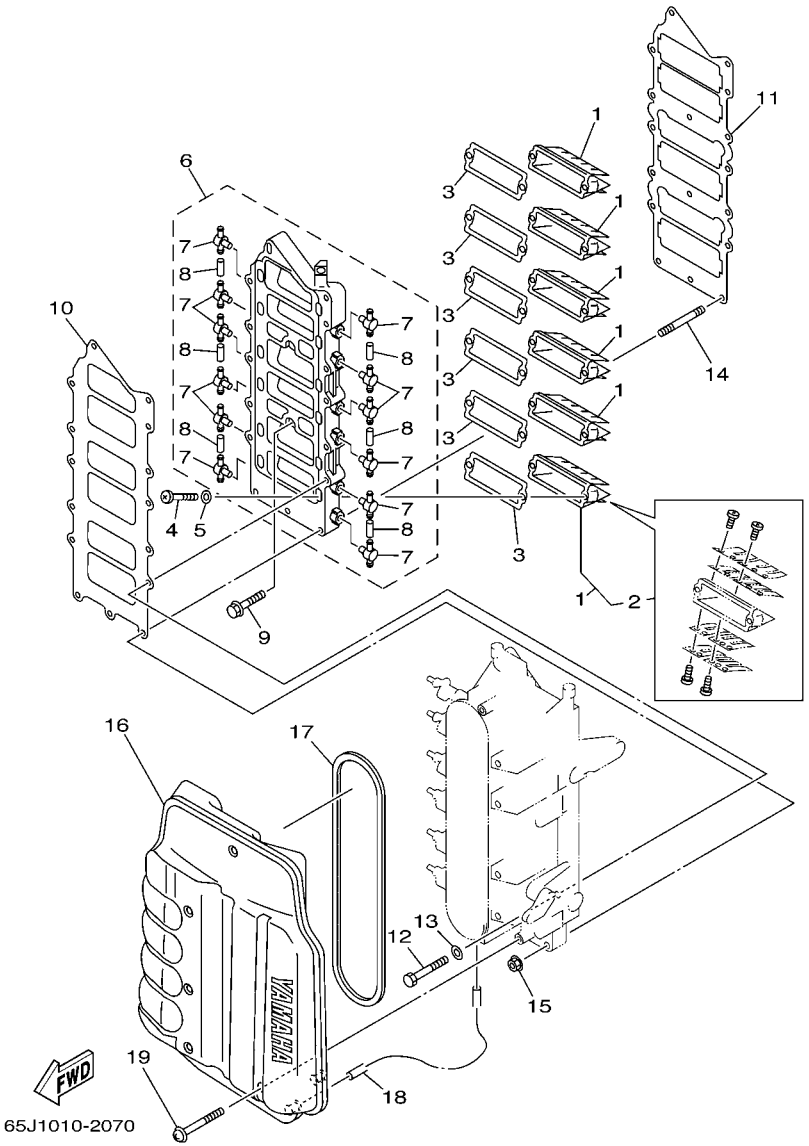

FIG. 7 INTAKE — ADMISION

REF. NO.	PART NO. CODIGO Nº	DESCRIPTION DESCRIPCION	65J3	65L3	65K3	65M3		REMARKS OBSERVACIONES
1	65J–13610–01	REED VALVE ASSY VALVULA DE LAMINAS COMPLETA	6		6			
	65L–13610–01	REED VALVE ASSY VALVULA DE LAMINAS COMPLETA		6		6		
2	65J–W0004–01	.REED SET .JUEGO DE VALVULAS DE LENGUETA	1	1	1	1		
3	61A–13621–A0	GASKET, VALVE SEAT JUNTA, DE VALV.DE EMPAQUE	6	6	6	6		
4	97880–05016	SCREW, PAN HEAD TORNILLO DE CABEZA CON PLANA	12	12	12	12		
5	92990–05600	WASHER, PLATE ARANDELA PLANA	12	12	12	12		
6	65L–13624–01–1S	PLATE,REED VALVE PLACA DE VALVULA DE LAMINAS	1	1	1	1		
7	6F6–11372–01	.NIPPLE, HOSE .NIPLE DE MANGUERA	12	12	12	12		
8	90445–07M03	.HOSE (L34) .TUBO (L34)	6	6	6	6		
9	90105–06028	BOLT, FLANGE TORNILLO	2	2	2	2		
10	65L–13646–00	GASKET, MANIFOLD 2 EMPAQ. DE MULTIPLE 2	1	1	1	1		
11	65L–13645–00	GASKET, MANIFOLD 1 EMPAQUE	1	1	1	1		
12	97013–06060	BOLT PERNO	12	12	12	12		
13	92903–06600	WASHER, PLATE RONDANA SENCILLA	12	12	12	12		
14	95670–06655	BOLT, STUD TORNILLO PRISIONERO	2	2	2	2		
15	90179–06M24	NUT TUERCA	2	2	2	2		
16	65L–14440–00	SILENCER ASSY, INTAKE SILENCIADOR COMPL DE ADMISION	1	1	1	1		
17	65L–14483–00	GASKET EMPAQUE	1	1	1	1		
18	90445–07M44	HOSE (L250) TUBO (L250)	1	1	1	1		
19	90159–06M16	SCREW, WITH WASHER TORNILLO CON VALONA	6	6	6	6		

FIG. 8 OIL PUMP — BOMBA DE ACEITE

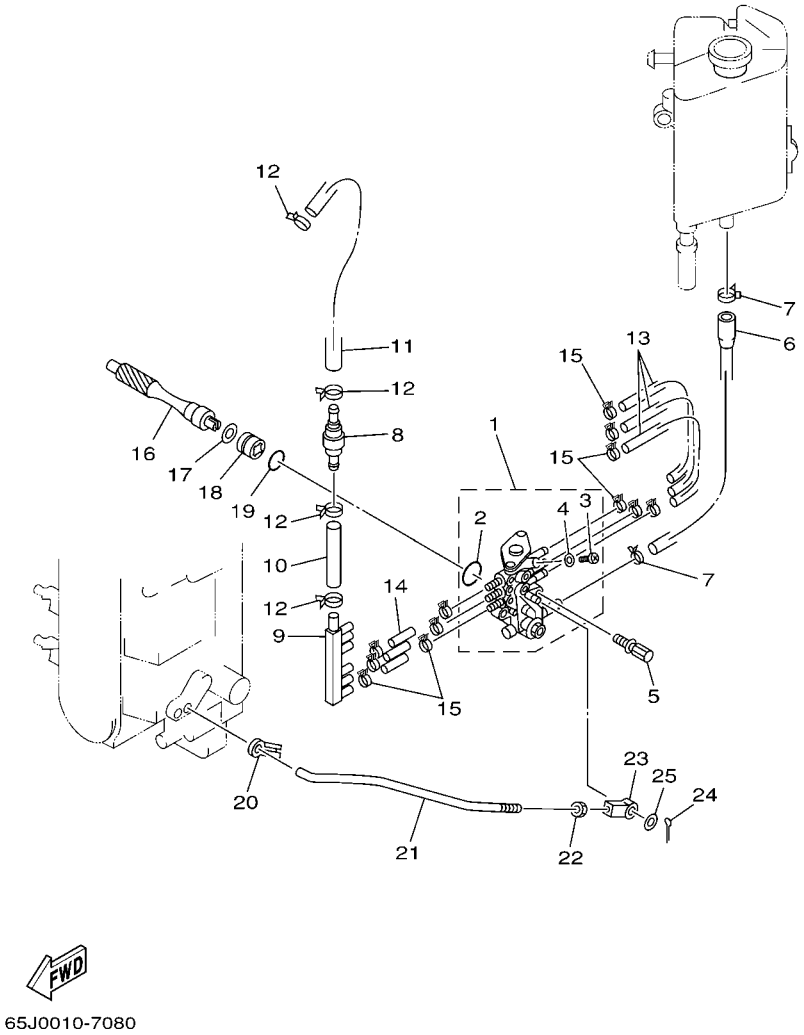

REF. NO.	PART NO. CODIGO Nº	DESCRIPTION DESCRIPCION	65J3	65L3	65K3	65M3		REMARKS OBSERVACIONES
1	65L–13200–00	OIL INJECTION PUMP ASSY BOMBA DE ACEITE COMPLETA	1	1	1	1		
2	93210–19M82	.O-RING .ANILLO O	1	1	1	1		
3	6R3–13471–00	.PLUG, DRAIN .TAPON DE LLAVE DE VACIADO	1	1	1	1		
4	6L2–13475–00	.GASKET .EMPAQUE	1	1	1	1		
5	90109–06M40	BOLT PERNO	2	2	2	2		
6	61A–13416–00	PIPE, OIL 1 TUBO DE ACEITE 1	1	1	1	1		
7	90465–11M10	CLAMP BRIDA	2	2	2	2		
8	65L–13183–00	VALVE, CHECK VALVULA DE RETENTION	1	1	1	1		
9	65L–24378–00	PIPE, JOINT 4 TUBO DE UNION 4	1	1	1	1		
10	90445–09220	HOSE (L30) TUBO (L30)	1	1	1	1		
11	90446–09M69	HOSE TUBO RESEIRADERO	1	1	1	1		
12	90465–11M10	CLAMP BRIDA	4	4	4	4		
13	90445–07M02	HOSE (L167) TUBO (L167)	3	3	3	3		
14	90445–07M03	HOSE (L34) TUBO (L34)	3	3	3	3		
15	90468–07M02	CLIP PRESILLA	12	12	12	12		
16	61A–11537–00	GEAR, DRIVEN ENGRANAJE TRACCION	1	1	1	1		
17	90201–09M01	WASHER, PLATE ARANDELA PLANA	1	1	1	1		
18	61A–13117–00	COLLAR, DISTANCE COLLAR, DISTANCIA	1	1	1	1		
19	93210–18MA9	O-RING ANILLO O	1	1	1	1		
20	6R5–41237–00	JOINT, LINK CONECTOR	1	1	1	1		
21	65L–41241–10	ROD, LINK VARILLA	1	1	1	1		
22	95380–05600	NUT TUERCA	1	1	1	1		
23	6H1–41237–00	JOINT, LINK CONECTOR	1	1	1	1		
24	91490–12012	PIN, COTTER CHAVETA	1	1	1	1		
25	90202–05088	WASHER, PLATE ARANDELA DE PLANA	1	1	1	1		

FIG. 9 OIL TANK — COMPONER Y PODER VARILLA

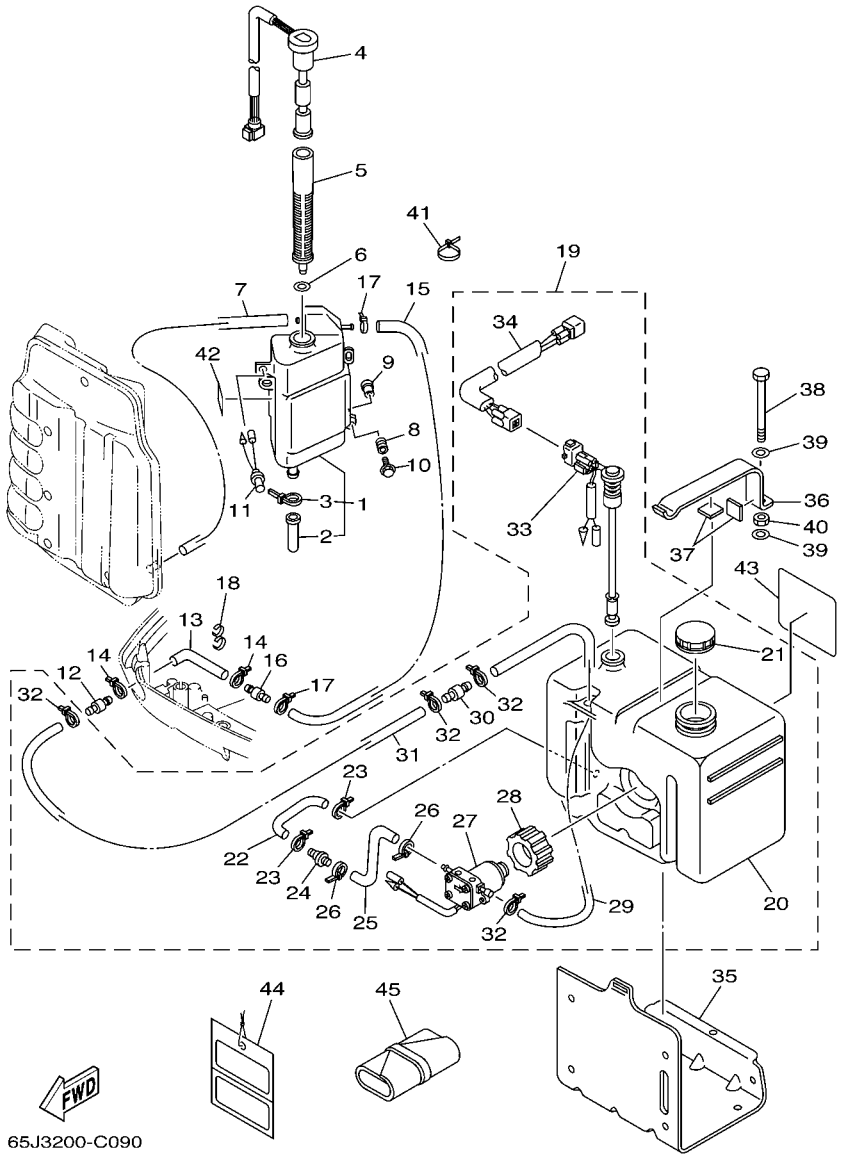

REF. NO.	PART NO. CODIGO Nº	DESCRIPTION DESCRIPCION	65J3	65L3	65K3	65M3		REMARKS OBSERVACIONES
1	61A–21750–00	OIL TANK ASSY DEPOSITO DE ACEITE COMPLETO	1	1	1	1		
2	6E5–13448–00	.CAP .TAPA	1	1	1	1		
3	90465–13M11	.CLAMP .BRIDA	1	1	1	1		
4	61A–85730–01	OIL LEVEL GAUGE ASSY ACEITE	1	1	1	1		
5	61A–13411–00	STRAINER, OIL FILTRO DE ACEITE	1	1	1	1		
6	6E5–13414–00	GASKET, STRAINER COVER EMPAQUE DE TAPA FILTRO	1	1	1	1		
7	90445–05M07	HOSE (L700) TUBO (L700)	1	1	1	1		
8	6A0–82317–00	DAMPER, IGNITION COIL AMORTIGUADOR BOBINA ENCENDIDO	3	3	3	3		
9	624–42542–00	PIPE TUBO	3	3	3	3		
10	90119–06M65	BOLT, WITH WASHER TORNILLO CON ARANDELA	3	3	3	3		
11	6R3–8259E–00	SWITCH ASSY INTERRUPTOR	1	1	1	1		
12	6E5–24379–00	PIPE, JOINT 4 TUBO DE UNION 4	1	1	1	1		
13	90445–12M04	HOSE (L1900) MANGUERA (L1900)	1	1	1	1		
14	90465–11M10	CLAMP BRIDA	2	2	2	2		
15	6E5–24323–00	PIPE 12 TUBO 12	1	1	1	1		
16	6E5–24379–00	PIPE, JOINT 4 TUBO DE UNION 4	1	1	1	1		
17	90465–11M10	CLAMP BRIDA	2	2	2	2		
18	90464–13M34	CLAMP BRIDA	1	1	1	1		
19	61A–21708–20	SUB OIL TANK ASSY DEPOSITO DE ACEITE COMPLETO	1	1	1	1		
20	6E5–21733–20	.SUB TANK, OIL (10.5L) .SUB DEPOSITO DE ACEITE (10.5L)	1	1	1	1		
21	6E5–21770–03	.OIL TANK CAP ASSY .TAPA DE DEPOSITO DE ACEITE	1	1	1	1		
22	6E5–24322–00	.PIPE 11 .TUBO 11	1	1	1	1		
23	90465–11M10	.CLAMP .BRIDA	2	2	2	2		
24	646–24251–02	.STRAINER 1 .COLADOR 1	1	1	1	1		
25	6E5–24319–01	.PIPE, OIL .TUBO DE ACEITE	1	1	1	1		
26	90465–11M10	.CLAMP .BRIDA	2	2	2	2		
27	6E5–81900–01	.OIL FEED PUMP ASSY .ACEITE	1	1	1	1		

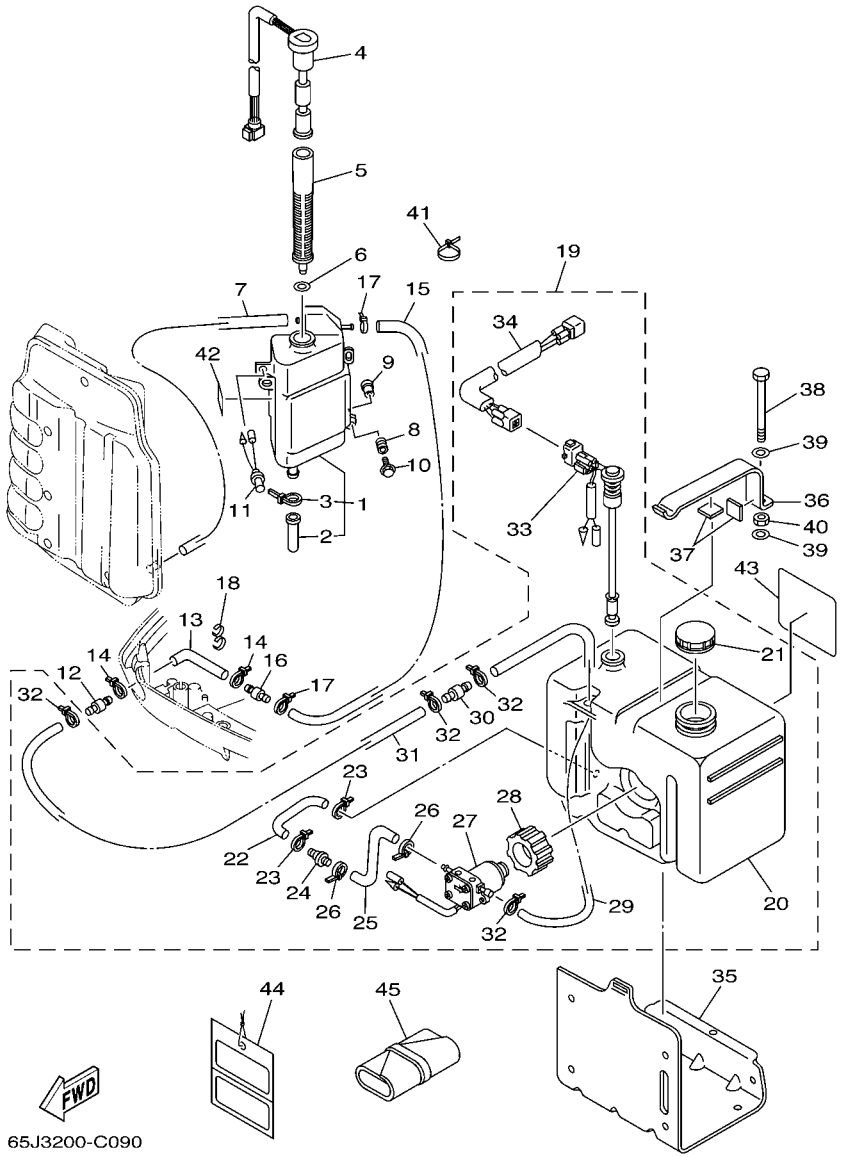

FIG. 9 OIL TANK — COMPONER Y PODER VARILLA

REF. NO.	PART NO. CODIGO Nº	DESCRIPTION DESCRIPCION	65J3	65L3	65K3	65M3		REMARKS OBSERVACIONES
28	6E5–81922–00	.GROMMET .TAPON PROTECTOR	1	1	1	1		
29	6E5–24321–01	.PIPE 10 .TUBO 10	1	1	1	1		
30	6E5–24379–00	.PIPE, JOINT 4 .TUBO DE UNION 4	1	1	1	1		
31	90445–11M26	.HOSE (L6500) .TUBO (L6500)	1	1	1	1		
32	90465–11M10	.CLAMP .BRIDA	4	4	4	4		
33	6E5–85720–05	.OIL LEVEL GAUGE ASSY .MEDIDOR DE NIVEL DE ACEITE	1	1	1	1		
34	6R3–85721–80	.WIRE, LEAD (8M) .CABLE CONDUCTOR (8M)	1	1	1	1		
35	6E5–21734–01–33	HOLDER, OIL SUB TANK SOSTEN SUBDEP.DE ACEITE	1	1	1	1		
36	6E5–21798–01–33	BRACKET, DAMPER SOPORTE DE AMORTIGUADOR	1	1	1	1		
37	6E5–21746–00	DAMPER AMORTIGUADOR	2	2	2	2		
38	97080–06100	BOLT PERNO	1	1	1	1		
39	92990–06600	WASHER, PLATE ARANDELA PLANA	2	2	2	2		
40	95380–06600	NUT, HEXAGON TUERCA	1	1	1	1		
41	90465–13M11	CLAMP BRIDA	2	2	2	2		
42	6E5–85711–40	MARK, CAUTION MARKER	1	1	1	1		
43	6E5–13437–62	MARK, CAUTION MARKER	1	1	1	1		
44	61H–2819R–31	TAG, WARNING ETIQUETA DE ADVERTENCIA	1	1	1	1		FOR CAR FOR CAR
45	656–W2810–02	TOOL KIT JUEGO DE HERRAMIENTAS	1	1	1	1		

FIG. 10 FUEL 1 — COMBUSTIBLE 1

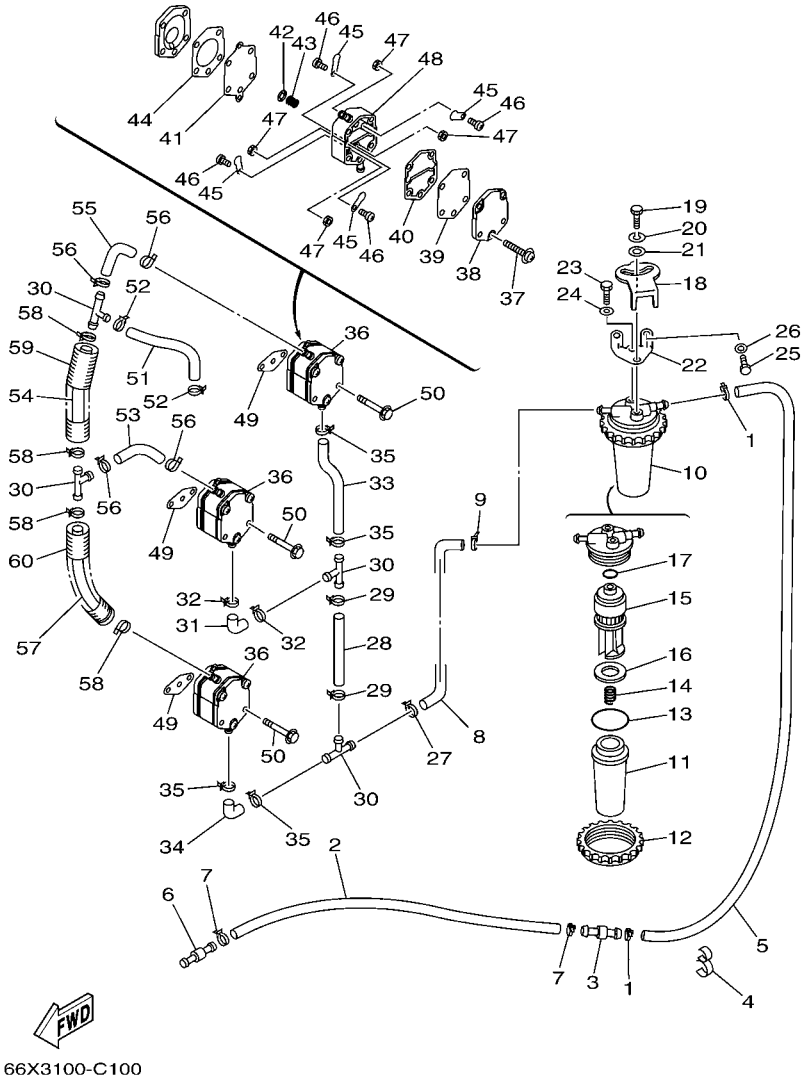

REF. NO.	PART NO. CODIGO Nº	DESCRIPTION DESCRIPCION	65J3	65L3	65K3	65M3		REMARKS OBSERVACIONES
1	90465–11M10	CLAMP BRIDA	2	2	2	2		
2	90445–13M17	HOSE (L2700) MANGUERA (L2700)	1	1	1	1		
3	6R3–24377–00	PIPE, JOINT 3 TUBO DE UNION 3	1	1	1	1		
4	90464–13M34	CLAMP BRIDA	2	2	2	2		
5	61A–24313–00	PIPE 3 TUBO 3	1	1	1	1		
6	6R3–24377–00	PIPE, JOINT 3 TUBO DE UNION 3	1	1	1	1		
7	90465–11M10	CLAMP BRIDA	2	2	2	2		
8	68F–24311–00	PIPE, FUEL 1 TUBO DE COMBUSTIBLE 1	1	1	1	1		
9	90465–11M10	CLAMP BRIDA	1	1	1	1		
10	65L–24560–00	FILTER ASSY FILTRO COMPLETO	1	1	1	1		
11	61A–24521–00	.CUP, FILTER .COPA DE FILTRO	1	1	1	1		
12	65L–24531–01	.NUT .TUERCA	1	1	1	1		
13	61A–24564–00	.O-RING .ANILLO O	1	1	1	1		
14	65L–24577–00	.SPRING .RESORTE	1	1	1	1		
15	65L–24563–00	.ELEMENT, FILTER .ELEMENTO DEL FILTRO	1	1	1	1		
16	61A–24469–00	.FLOAT, WATER LEVEL .BOIA	1	1	1	1		
17	65L–24564–00	.O-RING .ANILLO O	1	1	1	1		
18	60H–24558–00	HOLDER, FILTER SOPORTE DE FILTRO	1	1	1	1		
19	97095–06016	BOLT PERNO	1	1	1	1		
20	92995–06100	WASHER, SPRING ARANDELA	1	1	1	1		
21	90201–06068	WASHER, PLATE ARANDELA PLANA	1	1	1	1		
22	61A–24566–00	BRACKET, FILTER SOPORTE DEL FILTRO	1	1	1	1		
23	97095–06014	BOLT PERNO	1	1	1	1		
24	92995–06600	WASHER ARANDELA	1	1	1	1		
25	97095–06016	BOLT PERNO	2	2	2	2		
26	92995–06600	WASHER ARANDELA	2	2	2	2		
27	90465–11M10	CLAMP BRIDA	1	1	1	1		

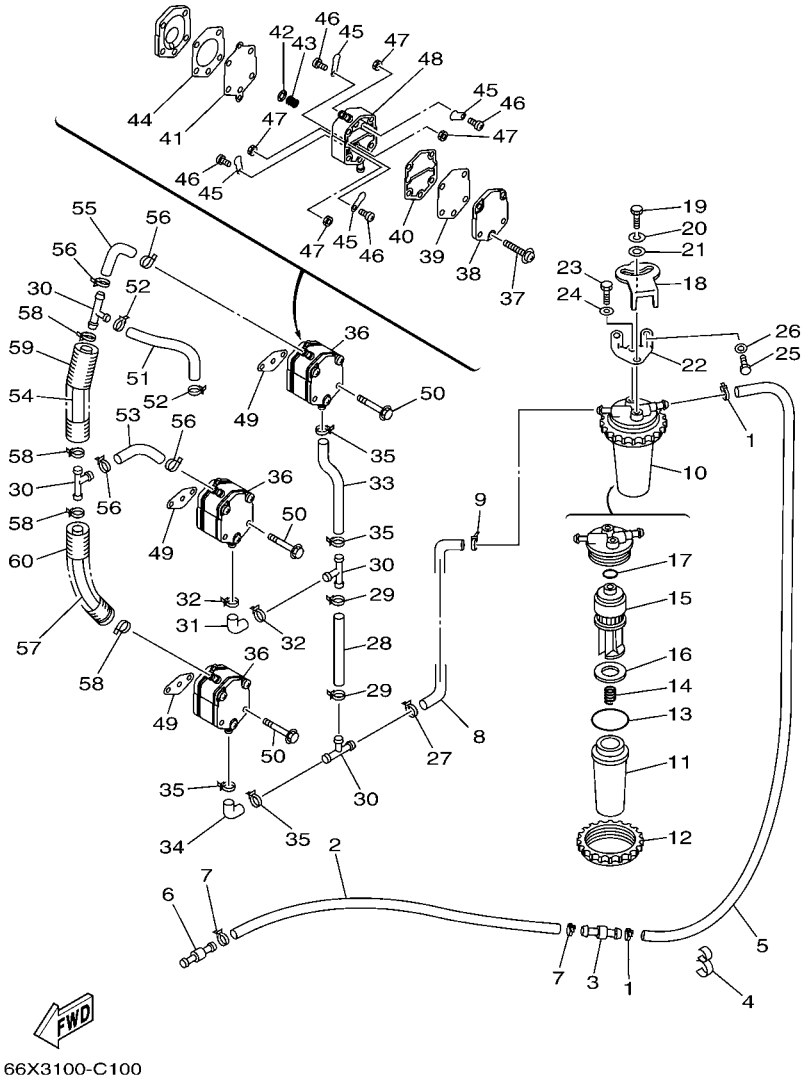

FIG. 10 FUEL 1 — COMBUSTIBLE 1

REF. NO.	PART NO. CODIGO Nº	DESCRIPTION DESCRIPCION	65J3	65L3	65K3	65M3		REMARKS OBSERVACIONES
28	6G5–24317–01	PIPE 7 TUBO 7	1	1	1	1		
29	90465–11M10	CLAMP BRIDA	2	2	2	2		
30	6E5–24378–00	PIPE, JOINT 3 TUBO DE UNION 3	4	4	4	4		
31	6E5–24315–00	PIPE 5 TUBO DE DESAGUE	1	1	1	1		
32	90465–11M10	CLAMP BRIDA	2	2	2	2		
33	6G5–24315–00	PIPE 5 TUBO DE DESAGUE	1	1	1	1		
34	6E5–24315–00	PIPE 5 TUBO DE DESAGUE	1	1	1	1		
35	90465–11M10	CLAMP BRIDA	4	4	4	4		
36	6E5–24410–03	FUEL PUMP ASSY BOMBA DE COMBUSTIBLE COMPLETA	3	3	3	3		
37	6E5–24444–00	.SCREW .TORNILLO	3	3	3	3		
38	6E5–24413–00	.BODY 2 .CUERPO 2	1	1	1	1		
39	6E5–24471–00	.DIAPHRAGM .DIAFRAGMA	1	1	1	1		
40	6E5–24435–00	.GASKET, BODY 2 .EMPAQUE	1	1	1	1		
41	6E5–24411–00	.DIAPHRAGM .DIAFRAGMA	1	1	1	1		
42	648–24424–00	.SEAT, SPRING .PLACA DE RESORTE	1	1	1	1		
43	6E5–24423–00	.SPRING, DIAPHRAGM .RESORTE DE DIAFRAGMA	1	1	1	1		
44	6E5–24434–02	.GASKET, BODY .EMPAQUE	1	1	1	1		
45	6A0–24421–01	.VALVE, CHECK .VALVULA DE RETENCION	4	4	4	4		
46	6A0–14325–00	.SCREW, PAN HEAD .TORNILLO CABEZA REDONDA	4	4	4	4		
47	95380–03600	.NUT .TUERCA	4	4	4	4		
48	6E5–24412–10	.BODY 1 .CUERPO 1	1	1	1	1		
49	650–24431–A0	GASKET, FUEL PUMP 1 EMPAQUE BOMBA COMBUST 1	3	3	3	3		
50	97595–06550	BOLT, WITH WASHER PERNO CON ARANDELA RONDELLE	6	6	6	6		
51	65L–24311–00	PIPE, FUEL 1 TUBO DE COMBUSTIBLE 1	1	1	1	1		
52	90465–11M10	CLAMP BRIDA	2	2	2	2		
53	6G5–24316–10	PIPE 6 TUBO 6	1	1	1	1		
54	90445–13M14	HOSE (L70) TUBO (L70)	1	1	1	1		

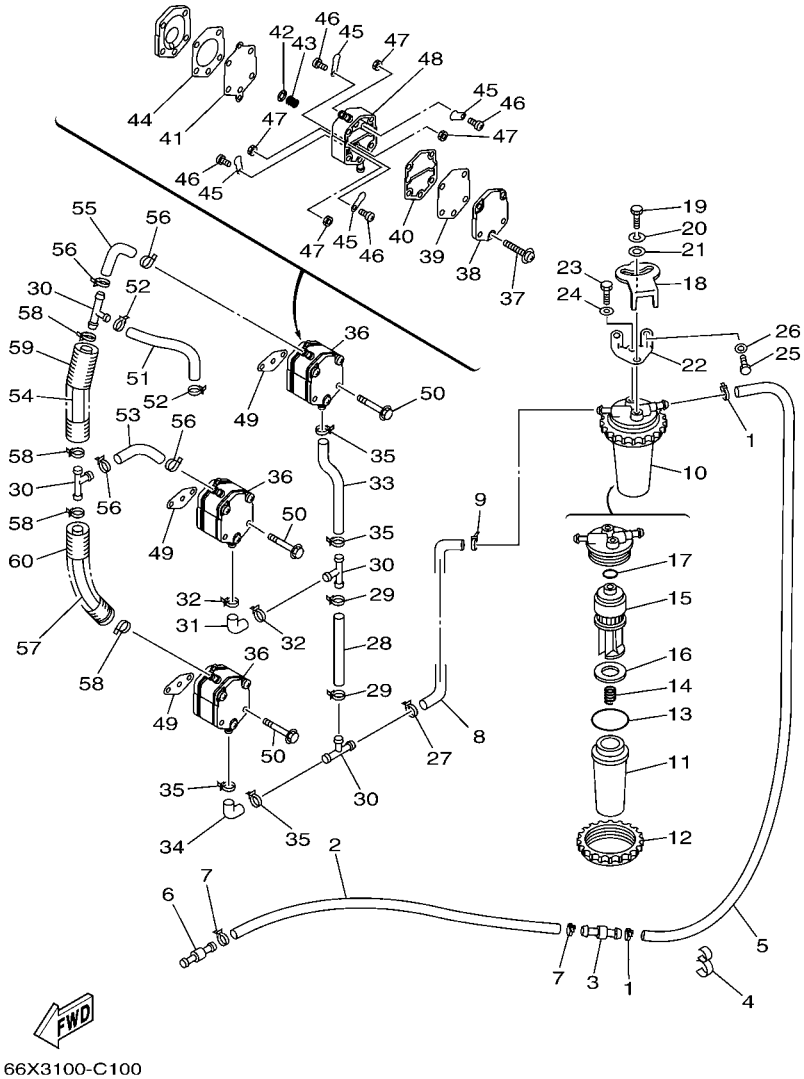

FIG. 10 FUEL 1 — COMBUSTIBLE 1

REF. NO.	PART NO. CODIGO Nº	DESCRIPTION DESCRIPCION	65J3	65L3	65K3	65M3		REMARKS OBSERVACIONES
55	61A–24311–00	PIPE, FUEL 1 TUBO DE COMBUSTIBLE 1	1	1	1	1		
56	90465–11M10	CLAMP BRIDA	4	4	4	4		
57	6E5–24313–00	PIPE 3 TUBO 3	1	1	1	1		
58	90465–11M10	CLAMP BRIDA	4	4	4	4		
59	6E9–83557–70	TUBE ENCHUFE DE ACEITE	1	1	1	1		
60	65L–83557–00	TUBE ENCHUFE DE ACEITE	1	1	1	1		

FIG. 11 FUEL 2 — COMBUSTIBLE 2

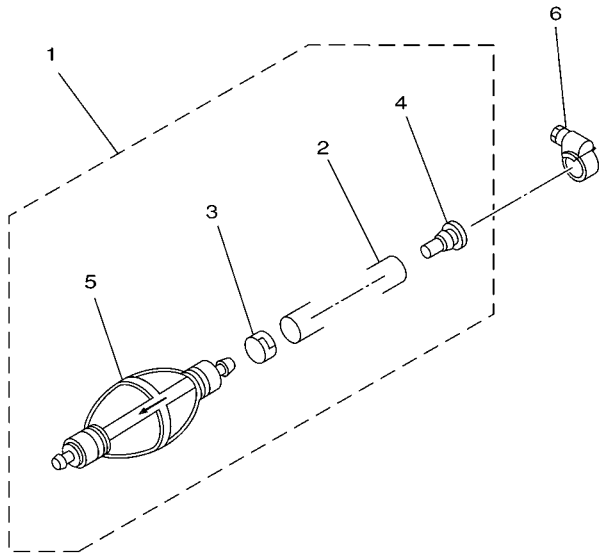

61A0200-0110

REF. NO.	PART NO. CODIGO Nº	DESCRIPTION DESCRIPCION	65J3	65L3	65K3	65M3		REMARKS OBSERVACIONES
1	6Y2–24307–50	FUEL PIPE COMP. 2 MANGUERA COMPL,COMBUSTIBLE 2		1	1	1		AP 65L3-BRA ONLY AP 65L3-BRA ONLY
2	90445–13M01	.HOSE (L2050) .MANGUERA (L2050)		1	1	1		
3	6E5–24351–51	.BAND 1 .ABRAZADERA 1		1	1	1		
4	90480–06M19	.GROMMET .TAPON		1	1	1		
5	6Y2–24360–60	.PRIMER PUMP ASSY .SOPORTE BOMBA		1	1	1		
6	90450–10M07	HOSE CLAMP ASSY BRIDA, MANGUERA		1	1	1		AP 65L3-BRA ONLY AP 65L3-BRA ONLY

FIG. 12 GENERATOR GENERADOR

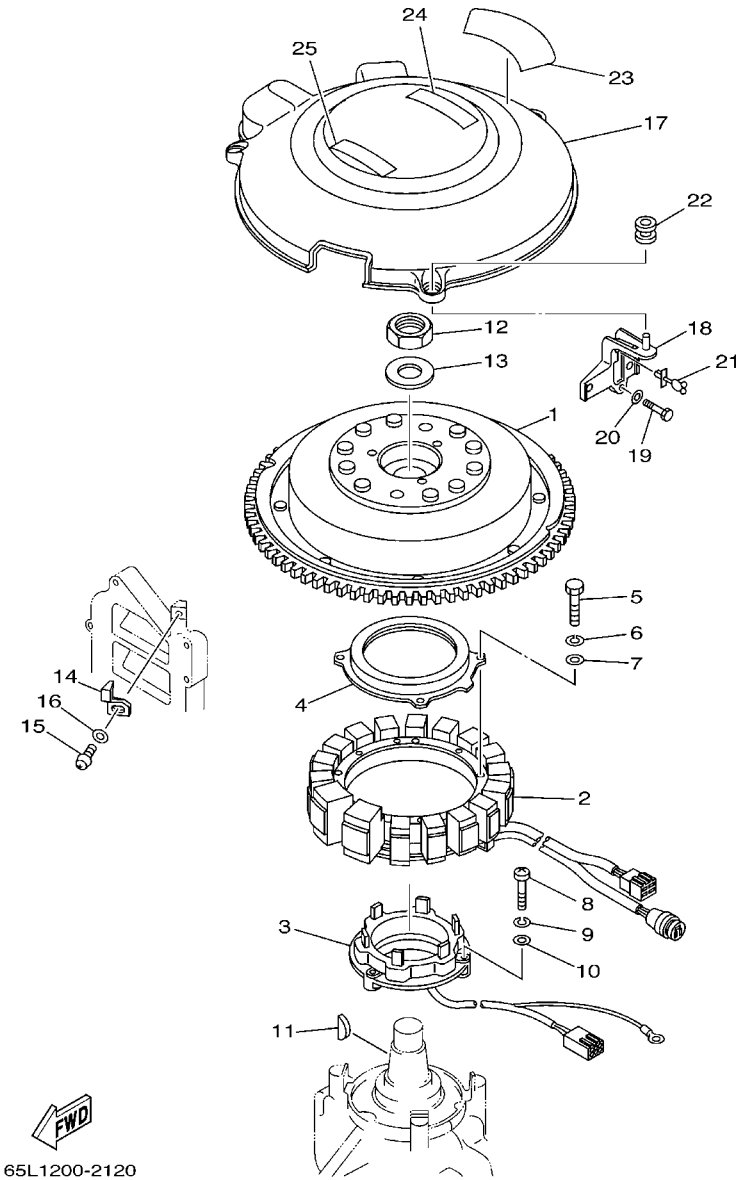

REF. NO.	PART NO. CODIGO Nº	DESCRIPTION DESCRIPCION	65J3	65L3	65K3	65M3		REMARKS OBSERVACIONES
1	61A–85550–01	ROTOR ASSY ROTOR COMPLETO	1	1	1	1		
2	65L–85510–10	STATOR ASSY ESTATOR COMPLET	1	1	1	1		
3	61A–85580–01	COIL, PULSER BOBINA DE PULSACION	1	1	1	1		
4	61A–83721–00	COVER CUBIERTA	1	1	1	1		
5	97013–06035	BOLT PERNO	4	4	4	4		
6	92903–06100	WASHER, SPRING RONDANA SENCILLA	4	4	4	4		
7	92903–06600	WASHER, PLATE RONDANA SENCILLA	4	4	4	4		
8	97885–05030	SCREW, PAN HEAD TORNILLO A MUESCA	3	3	3	3		
9	92995–05100	WASHER ARANDELA	3	3	3	3		
10	92995–05600	WASHER ARANDELA	3	3	3	3		
11	90280–05015	KEY, WOODRUFF CUNA WOODRUFF	1	1	1	1		
12	90170–24M22	NUT TUERCA	1	1	1	1		
13	90201–25M02	WASHER, PLATE ARANDELA PLANA	1	1	1	1		
14	6E5–81332–00	PLATE, TIMING PLACA REGULADOR DE TIEMPO	1	1	1	1		
15	97885–06010	SCREW, PAN HEAD TORNILLO A MUESCA	1	1	1	1		
16	92995–06600	WASHER ARANDELA	1	1	1	1		
17	61A–81337–01	COVER, FLYWHEEL CUBIERTA DE VOLANTE	1	1	1	1		
18	65L–81338–00–1S	CLAMP, LEAD GRAMPA DE CONDUCTOR	1	1	1	1		
19	97013–06025	BOLT PERNO	1	1	1	1		
20	92903–06600	WASHER, PLATE RONDANA SENCILLA	1	1	1	1		
21	90464–18M46	CLAMP BRIDA	1	1	1	1		
22	663–82317–01	DAMPER, IGNITION COIL AMORTIGUADOR BOBINA ENCENDIDO	3	3	3	3		
23	65L–14488–00	LABEL, CAUTION ETIQUETA PRECAUCION	1	1	1	1		
24	6A1–83625–41	MARK 5 MARCA 5	1	1	1	1		
25	6K1–83623–41	MARK 3 MARCA 3			1	1		

FIG. 13 ELECTRICAL 1 — EQUIPO ELECTRICO 1

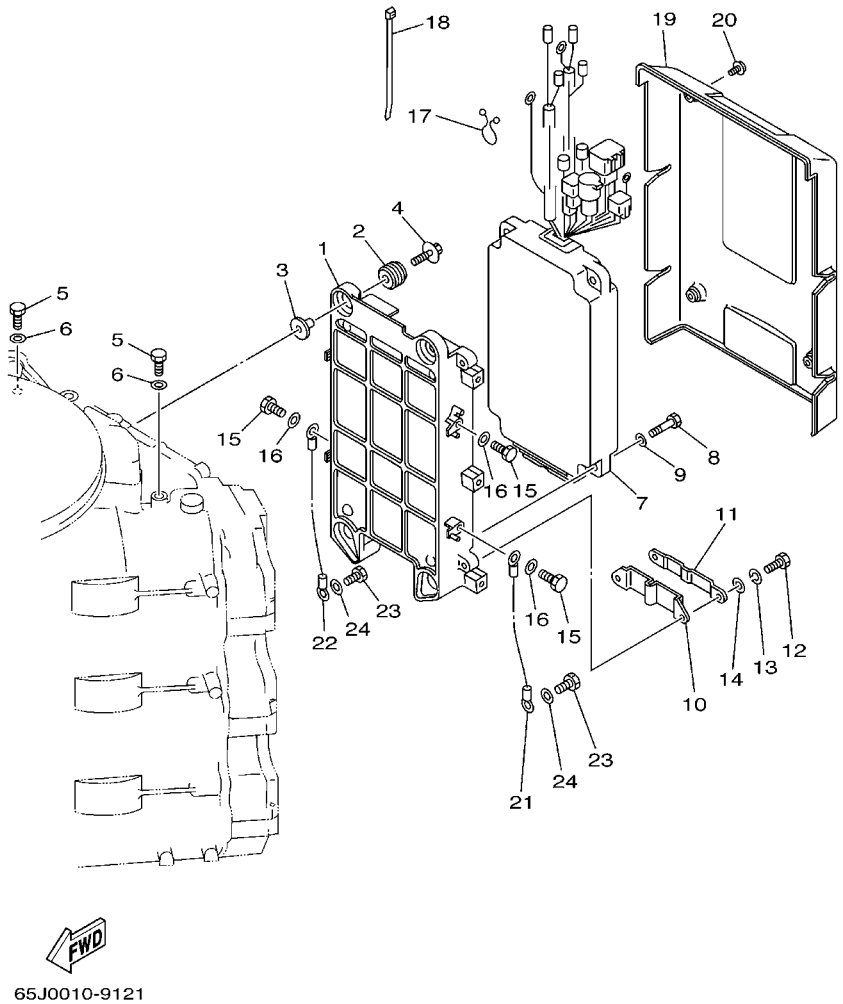

REF. NO.	PART NO. CODIGO Nº	DESCRIPTION DESCRIPCION	65J3	65L3	65K3	65M3		REMARKS OBSERVACIONES
1	61A–85542–01–94	BRACKET SOPORTE	1	1	1	1		
2	90480–09M12	GROMMET TAPON	4	4	4	4		
3	90387–06M03	COLLAR COLLAR	4	4	4	4		
4	90119–06M28	BOLT, WITH WASHER TORNILLO CON ARANDELA	4	4	4	4		
5	97013–06016	BOLT PERNO	2	2	2	2		
6	92903–06600	WASHER, PLATE RONDANA SENCILLA	2	2	2	2		
7	65J–85540–02	C.D.I. UNIT ASSY UNIDAD C.D.I. COMPLETA	1		1			
	65L–85540–02	C.D.I. UNIT ASSY UNIDAD C.D.I. COMPLETA		1		1		
8	97013–06025	BOLT PERNO	4	4	4	4		
9	92903–06600	WASHER, PLATE RONDANA SENCILLA	4	4	4	4		
10	61A–85548–00	HOLDER SOSTEN	1	1	1	1		
11	61A–85525–00	COVER CUBIERTA	1	1	1	1		
12	97095–06016	BOLT PERNO	2	2	2	2		
13	92995–06100	WASHER, SPRING ARANDELA	2	2	2	2		
14	92995–06600	WASHER ARANDELA	2	2	2	2		
15	97013–06014	BOLT PERNO	4	4	4	4		
16	92903–06600	WASHER, PLATE RONDANA SENCILLA	4	4	4	4		
17	90464–15M11	CLAMP BRIDA	1	1	1	1		
18	90465–11M52	CLAMP BRIDA	1	1	1	1		
19	61A–85537–00	COVER CUBIERTA	1	1	1	1		
20	90159–06M03	SCREW, WITH WASHER TORNILLO CON VALONA	4	4	4	4		
21	61A–82519–00	WIRE, EARTH LEAD CABLE CONDUCTOR A TIERRA	1	1	1	1		
22	6G0–82519–00	WIRE, EARTH LEAD CABLE CONDUCTOR A TIERRA	1	1	1	1		
23	97095–06012	BOLT PERNO	2	2	2	2		
24	92995–06600	WASHER ARANDELA	2	2	2	2		

FIG. 14 ELECTRICAL 2 — EQUIPO ELECTRICO 2

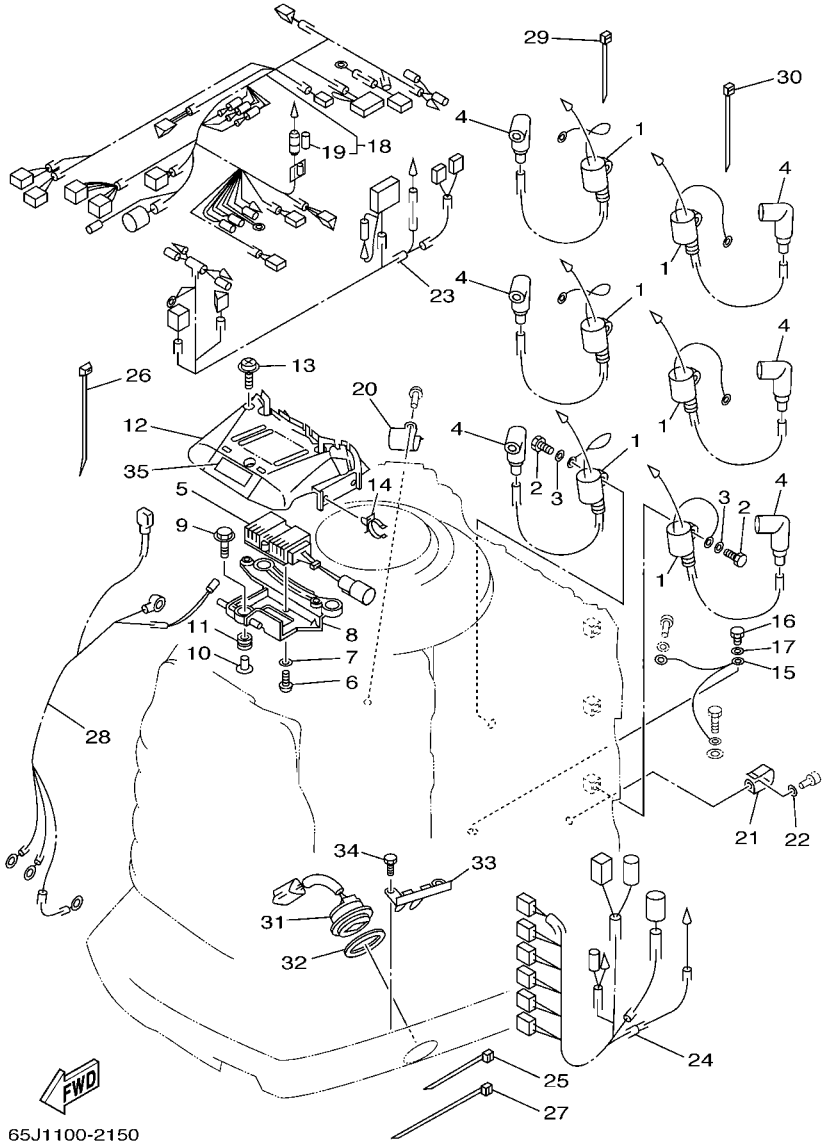

REF. NO.	PART NO. CODIGO Nº	DESCRIPTION DESCRIPCION	65J3	65L3	65K3	65M3		REMARKS OBSERVACIONES
1	61A–85570–00	IGNITION COIL ASSY BOBINA DE IGNICION COMPLETO	6	6	6	6		
2	97013–06020	BOLT PERNO	6	6	6	6		
3	92903–06600	WASHER, PLATE RONDANA SENCILLA	6	6	6	6		
4	6E3–82370–21	PLUG CAP ASSY TAPON DE BUJIA COMPLT	6	6	6	6		
5	65L–85370–00	RESISTOR ASSY RESISTOR COMPLETO	1	1	1	1		
6	97885–05010	SCREW, PAN HEAD TORNILLO A MUESCA	2	2	2	2		
7	92995–05600	WASHER ARANDELA	2	2	2	2		
8	65L–81915–00–94	PLATE, REGULATOR FITTING PLACA ACCESORIA DE REGULADOR	1	1	1	1		
9	90119–06M65	BOLT, WITH WASHER TORNILLO CON ARANDELA	3	3	3	3		
10	90387–06M60	COLLAR COLLAR	3	3	3	3		
11	90480–10M23	GROMMET TAPON	3	3	3	3		
12	65L–81916–00	COVER, TERMINAL CUBIERTA DE TERMINAL	1	1	1	1		
13	90159–06M03	SCREW, WITH WASHER TORNILLO CON VALONA	2	2	2	2		
14	90464–19M45	CLAMP BRIDA	2	2	2	2		
15	61A–82531–00	WIRE, LEAD CABLE CONDUCTOR	1	1	1	1		
16	97095–06012	BOLT PERNO	1	1	1	1		
17	92995–06600	WASHER ARANDELA	1	1	1	1		
18	65L–82590–10	WIRE HARNESS ASSY CONJUNTO DE CABLES	1	1	1	1		
19	705–82151–00	.FUSE (30A) .FUSIBLE (30A)	1	1	1	1		
20	90465–08M89	CLAMP BRIDA	1	1	1	1		
21	90465–05M87	CLAMP BRIDA	1	1	1	1		
22	92903–06600	WASHER, PLATE RONDANA SENCILLA	1	1	1	1		
23	65L–8259M–00	WIRE HARNESS ASSY 2 ARNES DE CABLES	1	1	1	1		
24	65L–8259N–01	WIRE HARNESS ASSY 3 ARNES DE CABLES	1	1	1	1		
25	90465–11M10	CLAMP BRIDA	1	1	1	1		
26	90465–11M52	CLAMP BRIDA	1	1	1	1		
27	90465–13M18	CLAMP BRIDA	1	1	1	1		

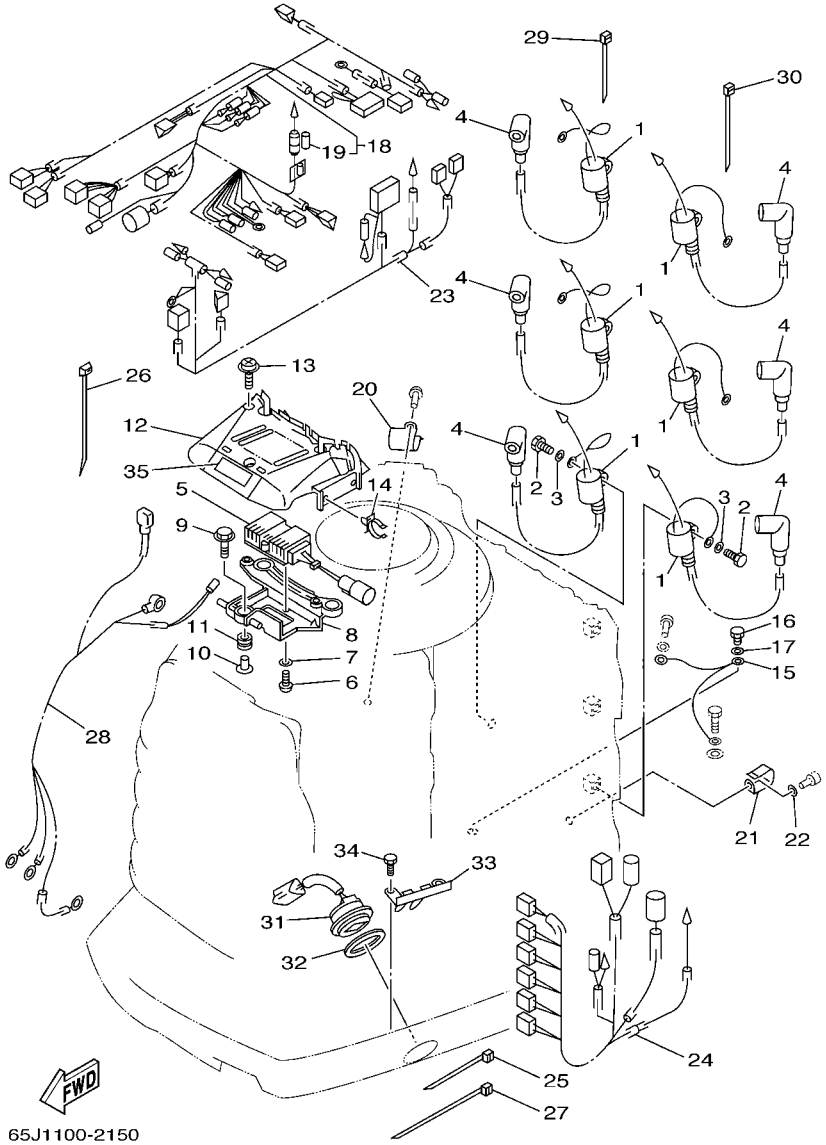

FIG. 14 ELECTRICAL 2 — EQUIPO ELECTRICO 2

REF. NO.	PART NO. CODIGO Nº	DESCRIPTION DESCRIPCION	65J3	65L3	65K3	65M3		REMARKS OBSERVACIONES
28	61A–82105–00	WIRE HARNESS ARNES DE CABLES	1	1	1	1		
29	90465–11M10	CLAMP BRIDA	1	1	1	1		
30	90465–13M18	CLAMP BRIDA	1	1	1	1		
31	61A–82563–00	TRIM & TILT SWITCH ASSY INTERRUPTOR DE INCLINACION	1	1	1	1		
32	6E5–82587–00	GASKET EMPAQUETADURA	1	1	1	1		
33	61A–83614–00	BRACKET SOPORTE	1	1	1	1		
34	97095–06012	BOLT PERNO	2	2	2	2		
35	65L–83625–40	MARK 5 MARCA 5	1	1	1	1		

FIG. 15 ELECTRICAL 3 EQUIPO ELECTRICO 3

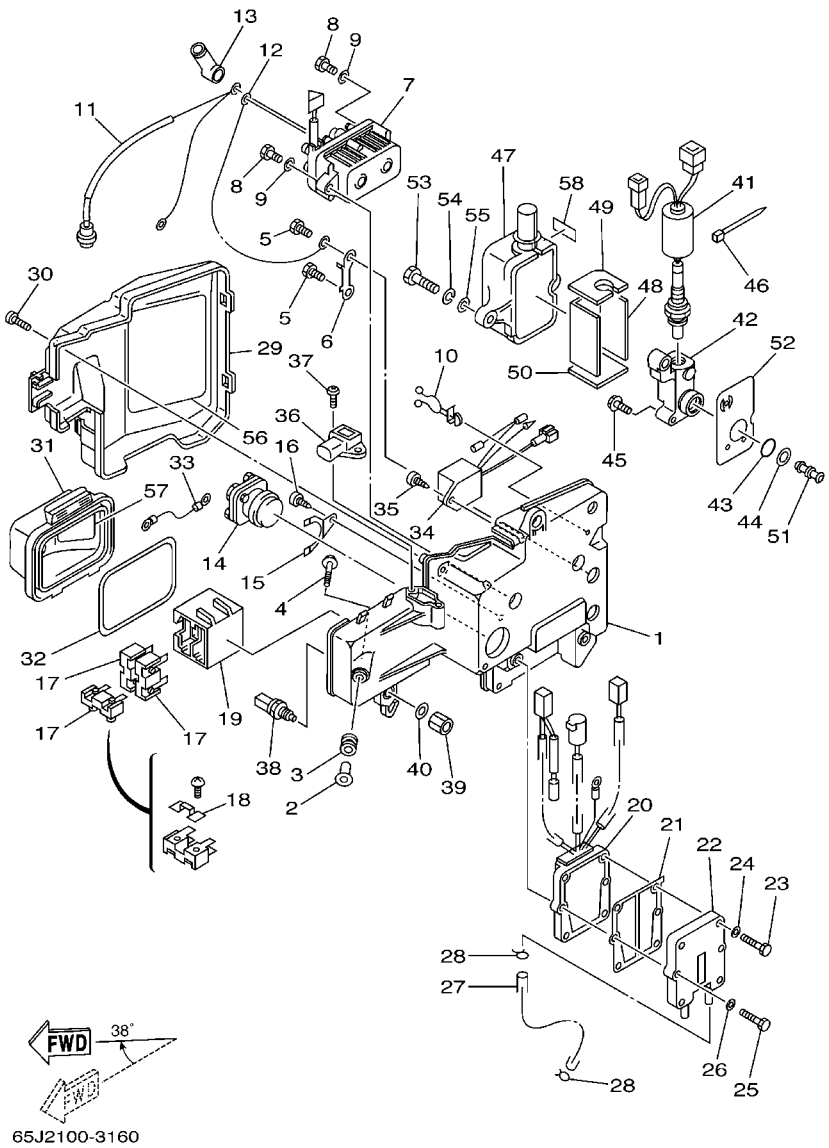

REF. NO.	PART NO. CODIGO Nº	DESCRIPTION DESCRIPCION	65J3	65L3	65K3	65M3		REMARKS OBSERVACIONES
1	65L–81948–00	BRACKET SOPORTE	1	1	1	1		
2	624–42542–00	PIPE TUBO	5	5	5	5		
3	6A0–82317–00	DAMPER, IGNITION COIL AMORTIGUADOR BOBINA ENCENDIDO	5	5	5	5		
4	90119–06M65	BOLT, WITH WASHER TORNILLO CON ARANDELA	5	5	5	5		
5	97013–06014	BOLT PERNO	2	2	2	2		
6	61A–87149–00	CONNECTOR CONECTOR	1	1	1	1		
7	61A–81950–00	RELAY ASSY RELE COMPLETO	1	1	1	1		
8	97013–06030	BOLT PERNO	2	2	2	2		
9	92903–06600	WASHER, PLATE RONDANA SENCILLA	2	2	2	2		
10	90464–18M46	CLAMP BRIDA	1	1	1	1		
11	61A–81949–10	WIRE, LEAD CABLE CONDUCTOR	1	1	1	1		
12	61A–81949–00	WIRE, LEAD CABLE CONDUCTOR	1	1	1	1		
13	6G5–82119–00	COVER, LEAD WIRE CUBIERTA DE CABLE CONDUCTOR	1	1	1	1		
14	61A–81941–00	STARTER RELAY ASSY RELE DE ARRANQUE	1	1	1	1		
15	61A–81952–00	HOLDER, RELAY SOSTEN DE RELE	1	1	1	1		
16	97780–50612	SCREW, TAPPING TORNILLO DE CABEZA DE CONO ACH	1	1	1	1		
17	61A–82150–00	FUSE HOLDER ASSY PORTA-FUSIBLES COMPLETO	3	3	3	3		
18	61A–82151–00	.FUSE (12V-80A) .FUSIBLE (12V-80A)	1	1	1	1		
19	61A–82153–00	STAY, FUSE HOLDER ABRAZADERA FUSIBLE	1	1	1	1		
20	61A–81960–02	RECTIFIER & REGULATOR ASSY RECTIFICADOR Y REGULADOR	1	1	1	1		
21	69J–81975–A0	PLATE, RECTIFIER FITTING PLACA ACCESORIA RECTIF.	1	1	1	1		
22	69J–81972–01–1S	COVER, RECTIFIER CUBIERTA DE RECTIFICADOR	1	1	1	1		
23	97013–06025	BOLT PERNO	4	4	4	4		
24	92903–06600	WASHER, PLATE RONDANA SENCILLA	4	4	4	4		
25	97013–06030	BOLT PERNO	2	2	2	2		
26	92903–06600	WASHER, PLATE RONDANA SENCILLA	2	2	2	2		
27	90445–09224	HOSE TUBO	1	1	1	1		

FIG. 15 ELECTRICAL 3 — EQUIPO ELECTRICO 3

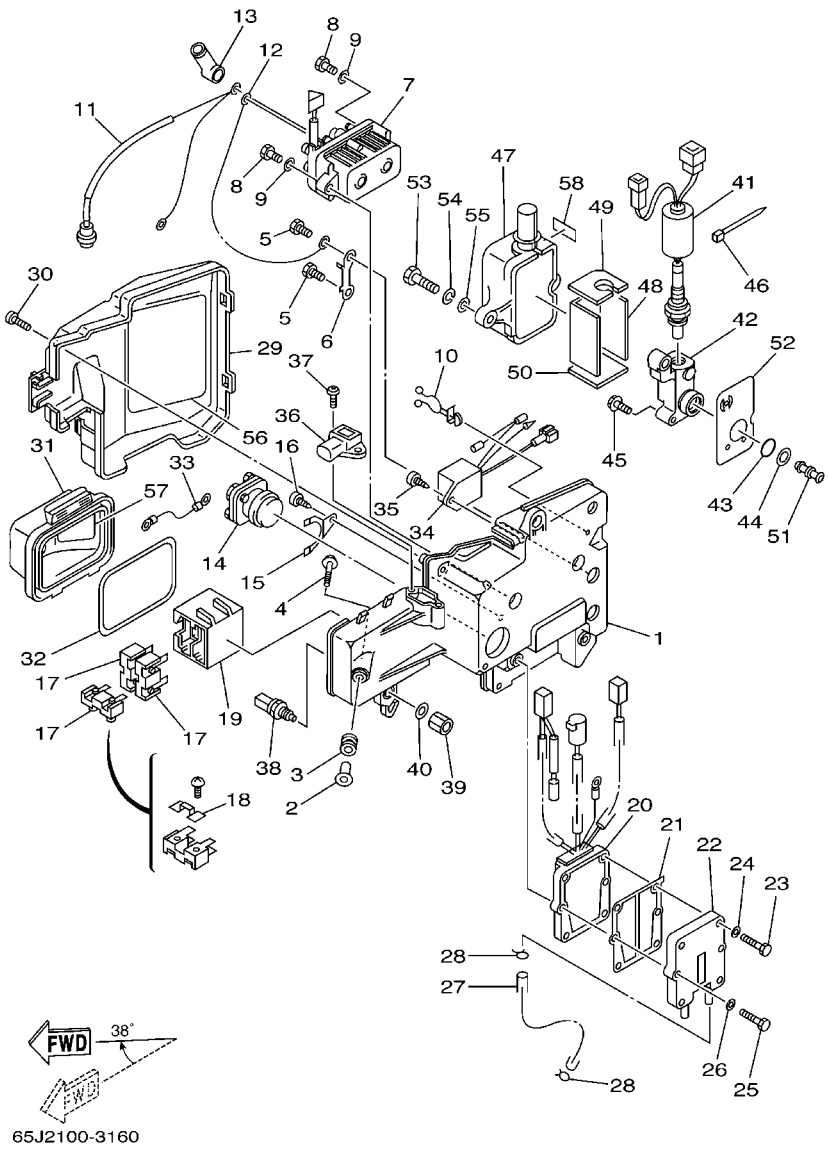

REF. NO.	PART NO. CODIGO Nº	DESCRIPTION DESCRIPCION	65J3	65L3	65K3	65M3		REMARKS OBSERVACIONES
28	90467–08004	CLIP PRESILLA	2	2	2	2		
29	65L–81942–00	COVER CUBIERTA	1	1	1	1		
30	90169–05M00	SCREW, TRUSS HEAD TAPPING TORNILLO	2	2	2	2		
31	61A–82154–01	CASE CAJA	1	1	1	1		
32	61A–82176–00	DAMPER AMORTIGUADOR	1	1	1	1		
33	61A–82117–00	WIRE, LEAD CABLE CONDUCTOR	1	1	1	1		
34	65L–81950–01	RELAY ASSY RELE COMPLETO	1	1	1	1		
35	97780–60625	SCREW, TAPPING TORNILLO DE CABEZA DE CONO ACH	1	1	1	1		
36	67H–82380–00	SENSOR, PRESSURE SENSOR DE PRESION	1	1	1	1		
37	97780–60625	SCREW, TAPPING TORNILLO DE CABEZA DE CONO ACH	2	2	2	2		
38	65L–85886–00	THERMOSENSOR TERMICA SENSORIO	1	1	1	1		
39	90170–12M36	NUT TUERCA	1	1	1	1		
40	90201–12M34	WASHER, PLATE ARANDELA PLANA	1	1	1	1		
41	65L–8592A–01	SENSOR SENSOR	1	1	1	1		
42	69L–11395–00	HOLDER RETEN	1	1	1	1		
43	93210–17003	O-RING ANILLO O	1	1	1	1		
44	69L–11397–00	GASKET EMPAQUE	1	1	1	1		
45	90119–06M74	BOLT, WITH WASHER TORNILLO CON ARANDELA	3	3	3	3		
46	90465–13M18	CLAMP BRIDA	1	1	1	1		
47	65L–85832–00	CASE, UNDER CAJA SUPERIOR	1	1	1	1		
48	65L–11354–00	GASKET EMPAQUE	1	1	1	1		
49	65L–1131N–00	GASKET, HOLDER SOPORTE DE EMPAQUE	1	1	1	1		
50	65L–11396–00	GASKET, HOLDER EMPAQUE DE RETENEDOR	1	1	1	1		
51	65L–11353–11	JOINT TOBERA UNION	1	1	1	1		
52	69L–11357–00	SEAL, CYLINDER 3 RETEN ACEITE CILINDRO 3	1	1	1	1		
53	97095–06030	BOLT PERNO	2	2	2	2		
54	92995–06100	WASHER, SPRING ARANDELA	2	2	2	2		

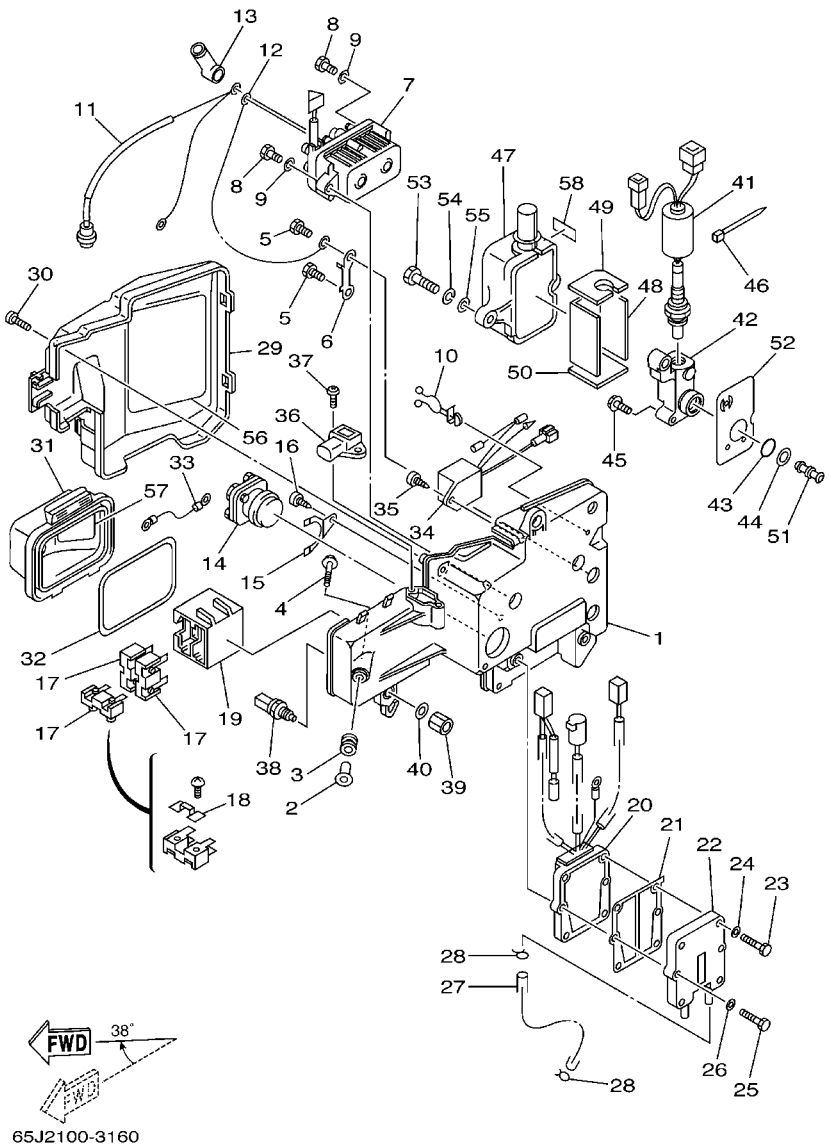

FIG. 15 ELECTRICAL 3 — EQUIPO ELECTRICO 3

REF. NO.	PART NO. CODIGO Nº	DESCRIPTION DESCRIPCION	65J3	65L3	65K3	65M3		REMARKS OBSERVACIONES
55	92995–06600	WASHER ARANDELA	2	2	2	2		
56	65L–81919–00	GRAPHIC, REGULATOR CALCAMONIA DE REGULADOR	1	1	1	1		
57	61A–81919–00	GRAPHIC, REGULATOR CALCAMONIA DE REGULADOR	1	1	1	1		
58	65L–83625–40	MARK 5 MARCA 5	1	1	1	1		

FIG. 16 ELECTRICAL 4 — EQUIPO ELECTRICO 4

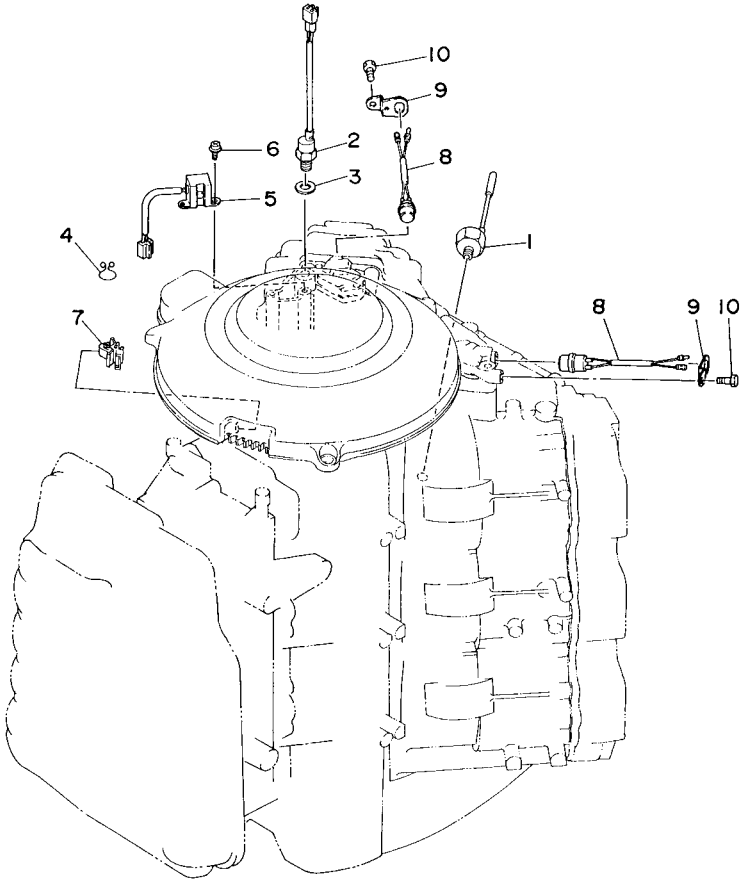

65J0010-7150

REF. NO.	PART NO. CODIGO Nº	DESCRIPTION DESCRIPCION	65J3	65L3	65K3	65M3		REMARKS OBSERVACIONES
1	61A–85780–00	SENSOR, KNOCK CHOCAR SENSORIO	1	1	1	1		
2	61A–85790–00	THERMOSENSOR ASSY TERMICA SENSORIO	1	1	1	1		
3	92990–10600	WASHER, PLATE ARANDELA PLANA	1	1	1	1		
4	90464–12M48	CLAMP BRIDA	1	1	1	1		
5	61A–85895–00	CRANK POSITION SENDER SENSOR, POSICION DE CIGUENAL	1	1	1	1		
6	97885–05012	SCREW, PAN HEAD TORNILLO A MUESCA	2	2	2	2		
7	90464–09M47	CLAMP BRIDA	1	1	1	1		
8	61A–82560–10	THERMO SWITCH ASSY INTER. DE TERMO	2	2	2	2		
9	61A–8252U–00	COVER CUBIERTA	2	2	2	2		
10	97080–06012	BOLT PERNO	2	2	2	2		

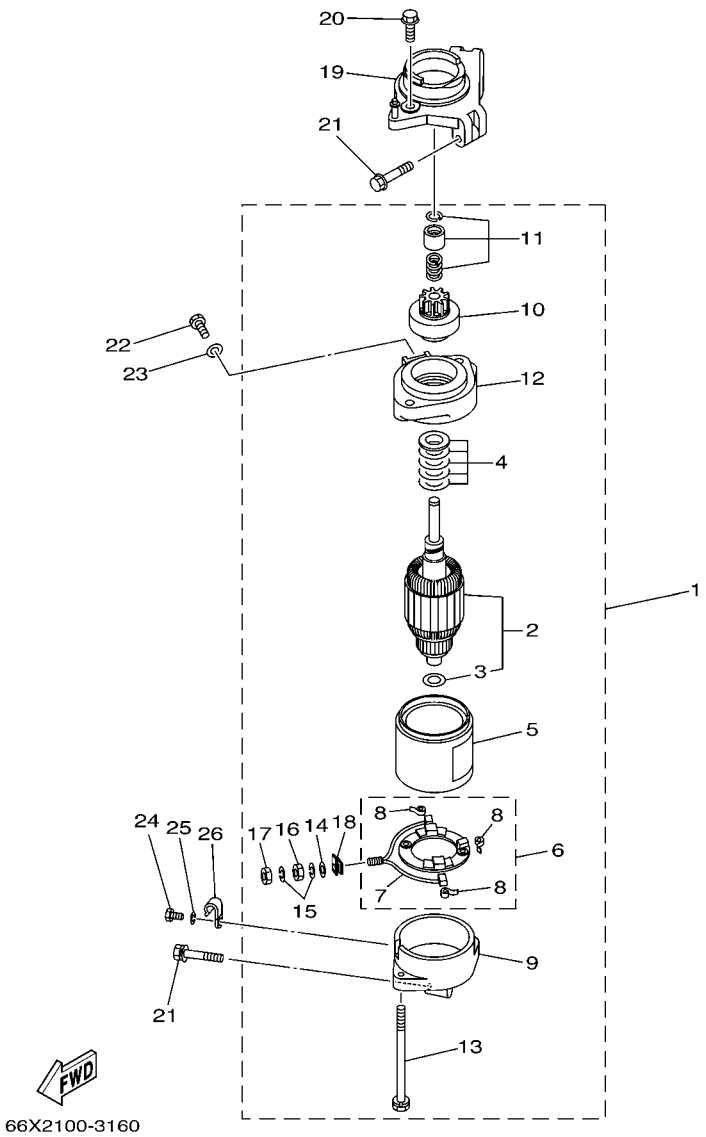

FIG. 17 STARTING MOTOR — MOTOR DE ARRANQUE

REF. NO.	PART NO. CODIGO Nº	DESCRIPTION DESCRIPCION	65J3	65L3	65K3	65M3		REMARKS OBSERVACIONES
1	69L–81800–00	STARTING MOTOR ASSY MOTOR DE ARRANQUE COMPLETO	1	1	1	1		
2	61A–81850–01	.ARMATURE ASSY .INDUCIDO COMPLETO	1	1	1	1		
3	61A–81824–00	.WASHER 2 .ARANDELA 2	1	1	1	1		
4	61A–81809–00	.WASHER KIT .JUEGO DE ARANDELA	1	1	1	1		
5	6K7–81810–00	.STATOR ASSY .ESTATOR COMPLETO	1	1	1	1		
6	61A–81840–00	.BRUSH HOLDER ASSY .SOSTEN DE ESCOBILLA COMPLETO	1	1	1	1		
7	6K7–81801–10	..BRUSH SET ..JUEGO DE ESCOBILLA	1	1	1	1		
8	6E5–81813–10	..SPRING, BRUSH ..RESORTE DE ESCOBILLA	3	3	3	3		
9	61A–81820–00	.REAR BRACKET ASSY .CUBIERTA TRASERA COMPL	1	1	1	1		
10	61A–81807–00	.GEAR ASSY, STARTING MOTOR .PINON CONJUNTO	1	1	1	1		
11	61H–81857–00	.RETAINER .SEGURO	1	1	1	1		
12	61A–81830–00	.FRONT BRACKET ASSY .SOPORTE DELANTERO COMPLETO	1	1	1	1		
13	6K7–81826–10	.BOLT .PERNO	2	2	2	2		
14	6E5–8182E–10	.WASHER .RONDANA	1	1	1	1		
15	6E5–8182F–10	.WASHER .RONDANA	2	2	2	2		
16	6E5–8182A–10	.NUT .TUERCA	1	1	1	1		
17	6E5–8182K–10	.NUT .TUERCA	1	1	1	1		
18	6K7–8182G–10	.BUSH, TERMINAL .BUJE DE TERMINAL	1	1	1	1		
19	61A–81822–00–94	BRACKET, STARTING MOTOR SOPORTE DE MOTOR DE ARRANQUE	1	1	1	1		
20	90119–08M76	BOLT, WITH WASHER TORNILLO CON ARANDELA	2	2	2	2		
21	90119–08M77	BOLT, WITH WASHER TORNILLO CON ARANDELA	3	3	3	3		
22	97095–08016	BOLT PERNO	1	1	1	1		
23	92995–08600	WASHER ARANDELA	1	1	1	1		
24	97095–06012	BOLT PERNO	1	1	1	1		
25	92995–06600	WASHER ARANDELA	1	1	1	1		
26	90465–06M86	CLAMP BRIDA	1	1	1	1		

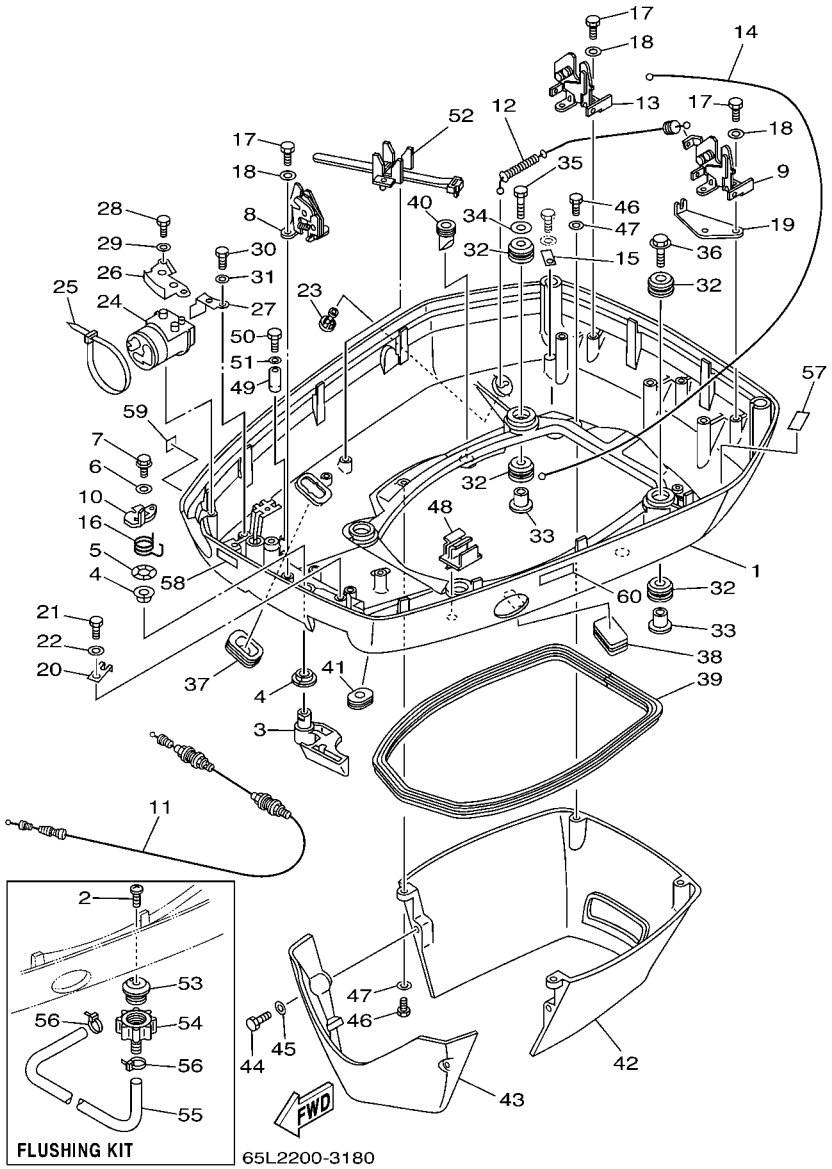

FIG. 18 BOTTOM COWLING CUBIERTA INFERIOR

REF. NO.	PART NO. CODIGO Nº	DESCRIPTION DESCRIPCION	65J3	65L3	65K3	65M3		REMARKS OBSERVACIONES
1	61A–42711–05–8D	COWLING, BOTTOM CUBIERTA INFERIOR	1	1	1	1		
2	90169–05M00	SCREW, TRUSS HEAD TAPPING TORNILLO	1	1	1	1		FLUSHING KIT FLUSHING KIT
3	61A–42815–01–8D	LEVER, CLAMP PALANCA ABRAZADERA	1	1	1	1		
4	90386–13M88	BUSH BUJE	2	2	2	2		
5	90206–13M10	WASHER, WAVE ARANDELA ONDULADA	1	1	1	1		
6	90201–06M30	WASHER, PLATE ARANDELA PLANA	1	1	1	1		
7	90109–06M50	BOLT PERNO	1	1	1	1		
8	6R3–42824–00	BASE, CLAMP LEVER BASE, GRAMPA PALANCA	1	1	1	1		
9	6R3–42811–01	STAY SOPORTE GRAMPA	1	1	1	1		
10	6R3–42816–00	LEVER, CLAMP PALANCA ABRAZADERA	1	1	1	1		
11	6R3–42850–10	WIRE COMPLETE CABLE COMPLETO	1	1	1	1		
12	61A–42850–01	WIRE COMPLETE CABLE COMPLETO	1	1	1	1		
13	6R3–42811–10	STAY SOPORTE GRAMPA	1	1	1	1		
14	61A–42850–20	WIRE COMPLETE CABLE COMPLETO	1	1	1	1		
15	682–44117–00	BRACKET SOPORTE	1	1	1	1		
16	6R3–42813–00	SPRING, CLAMP LEVER RESORTE	1	1	1	1		
17	97095–06016	BOLT PERNO	6	6	6	6		
18	92995–06600	WASHER ARANDELA	6	6	6	6		
19	6N7–42828–00	PLATE, CLAMP PLACA, GRAMPA	1	1	1	1		
20	6R3–42828–00	PLATE, CLAMP PLACA, GRAMPA	1	1	1	1		
21	97095–06010	BOLT PERNO	1	1	1	1		
22	92995–06600	WASHER ARANDELA	1	1	1	1		
23	6E5–44391–00	NIPPLE, HOSE NIPLE MANGUERA	1	1	1	1		
24	61A–42725–12	GROMMET TAPON	1	1	1	1		
25	90465–13M30	CLAMP BRIDA	1	1	1	1		
26	61A–42738–02–5B	PLATE, FITTING PLACA DE AJUSTE	1	1	1	1		
27	64D–42738–10–5B	PLATE, FITTING PLACA DE AJUSTE	1	1	1	1		

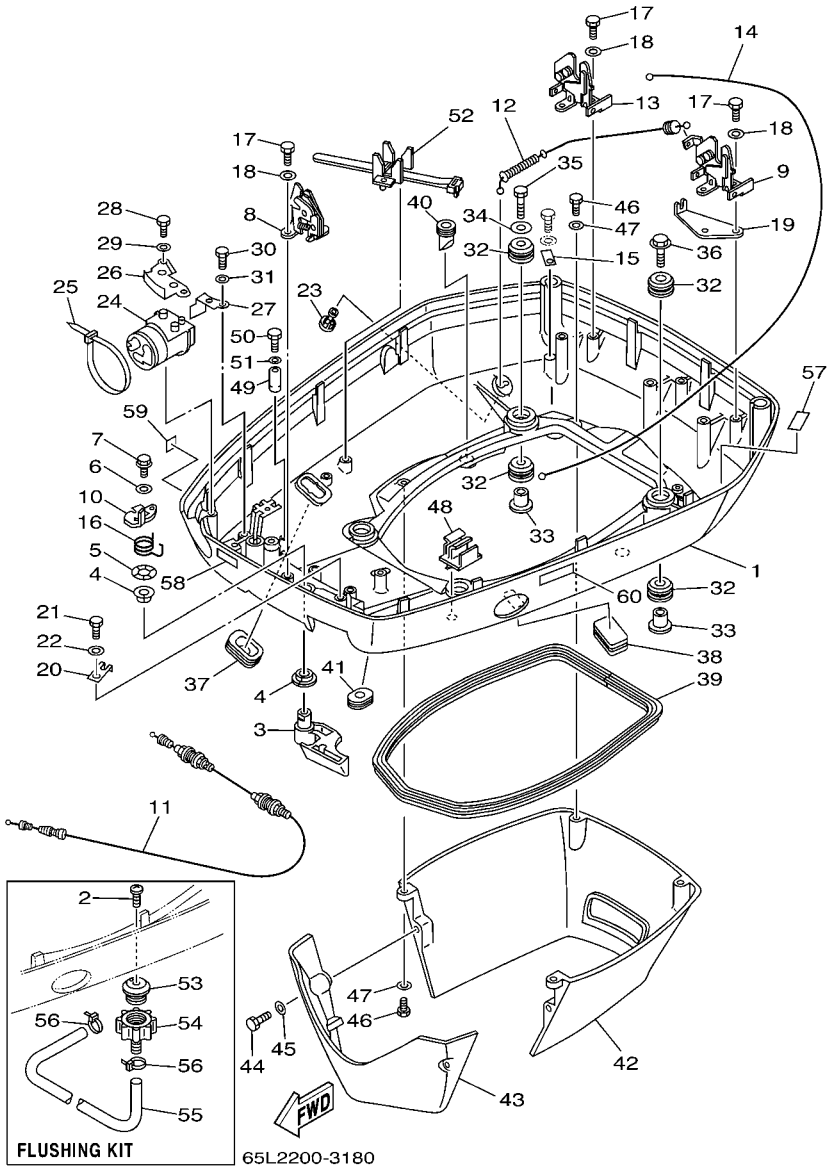

FIG. 18 BOTTOM COWLING — CUBIERTA INFERIOR

REF. NO.	PART NO. CODIGO Nº	DESCRIPTION DESCRIPCION	65J3	65L3	65K3	65M3		REMARKS OBSERVACIONES
28	97095–06016	BOLT PERNO	2	2	2	2		
29	92995–06600	WASHER ARANDELA	2	2	2	2		
30	97095–06012	BOLT PERNO	1	1	1	1		
31	92995–06600	WASHER ARANDELA	1	1	1	1		
32	90480–22M81	GROMMET TAPON	8	8	8	8		
33	90387–08M37	COLLAR COLLAR	4	4	4	4		
34	90201–08M54	WASHER, PLATE ARANDELA PLANA	1	1	1	1		
35	97075–08035	BOLT PERNO	1	1	1	1		
36	90119–08M22	BOLT, WITH WASHER TORNILLO CON ARANDELA	3	3	3	3		
37	688–42726–10	GROMMET TAPON	1	1	1	1		
38	6H4–42726–00	GROMMET TAPON	1	1	1	1		
39	61A–42716–00	RUBBER, SEAL 1 SELLO DE GOMA 1	1	1	1	1		
40	61A–42717–00	RUBBER, SEAL 2 GOMA	4	4	4	4		
41	61A–42727–00	GROMMET TAPON	1	1	1	1		
42	61A–42741–01–8D	APRON MANDIL	1	1	1	1		
43	61A–42771–01–8D	APRON MANDIL	1	1	1	1		
44	97095–06030	BOLT PERNO	2	2	2	2		
45	92995–06600	WASHER ARANDELA	2	2	2	2		
46	97095–06020	BOLT PERNO	4	4	4	4		
47	92995–06600	WASHER ARANDELA	4	4	4	4		
48	6E5–82594–00	CLAMP GRAMPA	1	1	1	1		
49	6E5–82588–00	PLATE PLACA	1	1	1	1		
50	97095–06020	BOLT PERNO	1	1	1	1		
51	92995–06600	WASHER ARANDELA	1	1	1	1		
52	688–82594–00	CLAMP GRAMPA	1	1	1	1		
53	6R3–12572–00	ADAPTER ADAPTADOR	1	1	1	1		FLUSHING KIT FLUSHING KIT
54	6R3–12580–00	JOINT ASSY ACOPLAR COMP.	1	1	1	1		FLUSHING KIT FLUSHING KIT

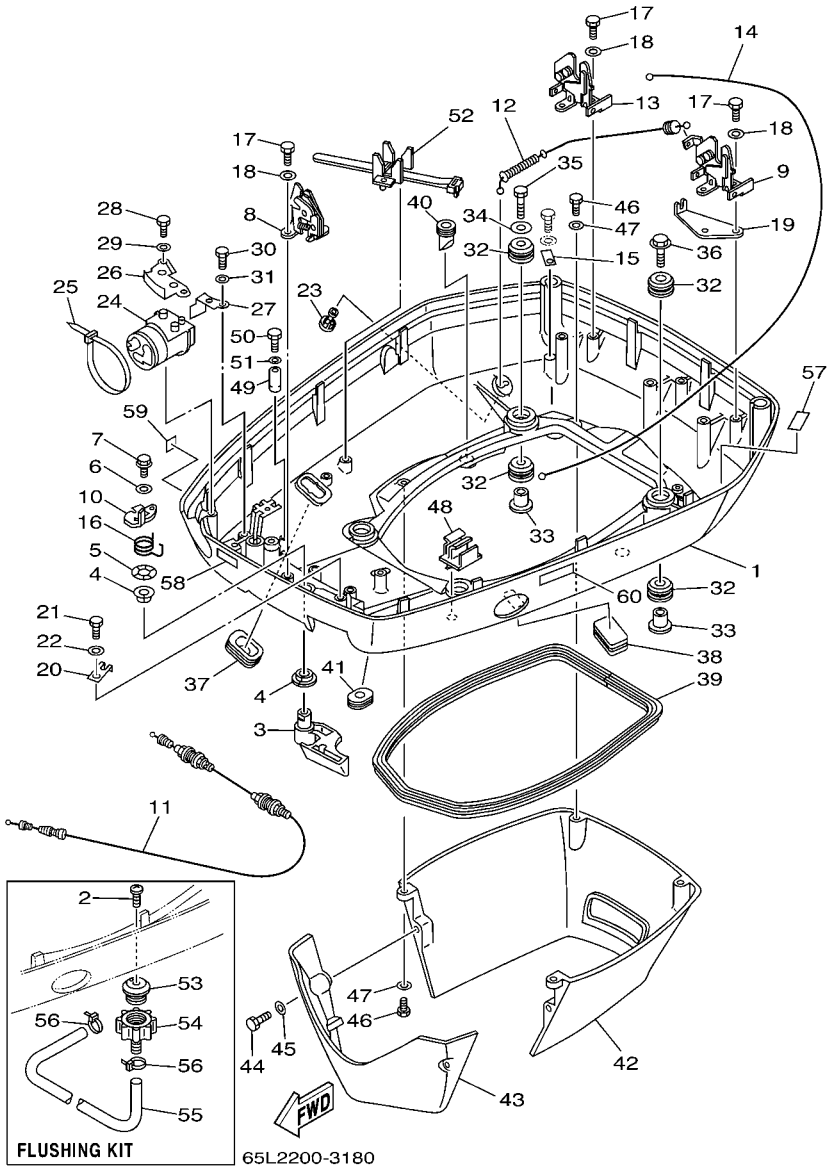

FIG. 18 BOTTOM COWLING CUBIERTA INFERIOR

REF. NO.	PART NO. CODIGO Nº	DESCRIPTION DESCRIPCION	65J3	65L3	65K3	65M3		REMARKS OBSERVACIONES
55	90445–11M36	HOSE (L540) TUBO (L540)	1	1	1	1		FLUSHING KIT FLUSHING KIT
56	90465–11M10	CLAMP BRIDA	2	2	2	2		FLUSHING KIT FLUSHING KIT
57	6K7–42791–00	MARK 1 MARCA 1	1	1	1	1		
58	65L–2415E–60	LABEL, CAUTION EMBLEMA DE PRECAUCTON	1	1	1	1		
59	6A1–28176–00	LABEL, CAUTION ETIQUETA DE PRECAUCION	1	1	1	1		FOR CAR(EPA-CE) FOR CAR(EPA-CE)
60	6E3–8257H–00	PLATE, MARK PLACA DE MARCA	1	1	1	1		FOR CAR(EPA-CE) FOR CAR(EPA-CE)

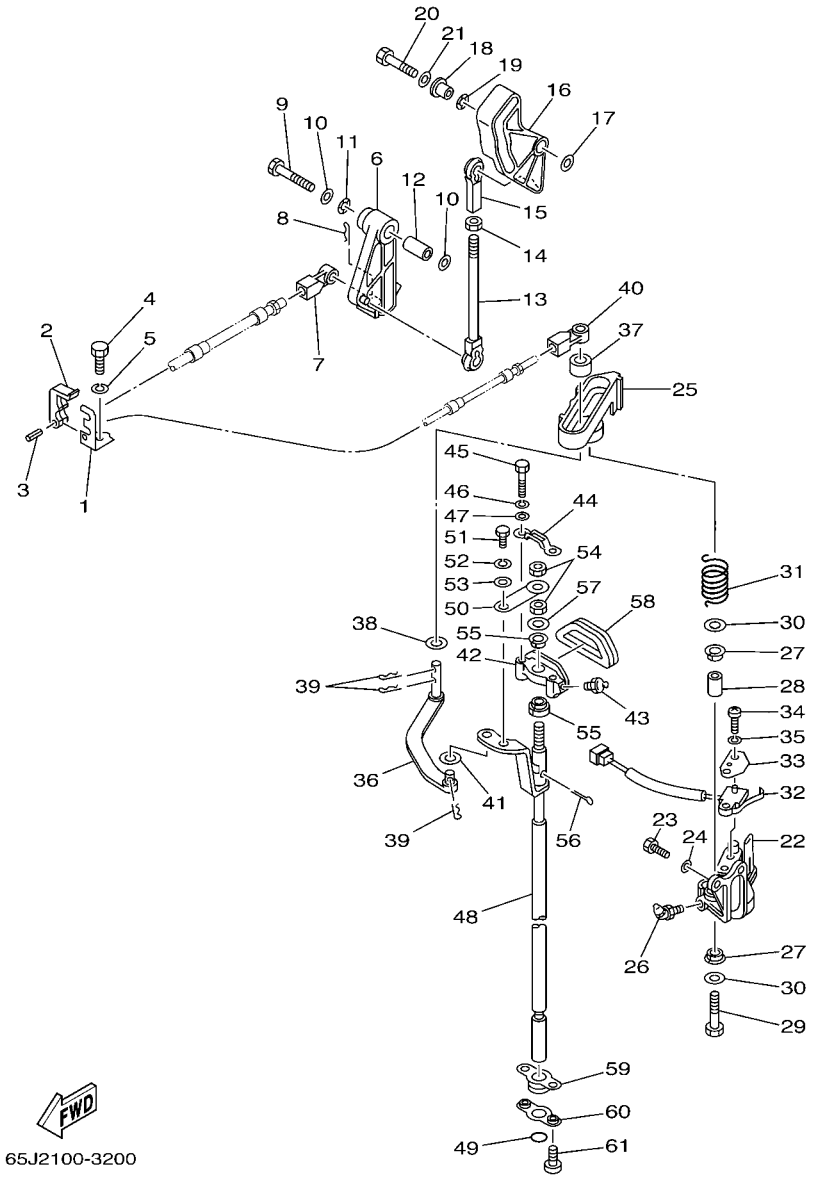

FIG. 19 CONTROL — CONTROL

REF. NO.	PART NO. CODIGO Nº	DESCRIPTION DESCRIPCION	65J3	65L3	65K3	65M3		REMARKS OBSERVACIONES
1	65L–48531–00	BRACKET, REMOTE CONTROL 1 SOPORTE DE CONTROL REMOTO	1	1	1	1		
2	663–48538–00	CLAMP, CABLE 1 GRAMPA DE CABLE	1	1	1	1		
3	91690–30010	PIN, SPRING PASADOR DE RESORTE	1	1	1	1		
4	97095–08020	BOLT PERNO	1	1	1	1		
5	92995–08100	WASHER ARANDELA	1	1	1	1		
6	65L–41632–01	LEVER, MAGNETO CONTROL PALANCA DE CONTROL DE MAGNETO	1	1	1	1		
7	6E5–48344–00	CABLE END, REMOTE CONTROL BASE CONTROL	1	1	1	1		
8	90468–18008	CLIP PRESILLA	1	1	1	1		
9	97013–08045	BOLT PERNO	1	1	1	1		
10	92990–08200	WASHER, PLAIN ARANDELA PLANA	2	2	2	2		
11	90206–12M00	WASHER, WAVE ARANDELA ONDULADA	1	1	1	1		
12	90387–08M16	COLLAR COLLAR	1	1	1	1		
13	61A–41237–00	JOINT, LINK CONECTOR	1	1	1	1		
14	95380–05600	NUT TUERCA	1	1	1	1		
15	682–41237–00	JOINT, LINK CONECTOR	1	1	1	1		
16	65L–41213–00	CAM, ACCEL. LEVA ACELERADOR	1	1	1	1		
17	90201–06M31	WASHER, PLATE ARANDELA PLANA	1	1	1	1		
18	90387–06M29	COLLAR COLLAR	1	1	1	1		
19	90206–10M04	WASHER, WAVE ARANDELA ONDULADA	1	1	1	1		
20	97013–06030	BOLT PERNO	1	1	1	1		
21	92903–06600	WASHER, PLATE RONDANA SENCILLA	1	1	1	1		
22	61A–44117–01–1S	BRACKET SOPORTE	1	1	1	1		
23	97095–06016	BOLT PERNO	2	2	2	2		
24	92995–06600	WASHER ARANDELA	2	2	2	2		
25	61A–44176–00–1S	BRACKET SOPORTE	1	1	1	1		
26	93700–06M01	NIPPLE, GREASE BOQUILLA DE ENGRASAR	1	1	1	1		
27	90386–12069	BUSH BUJE	2	2	2	2		

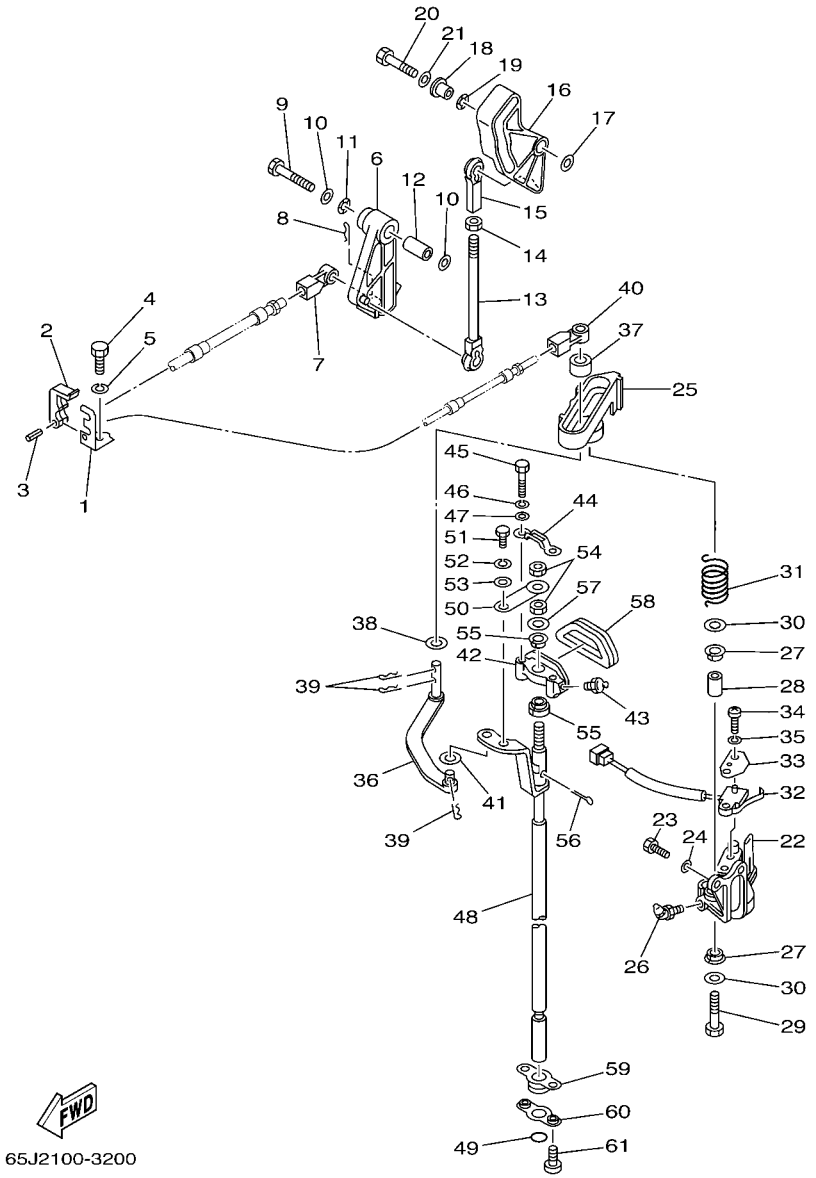

FIG. 19 CONTROL — CONTROL

REF. NO.	PART NO. CODIGO Nº	DESCRIPTION DESCRIPCION	65J3	65L3	65K3	65M3		REMARKS OBSERVACIONES
28	90387–08M09	COLLAR COLLAR	1	1	1	1		
29	97095–08035	BOLT PERNO	1	1	1	1		
30	92995–08200	WASHER ARANDELA	2	2	2	2		
31	90508–20M31	SPRING, TORSION RESORTE DE TORSION	1	1	1	1		
32	61A–8259F–00	SWITCH ASSY INTERRUPTOR	1	1	1	1		
33	61A–82588–01	PLATE PLACA	1	1	1	1		
34	97885–04016	SCREW, PAN HEAD TORNILLO A MUESCA	2	2	2	2		
35	92995–04100	WASHER ARANDELA	2	2	2	2		
36	61A–44121–00	LEVER, SHIFT ROD PALANCA VARILLA CAMBIOS	1	1	1	1		
37	6E5–44122–00	BUSHING, SHIFT ROD LEVER BUJE PALANCA VARILLA DE CAMBIO	1	1	1	1		
38	90202–08M20	WASHER, PLATE ARANDELA DE PLANA	1	1	1	1		
39	90468–18008	CLIP PRESILLA	3	3	3	3		
40	6E5–48344–00	CABLE END, REMOTE CONTROL BASE CONTROL	1	1	1	1		
41	90202–06007	WASHER, PLATE ARANDELA DE PLANA	1	1	1	1		
42	61A–44118–00–8D	BRACKET SOPORTE	1	1	1	1		
43	93700–06M03	NIPPLE, GREASE BOQUILLA DE ENGRASAR	1	1	1	1		
44	61A–44116–00	SPRING RESORTE	1	1	1	1		
45	97095–06030	BOLT PERNO	2	2	2	2		
46	92995–06100	WASHER, SPRING ARANDELA	2	2	2	2		
47	92995–06600	WASHER ARANDELA	2	2	2	2		
48	61A–44120–22	HANDLE GEAR SHIFT ASSY MANIJA DE CAMBIO COMPL	1	1	1	1		
49	93210–09165	O-RING ANILLO O	1	1	1	1		
50	61A–44112–00	STAY, HANDLE GEAR SHIFT SOPORTE HANIJA DE CABIO DE MAR	1	1	1	1		
51	97013–06012	BOLT PERNO	1	1	1	1		
52	92903–06100	WASHER, SPRING RONDANA SENCILLA	1	1	1	1		
53	92903–06600	WASHER, PLATE RONDANA SENCILLA	1	1	1	1		
54	95313–08600	NUT TUERCA	2	2	2	2		

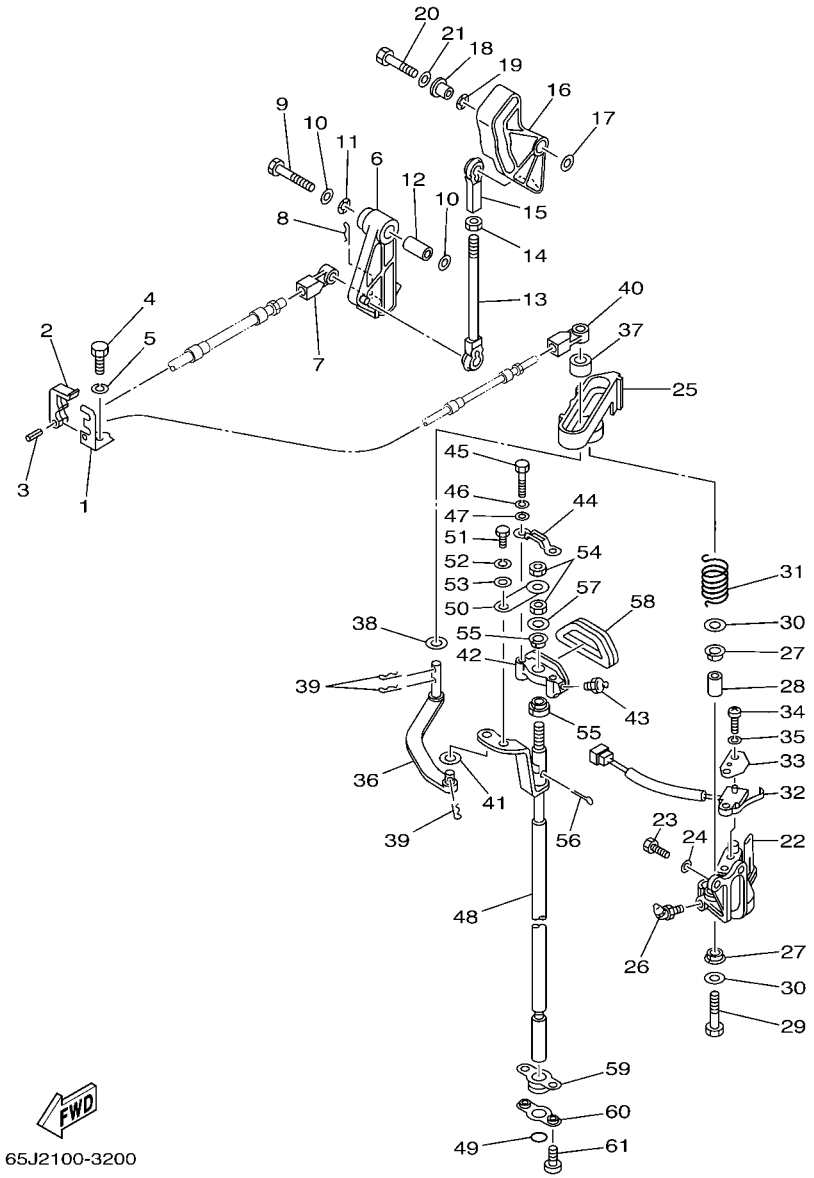

FIG. 19 CONTROL — CONTROL

REF. NO.	PART NO. CODIGO Nº	DESCRIPTION DESCRIPCION	65J3	65L3	65K3	65M3		REMARKS OBSERVACIONES
55	90386–90M90	BUSH BUJE	2	2	2	2		
56	91490–20012	PIN, COTTER CHAVETA	1	1	1	1		
57	90201–09M02	WASHER, PLATE ARANDELA PLANA	1	1	1	1		
58	61A–15315–00	SEAL, CRANKCASE SELLO DE CARTER	1	1	1	1		
59	61A–42724–00	GROMMET TAPON	1	1	1	1		
60	61A–44138–00	WASHER ARANDELA	1	1	1	1		
61	97885–06008	SCREW, PAN HEAD TORNILLO A MUESCA	2	2	2	2		

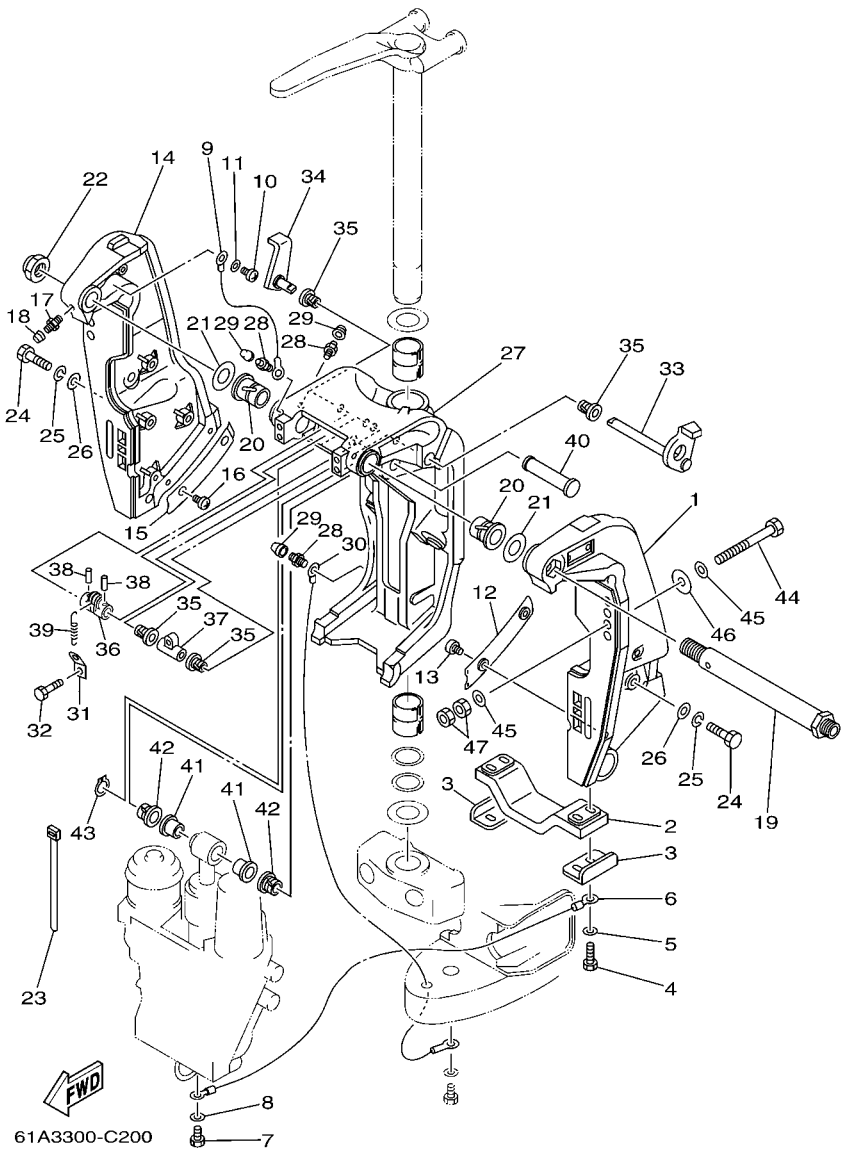

FIG. 20 BRACKET 1 SOPORTE 1

REF. NO.	PART NO. CODIGO Nº	DESCRIPTION DESCRIPCION	65J3	65L3	65K3	65M3		REMARKS OBSERVACIONES
1	61A–43111–23–8D	BRACKET, CLAMP SOPORTE DE LA ABRAZADERA	1	1	1	1		
2	6G5–45251–02	ANODE CATODE	1	1	1	1		
3	6G5–44526–00	PLATE PLACA 1	2	2	2	2		
4	97095–06025	BOLT PERNO	4	4	4	4		
5	92995–06600	WASHER ARANDELA	4	4	4	4		
6	6H1–82148–00	WIRE, LEAD 4 CABLE CONDUCTOR 4	1	1	1	1		
7	97095–06010	BOLT PERNO	1	1	1	1		
8	92995–06600	WASHER ARANDELA	1	1	1	1		
9	6E5–82148–00	WIRE, LEAD 4 CABLE CONDUCTOR 4	1	1	1	1		
10	97885–06012	SCREW, PAN HEAD TORNILLO A MUESCA	1	1	1	1		
11	92995–06600	WASHER ARANDELA	1	1	1	1		
12	61A–43132–00	WASHER, FRICTION ARANDELA DE FRICCION	1	1	1	1		
13	97885–06010	SCREW, PAN HEAD TORNILLO A MUESCA	2	2	2	2		
14	61A–43112–23–8D	BRACKET, CLAMP SOPORTE DE LA ABRAZADERA	1	1	1	1		
15	61A–43133–00	WASHER,FRICTION RONDANA	1	1	1	1		
16	97885–06010	SCREW, PAN HEAD TORNILLO A MUESCA	2	2	2	2		
17	93700–06M03	NIPPLE, GREASE BOQUILLA DE ENGRASAR	1	1	1	1		
18	663–45119–00	CAP, GREASE NIPPLE TAPA DE GRASERA	1	1	1	1		
19	6R3–43131–00	BOLT, CLAMP BRACKET TORNILLO DE ABRAZADERA DEL SOP	1	1	1	1		
20	90386–25M31	BUSH BUJE	2	2	2	2		
21	90201–26M59	WASHER, PLATE ARANDELA PLANA	2	2	2	2		
22	90185–22M11	NUT, SELF-LOCKING TUERCA AUTOBLOCANTE	1	1	1	1		
23	90465–11M10	CLAMP BRIDA	2	2	2	2		
24	97095–10045	BOLT PERNO	8	8	8	8		
25	92995–10100	WASHER ARANDELA	8	8	8	8		
26	92995–10600	WASHER ARANDELA	8	8	8	8		
27	61A–43311–21–8D	BRACKET, SWIVEL 1 SOPORTE GIRATORIO 1	1	1	1	1		

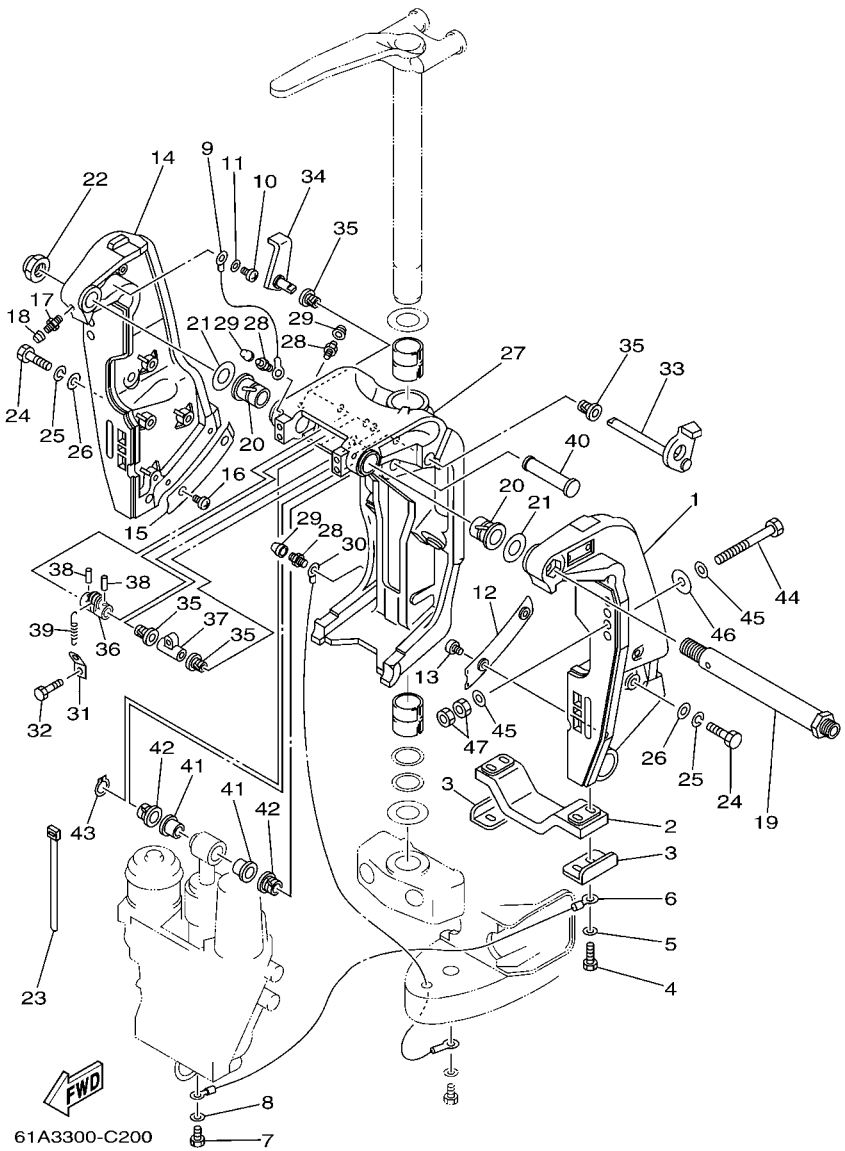

FIG. 20 BRACKET 1 SOPORTE 1

REF. NO.	PART NO. CODIGO Nº	DESCRIPTION DESCRIPCION	65J3	65L3	65K3	65M3		REMARKS OBSERVACIONES
28	93700–06M03	NIPPLE, GREASE BOQUILLA DE ENGRASAR	5	5	5	5		
29	663–45119–00	CAP, GREASE NIPPLE TAPA DE GRASERA	5	5	5	5		
30	61A–82147–20	WIRE, LEAD 4 CABLE CONDUCTOR 4	1	1	1	1		
31	6G5–43144–00	HOOK, SPRING GANCHO	1	1	1	1		
32	97095–06010	BOLT PERNO	1	1	1	1		
33	61A–43181–01	LEVER, TILT STOP PALANCA TOPE INCLINACION	1	1	1	1		
34	6G5–43185–02	LEVER, TILT STOP PALANCA TOPE INCLINACION	1	1	1	1		
35	90386–10M16	BUSH BUJE	4	4	4	4		
36	6G5–43148–10	COLLAR, DISTANCE COLLAR	1	1	1	1		
37	90387–10M02	COLLAR COLLAR	1	1	1	1		
38	91690–30020	PIN, SPRING PASADOR DE RESORTE	2	2	2	2		
39	90506–20011	SPRING, TENSION RESORTE DE TENSION	1	1	1	1		
40	6E5–43126–02	PIN, UPPER SHOCK MOUNT PASADOR DE AMORTIGUADOR SUPERI	1	1	1	1		
41	90386–18M63	BUSH BUJE	2	2	2	2		
42	90386–18M14	BUSH BUJE	2	2	2	2		
43	93410–18M02	CIRCLIP SEGURO	1	1	1	1		
44	90101–12M05	BOLT (L:130MM) TORNILLO (L:130MM)	4	4	4	4		
45	90201–13M01	WASHER, PLATE ARANDELA PLANA	8	8	8	8		
46	90201–12M05	WASHER, PLATE ARANDELA PLANA	4	4	4	4		
47	95380–12600	NUT TUERCA	8	8	8	8		

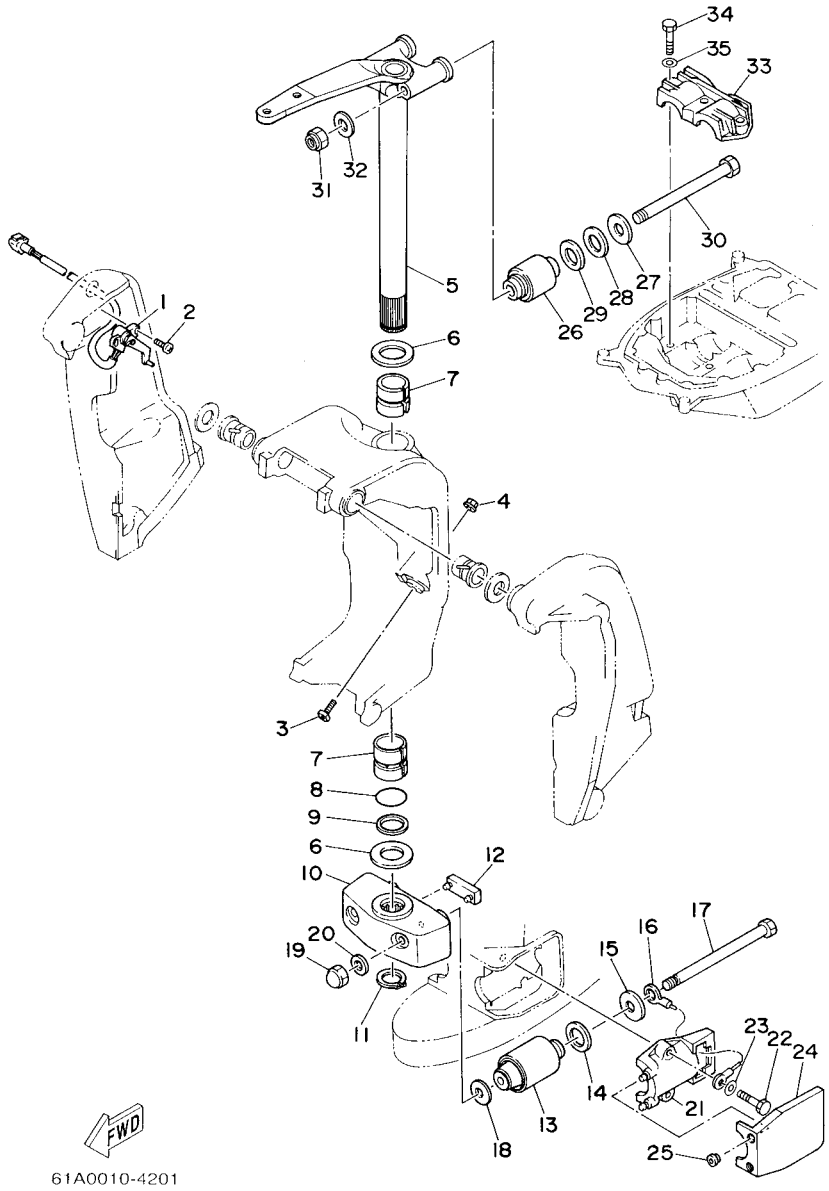

FIG. 21 BRACKET 2 SOPORTE 2

REF. NO.	PART NO. CODIGO Nº	DESCRIPTION DESCRIPCION	65J3	65L3	65K3	65M3		REMARKS OBSERVACIONES
1	61A–83672–02	TRIM SENDER TRANSMISOR DE INCLINADOR	1	1	1	1		
2	97885–06016	SCREW, PAN HEAD TORNILLO A MUESCA	2	2	2	2		
3	61A–43376–00	BOLT, THRUST RECEIVER TORNILLO RECEPTOR	2	2	2	2		
4	95780–10300	NUT, FLANGE TUERCA	2	2	2	2		
5	69J–42510–00–8D	STEERING BRACKET ASSY SOPORTE DIRECCION COMPL.	1	1	1	1		
6	90201–40M00	WASHER, PLATE ARANDELA PLANA	2	2	2	2		
7	90386–39M89	BUSH BUJE	2	2	2	2		
8	93210–35321	O-RING ANILLO O	1	1	1	1		
9	90202–40M47	WASHER, PLATE ARANDELA DE PLANA	1	1	1	1		
10	61A–44551–01–8D	HOUSING, LOWER MOUNT RUBBER CAJA AMORTIGUADOR INFERIOR HU	1	1	1	1		
11	93410–37M04	CIRCLIP SEGURO	1	1	1	1		
12	61A–44575–00	DAMPER, LOWER MOUNT RUBBER AMORTIGUADOR INFERIOR	1	1	1	1		
13	61A–44555–01–94	MOUNT DAMPER, LOWER SIDE AMORTIGUADOR DE HULE LADO INFE	2	2	2	2		
14	90202–32M19	WASHER, PLATE ARANDELA DE PLANA	2	2	2	2		
15	90201–16M55	WASHER, PLATE ARANDELA PLANA	2	2	2	2		
16	6E5–82149–00	WIRE, LEAD 3 CABLE CONDUCTOR 3	1	1	1	1		
17	90109–14M48	BOLT PERNO	2	2	2	2		
18	90201–15M58	WASHER, PLATE ARANDELA PLANA	2	2	2	2		
19	95380–14800	NUT TUERCA	2	2	2	2		
20	92995–14600	WASHER ARANDELA	2	2	2	2		
21	61A–44552–01–94	HOUSING, LOWER MOUNT RUBBER CAJA AMORTIGUADOR INFERIOR HU	2	2	2	2		
22	97095–10045	BOLT PERNO	4	4	4	4		
23	92995–10600	WASHER ARANDELA	4	4	4	4		
24	61A–44553–00–8D	COVER, LOWER MOUNT CUBIERTA,AMORTIGUADOR INFERIOR	2	2	2	2		
25	6A0–15789–00	DAMPER AMORTIGUADOR	4	4	4	4		
26	61A–44514–00–94	MOUNT DAMPER, UPPER SIDE AMORTIGUADOR LADO SUPERIOR	2	2	2	2		
27	90201–16M01	WASHER, PLATE ARANDELA PLANA	2	2	2	2		

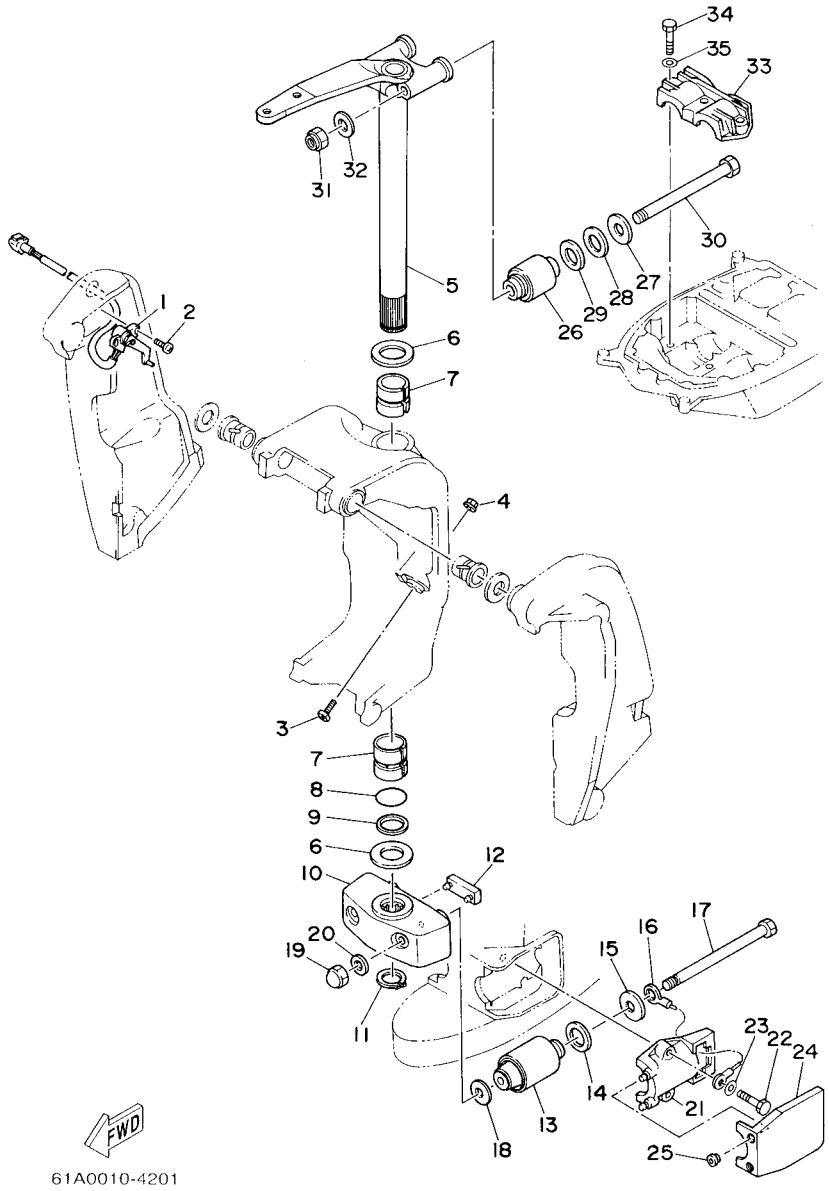

FIG. 21 BRACKET 2 SOPORTE 2

REF. NO.	PART NO. CODIGO Nº	DESCRIPTION DESCRIPCION	65J3	65L3	65K3	65M3		REMARKS OBSERVACIONES
28	90202–28M46	WASHER, PLATE ARANDELA DE PLANA	2	2	2	2		
29	90201–28M01	WASHER, PLATE ARANDELA PLANA	2	2	2	2		
30	90109–14M10	BOLT PERNO	2	2	2	2		
31	90185–14M00	NUT, SELF-LOCKING TUERCA AUTOBLOCANTE	2	2	2	2		
32	92995–14600	WASHER ARANDELA	2	2	2	2		
33	61A–44511–00–94	COVER, UPPER MOUNT CUBIERTA AMORTIGUADOR SUPERIOR	1	1	1	1		
34	97095–10045	BOLT PERNO	3	3	3	3		
35	92995–10600	WASHER ARANDELA	3	3	3	3		

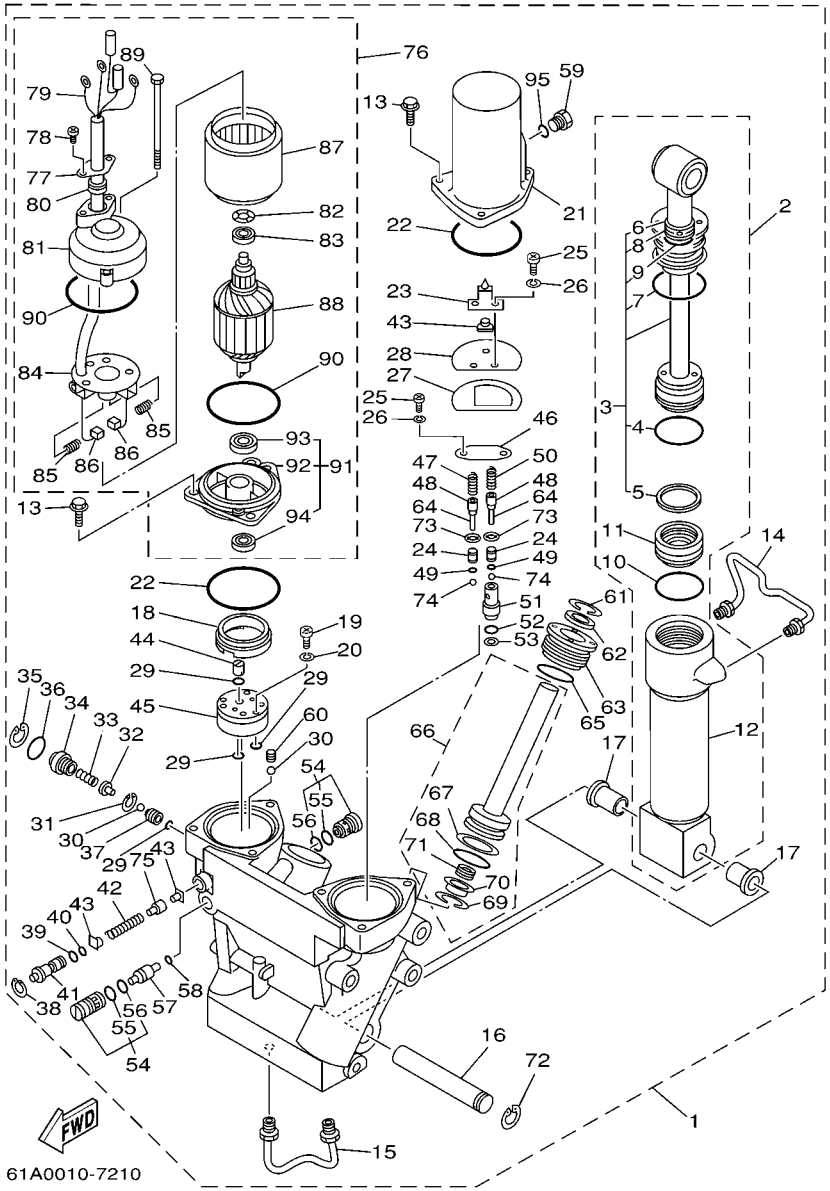

FIG. 22 POWER TRIM & TILT ASSY COMPONER Y PODER VARILLA

REF. NO.	PART NO. CODIGO Nº	DESCRIPTION DESCRIPCION	65J3	65L3	65K3	65M3		REMARKS OBSERVACIONES
1	61A–43800–25–4D	POWER TRIM & TILT ASSY ELEVADOR HIDRAULICO COMPL.	1	1	1	1		
2	61A–43840–01	.POWER TILT ASSY .CONJUNTO COMPONER	1	1	1	1		
3	61A–43810–00	..TILT PISTON SUB ASSY ..ELEVADOR SUB-PISTON COMPL.	1	1	1	1		
4	61A–43861–00	...O-RING ...ANILLO EN O 1	1	1	1	1		
5	61A–43871–00	...RING, BACK UP ...ANILLO	1	1	1	1		
6	93106–19N50	...OIL SEAL ...RETEN DE ACEITE	1	1	1	1		
7	6H1–43861–00	...O-RING ...ANILLO EN O 1	1	1	1	1		
8	6H1–43872–00	...RING, BACK UP ...ANILLO	1	1	1	1		
9	61A–4389H–00	...O-RING ...ANILLO EN O	1	1	1	1		
10	61A–43861–00	..O-RING ..ANILLO EN O 1	1	1	1	1		
11	6H1–43814–00	..PISTON, FREE ..PISTON LIBRE	1	1	1	1		
12	61A–43813–01	..CYLINDER, TILT ..CILINDRO INCLINACION	1	1	1	1		
13	97595–06420	.BOLT, WITH WASHER .PERNO CON ARANDELA RONDELLE	6	6	6	6		
14	61A–43835–01	.PIPE .TUBO 3	1	1	1	1		
15	61A–43833–01	.PIPE .TUBO 1	1	1	1	1		
16	61A–43818–00	.PIN, LOWER SHOCK MOUNT .PASADOR AMORTIGUADOR INFERIOR	1	1	1	1		
17	90386–18M14	.BUSH .BUJE	2	2	2	2		
18	6H1–43817–00	.FILTER 2 .FIELTRO 2	1	1	1	1		
19	98501–04030	.SCREW, PAN HEAD .TORNILLO DE CABEZA CRUZADA	3	3	3	3		
20	92901–04100	.WASHER, SPRING .ARANDELA PLANA	3	3	3	3		
21	61A–43828–00	.BODY, RESERVOIR .CUERPO DEPOSITO	1	1	1	1		
22	6H1–43869–00	.O-RING .ANILLO EN O 9	2	2	2	2		
23	61A–4384L–00	.SPRING, TRIM DOWN .RESORTE	1	1	1	1		
24	6T4–43851–00	.SEAT, RELIEF VALVE .ASIENTO VALVULA DE DESCARGA	2	2	2	2		
25	98501–05010	.SCREW, PAN HEAD .TORNILLO DE CABEZA CRUZADA	4	4	4	4		
26	92901–05100	.WASHER, SPRING .ARANDELA PLANA	4	4	4	4		
27	61A–4384K–00	.PLATE, TRIM DOWN .PLACA	1	1	1	1		

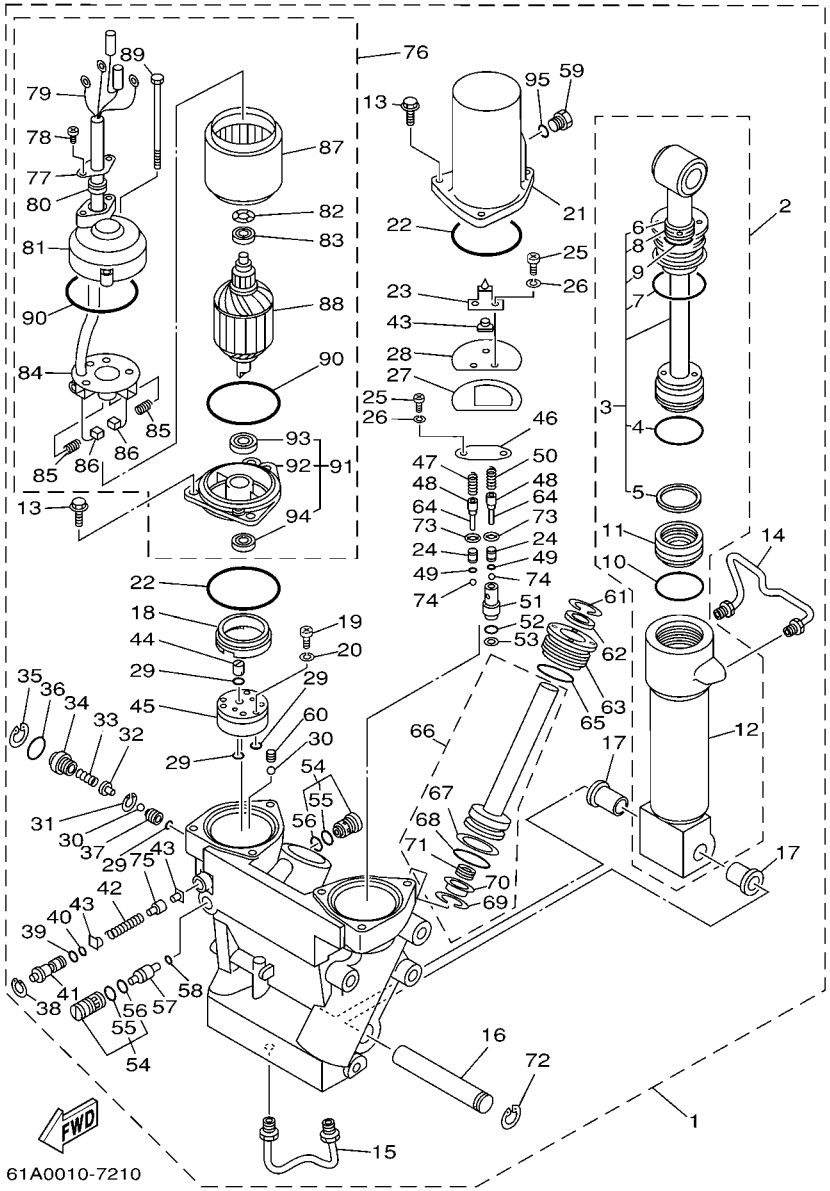

FIG. 22 POWER TRIM & TILT ASSY COMPONER Y PODER VARILLA

REF. NO.	PART NO. CODIGO Nº	DESCRIPTION DESCRIPCION	65J3	65L3	65K3	65M3		REMARKS OBSERVACIONES
28	61A–4384J–00	.SEAL, TRIM DOWN .SELLO	1	1	1	1		
29	93210–064A5	.O-RING .ANILLO O	4	4	4	4		
30	93505–32038	.BALL .BOLA	2	2	2	2		
31	61A–43875–00	.RING, SNAP .ANILLO	1	1	1	1		
32	61A–43848–00	.ROD, MANUAL RELEASE .VARILLA DESCOPLO MANUAL	1	1	1	1		
33	61A–43854–00	.SPRING, MANUAL RELEASE .RESORTE DESCOPLO MANUAL	1	1	1	1		
34	61A–43845–00	.SCREW, MANUAL RELEASE .TORNILLO DESCOPLO MANUAL	1	1	1	1		
35	6H1–43875–00	.RING, SNAP .ANILLO	1	1	1	1		
36	93210–18397	.O-RING .ANILLO O	1	1	1	1		
37	61A–43847–00	.SEAT, MANUAL VALVE .ASIENTO VALVULA MANUAL	1	1	1	1		
38	6T4–43876–00	.RING, SNAP .ANILLO	1	1	1	1		
39	93210–07003	.O-RING .ANILLO O	1	1	1	1		
40	93210–06001	.O-RING .ANILLO O	1	1	1	1		
41	6T4–43849–00	.PIN, VALVE SUPPORT .PASADOR VALVULA SOPORTE	1	1	1	1		
42	61A–4385H–00	.SPRING, SEAL .RESORTE	1	1	1	1		
43	6H1–4384F–00	.SEAL, MAIN VALVE .ASIENTO	3	3	3	3		
44	6H1–43831–00	.CONNECTOR, SHAFT .CONEXION EJE	1	1	1	1		
45	6T4–43830–00	.GEAR PUMP ASSY .ENGRANAJE BOMBA COMPL.	1	1	1	1		
46	61A–4382K–00	.CAP, RELIEF VALVE .CASQUILLO	1	1	1	1		
47	6H1–43856–10	.SPRING, DOWN RELIEF .RESORTE SEGURIDAD	1	1	1	1		
48	6T4–43844–00	.PIN, VALVE SUPPORT .PASADOR VALVULA SOPORTE	2	2	2	2		
49	6T4–4384G–00	.SEAL, RELIEF VALVE .ASIENTO	2	2	2	2		
50	6T4–43855–00	.SPRING, UP RELIEF .RESORTE SEGURIDAD SUPERIOR	1	1	1	1		
51	6T4–43895–00	.SEAT, RELIEF VALVE .ASIENTO	1	1	1	1		
52	93210–10M74	.O-RING .ANILLO O	1	1	1	1		
53	6H1–43816–00	.FILTER 1 .FIELTRO 1	1	1	1	1		
54	6T4–43802–03	.VALVE SUB ASSY .VALVULA PRINCIPAL COMPL.	2	2	2	2		

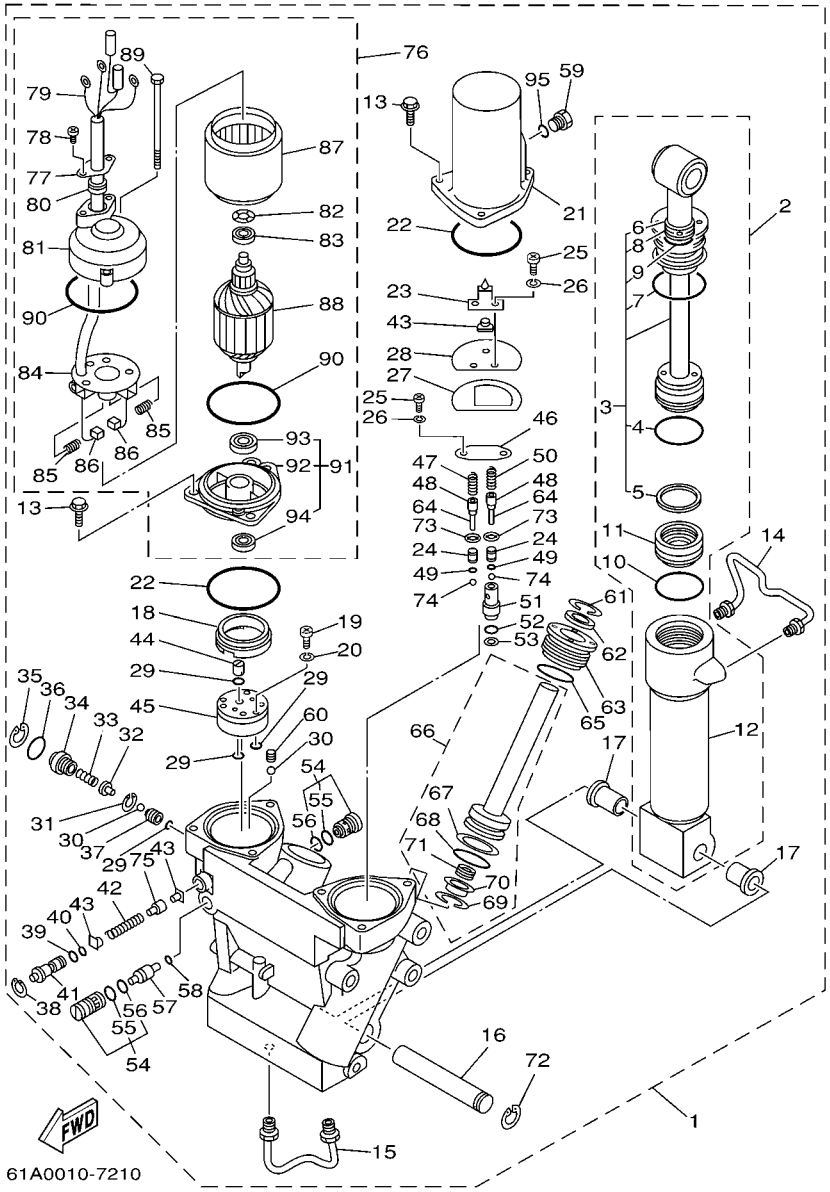

FIG. 22 POWER TRIM & TILT ASSY COMPONER Y PODER VARILLA

REF. NO.	PART NO. CODIGO Nº	DESCRIPTION DESCRIPCION	65J3	65L3	65K3	65M3		REMARKS OBSERVACIONES
55	6H1–43866–00	..O-RING ..ANILLO EN O 6	1	1	1	1		
56	6H1–43867–00	..O-RING ..ANILLO EN O 7	1	1	1	1		
57	6T4–43841–00	.PISTON, SHUTTLE .PISTON	1	1	1	1		
58	93210–09165	.O-RING .ANILLO O	1	1	1	1		
59	6H1–43829–00	.PLUG, RESERVOIR .TAPON DEPOSITO	1	1	1	1		
60	61A–43878–00	.BOLT, SOCKET .TORNILLO ENCASTRE	1	1	1	1		
61	6T4–43875–01	.RING, SNAP .ANILLO	2	2	2	2		
62	61A–43822–00	.SEAL, TRIM DUST .SELLO DE POLVO	2	2	2	2		
63	61A–43821–00	.SCREW, TRIM CYLINDER END .TORNILLO CILINDURO EXTREMO	2	2	2	2		
64	91609–10014	.PIN, SPRING .PASADOR DE RESORTE	2	2	2	2		
65	61A–43861–00	.O-RING .ANILLO EN O 1	2	2	2	2		
66	61A–43820–10	.TRIM PISTON SUB ASSY .ELEVADOR PISTON COMPL.	2	2	2	2		
67	61A–43874–00	..RING, BACK UP ..ANILLO	1	1	1	1		
68	61A–43864–00	..O-RING ..ANILLO EN O 4	1	1	1	1		
69	61A–43875–10	..RING, SNAP ..ANILLO	1	1	1	1		
70	61A–4383H–11	..HOSE, OIL 5 ..TUBO 5	1	1	1	1		
71	61A–4384H–10	..SPRING ..RESORTE	1	1	1	1		
72	61A–43876–00	.RING, SNAP .ANILLO	1	1	1	1		
73	6T4–43893–00	.WASHER .RONDANA	2	2	2	2		
74	93501–08001	.BALL .BOLA	2	2	2	2		
75	61A–4382A–00	.ADAPTOR 1 .ADAPTADOR 1	1	1	1	1		
76	61A–43880–02	.MOTOR ASSY .MOTOR COMPL.	1	1	1	1		
77	6T4–4386J–00	..WASHER, SPECIAL ..ARANDELA, ESPECIAL	1	1	1	1		
78	90157–05107	..SCREW, PAN HEAD ..TORNILLO CABEZA CONICA PLAN	2	2	2	2		
79	61A–43807–00	..WIRE SUB ASSY ..CABLE COMPL.	1	1	1	1		
80	6T4–43885–00	..GROMMET ..ARANDELA DE REFUERZO	1	1	1	1		
81	61A–43884–01	..FRAME, COMMUTATOR END ..CUADRO	1	1	1	1		

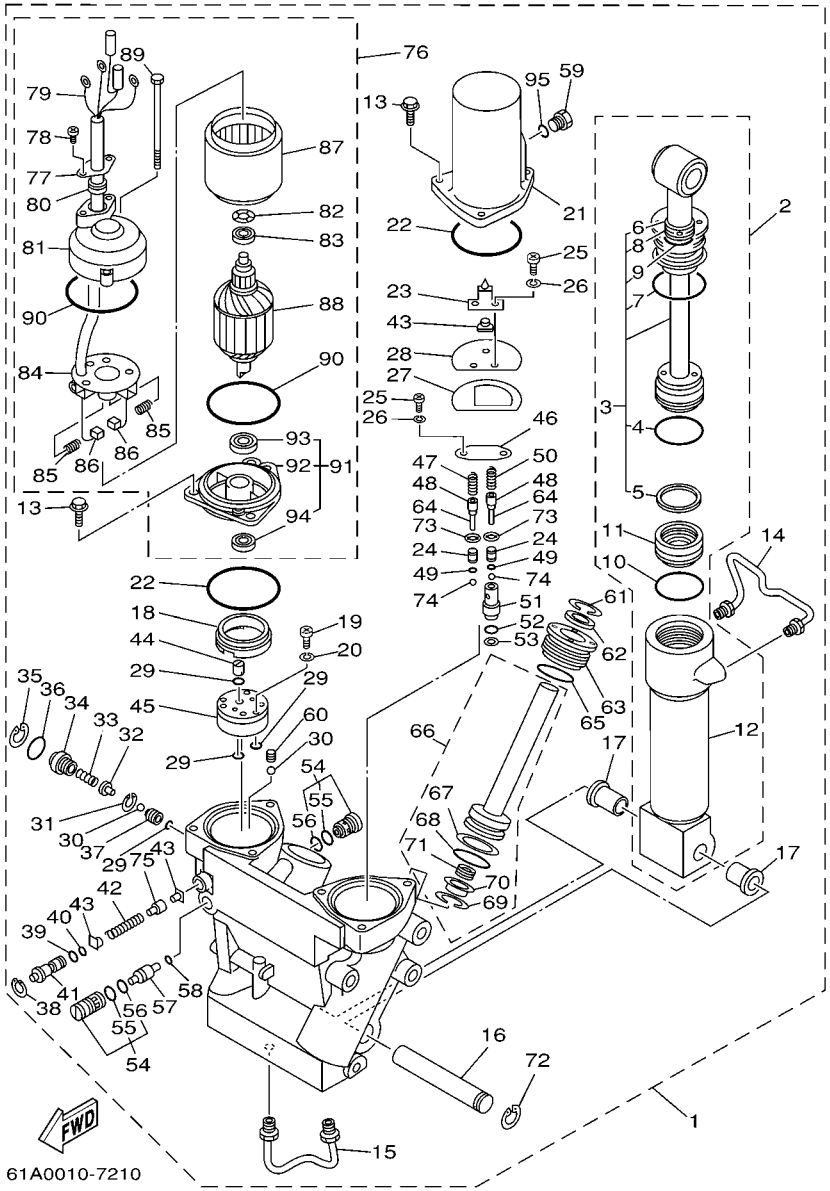

FIG. 22 POWER TRIM & TILT ASSY COMPONER Y PODER VARILLA

REF. NO.	PART NO. CODIGO Nº	DESCRIPTION DESCRIPCION	65J3	65L3	65K3	65M3		REMARKS OBSERVACIONES
82	90206–14086	..WASHER, WAVE ..ARANDELA ONDULADA	3	3	3	3		
83	93300–60820	..BEARING ..COJINETE	1	1	1	1		
84	61A–43806–00	..BRUSH HOLDER ASSY ..ESCOBILLA SOSTEN COMPL.	1	1	1	1		
85	61A–4386K–00	..SPRING, BRUSH ..RESORTE, ESCOBILLA	4	4	4	4		
86	61A–43891–00	..BRUSH 1 ..ESCOBILLA 1	2	2	2	2		
87	61A–43804–01	..STATOR ASSY ..ESTATOR COMPL	1	1	1	1		
88	61A–43805–01	..ARMATURE ASSY ..INDUCIDO COMPL.	1	1	1	1		
89	61A–43887–00	..BOLT, THROUGH ..TORNILLO	2	2	2	2		
90	93210–72789	..O-RING ..ANILLO O	2	2	2	2		
91	61A–43881–01	..FRAME, END ..CUADRO EXTERMO	1	1	1	1		
92	61A–43881–11	...FRAME, END ...CUADRO EXTERMO	1	1	1	1		
93	93300–60820	...BEARING ...COJINETE	1	1	1	1		
94	93102–08414	...OIL SEAL ...SELLO ACEITE	1	1	1	1		
95	93210–09165	.O-RING .ANILLO O	1	1	1	1		

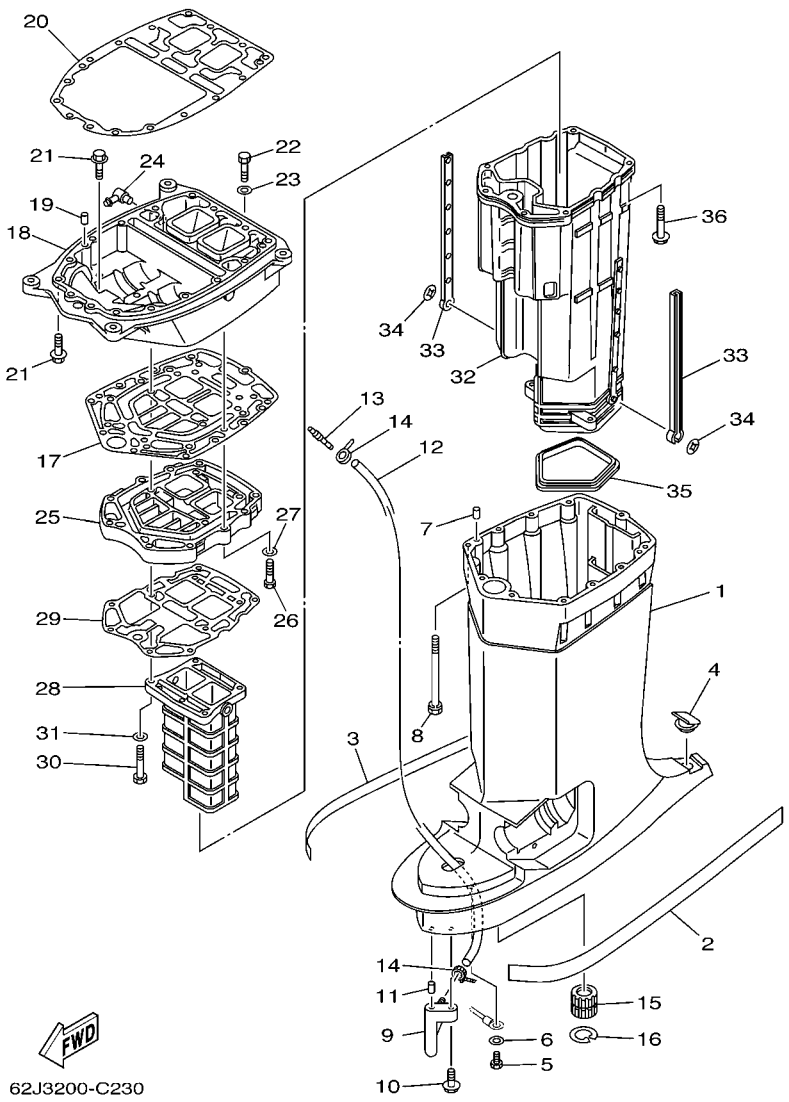

FIG. 23 UPPER CASING — FUNDA SUPERIOR

REF. NO.	PART NO. CODIGO Nº	DESCRIPTION DESCRIPCION	65J3	65L3	65K3	65M3		REMARKS OBSERVACIONES
1	61A–45111–22–8D	CASING, UPPER CAJA SUPERIOR	1	1	1	1		
2	61A–42791–S0	MARK 1 MARCA 1	1	1	1	1		
3	61A–42792–S0	MARK MARCA	1	1	1	1		
4	61A–45155–00	CAP TAPA	1	1	1	1		
5	97095–06010	BOLT PERNO	1	1	1	1		
6	92995–06600	WASHER ARANDELA	1	1	1	1		
7	93608–12M05	PIN, DOWEL PASADOR DE CLAVIJA	2	2	2	2		
8	90119–08M78	BOLT, WITH WASHER TORNILLO CON ARANDELA	8	8	8	8		
9	61A–45378–00	NIPPLE, HOSE NIPLE MANGUERA	1	1	1	1		
10	90119–06M17	BOLT, WITH WASHER TORNILLO CON ARANDELA	1	1	1	1		
11	93606–12019	PIN, DOWEL PASADOR DE CLAVIJA	1	1	1	1		
12	90445–07MF0	HOSE (L1030) TUBO (L1030)	1	1	1	1		
13	6E5–83558–00	END, NIPPLE EXTREMO DE NIPLE	1	1	1	1		
14	90465–11M10	CLAMP BRIDA	2	2	2	2		
15	6E5–45318–00	BUSHING, DRIVE SHAFT BUJE, EJE DE MANDO	1	1	1	1		
16	93420–36M01	CIRCLIP SEGURO	1	1	1	1		
17	61A–45114–A0	GASKET, UPPER CASING EMPAQUE	1	1	1	1		
18	61A–41137–14–94	GUIDE, EXHAUST GUIA DE ESCAPE	1	1	1	1		FLUSHING KIT FLUSHING KIT
19	93608–12M05	PIN, DOWEL PASADOR DE CLAVIJA	2	2	2	2		
20	61A–45113–A0	GASKET, UPPER CASING EMPAQUE	1	1	1	1		
21	90119–08M79	BOLT, WITH WASHER TORNILLO CON ARANDELA	8	8	8	8		
22	97095–08035	BOLT PERNO	1	1	1	1		
23	92995–08600	WASHER ARANDELA	1	1	1	1		
24	6H1–11372–00	NIPPLE, HOSE NIPLE DE MANGUERA	1	1	1	1		FLUSHING KIT FLUSHING KIT
25	61A–41131–01–5B	MANIFOLD, EXT. 1 TUBO MULTIPLE DE ESCAPE	1	1	1	1		
26	97095–08035	BOLT PERNO	4	4	4	4		
27	92995–08600	WASHER ARANDELA	4	4	4	4		

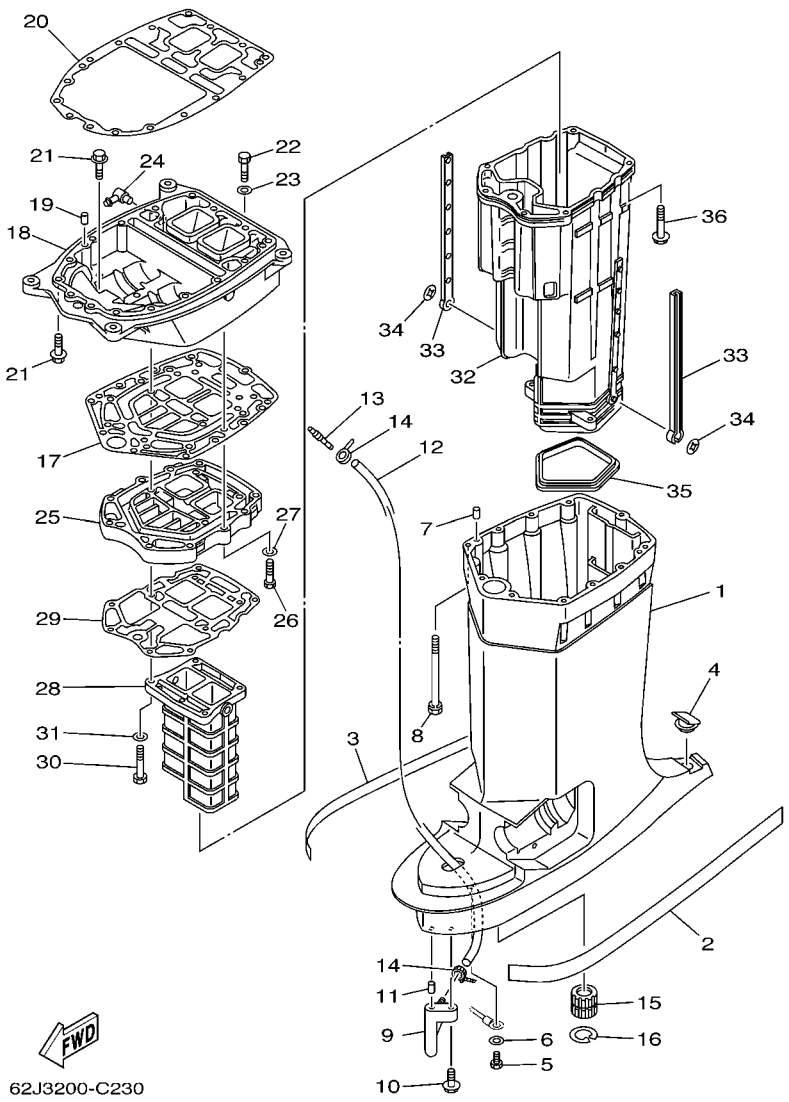

FIG. 23 UPPER CASING — FUNDA SUPERIOR

REF. NO.	PART NO. CODIGO Nº	DESCRIPTION DESCRIPCION	65J3	65L3	65K3	65M3		REMARKS OBSERVACIONES
28	61A–41132–01–5B	MANIFOLD, EXHAUST TUBO MULTIPLE DE ESCAPE	1	1	1	1		
29	61A–41134–A0	GASKET, EXHAUST MANIFOLD EMPAQUE	1	1	1	1		
30	97095–08050	BOLT PERNO	4	4	4	4		
31	92995–08600	WASHER ARANDELA	4	4	4	4		
32	61A–14711–22–5B	MUFFLER 1 SILENCIADOR 1	1	1	1	1		
33	6E5–14737–00	DAMPER, MUFFLER AMORTIGUADOR DE SILENCIADOR	2	2	2	2		
34	90183–05M02	NUT, SPRING TUERCA DE RESORTE	2	2	2	2		
35	61A–45123–01	GASKET, MUFFLER EMPAQUE SILENCIADOR	1	1	1	1		
36	90119–08M74	BOLT, WITH WASHER TORNILLO CON ARANDELA	6	6	6	6		

FIG. 24 LOWER CASING & DRIVE 1 IMPULSOR E INFERIOR 1

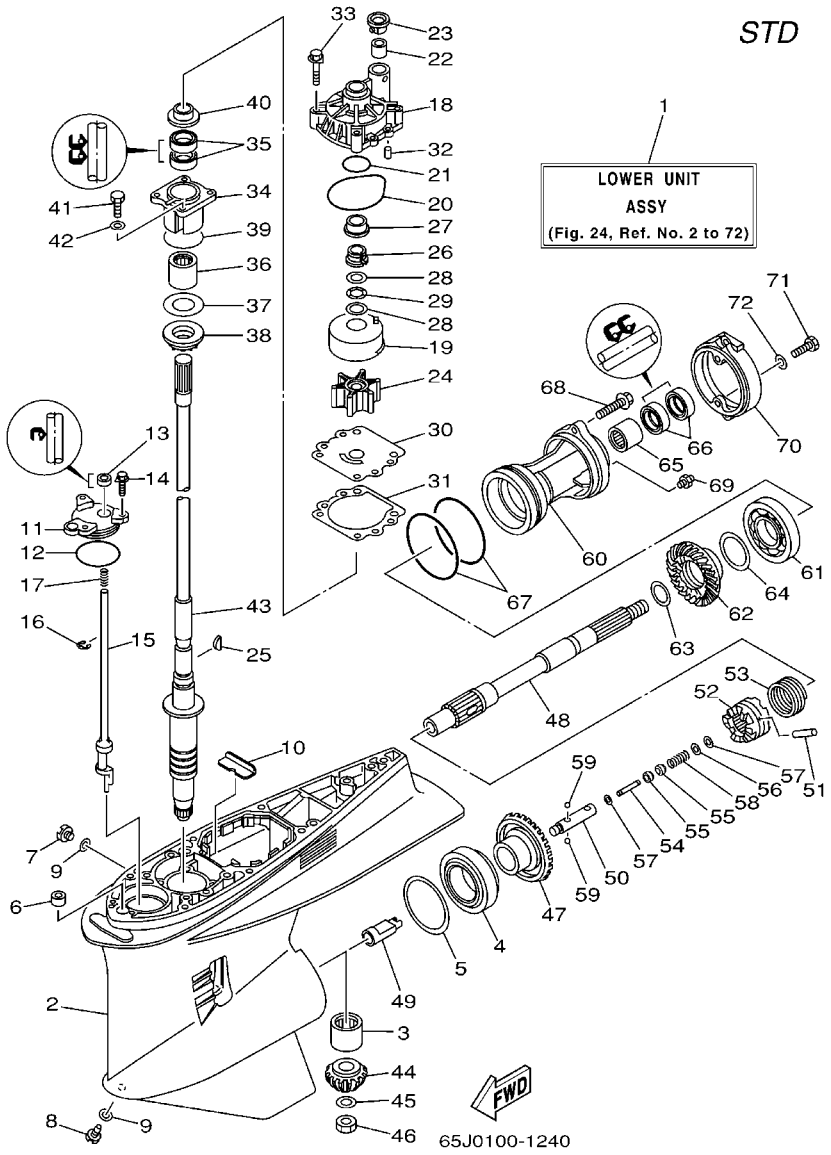

REF. NO.	PART NO. CODIGO Nº	DESCRIPTION DESCRIPCION	65J3	65L3	65K3	65M3		REMARKS OBSERVACIONES
1	65J–45300–21–8D	LOWER UNIT ASSY CONJUNTO UNIDAD INFERIOR	1	1				
2	61A–45301–10–8D	CASING, LOWER FUNDA INFERIOR COMPLETA	1	1				
3	93311–83280	BEARING COJINETE DE RODILLOS	1	1				
4	93332–000W1	BEARING COJINETE	1	1				
5	61A–45567–00–10	SHIM (T:0.10MM) LAINA(T:0.10MM)	1	1				UR UR
	61A–45567–00–12	SHIM (T:0.12MM) LAINA (T:0.12MM)	1	1				UR UR
	61A–45567–00–15	SHIM (T:0.15MM) LAINA (T:0.15MM)	1	1				UR UR
	61A–45567–00–18	SHIM (T:0.18MM) LAINA (T:0.18MM)	1	1				UR UR
	61A–45567–00–30	SHIM (T:0.30MM) LAINA (T:0.30MM)	1	1				UR UR
	61A–45567–00–40	SHIM (T:0.40MM) LAINA (T:0.40MM)	1	1				UR UR
	61A–45567–00–50	SHIM (T:0.50MM) LAINA (T:0.50MM)	1	1				UR UR
6	663–44366–00	DAMPER, WATER SEAL GOMA DEL SELLO DE AGUA	1	1				
7	90340–08002	PLUG, STRAIGHT SCREW TORNILLO, DE DRENAJE	1	1				
8	688–45341–10	PLUG, DRAIN TAPON, DREN	1	1				
9	90430–08020	GASKET JUNTA	2	2				
10	61A–45376–00–94	GUIDE, SEAL DAMPER GUIA DE SELLO GOMA	1	1				
11	61A–45321–01	PLATE PLACA	1	1				
12	93210–64488	O-RING ANILLO O	1	1				
13	93106–09014	OIL SEAL RETEN DE ACEITE	1	1				
14	90119–06M10	BOLT, WITH WASHER TORNILLO CON ARANDELA	3	3				
15	60V–44150–00	SHIFT CAM ASSY CONJUNTO EJE LEVA COMPL.	1	1				
16	99001–08600	CIRCLIP PRESILLA REDONDA	1	1				
17	90501–11M10	SPRING, COMPRESSION RESORTE DE COMPRESION	1	1				
18	61A–44311–01	HOUSING, WATER PUMP CAJA BOMBA DE AGUA	1	1				
19	61A–44322–02	INSERT, CARTRIDGE CARTUCHO	1	1				
20	93210–86M38	O-RING ANILLO O	1	1				
21	93210–37160	O-RING ANILLO O	1	1				

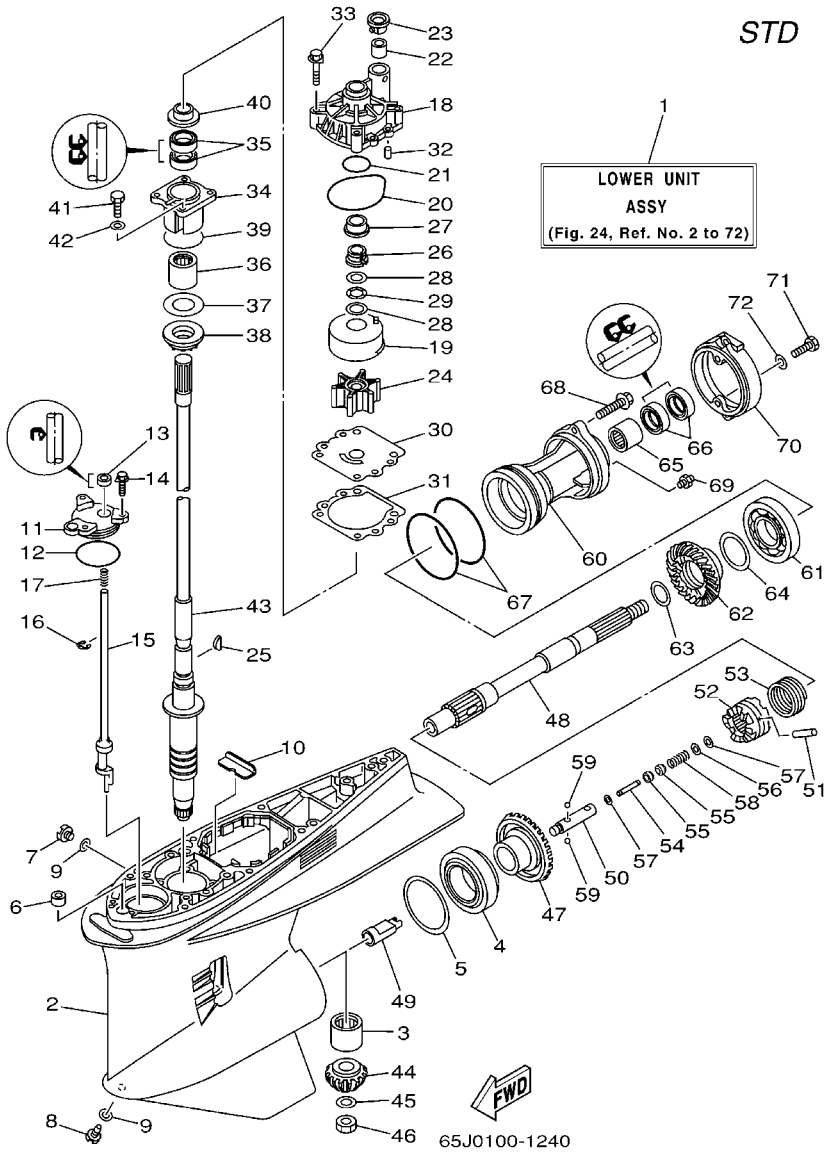

FIG. 24 LOWER CASING & DRIVE 1 IMPULSOR E INFERIOR 1

REF. NO.	PART NO. CODIGO Nº	DESCRIPTION DESCRIPCION	65J3	65L3	65K3	65M3		REMARKS OBSERVACIONES
22	6E5–44365–00	DAMPER, WATER SEAL HULE DE SELLO DE AGUA	1	1				
23	6E5–44312–00	COVER, WATER PUMP HOUSING CUBIERTA CAJA BOMBA DE AGUA	1	1				
24	6E5–44352–01	IMPELLER IMPULSOR	1	1				
25	90280–04M05	KEY, WOODRUFF CUNA WOODRUFF	1	1				
26	61A–45538–00	SPACER 1 ESPACIADOR 1	1	1				
27	61A–45527–00	COLLAR, DRIVE SHAFT COLLAR EJE FLECHA DE PROPULSIO	1	1				
28	90201–22M01	WASHER, PLATE ARANDELA PLANA	2	2				
29	90206–22M19	WASHER, WAVE ARANDELA ONDULADA	1	1				
30	6G5–44323–00	OUTER PLATE, CARTRIDGE PLACA EXTERIOR DEL CARTUCHO	1	1				
31	6E5–44315–A0	GASKET, WATER PUMP EMPAQUE	1	1				
32	93606–12019	PIN, DOWEL PASADOR DE CLAVIJA	2	2				
33	90119–08M14	BOLT, WITH WASHER TORNILLO CON ARANDELA	4	4				
34	61A–45331–00–94	HOUSING, BEARING CAJA DE COJINETE	1	1				
35	93101–28M16	OIL SEAL SELLO ACEITE	2	2				
36	93317–330U2	BEARING COJINETE	1	1				
37	61A–45587–00–10	SHIM (T:0.10MM) LAINA (T:0.10MM)	1	1				UR UR
	61A–45587–00–12	SHIM (T:0.12MM) LAINA (T:0.12MM)	1	1				UR UR
	61A–45587–00–15	SHIM (T:0.15MM) LAINA (T:0.15MM)	1	1				UR UR
	61A–45587–00–18	SHIM (T:0.18MM) LAINA (T:0.18MM)	1	1				UR UR
	61A–45587–00–30	SHIM (T:0.30MM) LAINA (T:0.30MM)	1	1				UR UR
	61A–45587–00–40	SHIM (T:0.40MM) LAINA (T:0.40MM)	1	1				UR UR
	61A–45587–00–50	SHIM (T:0.50MM) LAINA (T:0.50MM)	1	1				UR UR
38	93341–930U9	BEARING COJINETES CON RODAMIENTOS	1	1				
39	93210–55M14	O-RING ANILLO O	1	1				
40	6E5–45344–00	COVER, OIL SEAL CUBIERTA SELLO ACEITE	1	1				
41	97095–08025	BOLT PERNO	4	4				
42	92995–08600	WASHER ARANDELA	4	4				

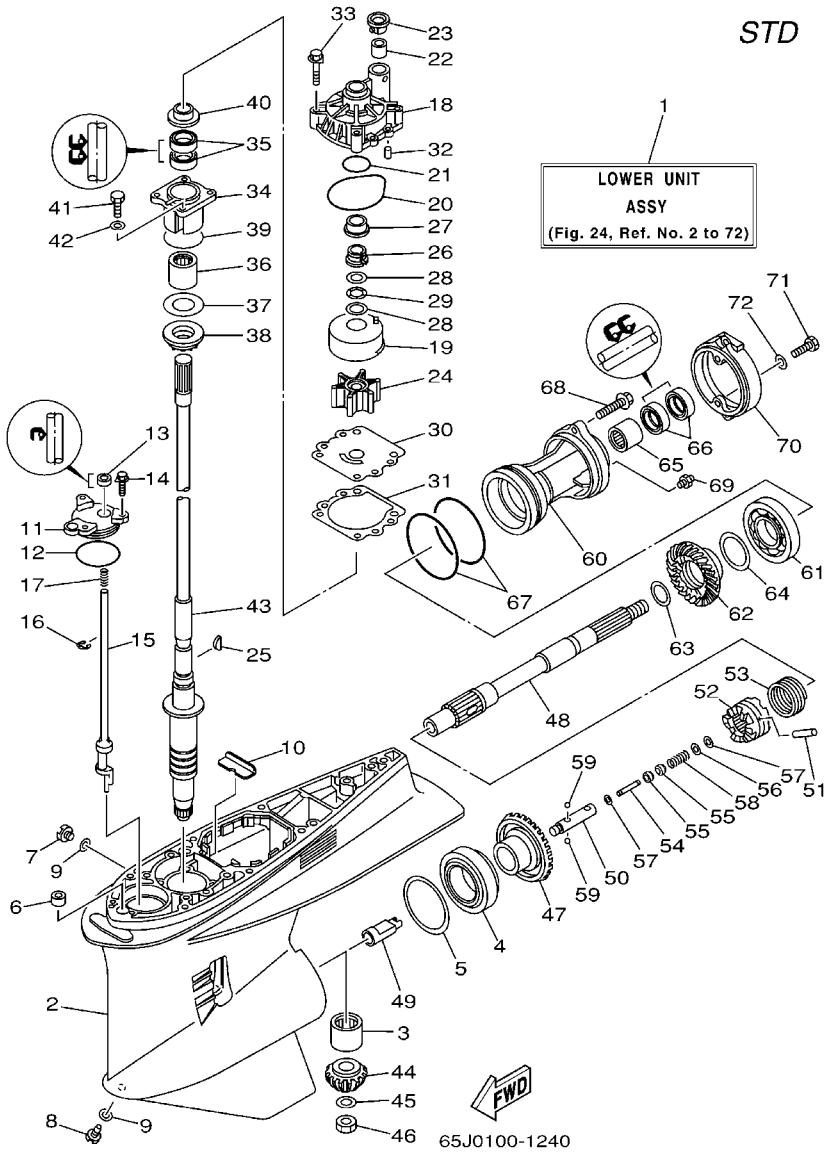

FIG. 24 LOWER CASING & DRIVE 1 IMPULSOR E INFERIOR 1

REF. NO.	PART NO. CODIGO Nº	DESCRIPTION DESCRIPCION	65J3	65L3	65K3	65M3		REMARKS OBSERVACIONES
43	61A–45501–20	DRIVE SHAFT COMP. EJE DE MANDO COMPL.	1	1				
44	61A–45551–03	PINION PINON	1	1				
45	90201–16M00	WASHER, PLATE ARANDELA PLANA	1	1				
46	90170–16M19	NUT TUERCA	1	1				
47	61A–45560–03	GEAR ENGRANE COMPLE 1	1	1				
48	69J–45611–00	SHAFT, PROPELLER EJE PROPUSOR	1	1				
49	61A–45641–02	SHIFTER CAMBIO	1	1				
50	61A–45634–01	SLIDE, SHIFT DESLIZADOR, CAMBIO	1	1				
51	61A–45632–00	PIN, CROSS PASADOR TRANSVERSAL	1	1				
52	61A–45631–03	CLUTCH, DOG EMBRAGUE DE GARRA	1	1				
53	61A–45633–00	RING, CROSS PIN ANILLO DE PASADOR	1	1				
54	6H1–45668–00	SHAFT, FREE EJE	1	1				
55	61A–45635–00	PLUNGER, SHIFT EMBOLO DE CAMBIO	2	2				
56	90201–02M00	WASHER, PLATE ARANDELA PLANA	1	1				
57	90183–02M03	NUT, SPRING TUERCA DE RESORTE	2	2				
58	90501–10M77	SPRING, COMPRESSION RESORTE DE COMPRESION	1	1				
59	93501–04011	BALL BOLA	2	2				
60	61A–45332–02–94	HOUSING, BEARING CAJA BALERO 2	1	1				
61	93306–210U0	BEARING COJINETE	1	1				
62	61A–45571–00	GEAR ENGRANAJE	1	1				
63	90201–31M00	WASHER, PLATE ARANDELA PLANA	1	1				
64	61A–45577–00–10	SHIM (T:0.10MM) LAINA (T:0.10MM)	1	1				UR UR
	61A–45577–00–12	SHIM (T:0.12MM) LAINA (:0.12MM)	1	1				UR UR
	61A–45577–00–15	SHIM (T:0.15MM) LAINA (T:0.15MM)	1	1				UR UR
	61A–45577–00–18	SHIM (T:0.18MM) LAINA (T:0.18MM)	1	1				UR UR
	61A–45577–00–30	SHIM (T:0.30MM) LAINA (T:0.30MM)	1	1				UR UR
	61A–45577–00–40	SHIM (T:0.40MM) LAINA (T:0.40MM)	1	1				UR UR

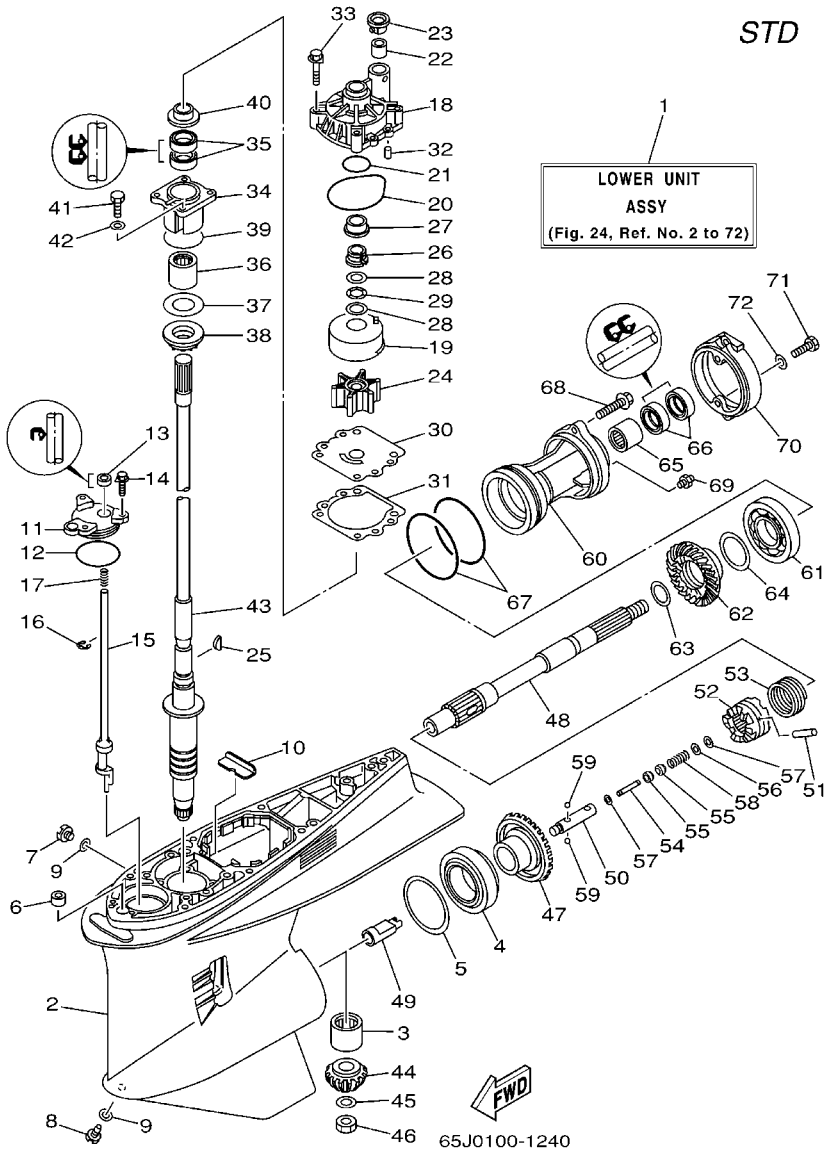

FIG. 24 LOWER CASING & DRIVE 1 IMPULSOR E INFERIOR 1

REF. NO.	PART NO. CODIGO Nº	DESCRIPTION DESCRIPCION	65J3	65L3	65K3	65M3		REMARKS OBSERVACIONES
64	61A–45577–00–50	SHIM (T:0.50MM) LAINA (T:0.50MM)	1	1				UR UR
65	93317–330U5	BEARING COJINETE	1	1				
66	93101–30M17	OIL SEAL SELLO ACEITE	2	2				
67	93211–04384	O-RING ANILLO O	2	2				
68	90105–08M48	BOLT, FLANGE TORNILLO	2	2				
69	93700–09M00	NIPPLE, GREASE BOQUILLA DE ENGRASAR	1	1				
70	61A–45361–01–5B	CAP, LOWER CASING FUNDA INFERIOR	1	1				
71	97095–08020	BOLT PERNO	2	2				
72	92995–08600	WASHER ARANDELA	2	2				

FIG. 25 LOWER CASING & DRIVE 2 IMPULSOR E INFERIOR 2

STD

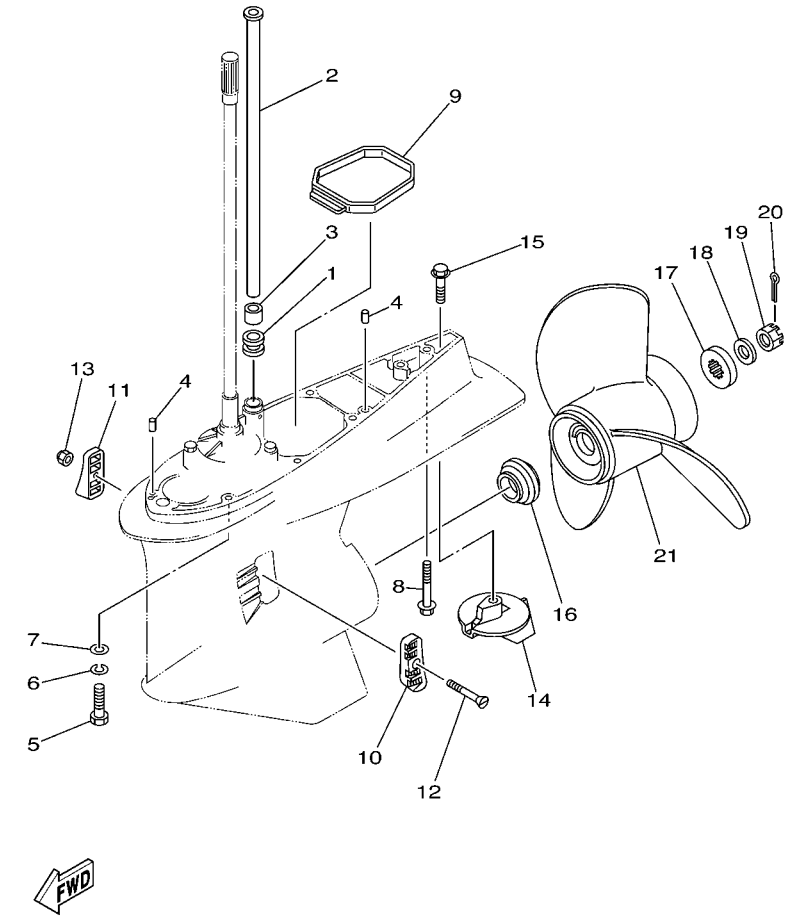

65J2100-3260

REF. NO.	PART NO. CODIGO Nº	DESCRIPTION DESCRIPCION	65J3	65L3	65K3	65M3		REMARKS OBSERVACIONES
1	6E5–44366–00	DAMPER, WATER SEAL GOMA DEL SELLO DE AGUA	1	1				
2	61A–44361–20	TUBE, WATER TUBO DE AGUA	1	1				
3	6E5–44365–00	DAMPER, WATER SEAL HULE DE SELLO DE AGUA	1	1				
4	93608–12M05	PIN, DOWEL PASADOR DE CLAVIJA	2	2				
5	97095–10045	BOLT PERNO	7	7				
6	92995–10100	WASHER ARANDELA	7	7				
7	92995–10600	WASHER ARANDELA	7	7				
8	90119–10MA2	BOLT, WITH WASHER TORNILLO CON ARANDELA	1	1				
9	61A–45375–00	DAMPER, SEAL GOMA DE SELLO	1	1				
10	61A–45214–10	COVER, WATER INLET CUBIERTA ENTRADA AGUA	1	1				
11	61A–45215–10	COVER, WATER INLET CUBIERTA ENTRADA AGUA	1	1				
12	90152–05003	SCREW, COUNTERSUNK TORNILLO EMBUTIDO	1	1				
13	90185–05002	NUT, SELF-LOCKING TUERCA AUTOBLOCANTE	1	1				
14	61A–45371–00	TAB-TRIM QUILLA ESTABILIZADOR	1	1				
15	90105–10M00	BOLT, FLANGE TORNILLO	1	1				
16	6E5–45987–01	SPACER ESPACIADOR	1	1				
17	688–45997–01	SPACER ESPACIADOR	1	1				
18	92990–18200	WASHER ARANDELA PLANA	1	1				
19	90171–18M04	NUT, CASTLE TUERCA ENTALLADA	1	1				
20	91490–40030	PIN, COTTER CHAVETA	1	1				
21	6G5–45970–02–98	PROPELLER (3X15-1/4"X15"-M) PROPELA (3X15-1/4"X15"-M)	1	1				UR UR
	6G5–45972–02–98	PROPELLER (3X13-3/4"X21"-M) PROPELA (3X13-3/4"X21"-M)	1	1				UR UR
	6G5–45974–03–98	PROPELLER (3X13-3/4"X19"-M2) PROPELA (3X13-3/4"X19"-M2)	1	1				UR UR
	6G5–45978–03–98	PROPELLER (3X13-3/4"X17"-M2) PROPELA (3X13-3/4"X17"-M2)	1	1				UR UR
	61A–45972–00–98	PROPELLER (3X14-1/2"X21"-T) PROPELA (3X14-1/2"X21"-T)	1	1				UR UR
	61A–45974–00–98	PROPELLER (3X14-1/2"X19"-T) PROPELA (3X14-1/2"X19"-T)	1	1				UR UR
	61A–45978–00–98	PROPELLER (3X15"X17"-T) PROPELA (3X15"X17"-T)	1	1				UR UR

FIG. 25 LOWER CASING & DRIVE 2 IMPULSOR E INFERIOR 2

STD

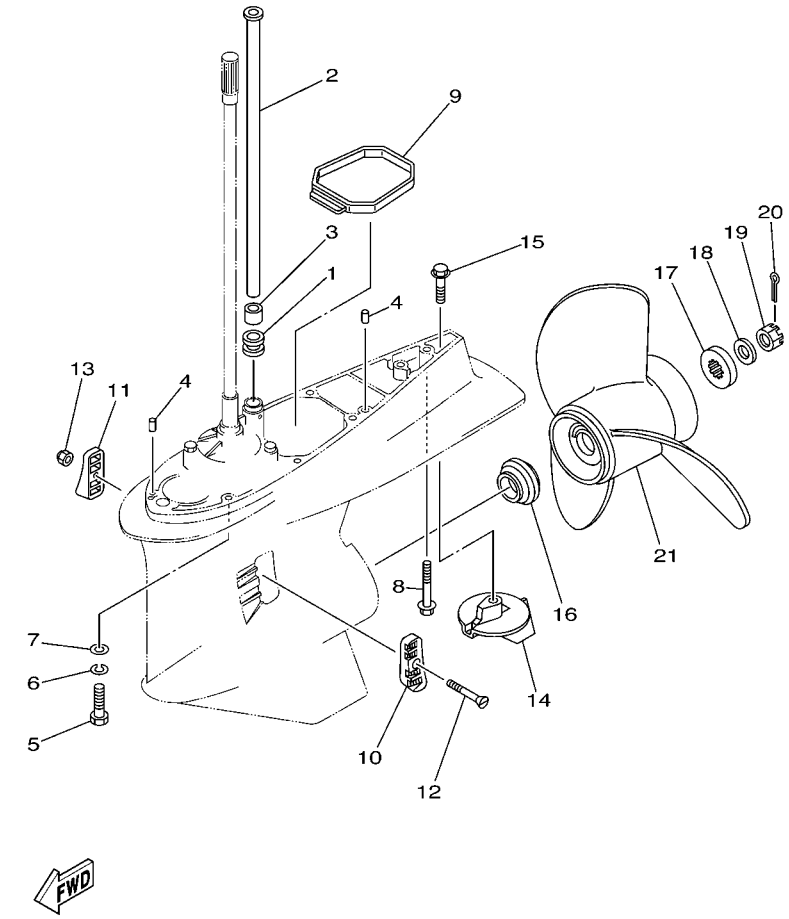

REF. NO.	PART NO. CODIGO Nº	DESCRIPTION DESCRIPCION	65J3	65L3	65K3	65M3		REMARKS OBSERVACIONES
21	66K–45974–B0	PROPELLER (3X14-1/2"X23"-M2) PROPELA (3X14-1/2"X23"-M2)	1	1				UR UR

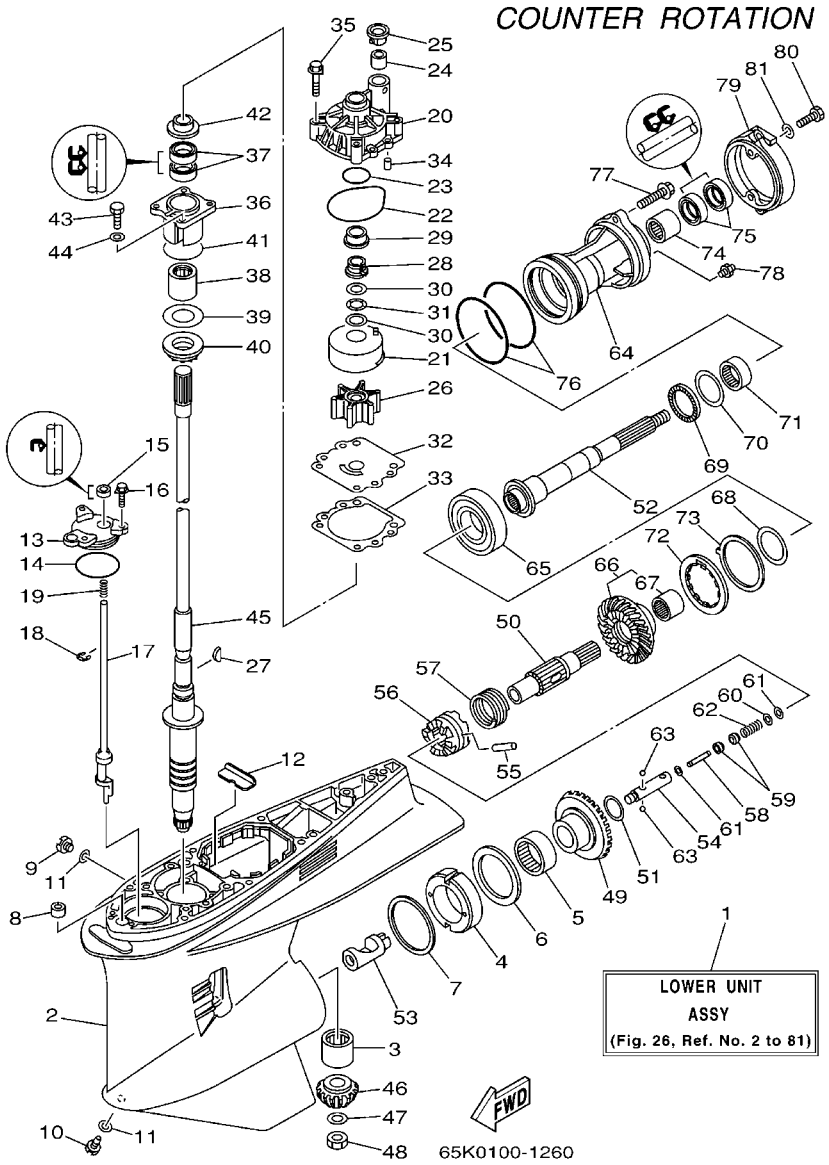

FIG. 26 LOWER CASING & DRIVE 3 IMPULSOR E INFERIOR 3

REF. NO.	PART NO. CODIGO Nº	DESCRIPTION DESCRIPCION	65J3	65L3	65K3	65M3		REMARKS OBSERVACIONES
1	65K–45300–21–8D	LOWER UNIT ASSY CONJUNTO UNIDAD INFERIOR			1	1		
2	61A–45301–10–8D	CASING, LOWER FUNDA INFERIOR COMPLETA			1	1		
3	93311–83280	BEARING COJINETE DE RODILLOS			1	1		
4	61B–45538–01	SPACER 1 ESPACIADOR 1			1	1		
5	93315–660W3	BEARING COJINETE DE RODILLOS			1	1		
6	93341–670V0	BEARING COJINETES CON RODAMIENTOS			1	1		
7	61A–45567–00–10	SHIM (T:0.10MM) LAINA(T:0.10MM)			1	1		UR UR
	61A–45567–00–12	SHIM (T:0.12MM) LAINA (T:0.12MM)			1	1		UR UR
	61A–45567–00–15	SHIM (T:0.15MM) LAINA (T:0.15MM)			1	1		UR UR
	61A–45567–00–18	SHIM (T:0.18MM) LAINA (T:0.18MM)			1	1		UR UR
	61A–45567–00–30	SHIM (T:0.30MM) LAINA (T:0.30MM)			1	1		UR UR
	61A–45567–00–40	SHIM (T:0.40MM) LAINA (T:0.40MM)			1	1		UR UR
	61A–45567–00–50	SHIM (T:0.50MM) LAINA (T:0.50MM)			1	1		UR UR
8	663–44366–00	DAMPER, WATER SEAL GOMA DEL SELLO DE AGUA			1	1		
9	90340–08002	PLUG, STRAIGHT SCREW TORNILLO, DE DRENAJE			1	1		
10	688–45341–10	PLUG, DRAIN TAPON, DREN			1	1		
11	90430–08020	GASKET JUNTA			2	2		
12	61A–45376–00–94	GUIDE, SEAL DAMPER GUIA DE SELLO GOMA			1	1		
13	61A–45321–01	PLATE PLACA			1	1		
14	93210–64488	O-RING ANILLO O			1	1		
15	93106–09014	OIL SEAL RETEN DE ACEITE			1	1		
16	90119–06M10	BOLT, WITH WASHER TORNILLO CON ARANDELA			3	3		
17	60W–44150–00	SHIFT CAM ASSY CONJUNTO EJE LEVA COMPL.			1	1		
18	99001–08600	CIRCLIP PRESILLA REDONDA			1	1		
19	90501–11M10	SPRING, COMPRESSION RESORTE DE COMPRESION			1	1		
20	61A–44311–01	HOUSING, WATER PUMP CAJA BOMBA DE AGUA			1	1		
21	61A–44322–02	INSERT, CARTRIDGE CARTUCHO			1	1		

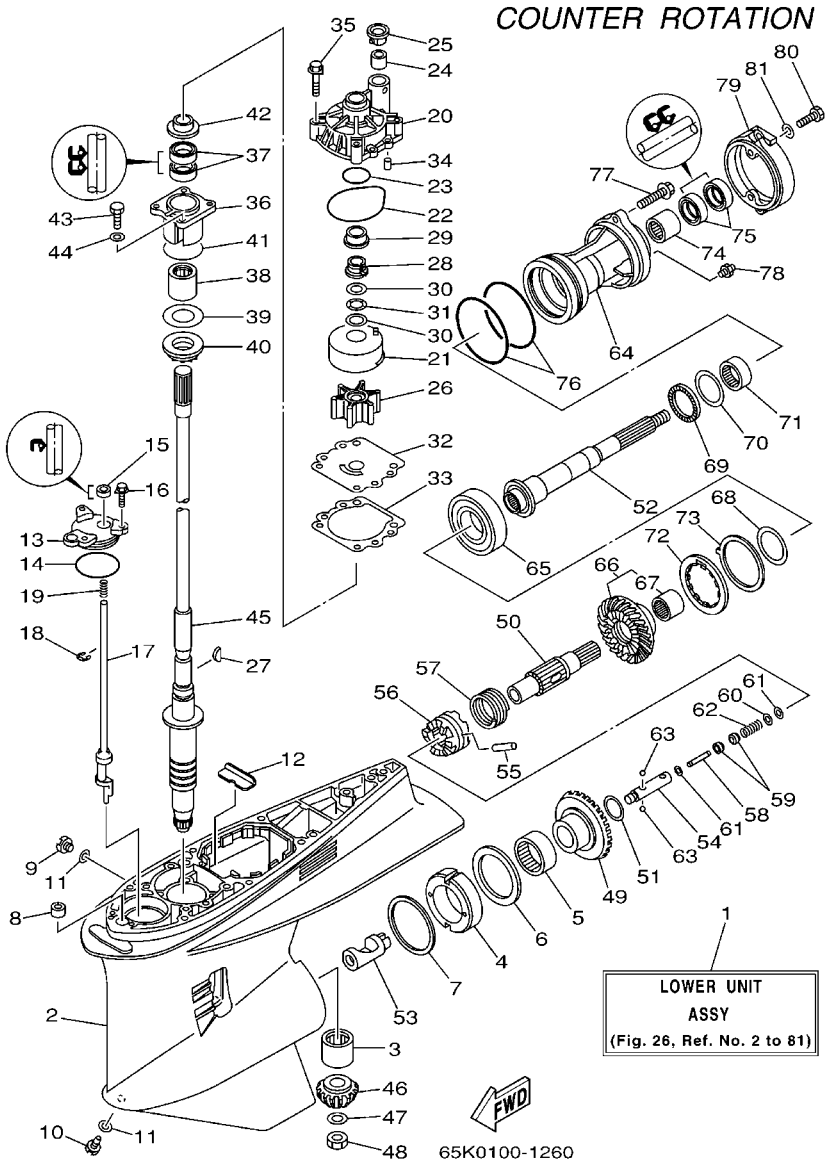

FIG. 26 LOWER CASING & DRIVE 3 IMPULSOR E INFERIOR 3

REF. NO.	PART NO. CODIGO Nº	DESCRIPTION DESCRIPCION	65J3	65L3	65K3	65M3		REMARKS OBSERVACIONES
22	93210–86M38	O-RING ANILLO O			1	1		
23	93210–37160	O-RING ANILLO O			1	1		
24	6E5–44365–00	DAMPER, WATER SEAL HULE DE SELLO DE AGUA			1	1		
25	6E5–44312–00	COVER, WATER PUMP HOUSING CUBIERTA CAJA BOMBA DE AGUA			1	1		
26	6E5–44352–01	IMPELLER IMPULSOR			1	1		
27	90280–04M05	KEY, WOODRUFF CUNA WOODRUFF			1	1		
28	61A–45538–00	SPACER 1 ESPACIADOR 1			1	1		
29	61A–45527–00	COLLAR, DRIVE SHAFT COLLAR EJE FLECHA DE PROPULSIO			1	1		
30	90201–22M01	WASHER, PLATE ARANDELA PLANA			2	2		
31	90206–22M19	WASHER, WAVE ARANDELA ONDULADA			1	1		
32	6G5–44323–00	OUTER PLATE, CARTRIDGE PLACA EXTERIOR DEL CARTUCHO			1	1		
33	6E5–44315–A0	GASKET, WATER PUMP EMPAQUE			1	1		
34	93606–12019	PIN, DOWEL PASADOR DE CLAVIJA			2	2		
35	90119–08M14	BOLT, WITH WASHER TORNILLO CON ARANDELA			4	4		
36	61A–45331–00–94	HOUSING, BEARING CAJA DE COJINETE			1	1		
37	93101–28M16	OIL SEAL SELLO ACEITE			2	2		
38	93317–330U2	BEARING COJINETE			1	1		
39	61A–45587–00–10	SHIM (T:0.10MM) LAINA (T:0.10MM)			1	1		UR UR
	61A–45587–00–12	SHIM (T:0.12MM) LAINA (T:0.12MM)			1	1		UR UR
	61A–45587–00–15	SHIM (T:0.15MM) LAINA (T:0.15MM)			1	1		UR UR
	61A–45587–00–18	SHIM (T:0.18MM) LAINA (T:0.18MM)			1	1		UR UR
	61A–45587–00–30	SHIM (T:0.30MM) LAINA (T:0.30MM)			1	1		UR UR
	61A–45587–00–40	SHIM (T:0.40MM) LAINA (T:0.40MM)			1	1		UR UR
	61A–45587–00–50	SHIM (T:0.50MM) LAINA (T:0.50MM)			1	1		UR UR
40	93341–930U9	BEARING COJINETES CON RODAMIENTOS			1	1		
41	93210–55M14	O-RING ANILLO O			1	1		
42	6E5–45344–00	COVER, OIL SEAL CUBIERTA SELLO ACEITE			1	1		

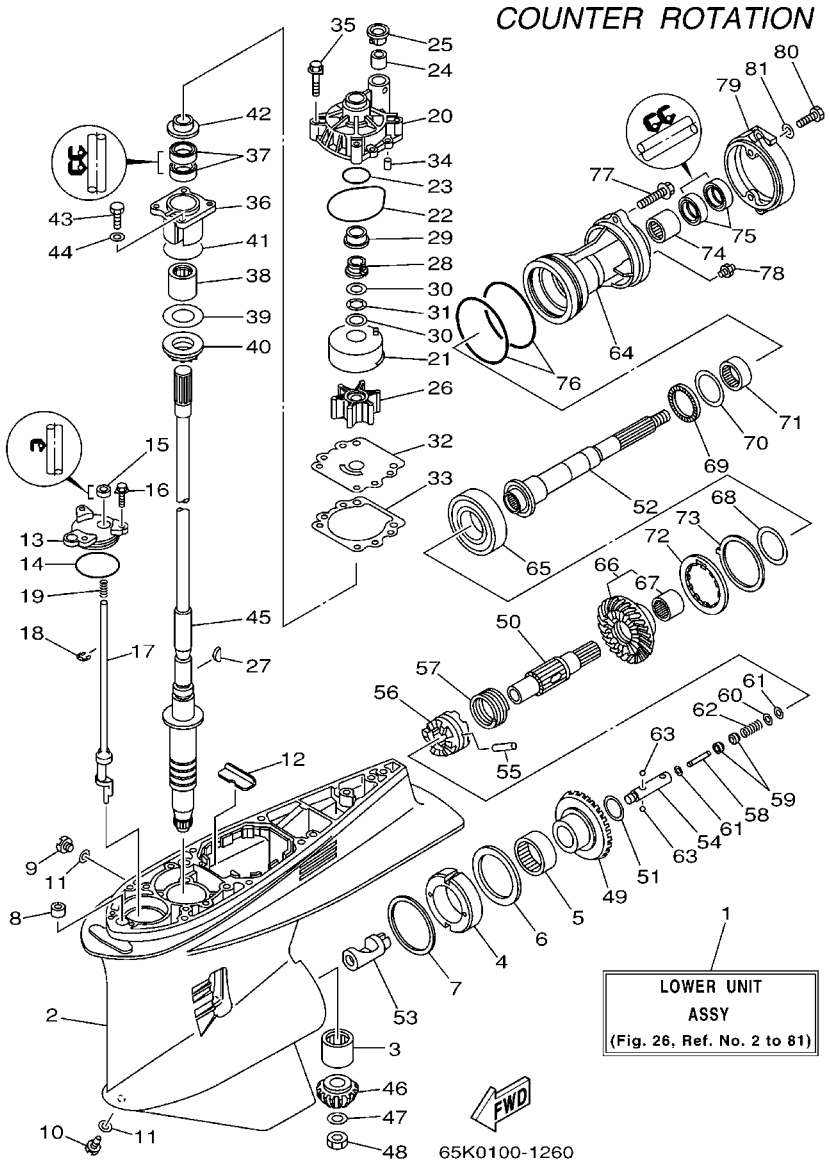

FIG. 26 LOWER CASING & DRIVE 3 IMPULSOR E INFERIOR 3

REF. NO.	PART NO. CODIGO Nº	DESCRIPTION DESCRIPCION	65J3	65L3	65K3	65M3		REMARKS OBSERVACIONES
43	97095–08025	BOLT PERNO			4	4		
44	92995–08600	WASHER ARANDELA			4	4		
45	61A–45501–20	DRIVE SHAFT COMP. EJE DE MANDO COMPL.			1	1		
46	61A–45551–03	PINION PINON			1	1		
47	90201–16M00	WASHER, PLATE ARANDELA PLANA			1	1		
48	90170–16M19	NUT TUERCA			1	1		
49	61B–45560–01	GEAR ENGRANE COMPLE 1			1	1		
50	61B–45611–01	SHAFT, PROPELLER EJE PROPUSOR			1	1		
51	90201–29M01	WASHER, PLATE ARANDELA PLANA			1	1		
52	61B–45611–20	SHAFT, PROPELLER EJE PROPUSOR			1	1		
53	61B–45641–01	SHIFTER CAMBIO			1	1		
54	61A–45634–01	SLIDE, SHIFT DESLIZADOR, CAMBIO			1	1		
55	61A–45632–00	PIN, CROSS PASADOR TRANSVERSAL			1	1		
56	61A–45631–03	CLUTCH, DOG EMBRAGUE DE GARRA			1	1		
57	61A–45633–00	RING, CROSS PIN ANILLO DE PASADOR			1	1		
58	6H1–45668–00	SHAFT, FREE EJE			1	1		
59	61A–45635–00	PLUNGER, SHIFT EMBOLO DE CAMBIO			2	2		
60	90201–02M00	WASHER, PLATE ARANDELA PLANA			1	1		
61	90183–02M03	NUT, SPRING TUERCA DE RESORTE			2	2		
62	90501–10M77	SPRING, COMPRESSION RESORTE DE COMPRESION			1	1		
63	93501–04011	BALL BOLA			2	2		
64	61B–45332–01–94	HOUSING, BEARING CAJA BALERO 2			1	1		
65	93332–000W2	BEARING COJINETE			1	1		
66	61B–45570–03	GEAR ENGRANE COMPL 2			1	1		
67	93315–43061	.BEARING .COJINETE DE RODILLOS			1	1		
68	61A–45577–00–10	SHIM (T:0.10MM) LAINA (T:0.10MM)			1	1		UR UR
	61A–45577–00–12	SHIM (T:0.12MM) LAINA (:0.12MM)			1	1		UR UR

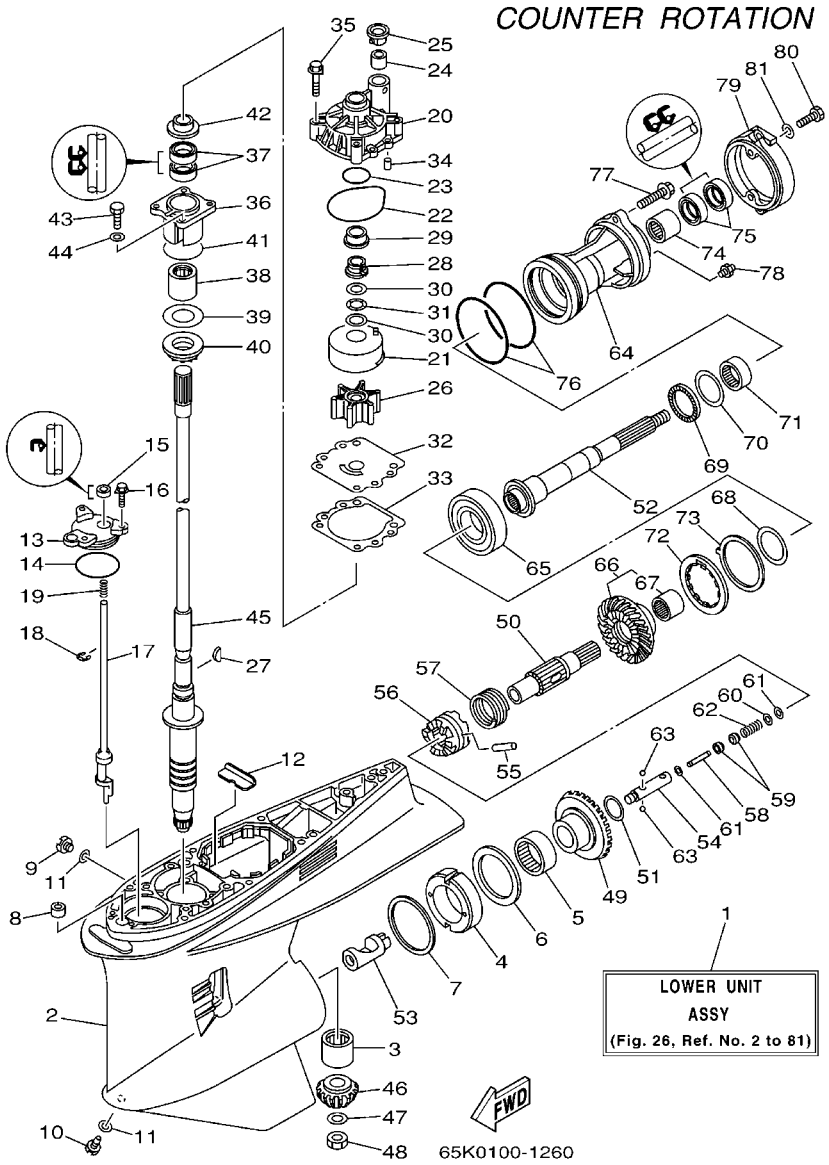

FIG. 26 LOWER CASING & DRIVE 3 IMPULSOR E INFERIOR 3

REF. NO.	PART NO. CODIGO Nº	DESCRIPTION DESCRIPCION	65J3	65L3	65K3	65M3		REMARKS OBSERVACIONES
68	61A–45577–00–15	SHIM (T:0.15MM) LAINA (T:0.15MM)			1	1		UR UR
	61A–45577–00–18	SHIM (T:0.18MM) LAINA (T:0.18MM)			1	1		UR UR
	61A–45577–00–30	SHIM (T:0.30MM) LAINA (T:0.30MM)			1	1		UR UR
	61A–45577–00–40	SHIM (T:0.40MM) LAINA (T:0.40MM)			1	1		UR UR
	61A–45577–00–50	SHIM (T:0.50MM) LAINA (T:0.50MM)			1	1		UR UR
69	93341–440U5	BEARING COJINETES CON RODAMIENTOS			1	1		
70	6K1–45578–01–10	SHIM (T:0.10MM) LAINA (T:0.10MM)			1	1		UR UR
	6K1–45578–01–12	SHIM (T:0.12MM) LAINA (:0.12MM)			1	1		UR UR
	6K1–45578–01–15	SHIM (T:0.15MM) LAINA (T:0.15MM)			1	1		UR UR
	6K1–45578–01–18	SHIM (T:0.18MM) LAINA (T:0.18MM)			1	1		UR UR
	6K1–45578–01–30	SHIM (T:0.30MM) LAINA (T:0.30MM)			1	1		UR UR
	6K1–45578–01–40	SHIM (T:0.40MM) LAINA (T:0.40MM)			1	1		UR UR
	6K1–45578–01–50	SHIM (T:0.50MM) LAINA (T:0.50MM)			1	1		UR UR
71	93315–440V6	BEARING COJINETE DE RODILLOS			1	1		
72	61B–45384–00	NUT TUERCA			1	1		
73	61B–45383–00	WASHER, CLAW ARANDELA DE UNA			1	1		
74	93317–330U5	BEARING COJINETE			1	1		
75	93101–30M17	OIL SEAL SELLO ACEITE			2	2		
76	93211–04384	O-RING ANILLO O			2	2		
77	90105–08M48	BOLT, FLANGE TORNILLO			2	2		
78	93700–09M00	NIPPLE, GREASE BOQUILLA DE ENGRASAR			1	1		
79	61A–45361–01–5B	CAP, LOWER CASING FUNDA INFERIOR			1	1		
80	97095–08020	BOLT PERNO			2	2		
81	92995–08600	WASHER ARANDELA			2	2		

FIG. 27 LOWER CASING & DRIVE 4 IMPULSOR E INFERIOR 4

COUNTER ROTATION

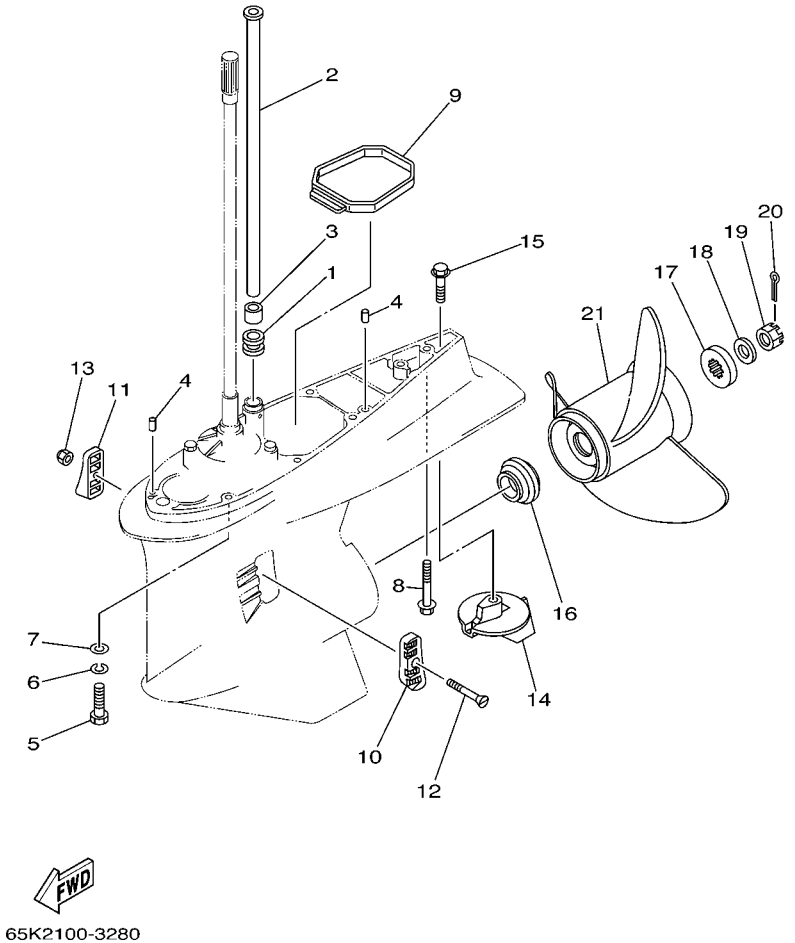

REF. NO.	PART NO. CODIGO Nº	DESCRIPTION DESCRIPCION	65J3	65L3	65K3	65M3		REMARKS OBSERVACIONES
1	6E5–44366–00	DAMPER, WATER SEAL GOMA DEL SELLO DE AGUA			1	1		
2	61A–44361–20	TUBE, WATER TUBO DE AGUA			1	1		
3	6E5–44365–00	DAMPER, WATER SEAL HULE DE SELLO DE AGUA			1	1		
4	93608–12M05	PIN, DOWEL PASADOR DE CLAVIJA			2	2		
5	97095–10045	BOLT PERNO			7	7		
6	92995–10100	WASHER ARANDELA			7	7		
7	92995–10600	WASHER ARANDELA			7	7		
8	90119–10MA2	BOLT, WITH WASHER TORNILLO CON ARANDELA			1	1		
9	61A–45375–00	DAMPER, SEAL GOMA DE SELLO			1	1		
10	61A–45214–10	COVER, WATER INLET CUBIERTA ENTRADA AGUA			1	1		
11	61A–45215–10	COVER, WATER INLET CUBIERTA ENTRADA AGUA			1	1		
12	90152–05003	SCREW, COUNTERSUNK TORNILLO EMBUTIDO			1	1		
13	90185–05002	NUT, SELF-LOCKING TUERCA AUTOBLOCANTE			1	1		
14	61A–45371–00	TAB-TRIM QUILLA ESTABILIZADOR			1	1		
15	90105–10M00	BOLT, FLANGE TORNILLO			1	1		
16	6E5–45987–01	SPACER ESPACIADOR			1	1		
17	688–45997–01	SPACER ESPACIADOR			1	1		
18	92990–18200	WASHER ARANDELA PLANA			1	1		
19	90171–18M04	NUT, CASTLE TUERCA ENTALLADA			1	1		
20	91490–40030	PIN, COTTER CHAVETA			1	1		
21	6K1–45970–01–98	PROPELLER (3X15-1/4"X15"-ML) PROPELA (3X15-1/4"X15"-ML)			1	1		UR UR
	6K1–45972–01–98	PROPELLER (3X13-3/4"X21"-ML) PROPELA (3X13-3/4"X21"-ML)			1	1		UR UR
	6K1–45974–02–98	PROPELLER (3X13-3/4"X19"-ML1) PROPELA (3X13-3/4"X19"-ML1)			1	1		UR UR
	6K1–45978–02–98	PROPELLER (3X13-3/4"X17"-ML1) PROPELA (3X13-3/4"X17"-ML1)			1	1		UR UR
	61B–45974–00–98	PROPELLER (3X14-1/2"X19"-TL) PROPELA (3X14-1/2"X19"-TL)			1	1		UR UR
	61B–45978–00–98	PROPELLER (3X15"X17"-TL) PROPELA (3X15"X17"-TL)			1	1		UR UR

FIG. 28 FUEL TANK — DEPOSITO DE COMBUSTIBLE

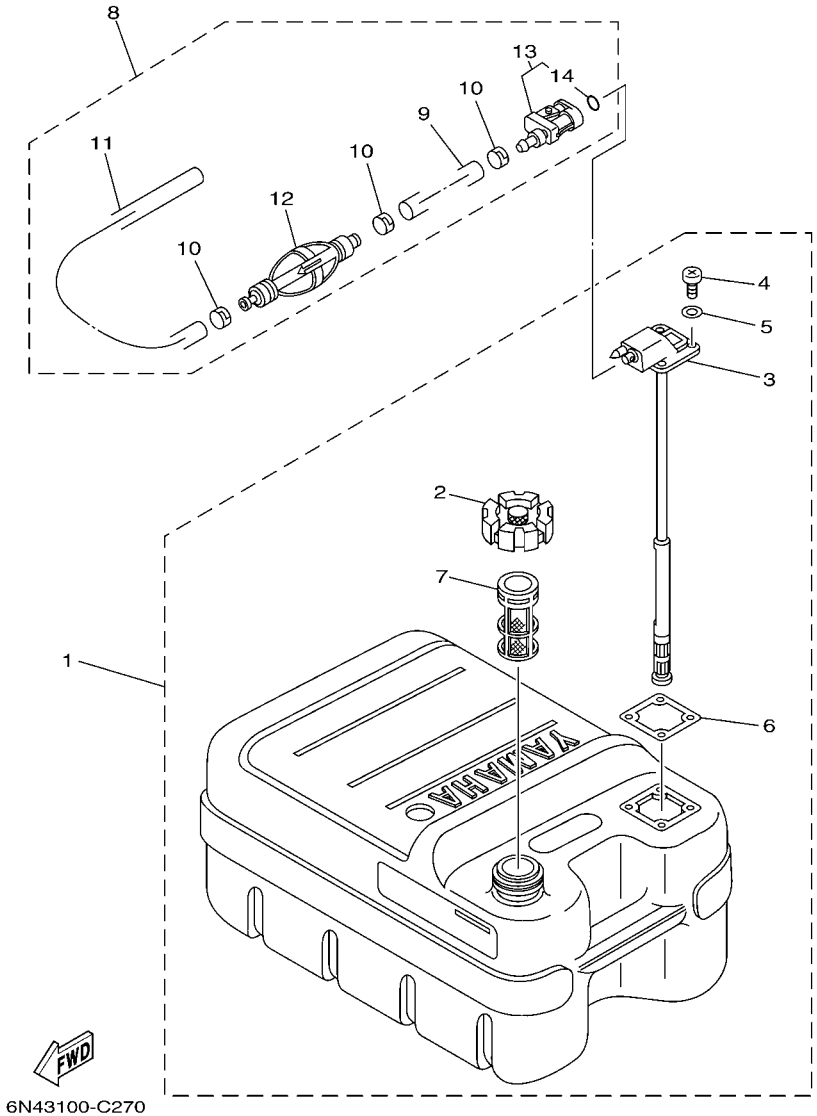

REF. NO.	PART NO. CODIGO Nº	DESCRIPTION DESCRIPCION	65J3	65L3	65K3	65M3		REMARKS OBSERVACIONES
1	6YJ–24201–10	FUEL TANK ASSY (24L) TANQUE DEL COMBUSTIBLE (24L)	1	1				AP FOR CAR AP FOR CAR
2	6YJ–24610–01	.CAP ASSY .TAPA COMPLETA	1	1				
3	6Y1–24260–12	.FUEL METER ASSY .MEDIDOR DE COMBUSTIBLE COMPL.	1	1				WITH INDICATOR WITH INDICATOR
4	98586–05016	.SCREW, PAN HEAD .TORNILLO DE CABEZA CON PLANA	4	4				
5	6Y1–24329–00	.SEAL .SELLO	4	4				
6	6Y1–24268–00	.GASKET, FUEL METER .EMPAQ MEDIDOR DE COMBUSTIBLE	1	1				
7	6YJ–24167–00	.STRAINER .COLADOR	1	1				
8	6Y2–24306–44	FUEL PIPE COMP. 1 TUBO COMBUST. COMPL 1	1	1				AP FOR CAR AP FOR CAR
9	90445–13M01	.HOSE (L2050) .MANGUERA (L2050)	1	1				
10	6E5–24351–51	.BAND 1 .ABRAZADERA 1	3	3				
11	90445–13M35	.HOSE (L250) .MANGUERA (L250)	1	1				
12	6Y2–24360–60	.PRIMER PUMP ASSY .SOPORTE BOMBA	1	1				
13	6Y2–24305–05	.FUEL PIPE JOINT COMP. 2 .CONECTOR MANGUERA COMBUST. 2	1	1				
14	93210–08287	..O-RING ..ANILLO O	1	1				

FIG. 29 STEERING GUIDE ATTACHMENT 1 ADITAMENTO GUIA DE GOBIERNO 1

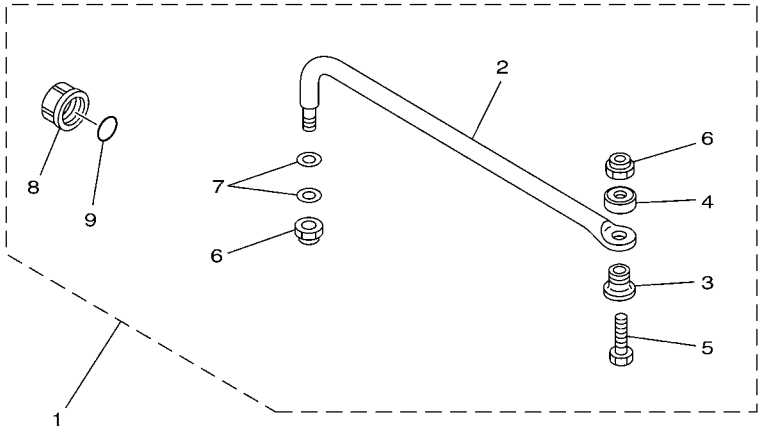

67H0100-9290

REF. NO.	PART NO. CODIGO Nº	DESCRIPTION DESCRIPCION	65J3	65L3	65K3	65M3		REMARKS OBSERVACIONES
1	6E5–61350–02	STEERING GUIDE ATTACHMENT KIT ESTUCHE ADITAMENTO GUIA DE TIM	1	1		1		AP 65M3-CAR ONLY AP 65M3-CAR ONLY
2	6E5–61351–01	.ROD, STEERING LINK .VARILLA ESLABON DIRECCION	1	1		1		
3	90387–10M61	.COLLAR .COLLAR	1	1		1		
4	90560–12M01	.SPACER .SEPARADOR	1	1		1		
5	6E5–61355–00	.BOLT .TORNILLO	1	1		1		
6	90185–09M01	.NUT, SELF-LOCKING .TUERCA AUTOBLOCANTE	2	2		2		
7	90201–10M20	.WASHER, PLATE .ARANDELA PLANA	2	2		2		
8	6E5–43145–01	.CAP, CLAMP BRACKET .TAPA	1	1		1		
9	93210–16275	.O-RING .ANILLO O	1	1		1		

FIG. 30 STEERING GUIDE ATTACHMENT 2 ADITAMENTO GUIA DE GOBIERNO 2

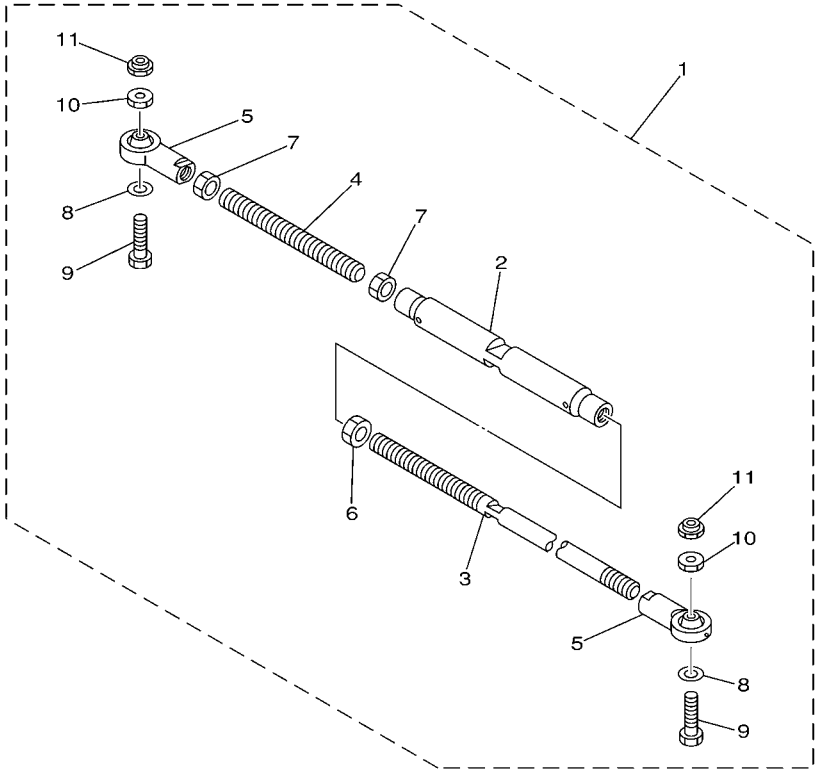

67H0100-0300

REF. NO.	PART NO. CODIGO Nº	DESCRIPTION DESCRIPCION	65J3	65L3	65K3	65M3		REMARKS OBSERVACIONES
1	6E5–61301–01	TWIN KIT (L:600-800MM) KIT ADITAMENTO (L:600-800MM)			1	1		AP AP
2	6E5–61313–00	.ADJUSTER .AJUSTADOR			1	1		
3	6E5–61311–11	.TIE BAR .BARRA SEPARADORA			1	1		
4	6E5–61315–00	.TIE BAR .ROTOR DE BOMBA AGUA			1	1		
5	6E5–61303–00	.STEERING EYE COMP. .OJO-DIRECCION COMPL.			2	2		
6	90170–14M06	.NUT .TUERCA			1	1		
7	95380–14700	.NUT .TUERCA			2	2		
8	90201–10M76	.WASHER, PLATE .ARANDELA PLANA			2	2		
9	90101–09M70	.BOLT .TORNILLO			2	2		
10	90170–09M05	.NUT .TUERCA			2	2		
11	90185–09M01	.NUT, SELF-LOCKING .TUERCA AUTOBLOCANTE			2	2		

FIG. 31 REMOTE CONTROL BOX CONTROL REMOTO COMPLETO

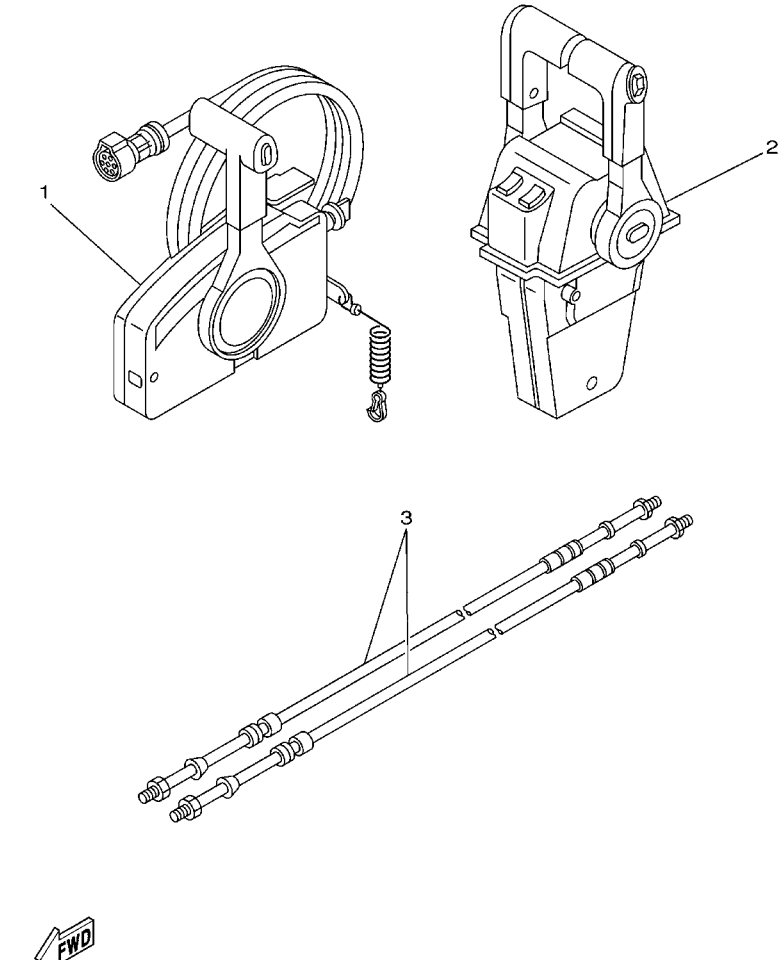

REF. NO.	PART NO. CODIGO Nº	DESCRIPTION DESCRIPCION	65J3	65L3	65K3	65M3		REMARKS OBSERVACIONES
1	703–48205–A4	REMOTE CONTROL ASSY (10P) REMOTO CONTROL COMPL. (10P)	1	1				AP FOR CAR AP FOR CAR
	703–48207–17	REMOTE CONTROL ASSY (10P) REMOTO CONTROL COMPL. (10P)		1				AP FOR BRA AP FOR BRA
2	704–48207–23	REMOTE CONTROL ASSY REMOTO CONTROL COMPL.			1	1		AP WITH PT/T SW. AP WITH PT/T SW.
3	701–48320–80	CABLE, REMOTE CONTROL L=17F CABLE CONTROL REMOTO L=17F	2	2	2	2		UR UR
	701–48320–40	CABLE, REMOTE CONTROL L=19F CABLE CONTROL REMOTO L=19F	2	2	2	2		UR UR

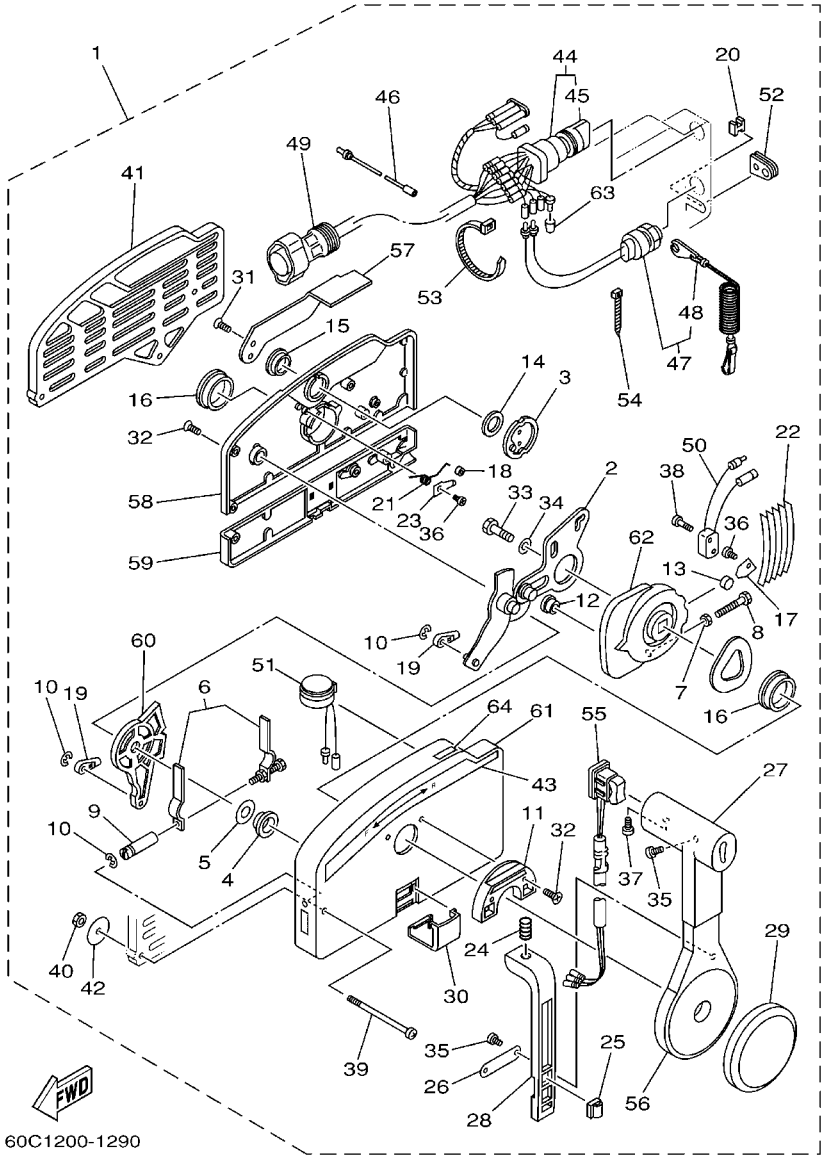

60C1200-1290

FIG. 32 REMOTE CONTROL ASSY 1 CONTROL REMOTO COMPL 1

REF. NO.	PART NO. CODIGO Nº	DESCRIPTION DESCRIPCION	65J3	65L3	65K3	65M3		REMARKS OBSERVACIONES
1	703–48205–A4	REMOTE CONTROL ASSY (10P) REMOTO CONTROL COMPL. (10P)	1	1				AP FOR CAR AP FOR CAR
	703–48207–17	REMOTE CONTROL ASSY (10P) REMOTO CONTROL COMPL. (10P)		1				AP FOR BRA AP FOR BRA
2	703–48261–01	.ARM, THROTTLE .BRAZO ACELERADOR	1	1				
3	703–48153–00	.SHAFT, FREE ACCEL. .EJE	1	1				
4	703–48235–00	.BUSHING .BUJE	1	1				
5	703–48268–00	.SPACER .ESPACIADOR 3	1	1				
6	703–48264–00	.THROTTLE, FRICTION .FRICCION ACELERADOR	1	1				
7	95380–05600	.NUT .TUERCA	1	1				
8	97380–05025	.BOLT .TORNILLO HEXAGONAL	1	1				
9	703–48265–00	.SHAFT, FRICTION .EJE FRICCION	1	1				
10	93430–06024	.CIRCLIP .SEGURO	3	3				
11	703–48245–00	.PLATE, LOCK .PLACA CERRADURA	1	1				
12	703–48252–00	.ROLLER, CAM .RODILLO LEVA	1	1				
13	701–48248–00	.ROLLER, FREE ACCEL. .RODILLO ACELERADOR LIBRE	1	1				
14	703–48198–00	.WASHER, WAVE .RONDANA ONDULADA 3	1	1				
15	703–48243–00	.BUSHING .BUJE 3	1	1				
16	703–48236–00	.BUSHING 1 .BUJE	2	2				
17	703–48189–00	.RETAINER .RETENEDOR	1	1				
18	703–48234–00	.ROLLER, DETENT .RODILLO	1	1				
19	703–48345–01	.CABLE END, REMOTE CONTROL 2 .TERMINAL CABLE DE CONTROL REM	2	2				
20	703–48358–00	.ANCHOR, CABLE .ABRAZADERA CABLE	1	1				
21	703–48244–00	.SPRING, FREE ACCEL. .RESORTE ACELERADOR LIBRE	1	1				
22	703–48238–00	.SPRING, DETENT .RESORTE	5	5				
23	703–48246–00	.SPACER .ESPACIADOR	1	1				
24	703–48227–00	.SPRING, NEUTRAL LOCK .RESORTE DE SEGURO	1	1				
25	703–82594–00	.CLAMP .GRAMPA	1	1				WITH PT/T SW. WITH PT/T SW.
26	703–48226–00	.PLATE, STOPPER .PLACA RETEN	1	1				

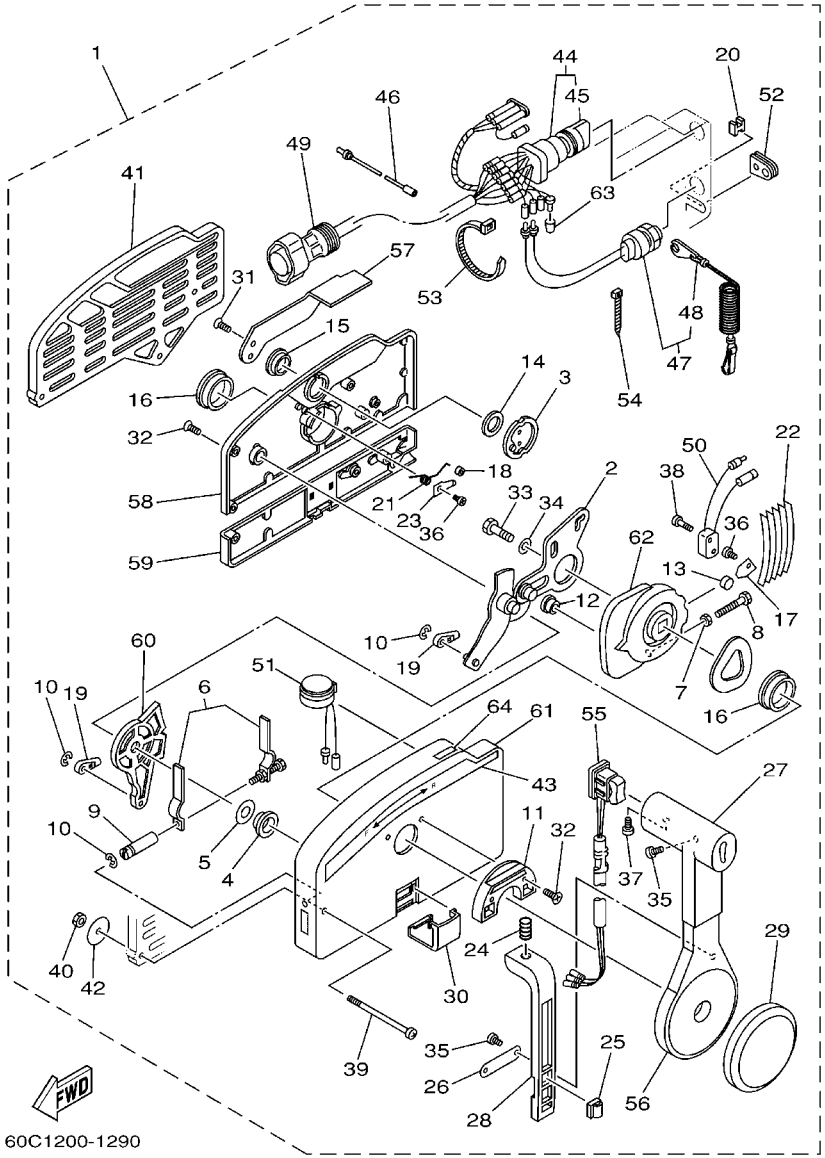

FIG. 32 REMOTE CONTROL ASSY 1 CONTROL REMOTO COMPL 1

REF. NO.	PART NO. CODIGO Nº	DESCRIPTION DESCRIPCION	65J3	65L3	65K3	65M3		REMARKS OBSERVACIONES
27	703–48222–00	.GRIP, CONTROL LEVER .MANGO DE PALANCA CONTROL	1	1				SINGLE SINGLE
28	703–48223–00	.LOCK, NEUTRAL .CERRADURA NEUTRO	1	1				
29	703–48225–00	.COVER .CUBIERTA	1	1				
30	703–48219–00	.COVER, LEAD .CUBIERTA	1	1				
31	703–48281–00	.SCREW .TORNILLO 1	2	2				
32	703–48282–00	.SCREW .TORNILLO 2	7	7				
33	97380–08030	.BOLT .TORNILLO HEXAGONAL	1	1				
34	92990–08600	.WASHER, PLATE .ARANDELA PLANA	1	1				
35	98580–04010	.SCREW, PAN HEAD .TORNILLO DE CABEZA CRUZADA	3	3				
36	98580–04006	.SCREW, PAN HEAD .TORNILLO DE CABEZA CRUZADA	2	2				
37	98580–05010	.SCREW, PAN HEAD .TORNILLO DE CABEZA CRUZADA	1	1				
38	98580–03015	.SCREW, PAN HEAD .TORNILLO DE CABEZA CRUZADA	2	2				
39	703–48291–10	.SCREW (M6) .TORNILLO (M6)	3	3				
40	95380–06600	.NUT, HEXAGON .TUERCA	3	3				
41	703–48293–10	.SPACER, REMOTE CONTROL .ESPACIADOR	1	1				SINGLE SINGLE
42	701–48287–00	.WASHER .ARANDELA	3	3				
43	703–48215–00	.GRAPHIC .CALCOMANIA 1	1	1				
44	703–82510–12	.MAIN SWITCH ASSY .CONJUNTO DE LLAVE IGNICION	1	1				FOR 703-48205-A4 FOR 703-48205-A4
	703–82510–43	.MAIN SWITCH ASSY .CONJUNTO DE LLAVE IGNICION		1				FOR 703-48207-17 FOR 703-48207-17
45	676–82577–00	..CAP, KEY ..TAPA	1	1				FOR 703-82510-12 FOR 703-82510-12
	703–82577–00	..CAP, KEY ..TAPA		1				FOR 703-82510-43 FOR 703-82510-43
46	703–82531–00	.WIRE, LEAD .CABLE CONDUCTOR	1	1				
47	688–82575–01	.ENGINE STOP SWITCH ASSY .INTERRUPTOR DE PARADA COMPL	1	1				
48	682–82556–00	..STOPPER ..RETENER	1	1				
49	688–8258A–20	.EXTENSION, WIRE HARNESS .EXTENSION, ARNES DE CABLES	1	1				L:5M (10P) L:5M (10P)
50	703–82540–00	.NEUTRAL SWITCH ASSY .INTERRUPTOR NEUTRAL COMPL	1	1				
51	703–83383–A0	.BUZZER .ZUMBADOR	1	1				FOR 703-48205-A4 FOR 703-48205-A4

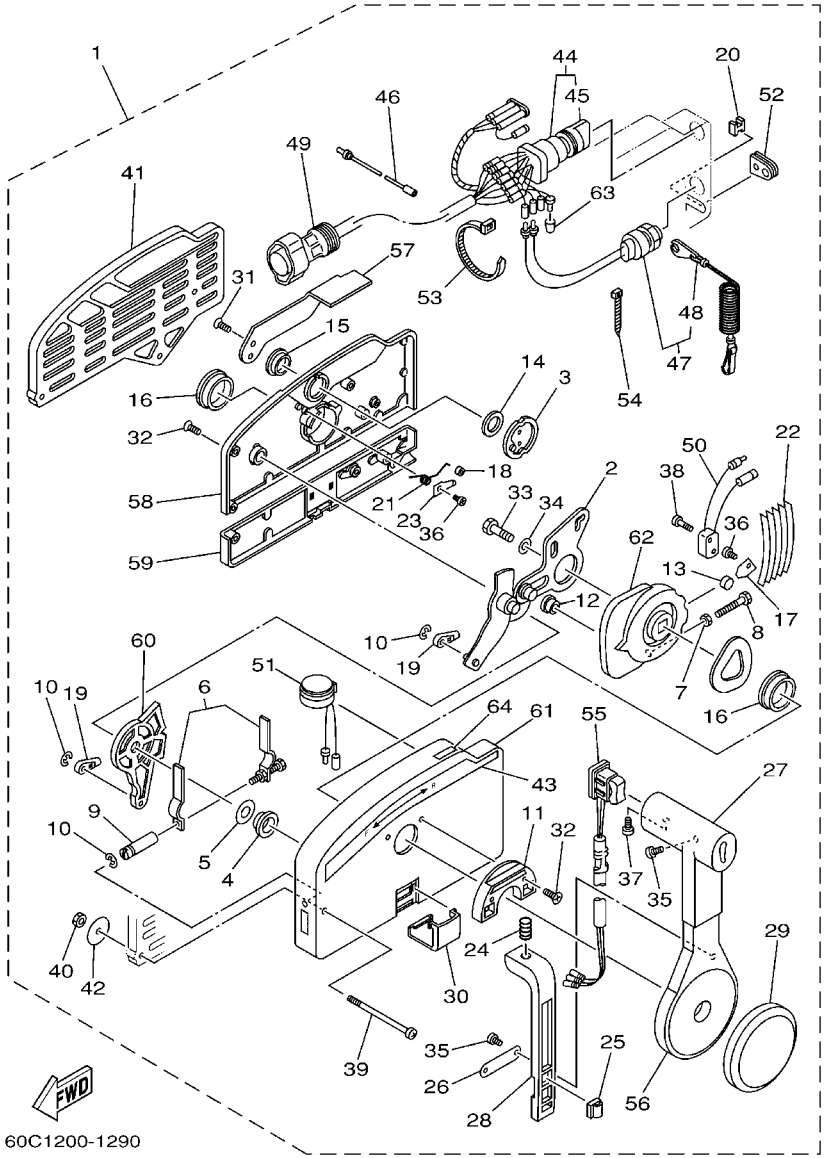

FIG. 32 REMOTE CONTROL ASSY 1 CONTROL REMOTO COMPL 1

REF. NO.	PART NO. CODIGO Nº	DESCRIPTION DESCRIPCION	65J3	65L3	65K3	65M3		REMARKS OBSERVACIONES
51	703–83383–02	.BUZZER .ZUMBADOR		1				FOR 703-48207-17 FOR 703-48207-17
52	703–48284–00	.GROMMET .TAPON 1	1	1				FOR 703-48205-A4 FOR 703-48205-A4
	703–48284–10	.GROMMET .TAPON 1		1				FOR 703-48207-17 FOR 703-48207-17
53	703–82591–00	.BAND .BANDA	1	1				FOR 703-48205-A4 FOR 703-48205-A4
	703–82591–00	.BAND .BANDA		3				FOR 703-48207-17 FOR 703-48207-17
54	703–82592–00	.BAND .BANDA	1	1				
55	703–82563–02	.TRIM & TILT SWITCH ASSY .INTERRUPTOR DE INCLINACION	1	1				FOR 703-48205-A4 FOR 703-48205-A4
	703–82563–12	.TRIM & TILT SWITCH ASSY .INTERRUPTOR DE INCLINACION		1				FOR 703-48207-17 FOR 703-48207-17
56	703–48221–00	.LEVER, CONTROL .PALANCA CONTROL	1	1				
57	703–48152–00	.KNOB, FREE ACCEL. .PERILLA	1	1				
58	703–48212–00	.BACK PLATE 1 .PLACA TRASERA 1	1	1				
59	703–48213–00	.BACK PLATE 2 .PLACA TRASERA 2	1	1				
60	703–48271–00	.ARM, SHIFT .BRAZO CAMBIADOR	1	1				
61	703–48211–01	.HOUSING,1 .CAJA	1	1				
62	703–48232–00	.GEAR .ENGRANAJE 1	1	1				
63	703–82542–00	.CAP .TAPA	1	1				FOR 703-48205-A4 FOR 703-48205-A4
64	703–48218–00	.GRAPHIC .CALCAMONIA	1	1				FOR 703-48205-A4 FOR 703-48205-A4

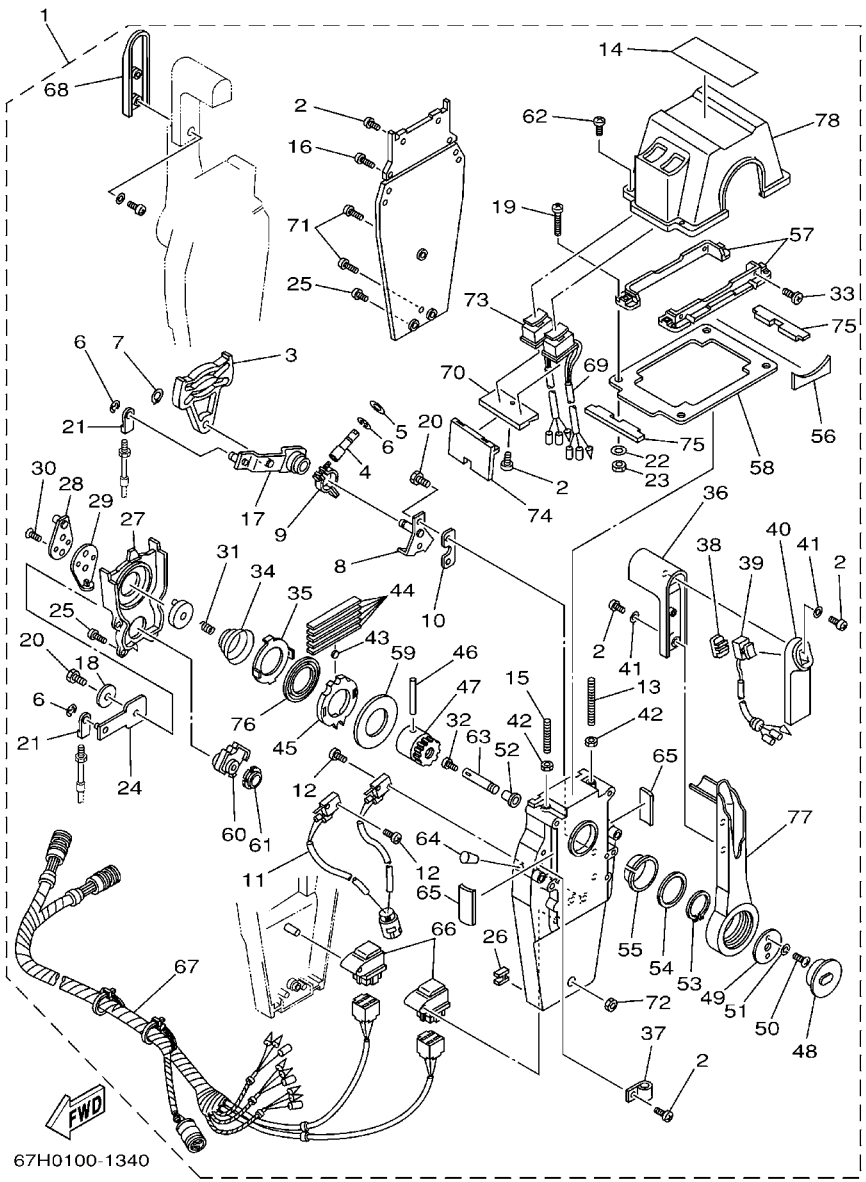

FIG. 33 REMOTE CONTROL ASSY 2 CONTROL REMOTO COMPL 2

REF. NO.	PART NO. CODIGO Nº	DESCRIPTION DESCRIPCION	65J3	65L3	65K3	65M3		REMARKS OBSERVACIONES
1	704–48207–23	REMOTE CONTROL ASSY REMOTO CONTROL COMPL.			1	1		AP WITH PT/T SW. AP WITH PT/T SW.
2	97890–05016	.SCREW, PAN HEAD .TORNILLO			12	12		
3	EL8–48251–00	.PLATE, CAM .PLACA,LEVA			2	2		
4	704–48265–00	.SHAFT, FRICTION .EJE FRICCION			2	2		
5	701–48246–00	.SPACER .ESPACIADOR			2	2		
6	93430–06024	.CIRCLIP .SEGURO			8	8		
7	EL8–48259–00	.CIRCLIP 1 .SEGURO			2	2		
8	704–48262–00	.SHAFT, THROTTLE .EJE DE ACELERADOR			2	2		
9	704–48264–00	.THROTTLE, FRICTION .FRICCION ACELERADOR			2	2		
10	704–48266–00	.SPACER .ESPACIADOR 2			2	2		
11	704–82540–10	.NEUTRAL SWITCH ASSY .INTERRUPTOR NEUTRAL COMPL			1	1		
12	6A5–48129–10	.SCREW 3 .TORNILLO 3			4	4		
13	EL8–48281–00	.SCREW .TORNILLO 1			2	2		
14	704–48215–10	.GRAPHIC .CALCOMANIA 1			1	1		
15	704–48281–00	.SCREW .TORNILLO 1			2	2		
16	97890–05025	.SCREW, PAN HEAD .TORNILLO			4	4		
17	704–48261–00	.ARM, THROTTLE .BRAZO ACELERADOR			2	2		
18	EL8–48191–00	.WASHER 1 .ARANDELA			2	2		
19	704–48283–00	.SCREW .TORNILLO 3			4	4		
20	97380–06018	.BOLT .TORNILLO HEXAGONAL			6	6		
21	703–48345–01	.CABLE END, REMOTE CONTROL 2 .TERMINAL CABLE DE CONTROL REM			4	4		
22	704–48287–00	.WASHER .ARANDELA			4	4		
23	95380–05600	.NUT .TUERCA			4	4		
24	EL8–48271–00	.ARM, SHIFT .BRAZO CAMBIADOR			2	2		
25	EL8–48127–00	.SCREW 1 .TORNILLO 1			16	16		
26	703–48358–00	.ANCHOR, CABLE .ABRAZADERA CABLE			2	2		
27	EL8–48231–00	.HOUSING, GEAR .CAJA,ENGRANAJE			2	2		

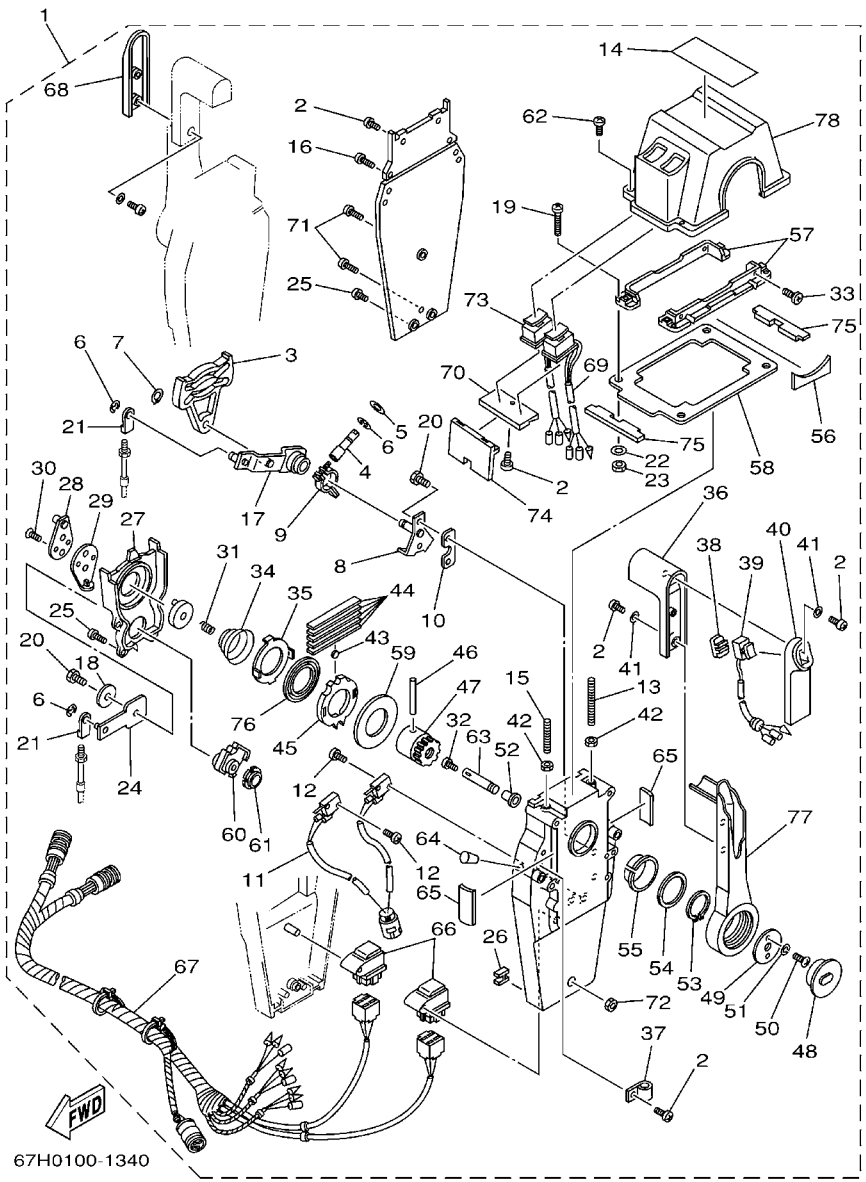

FIG. 33 REMOTE CONTROL ASSY 2 CONTROL REMOTO COMPL 2

REF. NO.	PART NO. CODIGO Nº	DESCRIPTION DESCRIPCION	65J3	65L3	65K3	65M3		REMARKS OBSERVACIONES
28	EL8–48241–00	.ARM, DRIVE .BRAZO,MANDO			2	2		
29	EL8–48254–00	.STOPPER, THROTTLE ADJUSTING .TAPON			2	2		
30	92780–06020	.SCREW, FLAT HEAD .TORNILLO CABEZA PLANA			4	4		
31	EL8–48158–00	.SPRING 1 .RESORTE 1			2	2		
32	98580–04006	.SCREW, PAN HEAD .TORNILLO DE CABEZA CRUZADA			2	2		
33	98780–05018	.SCREW, FLAT HEAD .TORNILLO CABEZA PLANA			4	4		
34	EL8–48244–00	.SPRING, FREE ACCEL. .RESORTE ACELERADOR LIBRE			2	2		
35	EL8–48245–00	.PLATE, LOCK .PLACA CERRADURA			2	2		
36	704–48222–00	.GRIP, CONTROL LEVER .MANGO DE PALANCA CONTROL			2	2		
37	704–82594–00	.CLAMP .GRAMPA			1	1		
38	704–48228–00	.HOLDER, SWITCH .MORDAZA			1	1		
39	704–82563–31	.TRIM & TILT SWITCH ASSY .INTERRUPTOR DE INCLINACION			1	1		
40	704–48229–00	.GRIP, CONTROL LEVER .MANGO DE PALANCA CONTROL 2			1	1		
41	92990–05300	.WASHER, INTERNAL TOOTH .ARANDELA PLANA			6	6		
42	95380–06600	.NUT, HEXAGON .TUERCA			4	4		
43	701–48248–00	.ROLLER, FREE ACCEL. .RODILLO ACELERADOR LIBRE			2	2		
44	703–48238–00	.SPRING, DETENT .RESORTE			10	10		
45	EL8–48232–00	.GEAR 1 .ENGRANAJE 1			2	2		
46	EL8–48164–00	.PIN 2 .PASADOR 2			2	2		
47	704–48242–00	.SHAFT, DRIVE .EJE, PROPULSION			2	2		
48	704–48225–00	.COVER .CUBIERTA			2	2		
49	704–48192–00	.WASHER 2 .RONDANA 2			2	2		
50	97890–06018	.SCREW, PAN HEAD .TORNILLO			4	4		
51	92990–06300	.WASHER, INTERNAL TOOTH .ARANDELA PLANA			4	4		
52	702–48263–00	.BUSHING .BUJE 4			2	2		
53	EL8–48279–00	.CIRCLIP 2 .SEGURO2			2	2		
54	704–48193–00	.WASHER 3 .RONDANA 3			2	2		

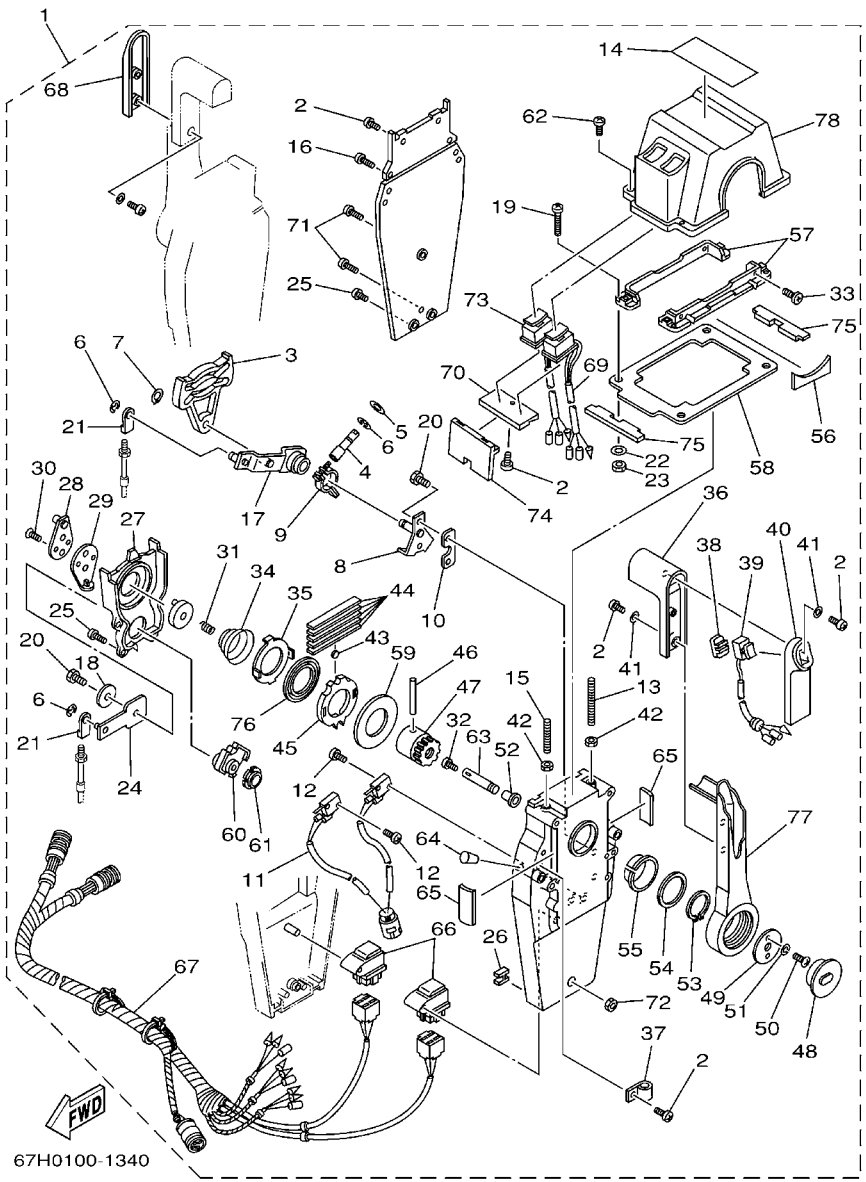

FIG. 33 REMOTE CONTROL ASSY 2 CONTROL REMOTO COMPL 2

REF. NO.	PART NO. CODIGO Nº	DESCRIPTION DESCRIPCION	65J3	65L3	65K3	65M3		REMARKS OBSERVACIONES
55	EL8–48234–00	.BUSHING 1 .BUJE			2	2		
56	704–48219–00	.COVER, LEAD .CUBIERTA			2	2		
57	704–48144–00	.PLATE, STOPPER 2 .PLACA, RETEN 2			2	2		
58	704–48176–10	.GROMMET .TOPON			1	1		
59	703–48192–00	.WASHER 2 .RONDANA 2			2	2		
60	EL8–48233–00	.GEAR 2 .ENGRANAJE 2			2	2		
61	703–48235–00	.BUSHING .BUJE			2	2		
62	704–48282–00	.SCREW .TORNILLO 2			4	4		
63	EL8–48153–10	.SHAFT, FREE ACCEL. .EJE			2	2		
64	704–48166–00	.PLUG .TAPON			2	2		
65	704–48284–00	.GROMMET .TAPON 1			4	4		
66	704–81950–00	.RELAY ASSY .RELE COMPLETO			2	2		
67	704–82590–10	.WIRE HARNESS ASSY .CONJUNTO DE CABLES			1	1		
68	704–48229–10	.GRIP, CONTROL LEVER .MANGO DE PALANCA CONTROL 2			1	1		
69	704–82563–E0	.TRIM & TILT SWITCH ASSY .INTERRUPTOR DE INCLINACION			1	1		
70	704–48228–10	.HOLDER, SWITCH .MORDAZA			1	1		
71	704–48128–00	.SCREW 2 .TORNILLO 2			3	3		
72	704–48156–00	.NUT 1 .TUERCA 1			1	1		
73	704–82563–F0	.TRIM & TILT SWITCH ASSY .INTERRUPTOR DE INCLINACION			1	1		
74	704–48285–00	.GROMMET 2 .TAPON 2			1	1		
75	704–48286–00	.GROMMET 3 .TAPON 3			2	2		
76	704–48178–00	.PLATE, SHIFT .PLACA			2	2		
77	704–48221–00	.LEVER, CONTROL .PALANCA CONTROL			2	2		
78	704–48119–20	.COVER .CUBIERTA			1	1		

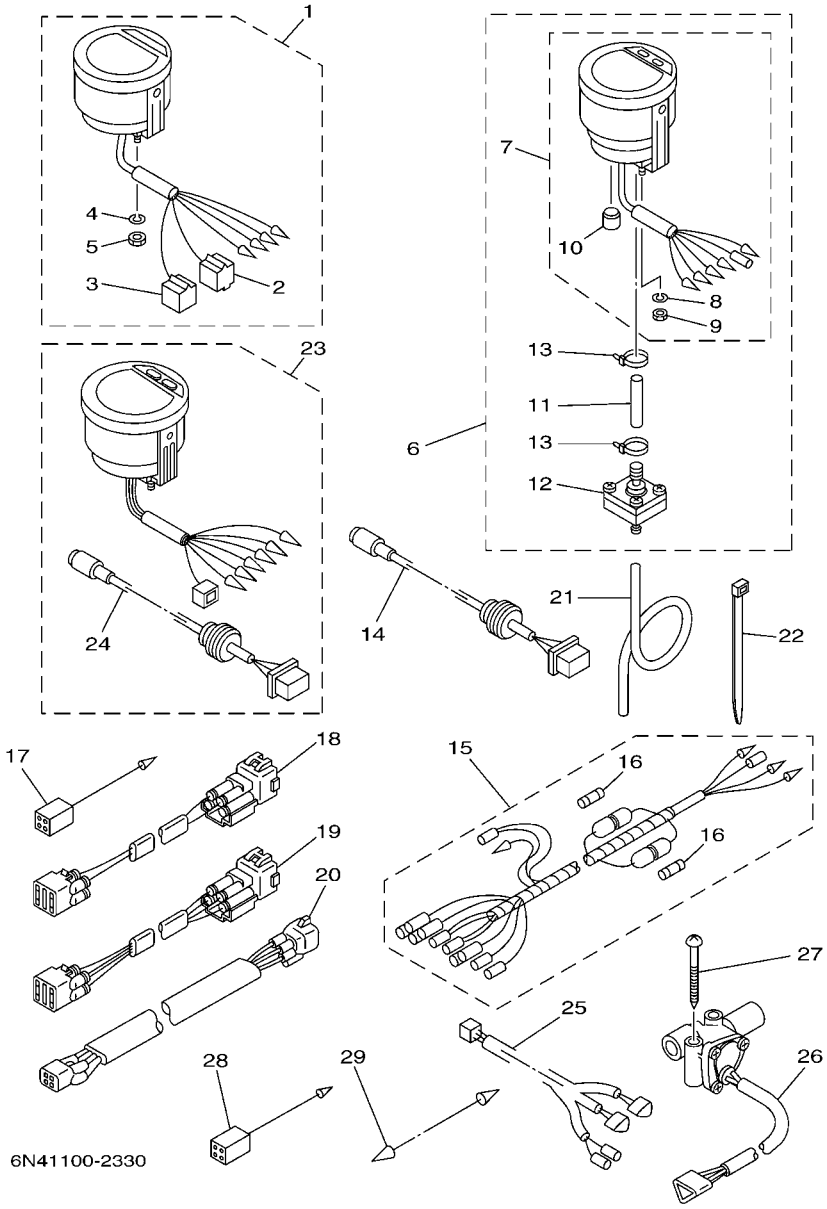

FIG. 34 METER — MEDIDOR

REF. NO.	PART NO. CODIGO Nº	DESCRIPTION DESCRIPCION	65J3	65L3	65K3	65M3		REMARKS OBSERVACIONES
1	6Y5–8350T–03	TACHOMETER ASSY TACOMETRO COMPLETO	1	1	1	1		AP AP
2	9E450–04433	.CONNECTOR .CONECTOR	1	1	1	1		M-4-W M-4-W
3	9E450–04533	.CONNECTOR .CONECTOR	1	1	1	1		F-4-W F-4-W
4	92990–04100	.WASHER, SPRING .ARANDELA PLANA	2	2	2	2		
5	95380–04600	.NUT .TUERCA	2	2	2	2		
6	6Y5–83500–S5	DIGITAL SPEEDOMETER ASSY VELOCIMETRO DIGITAL COMPLETO	1	1				AP AP
7	6Y5–83570–S5	.SPEEDOMETER ASSY .VELOCIMETRO COMPLETO	1	1				
8	92990–04100	..WASHER, SPRING ..ARANDELA PLANA	2	2				
9	95380–04600	..NUT ..TUERCA	2	2				
10	6Y5–83533–T2	..GROMMET ..ANILLO PROTECTOR	1	1				
11	6Y5–83557–31	.TUBE .ENCHUFE DE ACEITE	1	1				
12	6Y5–83728–00	.CONNECTOR ASSY .CONEXION COMPLET	1	1				
13	90465–11M10	.CLAMP .BRIDA	2	2				
14	6Y5–87122–S0	CORD ASSY 1 CORDON COMPLETO	1	1				AP AP
15	6Y5–83553–M0	WIRE, LEAD CABLE CONDUCTOR	1	1				AP AP
	6Y5–83553–00	WIRE, LEAD CABLE CONDUCTOR			1	1		AP AP
16	1E6–82151–00	.FUSE (10A) .FUSIBLE (10A)	2	2				FOR 6Y5-83553-M0 FOR 6Y5-83553-M0
	1E6–82151–00	.FUSE (10A) .FUSIBLE (10A)			1	1		FOR 6Y5-83553-00 FOR 6Y5-83553-00
17	6Y5–82117–00	WIRE, LEAD (BLACK) CABLE, CONDUCTOR (NEGRO)	1	1				AP AP
18	6R3–82521–70	WIRE, LEAD CABLE CONDUCTOR	1	1				AP FOR CAR 7M AP FOR CAR 7M
	6R3–82521–80	WIRE, LEAD CABLE CONDUCTOR			1	1		AP FOR CAR 8M AP FOR CAR 8M
19	6R3–82553–70	EXTENSION, WIRE LEAD CABLE	1	1				AP FOR CAR 4P,7M AP FOR CAR 4P,7M
	6R3–82553–80	EXTENSION, WIRE LEAD CABLE			1	1		AP FOR CAR 4P,8M AP FOR CAR 4P,8M
	68F–82553–80	EXTENSION, WIRE LEAD CABLE		1				AP FOR BRA AP FOR BRA
	68F–82553–90	EXTENSION, WIRE LEAD CABLE				1		AP FOR BRA AP FOR BRA
20	6R3–82553–30	EXTENSION, WIRE LEAD L=3000 CABLE L=3000			2	2		AP FOR CAR AP FOR CAR
21	6Y5–83557–00	TUBE (6M) TUBO (6M)	1	1				AP FOR CAR AP FOR CAR

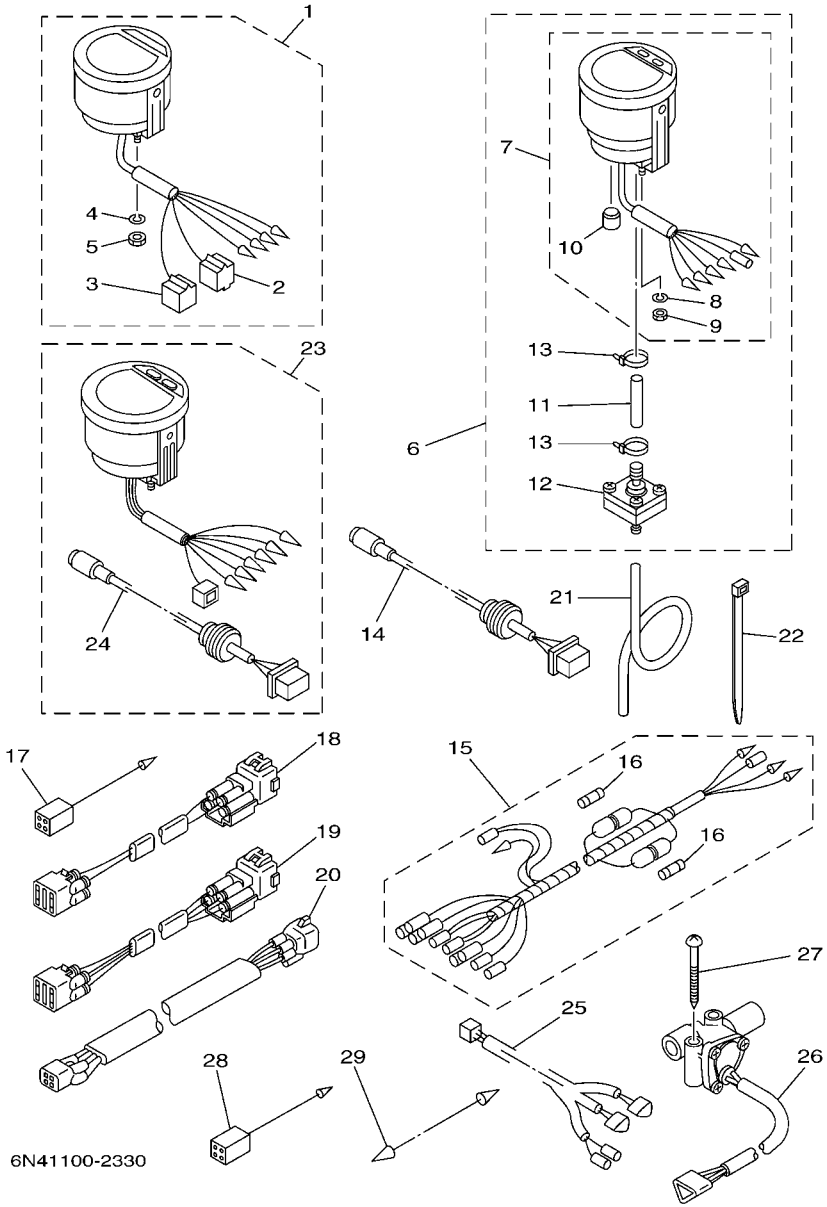

FIG. 34 METER MEDIDOR

REF. NO.	PART NO. CODIGO Nº	DESCRIPTION DESCRIPCION	65J3	65L3	65K3	65M3		REMARKS OBSERVACIONES
21	6Y5–83557–10	TUBE (8M) TUBO (8M)		1				AP FOR BRA AP FOR BRA
22	90465–11M10	CLAMP BRIDA	2	2				AP AP
23	6Y5–8350F–00	FUEL MANAGEMENT METER MEDIDOR DE GESTION COMBUSTIBLE				1		AP FOR BRA AP FOR BRA
24	6Y5–87122–S0	.CORD ASSY 1 .CORDON COMPLETO				1		
25	6Y5–83553–F1	WIRE, LEAD CABLE CONDUCTOR				1		AP FOR BRA AP FOR BRA
26	6Y5–85752–01	SENDER UNIT ASSY, FUEL METER UNIDAD TRANSM MED.COMBUST.				2		AP FOR BRA AP FOR BRA
27	90158–06002	SCREW, WOOD TORNILLO DE MADERA				4		AP FOR BRA AP FOR BRA
28	6Y5–82117–00	WIRE, LEAD (BLACK) CABLE, CONDUCTOR (NEGRO)				1		AP FOR BRA AP FOR BRA
29	703–82531–00	WIRE, LEAD CABLE CONDUCTOR				1		AP FOR BRA AP FOR BRA

FIG. 35 SWITCH & PANEL 1 — PANEL DE INTERRUPTOR 1

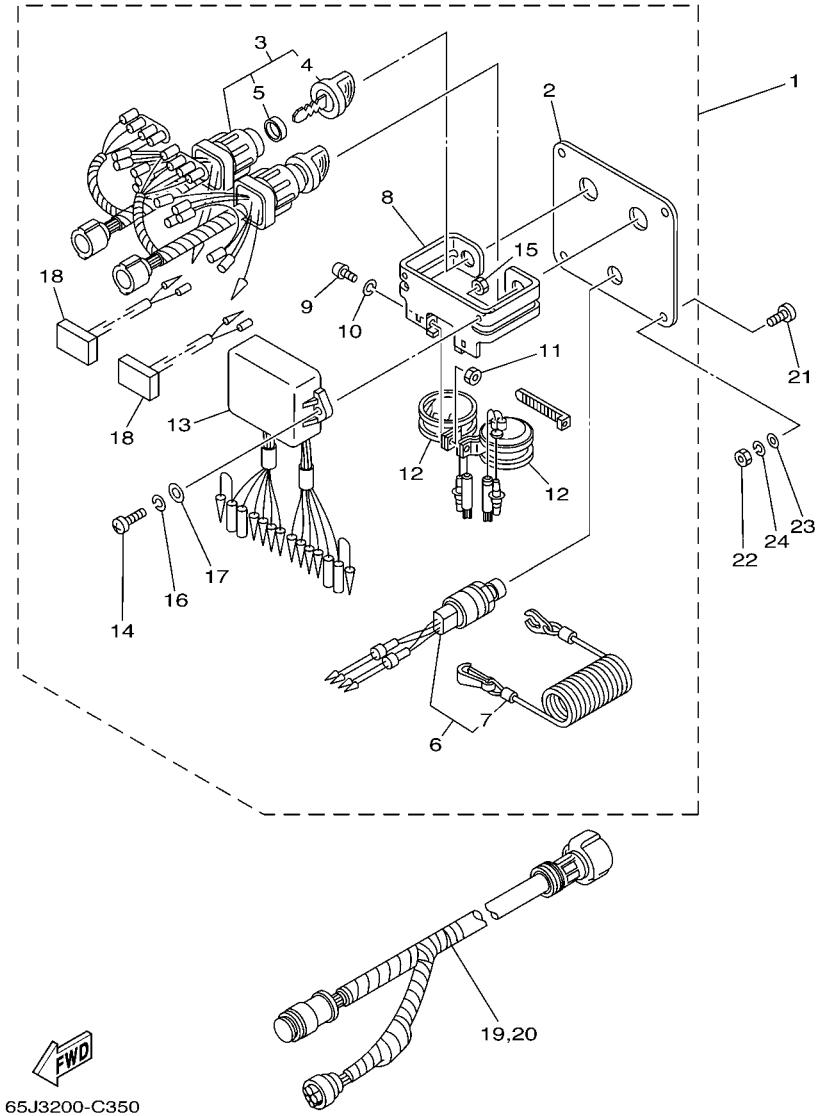

REF. NO.	PART NO. CODIGO Nº	DESCRIPTION DESCRIPCION	65J3	65L3	65K3	65M3		REMARKS OBSERVACIONES
1	6K1–82570–07	PANEL SWITCH ASSY INTERRUPTOR DE PANEL COMPL.				1		AP FOR BRA AP FOR BRA
2	6K1–82571–01	.PANEL, SWITCH .PANEL DE INTERRUPTOR				1		
3	6K1–82510–06	.MAIN SWITCH ASSY .CONJUNTO DE LLAVE IGNICION				2		
4	703–82577–00	..CAP, KEY ..TAPA				1		
5	6K1–82532–00	..CAP ..TAPA				1		
6	6K1–82575–00	.ENGINE STOP SWITCH ASSY .INTERRUPTOR DE PARADA COMPL				1		
7	682–82556–00	..STOPPER ..RETENER				1		
8	6K1–83614–01	.BRACKET .SOPORTE				1		
9	98980–05010	.SCREW, BIND .TORNILLO DE LIGAR				2		
10	92990–05100	.WASHER, SPRING .ARANDELA PLANA				2		
11	95380–05600	.NUT .TUERCA				2		
12	688–83383–11	.BUZZER .ZUMBADOR				2		
13	6K1–85830–01	.CONTROL UNIT ASSY .UNIDAD CONTROL				1		
14	98980–06020	.SCREW, BIND .TORNILLO DE LIGAR				2		
15	95380–06600	.NUT, HEXAGON .TUERCA				2		
16	92990–06100	.WASHER, SPRING .ARANDELA PLANA				2		
17	92990–06600	.WASHER, PLATE .ARANDELA PLANA				2		
18	6K1–81980–00	.DIODE ASSY .RECTIFICADOR 2				2		
19	6K1–8258A–40	EXTENSION, WIRE HARNESS EXTENSION, ARNES DE CABLES				1		AP FOR BRA AP FOR BRA
20	61B–8258A–01	EXTENSION, WIRE HARNESS EXTENSION, ARNES DE CABLES				1		AP FOR BRA AP FOR BRA
21	90149–05M05	SCREW TORNILLO DE REGLAJE				4		AP FOR BRA AP FOR BRA
22	95380–05600	NUT TUERCA				4		AP FOR BRA AP FOR BRA
23	92990–05600	WASHER, PLATE ARANDELA PLANA				4		AP FOR BRA AP FOR BRA
24	92990–05100	WASHER, SPRING ARANDELA PLANA				4		AP FOR BRA AP FOR BRA

FIG. 36 SWITCH & PANEL 2 — PANEL DE INTERRUPTOR 2

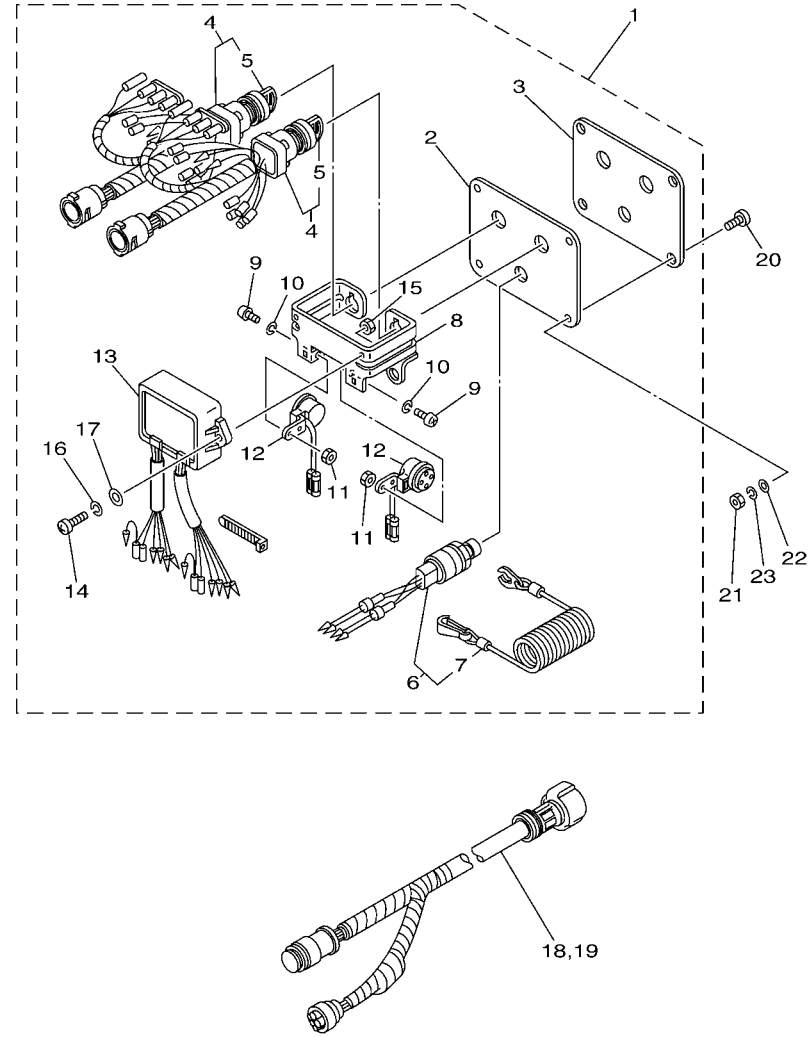

67H1100-2360

REF. NO.	PART NO. CODIGO Nº	DESCRIPTION DESCRIPCION	65J3	65L3	65K3	65M3		REMARKS OBSERVACIONES
1	61B–82570–02	PANEL SWITCH ASSY INTERRUPTOR DE PANEL COMPL.			1	1		AP FOR CAR AP FOR CAR
2	61B–82588–01	.PLATE .PLACA			1	1		
3	61B–82551–01	.STOP SWITCH ASSY .INTERRUP. DE PARADA COMPLTTO			1	1		
4	61B–82510–01	.MAIN SWITCH ASSY .CONJUNTO DE LLAVE IGNICION			2	2		
5	676–82577–00	..CAP, KEY ..TAPA			1	1		
6	6K1–82575–00	.ENGINE STOP SWITCH ASSY .INTERRUPTOR DE PARADA COMPL			1	1		
7	682–82556–00	..STOPPER ..RETENER			1	1		
8	6K1–83614–01	.BRACKET .SOPORTE			1	1		
9	98980–05010	.SCREW, BIND .TORNILLO DE LIGAR			2	2		
10	92990–05100	.WASHER, SPRING .ARANDELA PLANA			2	2		
11	95380–05600	.NUT .TUERCA			2	2		
12	6R5–83383–00	.BUZZER .ZUMBADOR			2	2		
13	61B–85830–00	.CONTROL UNIT ASSY .UNIDAD CONTROL			1	1		
14	98980–06020	.SCREW, BIND .TORNILLO DE LIGAR			2	2		
15	95380–06600	.NUT, HEXAGON .TUERCA			2	2		
16	92990–06100	.WASHER, SPRING .ARANDELA PLANA			2	2		
17	92990–06600	.WASHER, PLATE .ARANDELA PLANA			2	2		
18	6K1–8258A–40	EXTENSION, WIRE HARNESS EXTENSION, ARNES DE CABLES			1	1		AP FOR CAR AP FOR CAR
19	61B–8258A–01	EXTENSION, WIRE HARNESS EXTENSION, ARNES DE CABLES			1	1		AP FOR CAR AP FOR CAR
20	90149–05M05	SCREW TORNILLO DE REGLAJE			4	4		AP FOR CAR AP FOR CAR
21	95380–05600	NUT TUERCA			4	4		AP FOR CAR AP FOR CAR
22	92990–05600	WASHER, PLATE ARANDELA PLANA			4	4		AP FOR CAR AP FOR CAR
23	92990–05100	WASHER, SPRING ARANDELA PLANA			4	4		AP FOR CAR AP FOR CAR

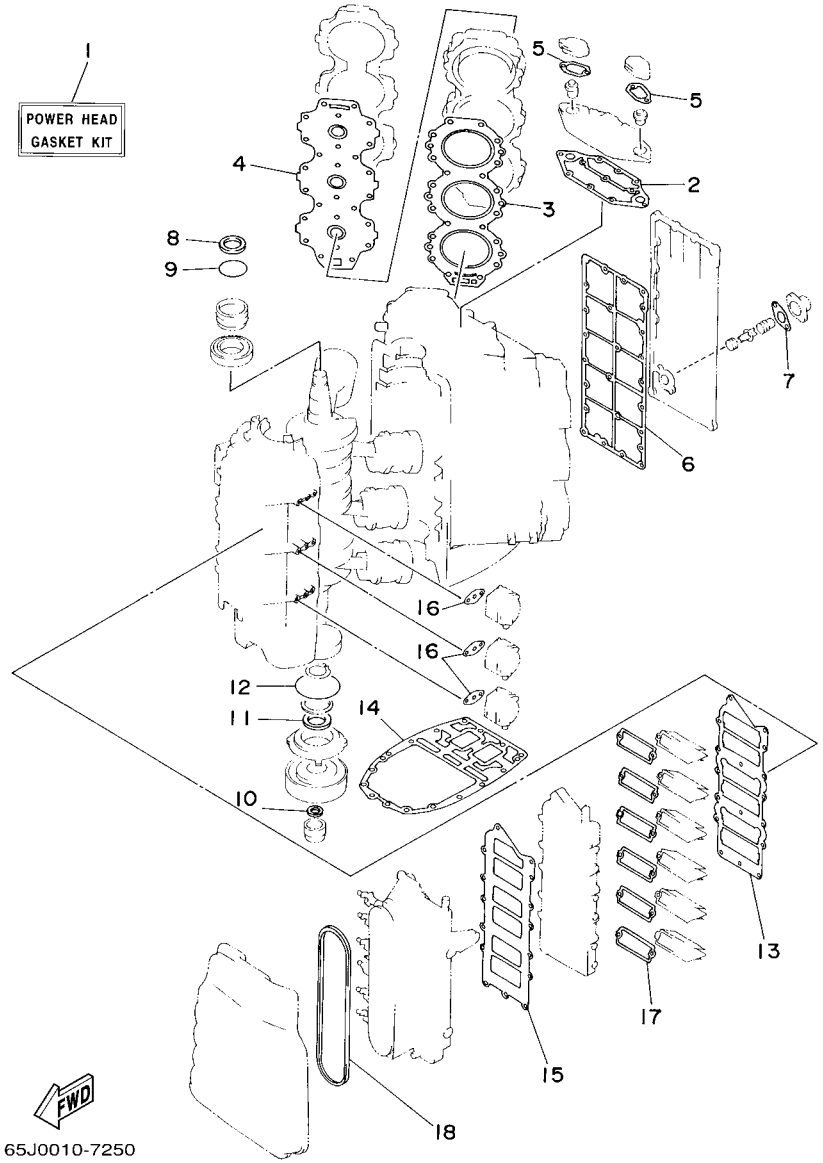

FIG. 37 REPAIR KIT 1 — ESTUCHE REPARATION 1

REF. NO.	PART NO. CODIGO Nº	DESCRIPTION DESCRIPCION	65J3	65L3	65K3	65M3		REMARKS OBSERVACIONES
1	65L–W0001–02	POWER HEAD GASKET KIT JUEGO DE EMPAQUE	1	1	1	1		
2	61A–11381–A0	.GASKET 1 .EMPAQUE 1	1	1	1	1		
3	69L–11181–00	.GASKET, CYLINDER HEAD 1 .JUNTA, DE CULATA 1	2	2	2	2		
4	61A–11193–A1	.GASKET, HEAD COVER 1 .EMPAQUE	2	2	2	2		
5	61A–12414–A0	.GASKET, COVER .EMPAQUE	2	2	2	2		
6	61A–41112–A1	.GASKET, EXHAUST INNER COVER .EMPAQUE	1	1	1	1		
7	6G5–11382–A1	.GASKET 2 .EMPAQUE 2	1	1	1	1		
8	93102–40M38	.OIL SEAL .SELLO ACEITE	1	1	1	1		
9	93210–54M54	.O-RING .ANILLO O	1	1	1	1		
10	93104–22M07	.OIL SEAL .SELLO ACEITE	1	1	1	1		
11	93102–40M36	.OIL SEAL .SELLO ACEITE	1	1	1	1		
12	93210–81MA6	.O-RING .ANILLO O	1	1	1	1		
13	65L–13645–00	.GASKET, MANIFOLD 1 .EMPAQUE	1	1	1	1		
14	61A–45113–A0	.GASKET, UPPER CASING .EMPAQUE	1	1	1	1		
15	65L–13646–00	.GASKET, MANIFOLD 2 .EMPAQ. DE MULTIPLE 2	1	1	1	1		
16	650–24431–A0	.GASKET, FUEL PUMP 1 .EMPAQUE BOMBA COMBUST 1	3	3	3	3		
17	61A–13621–A0	.GASKET, VALVE SEAT .JUNTA, DE VALV.DE EMPAQUE	6	6	6	6		
18	65L–14483–00	.GASKET .EMPAQUE	1	1	1	1		

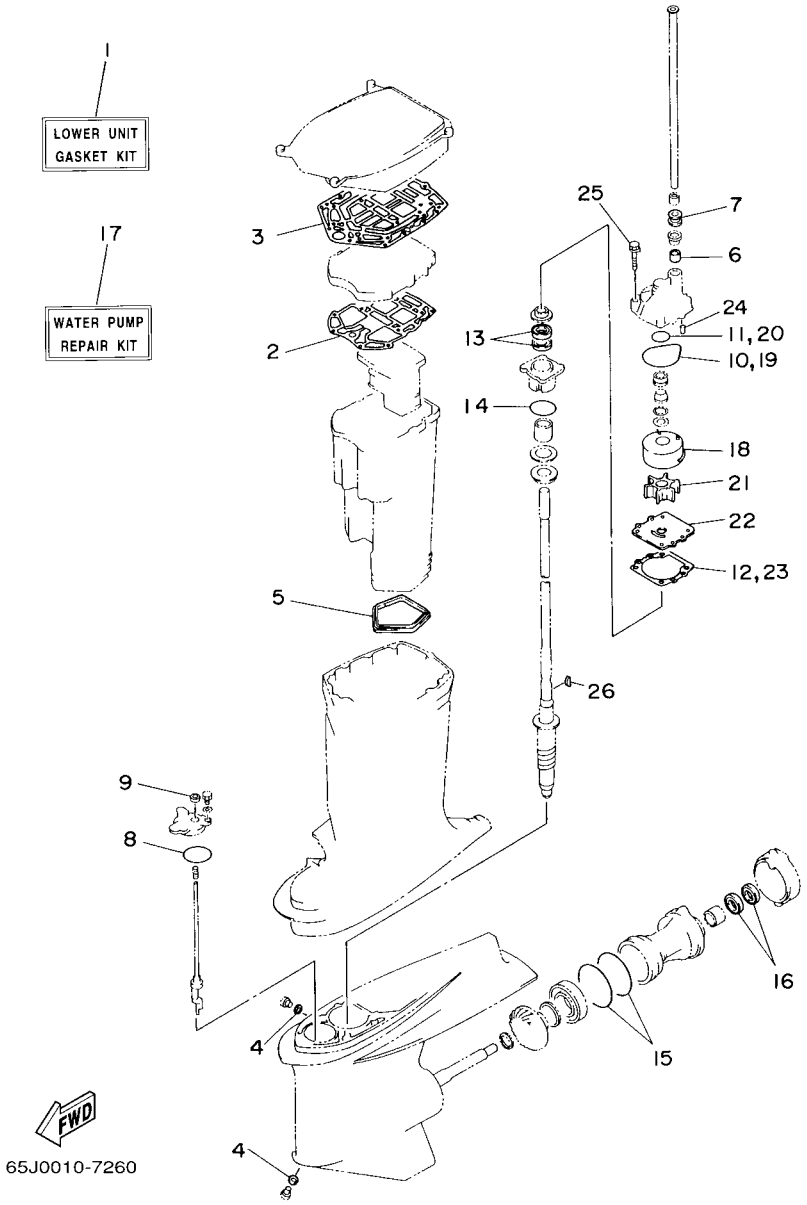

FIG. 38 REPAIR KIT 2 — ESTUCHE REPARATION 2

REF. NO.	PART NO. CODIGO Nº	DESCRIPTION DESCRIPCION	65J3	65L3	65K3	65M3		REMARKS OBSERVACIONES
1	65L–W0001–C0	LOWER UNIT GASKET KIT JUEGO DE JUNTA UNIDAD INFERIOR	1	1	1	1		
2	61A–41134–A0	.GASKET, EXHAUST MANIFOLD .EMPAQUE	1	1	1	1		
3	61A–45114–A0	.GASKET, UPPER CASING .EMPAQUE	1	1	1	1		
4	90430–08020	.GASKET .JUNTA	2	2	2	2		
5	61A–45123–01	.GASKET, MUFFLER .EMPAQUE SILENCIADOR	1	1	1	1		
6	6E5–44365–00	.DAMPER, WATER SEAL .HULE DE SELLO DE AGUA	1	1	1	1		
7	6E5–44366–00	.DAMPER, WATER SEAL .GOMA DEL SELLO DE AGUA	1	1	1	1		
8	93210–64488	.O-RING .ANILLO O	1	1	1	1		
9	93106–09014	.OIL SEAL .RETEN DE ACEITE	1	1	1	1		
10	93210–86M38	.O-RING .ANILLO O	1	1	1	1		
11	93210–37160	.O-RING .ANILLO O	1	1	1	1		
12	6E5–44315–A0	.GASKET, WATER PUMP .EMPAQUE	1	1	1	1		
13	93101–28M16	.OIL SEAL .SELLO ACEITE	2	2	2	2		
14	93210–55M14	.O-RING .ANILLO O	1	1	1	1		
15	93211–04384	.O-RING .ANILLO O	2	2	2	2		
16	93101–30M17	.OIL SEAL .SELLO ACEITE	2	2	2	2		
17	61A–W0078–A3	WATER PUMP REPAIR KIT ESTUCHE REPARACION BOMBA AGUA	1	1	1	1		
18	61A–44322–02	.INSERT, CARTRIDGE .CARTUCHO	1	1	1	1		
19	93210–86M38	.O-RING .ANILLO O	1	1	1	1		
20	93210–37160	.O-RING .ANILLO O	1	1	1	1		
21	6E5–44352–01	.IMPELLER .IMPULSOR	1	1	1	1		
22	6G5–44323–00	.OUTER PLATE, CARTRIDGE .PLACA EXTERIOR DEL CARTUCHO	1	1	1	1		
23	6E5–44315–A0	.GASKET, WATER PUMP .EMPAQUE	1	1	1	1		
24	93606–12019	.PIN, DOWEL .PASADOR DE CLAVIJA	2	2	2	2		
25	90119–08M14	.BOLT, WITH WASHER .TORNILLO CON ARANDELA	4	4	4	4		
26	90280–04M05	.KEY, WOODRUFF .CUNA WOODRUFF	1	1	1	1		

NUMERICAL INDEX
INDICE NUMERICO

PART NO. CODIGO Nº	REF. NO.
62J–11111–01–1S	4 – 1
6E5–11119–01	2 – 31
69L–11181–00	4 – 2
	37 – 3
61A–11191–00–1S	4 – 5
61A–11193–A1	4 – 6
	37 – 4
65L–1131N–00	15 – 49
62Y–11325–00	2 – 21
6J8–11325–00	4 – 8
6H3–11327–00–1S	4 – 10
66M–11327–00–94	2 – 23
66M–11328–00	2 – 22
6H3–11328–00	4 – 9
65L–11353–11	15 – 51
65L–11354–00	15 – 48
69L–11357–00	15 – 52
61A–11371–00–1S	2 – 33
6H1–11372–00	23 – 24
6G5–11372–00–1S	4 – 23
650–11372–01	2 – 8
6E5–11372–01	2 – 3
6F6–11372–01	2 – 7
	7 – 7
61A–11381–A0	2 – 35
	37 – 2
6G5–11382–A1	4 – 22
	37 – 7
69L–11395–00	15 – 42
65L–11396–00	15 – 50
69L–11397–00	15 – 44
6D0–11411–00	3 – 1
61A–11447–00	3 – 2
663–11518–01	2 – 10
61A–11536–00	3 – 8
61A–11537–00	8 – 16
60V–11555–00	3 – 12
61A–11586–01	3 – 11
64D–11603–01	3 – 21
64D–11604–01	3 – 21
64D–11605–01	3 – 21
69L–11631–00–85	3 – 20
61A–11633–02	3 – 24
61A–11634–00	3 – 25
69L–11635–00	3 – 20
69L–11636–00	3 – 20
69L–11642–00–85	3 – 22
69L–11645–00	3 – 22

PART NO. CODIGO Nº	REF. NO.
69L–11646–00	3 – 22
61A–11650–00	3 – 26
6E5–12411–30	2 – 37
61A–12413–21–1S	2 – 38
61A–12413–31–1S	2 – 39
61A–12414–A0	2 – 40
	37 – 5
6G5–12416–00	4 – 19
66M–12535–00	2 – 24
6R3–12572–00	18 – 53
61A–12576–00	4 – 25
6R3–12580–00	18 – 54
6G5–12581–00	2 – 20
61A–13117–00	8 – 18
65L–13183–00	8 – 8
67H–13183–00	5 – 52
65L–13200–00	8 – 1
61A–13411–00	9 – 5
6E5–13414–00	9 – 6
61A–13416–00	8 – 6
6E5–13437–62	9 – 43
6E5–13448–00	9 – 2
6R3–13471–00	8 – 3
6L2–13475–00	8 – 4
67H–13490–00	5 – 45
67H–13532–00	5 – 48
67H–13533–00	5 – 50
67H–13534–00	5 – 51
66K–13542–00	5 – 46
67H–13544–00	5 – 47
65L–13573–00	6 – 12
65J–13610–01	7 – 1
65L–13610–01	7 – 1
61A–13621–A0	7 – 3
	37 – 17
65L–13624–01–1S	7 – 6
65L–13645–00	7 – 11
	37 – 13
65L–13646–00	7 – 10
	37 – 15
67H–13751–00	6 – 1
65L–13761–00	6 – 14
65L–13764–00	6 – 16
65L–13766–00	6 – 17
65L–13769–00	6 – 15
66K–13781–00	5 – 21
66K–13843–00	5 – 30
66K–13844–00	5 – 22

PART NO. CODIGO Nº	REF. NO.
66K–13898–00	5 – 53
67H–13898–00	6 – 10
65L–13905–00	5 – 13
66K–13906–00	5 – 8
67H–13907–00	5 – 17
66K–13915–00	5 – 23
67H–13938–00	6 – 9
66K–13971–00	6 – 28
67H–13972–00	6 – 30
65L–13995–00	6 – 13
65L–13996–00	6 – 27
65L–14125–00	5 – 7
65L–14147–00	5 – 31
65L–14159–00	5 – 20
66K–14163–00	5 – 12
65L–1416A–00	5 – 24
67H–14182–00	5 – 2
65L–14194–00	5 – 19
67H–14225–00	5 – 54
65L–14227–00	5 – 18
66K–14239–00	5 – 10
66K–14245–00	5 – 16
66K–14255–00	5 – 9
66K–14271–00	5 – 25
65L–14274–00	5 – 32
6A0–14325–00	10 – 46
66K–14325–01	5 – 11
65L–14334–00	6 – 6
65L–14397–00	5 – 35
65L–14440–00	7 – 16
65L–14483–00	7 – 17
	37 – 18
624–14485–00	2 – 4
65L–14488–00	12 – 23
65L–14523–00	6 – 7
65L–14527–00	6 – 2
65L–14546–00	5 – 3
66K–14548–01	5 – 5
65L–14565–00	5 – 55
	6 – 3
65L–14573–00	6 – 25
65L–14578–00	6 – 8
65L–14579–00	6 – 26
6K5–14592–00	6 – 4
65L–14596–00	6 – 23
61A–14711–22–5B	23 – 32
6E5–14737–00	23 – 33
65L–14966–00	5 – 14

PART NO. CODIGO Nº	REF. NO.
66K–14980–00	5 – 1
66K–14984–00	5 – 6
66K–14985–00	5 – 4
65L–14992–00	5 – 36
65L–14997–00	5 – 37
65J–15100–03–1S	2 – 2
65L–15100–03–1S	2 – 2
61A–15315–00	19 – 58
61A–15359–00–94	3 – 14
6A0–15789–00	21 – 25
61A–21708–20	9 – 19
6E5–21733–20	9 – 20
6E5–21734–01–33	9 – 35
6E5–21746–00	9 – 37
61A–21750–00	9 – 1
6E5–21770–03	9 – 21
6E5–21798–01–33	9 – 36
65L–2415E–60	18 – 58
6YJ–24167–00	28 – 7
65L–24169–00	5 – 43
6YJ–24201–10	28 – 1
646–24251–02	9 – 24
6Y1–24260–12	28 – 3
6Y1–24268–00	28 – 6
6Y2–24305–05	28 – 13
6Y2–24306–44	28 – 8
6Y2–24307–50	11 – 1
61A–24311–00	10 – 55
65L–24311–00	10 – 51
68F–24311–00	10 – 8
61A–24313–00	10 – 5
6E5–24313–00	10 – 57
6E5–24315–00	10 – 31
6G5–24315–00	10 – 33
6G5–24316–10	10 – 53
6G5–24317–01	10 – 28
6E5–24319–01	9 – 25
6E5–24321–01	9 – 29
6E5–24322–00	9 – 22
6E5–24323–00	9 – 15
6Y1–24329–00	28 – 5
6E5–24351–51	11 – 3
	28 – 10
6Y2–24360–60	11 – 5
	28 – 12
65L–24375–00	5 – 38
66K–24376–00	5 – 33
6R3–24377–00	10 – 3

PART NO. CODIGO Nº	REF. NO.
650–24378–00	4 – 14
65L–24378–00	8 – 9
6E5–24378–00	10 – 30
6E5–24379–00	9 – 12
65L–24387–00	6 – 29
65L–24397–00	5 – 39
6E5–24410–03	10 – 36
6E5–24411–00	10 – 41
6E5–24412–10	10 – 48
6E5–24413–00	10 – 38
6A0–24421–01	10 – 45
6E5–24423–00	10 – 43
648–24424–00	10 – 42
650–24431–A0	10 – 49
	37 – 16
6E5–24434–02	10 – 44
6E5–24435–00	10 – 40
6E5–24444–00	10 – 37
65L–24461–00	5 – 49
61A–24469–00	10 – 16
6E5–24471–00	10 – 39
65L–24486–00	5 – 15
66K–24489–00	5 – 34
61A–24521–00	10 – 11
65L–24531–01	10 – 12
60H–24558–00	10 – 18
65L–24560–00	10 – 10
65L–24563–00	10 – 15
61A–24564–00	10 – 13
65L–24564–00	10 – 17
61A–24566–00	10 – 22
65L–24576–00	5 – 40
65L–24577–00	10 – 14
66K–24579–00	5 – 41
65L–24592–00	5 – 42
6YJ–24610–01	28 – 2
6A1–28176–00	18 – 59
61H–2819R–31	9 – 44
61A–41112–A1	4 – 15
	37 – 6
61A–41113–00–1S	4 – 13
61A–41131–01–5B	23 – 25
61A–41132–01–5B	23 – 28
61A–41134–A0	23 – 29
	38 – 2
61A–41137–14–94	23 – 18
65L–41213–00	19 – 16
65L–41217–00	6 – 32

PART NO. CODIGO Nº	REF. NO.
61A–41237–00	19 – 13
682–41237–00	19 – 15
6H1–41237–00	8 – 23
6R5–41237–00	8 – 20
65L–41241–10	8 – 21
65L–41632–01	19 – 6
69J–42510–00–8D	21 – 5
624–42542–00	9 – 9
	15 – 2
65L–42610–00–4D	1 – 1
65J–42610–T0–4D	1 – 1
65L–42610–T0–4D	1 – 1
61A–42613–01–4D	1 – 12
61A–42615–01	1 – 11
61A–42619–02	1 – 9
61A–42626–00	1 – 15
61A–42627–02	1 – 10
61A–42636–00	1 – 16
6R3–42647–00	1 – 2
6R3–42662–00	1 – 5
61A–42677–S1	1 – 25
61A–4267A–S1	1 – 26
61A–42681–S1	1 – 23
62J–42681–S1	1 – 23
61A–42682–S1	1 – 24
62J–42682–S1	1 – 24
65J–42683–S0	1 – 21
65L–42683–S0	1 – 21
65L–42686–00	1 – 19
65J–42686–T0	1 – 19
65L–42686–T0	1 – 19
65J–42687–S0	1 – 20
65L–42687–S0	1 – 20
65L–42687–V0	1 – 20
61A–42711–05–8D	18 – 1
61A–42716–00	18 – 39
61A–42717–00	18 – 40
61A–42724–00	19 – 59
61A–42725–12	18 – 24
6H4–42726–00	18 – 38
688–42726–10	18 – 37
61A–42727–00	18 – 41
61A–42738–02–5B	18 – 26
64D–42738–10–5B	18 – 27
61A–42741–01–8D	18 – 42
6E5–42761–00–1S	2 – 42
61A–42771–01–8D	18 – 43
6K7–42791–00	18 – 57

NUMERICAL INDEX
INDICE NUMERICO

PART NO. CODIGO Nº	REF. NO.
61A–42791–S0	23 – 2
61A–42792–S0	23 – 3
6R3–42811–01	18 – 9
6R3–42811–10	18 – 13
6R3–42813–00	18 – 16
6R3–42814–00	1 – 6
61A–42815–01–8D	18 – 3
6R3–42816–00	18 – 10
6R3–42824–00	18 – 8
6N7–42828–00	18 – 19
6R3–42828–00	18 – 20
61A–42850–01	18 – 12
6R3–42850–10	18 – 11
61A–42850–20	18 – 14
61A–43111–23–8D	20 – 1
61A–43112–23–8D	20 – 14
6E5–43126–02	20 – 40
6R3–43131–00	20 – 19
61A–43132–00	20 – 12
61A–43133–00	20 – 15
6G5–43144–00	20 – 31
6E5–43145–01	29 – 8
6G5–43148–10	20 – 36
61A–43181–01	20 – 33
6G5–43185–02	20 – 34
61A–43311–21–8D	20 – 27
61A–43376–00	21 – 3
61A–43800–25–4D	22 – 1
6T4–43802–03	22 – 54
61A–43804–01	22 – 87
61A–43805–01	22 – 88
61A–43806–00	22 – 84
61A–43807–00	22 – 79
61A–43810–00	22 – 3
61A–43813–01	22 – 12
6H1–43814–00	22 – 11
6H1–43816–00	22 – 53
6H1–43817–00	22 – 18
61A–43818–00	22 – 16
61A–43820–10	22 – 66
61A–43821–00	22 – 63
61A–43822–00	22 – 62
61A–43828–00	22 – 21
6H1–43829–00	22 – 59
61A–4382A–00	22 – 75
61A–4382K–00	22 – 46
6T4–43830–00	22 – 45
6H1–43831–00	22 – 44

PART NO. CODIGO Nº	REF. NO.
61A–43833–01	22 – 15
61A–43835–01	22 – 14
61A–4383H–11	22 – 70
61A–43840–01	22 – 2
6T4–43841–00	22 – 57
6T4–43844–00	22 – 48
61A–43845–00	22 – 34
61A–43847–00	22 – 37
61A–43848–00	22 – 32
6T4–43849–00	22 – 41
6H1–4384F–00	22 – 43
6T4–4384G–00	22 – 49
61A–4384H–10	22 – 71
61A–4384J–00	22 – 28
61A–4384K–00	22 – 27
61A–4384L–00	22 – 23
6T4–43851–00	22 – 24
61A–43854–00	22 – 33
6T4–43855–00	22 – 50
6H1–43856–10	22 – 47
61A–4385H–00	22 – 42
61A–43861–00	22 – 4
6H1–43861–00	22 – 7
61A–43864–00	22 – 68
6H1–43866–00	22 – 55
6H1–43867–00	22 – 56
6H1–43869–00	22 – 22
6T4–4386J–00	22 – 77
61A–4386K–00	22 – 85
61A–43871–00	22 – 5
6H1–43872–00	22 – 8
61A–43874–00	22 – 67
61A–43875–00	22 – 31
6H1–43875–00	22 – 35
6T4–43875–01	22 – 61
61A–43875–10	22 – 69
61A–43876–00	22 – 72
6T4–43876–00	22 – 38
61A–43878–00	22 – 60
61A–43880–02	22 – 76
61A–43881–01	22 – 91
61A–43881–11	22 – 92
61A–43884–01	22 – 81
6T4–43885–00	22 – 80
61A–43887–00	22 – 89
61A–43891–00	22 – 86
6T4–43893–00	22 – 73
6T4–43895–00	22 – 51

PART NO. CODIGO Nº	REF. NO.
61A–4389H–00	22 – 9
61A–44112–00	19 – 50
61A–44116–00	19 – 44
682–44117–00	18 – 15
61A–44117–01–1S	19 – 22
61A–44118–00–8D	19 – 42
61A–44120–22	19 – 48
61A–44121–00	19 – 36
6E5–44122–00	19 – 37
61A–44138–00	19 – 60
60V–44150–00	24 – 15
60W–44150–00	26 – 17
61A–44176–00–1S	19 – 25
61A–44311–01	24 – 18
	26 – 20
6E5–44312–00	24 – 23
	26 – 25
6E5–44315–A0	24 – 31
	26 – 33
	38 – 12
61A–44322–02	24 – 19
	26 – 21
	38 – 18
6G5–44323–00	24 – 30
	26 – 32
	38 – 22
6E5–44352–01	24 – 24
	26 – 26
	38 – 21
61A–44361–20	25 – 2
	27 – 2
6E5–44365–00	24 – 22
	25 – 3
	26 – 24
	27 – 3
	38 – 6
663–44366–00	24 – 6
	26 – 8
6E5–44366–00	25 – 1
	27 – 1
	38 – 7
6E5–44391–00	18 – 23
61A–44511–00–94	21 – 33
61A–44514–00–94	21 – 26
6G5–44526–00	20 – 3
68F–44533–00	2 – 44
61A–44551–01–8D	21 – 10
61A–44552–01–94	21 – 21

PART NO. CODIGO Nº	REF. NO.
61A–44553–00–8D	21 – 24
61A–44555–01–94	21 – 13
61A–44575–00	21 – 12
61A–45111–22–8D	23 – 1
61A–45113–A0	23 – 20
	37 – 14
61A–45114–A0	23 – 17
	38 – 3
663–45119–00	20 – 18
61A–45123–01	23 – 35
	38 – 5
61A–45155–00	23 – 4
61A–45214–10	25 – 10
	27 – 10
61A–45215–10	25 – 11
	27 – 11
6G5–45251–02	20 – 2
65J–45300–21–8D	24 – 1
65K–45300–21–8D	26 – 1
61A–45301–10–8D	24 – 2
	26 – 2
6E5–45318–00	23 – 15
61A–45321–01	24 – 11
	26 – 13
61A–45331–00–94	24 – 34
	26 – 36
61B–45332–01–94	26 – 64
61A–45332–02–94	24 – 60
688–45341–10	24 – 8
	26 – 10
6E5–45344–00	24 – 40
	26 – 42
61A–45361–01–5B	24 – 70
	26 – 79
61A–45371–00	25 – 14
	27 – 14
61A–45375–00	25 – 9
	27 – 9
61A–45376–00–94	24 – 10
	26 – 12
61A–45378–00	23 – 9
61B–45383–00	26 – 73
61B–45384–00	26 – 72
61A–45501–20	24 – 43
	26 – 45
61A–45527–00	24 – 27
	26 – 29
61A–45538–00	24 – 26

PART NO. CODIGO Nº	REF. NO.
61A–45538–00	26 – 28
61B–45538–01	26 – 4
61A–45551–03	24 – 44
	26 – 46
61B–45560–01	26 – 49
61A–45560–03	24 – 47
61A–45567–00–10	24 – 5
	26 – 7
61A–45567–00–12	24 – 5
	26 – 7
61A–45567–00–15	24 – 5
	26 – 7
61A–45567–00–18	24 – 5
	26 – 7
61A–45567–00–30	24 – 5
	26 – 7
61A–45567–00–40	24 – 5
	26 – 7
61A–45567–00–50	24 – 5
	26 – 7
61B–45570–03	26 – 66
61A–45571–00	24 – 62
61A–45577–00–10	24 – 64
	26 – 68
61A–45577–00–12	24 – 64
	26 – 68
61A–45577–00–15	24 – 64
	26 – 68
61A–45577–00–18	24 – 64
	26 – 68
61A–45577–00–30	24 – 64
	26 – 68
61A–45577–00–40	24 – 64
	26 – 68
61A–45577–00–50	24 – 64
	26 – 68
6K1–45578–01–10	26 – 70
6K1–45578–01–12	26 – 70
6K1–45578–01–15	26 – 70
6K1–45578–01–18	26 – 70
6K1–45578–01–30	26 – 70
6K1–45578–01–40	26 – 70
6K1–45578–01–50	26 – 70
61A–45587–00–10	24 – 37
	26 – 39
61A–45587–00–12	24 – 37
	26 – 39
61A–45587–00–15	24 – 37

PART NO. CODIGO Nº	REF. NO.
61A–45587–00–15	26 – 39
61A–45587–00–18	24 – 37
	26 – 39
61A–45587–00–30	24 – 37
	26 – 39
61A–45587–00–40	24 – 37
	26 – 39
61A–45587–00–50	24 – 37
	26 – 39
69J–45611–00	24 – 48
61B–45611–01	26 – 50
61B–45611–20	26 – 52
61A–45631–03	24 – 52
	26 – 56
61A–45632–00	24 – 51
	26 – 55
61A–45633–00	24 – 53
	26 – 57
61A–45634–01	24 – 50
	26 – 54
61A–45635–00	24 – 55
	26 – 59
61B–45641–01	26 – 53
61A–45641–02	24 – 49
6H1–45668–00	24 – 54
	26 – 58
6K1–45970–01–98	27 – 21
6G5–45970–02–98	25 – 21
61A–45972–00–98	25 – 21
6K1–45972–01–98	27 – 21
6G5–45972–02–98	25 – 21
61A–45974–00–98	25 – 21
61B–45974–00–98	27 – 21
6K1–45974–02–98	27 – 21
6G5–45974–03–98	25 – 21
66K–45974–B0	25 – 21
61A–45978–00–98	25 – 21
61B–45978–00–98	27 – 21
6K1–45978–02–98	27 – 21
6G5–45978–03–98	25 – 21
6E5–45987–01	25 – 16
	27 – 16
688–45997–01	25 – 17
	27 – 17
704–48119–20	33 – 78
EL8–48127–00	33 – 25
704–48128–00	33 – 71
6A5–48129–10	33 – 12

PART NO. CODIGO Nº	REF. NO.
704–48144–00	33 – 57
703–48152–00	32 – 57
703–48153–00	32 – 3
EL8–48153–10	33 – 63
704–48156–00	33 – 72
EL8–48158–00	33 – 31
EL8–48164–00	33 – 46
704–48166–00	33 – 64
704–48176–10	33 – 58
704–48178–00	33 – 76
703–48189–00	32 – 17
EL8–48191–00	33 – 18
703–48192–00	33 – 59
704–48192–00	33 – 49
704–48193–00	33 – 54
703–48198–00	32 – 14
703–48205–A4	31 – 1
	32 – 1
703–48207–17	31 – 1
	32 – 1
704–48207–23	31 – 2
	33 – 1
703–48211–01	32 – 61
703–48212–00	32 – 58
703–48213–00	32 – 59
703–48215–00	32 – 43
704–48215–10	33 – 14
703–48218–00	32 – 64
703–48219–00	32 – 30
704–48219–00	33 – 56
703–48221–00	32 – 56
704–48221–00	33 – 77
703–48222–00	32 – 27
704–48222–00	33 – 36
703–48223–00	32 – 28
703–48225–00	32 – 29
704–48225–00	33 – 48
703–48226–00	32 – 26
703–48227–00	32 – 24
704–48228–00	33 – 38
704–48228–10	33 – 70
704–48229–00	33 – 40
704–48229–10	33 – 68
EL8–48231–00	33 – 27
703–48232–00	32 – 62
EL8–48232–00	33 – 45
EL8–48233–00	33 – 60
703–48234–00	32 – 18

PART NO. CODIGO Nº	REF. NO.
EL8–48234–00	33 – 55
703–48235–00	32 – 4
	33 – 61
703–48236–00	32 – 16
703–48238–00	32 – 22
	33 – 44
EL8–48241–00	33 – 28
704–48242–00	33 – 47
703–48243–00	32 – 15
703–48244–00	32 – 21
EL8–48244–00	33 – 34
703–48245–00	32 – 11
EL8–48245–00	33 – 35
701–48246–00	33 – 5
703–48246–00	32 – 23
701–48248–00	32 – 13
	33 – 43
EL8–48251–00	33 – 3
703–48252–00	32 – 12
EL8–48254–00	33 – 29
EL8–48259–00	33 – 7
704–48261–00	33 – 17
703–48261–01	32 – 2
704–48262–00	33 – 8
702–48263–00	33 – 52
703–48264–00	32 – 6
704–48264–00	33 – 9
703–48265–00	32 – 9
704–48265–00	33 – 4
704–48266–00	33 – 10
703–48268–00	32 – 5
703–48271–00	32 – 60
EL8–48271–00	33 – 24
EL8–48279–00	33 – 53
703–48281–00	32 – 31
704–48281–00	33 – 15
EL8–48281–00	33 – 13
703–48282–00	32 – 32
704–48282–00	33 – 62
704–48283–00	33 – 19
703–48284–00	32 – 52
704–48284–00	33 – 65
703–48284–10	32 – 52
704–48285–00	33 – 74
704–48286–00	33 – 75
701–48287–00	32 – 42
704–48287–00	33 – 22
703–48291–10	32 – 39

PART NO. CODIGO Nº	REF. NO.
703–48293–10	32 – 41
701–48320–40	31 – 3
701–48320–80	31 – 3
6E5–48344–00	19 – 7
703–48345–01	32 – 19
	33 – 21
703–48358–00	32 – 20
	33 – 26
65L–48531–00	19 – 1
663–48538–00	19 – 2
6E5–61301–01	30 – 1
6E5–61303–00	30 – 5
6E5–61311–11	30 – 3
6E5–61313–00	30 – 2
6E5–61315–00	30 – 4
6E5–61350–02	29 – 1
6E5–61351–01	29 – 2
6E5–61355–00	29 – 5
6E5–81332–00	12 – 14
61A–81337–01	12 – 17
65L–81338–00–1S	12 – 18
69L–81800–00	17 – 1
6K7–81801–10	17 – 7
61A–81807–00	17 – 10
61A–81809–00	17 – 4
6K7–81810–00	17 – 5
6E5–81813–10	17 – 8
61A–81820–00	17 – 9
61A–81822–00–94	17 – 19
61A–81824–00	17 – 3
6K7–81826–10	17 – 13
65L–8182A–00	5 – 26
6E5–8182A–10	17 – 16
65L–8182E–00	5 – 28
6E5–8182E–10	17 – 14
65L–8182F–00	5 – 29
6E5–8182F–10	17 – 15
6K7–8182G–10	17 – 18
65L–8182K–00	5 – 27
6E5–8182K–10	17 – 17
61A–81830–00	17 – 12
61A–81840–00	17 – 6
61A–81850–01	17 – 2
61H–81857–00	17 – 11
6E5–81900–01	9 – 27
65L–81915–00–94	14 – 8
65L–81916–00	14 – 12
61A–81919–00	15 – 57

PART NO. CODIGO Nº	REF. NO.
65L–81919–00	15 – 56
6E5–81922–00	9 – 28
61A–81941–00	15 – 14
65L–81942–00	15 – 29
65L–81948–00	15 – 1
61A–81949–00	15 – 12
61A–81949–10	15 – 11
61A–81950–00	15 – 7
704–81950–00	33 – 66
65L–81950–01	15 – 34
61A–81952–00	15 – 15
61A–81960–02	15 – 20
69J–81972–01–1S	15 – 22
69J–81975–A0	15 – 21
6K1–81980–00	35 – 18
61A–82105–00	14 – 28
61A–82117–00	15 – 33
6Y5–82117–00	34 – 17
6G5–82119–00	15 – 13
61A–82147–20	20 – 30
6E5–82148–00	20 – 9
6H1–82148–00	20 – 6
6E5–82149–00	21 – 16
61A–82150–00	15 – 17
1E6–82151–00	34 – 16
61A–82151–00	15 – 18
705–82151–00	14 – 19
61A–82153–00	15 – 19
61A–82154–01	15 – 31
61A–82176–00	15 – 32
6A0–82317–00	9 – 8
	15 – 3
663–82317–01	12 – 22
6E3–82370–21	14 – 4
67H–82380–00	15 – 36
67H–82507–00	5 – 44
61B–82510–01	36 – 4
6K1–82510–06	35 – 3
703–82510–12	32 – 44
703–82510–43	32 – 44
61A–82519–00	13 – 21
6G0–82519–00	13 – 22
6R3–82521–70	34 – 18
6R3–82521–80	34 – 18
61A–8252U–00	16 – 9
61A–82531–00	14 – 15
703–82531–00	32 – 46
	34 – 29

PART NO. CODIGO Nº	REF. NO.
6K1–82532–00	35 – 5
703–82540–00	32 – 50
704–82540–10	33 – 11
703–82542–00	32 – 63
61B–82551–01	36 – 3
6R3–82553–30	34 – 20
6R3–82553–70	34 – 19
68F–82553–80	34 – 19
6R3–82553–80	34 – 19
68F–82553–90	34 – 19
682–82556–00	32 – 48
	35 – 7
	36 – 7
61A–82560–10	16 – 8
61A–82563–00	14 – 31
703–82563–02	32 – 55
703–82563–12	32 – 55
704–82563–31	33 – 39
704–82563–E0	33 – 69
704–82563–F0	33 – 73
61B–82570–02	36 – 1
6K1–82570–07	35 – 1
6K1–82571–01	35 – 2
6K1–82575–00	35 – 6
	36 – 6
688–82575–01	32 – 47
676–82577–00	32 – 45
	36 – 5
703–82577–00	32 – 45
	35 – 4
6E3–8257H–00	18 – 60
6E5–82587–00	14 – 32
6E5–82588–00	18 – 49
61A–82588–01	19 – 33
61B–82588–01	36 – 2
61B–8258A–01	35 – 20
	36 – 19
688–8258A–20	32 – 49
6K1–8258A–40	35 – 19
	36 – 18
65L–82590–10	14 – 18
704–82590–10	33 – 67
703–82591–00	32 – 53
703–82592–00	32 – 54
688–82594–00	18 – 52
6E5–82594–00	18 – 48
703–82594–00	32 – 25
704–82594–00	33 – 37

PART NO. CODIGO Nº	REF. NO.
6R3–8259E–00	9 – 11
61A–8259F–00	19 – 32
65L–8259M–00	14 – 23
65L–8259N–01	14 – 24
6R5–83383–00	36 – 12
703–83383–02	32 – 51
688–83383–11	35 – 12
703–83383–A0	32 – 51
6Y5–83500–S5	34 – 6
6Y5–8350F–00	34 – 23
6Y5–8350T–03	34 – 1
6Y5–83533–T2	34 – 10
6Y5–83553–00	34 – 15
6Y5–83553–F1	34 – 25
6Y5–83553–M0	34 – 15
65L–83557–00	10 – 60
6Y5–83557–00	34 – 21
6Y5–83557–10	34 – 21
6Y5–83557–31	34 – 11
6E9–83557–70	10 – 59
6E5–83558–00	23 – 13
6Y5–83570–S5	34 – 7
61A–83614–00	14 – 33
6K1–83614–01	35 – 8
	36 – 8
6K1–83623–41	12 – 25
65L–83625–40	14 – 35
	15 – 58
6A1–83625–41	12 – 24
61A–83672–02	21 – 1
61A–83721–00	12 – 4
6Y5–83728–00	34 – 12
65L–85370–00	14 – 5
65L–85510–10	12 – 2
61A–85525–00	13 – 11
61A–85537–00	13 – 19
65J–85540–02	13 – 7
65L–85540–02	13 – 7
61A–85542–01–94	13 – 1
61A–85548–00	13 – 10
61A–85550–01	12 – 1
61A–85570–00	14 – 1
61A–85580–01	12 – 3
6E5–85711–40	9 – 42
6E5–85720–05	9 – 33
6R3–85721–80	9 – 34
61A–85730–01	9 – 4
6Y5–85752–01	34 – 26

NUMERICAL INDEX
INDICE NUMERICO

PART NO. CODIGO Nº	REF. NO.
61A–85780–00	16 – 1
61A–85790–00	16 – 2
61B–85830–00	36 – 13
6K1–85830–01	35 – 13
65L–85832–00	15 – 47
61A–85885–00	6 – 18
65L–85886–00	15 – 38
6K7–85886–00	6 – 19
61A–85895–00	16 – 5
65L–8592A–01	15 – 41
6Y5–87122–S0	34 – 14
61A–87149–00	15 – 6
65L–W0001–02	37 – 1
65L–W0001–C0	38 – 1
65J–W0004–01	7 – 2
61A–W0070–S1	1 – 22
65L–W0070–V0	1 – 22
61A–W0078–A3	38 – 17
65J–W0090–14–1S	2 – 1
65L–W0090–14–1S	2 – 1
656–W2810–02	9 – 45
90101–09M70	30 – 9
90101–12M05	20 – 44
90105–06028	7 – 9
90105–08M48	24 – 68
	26 – 77
90105–10M00	25 – 15
	27 – 15
90105–10M62	2 – 13
90105–10M75	2 – 14
90109–06M40	8 – 5
90109–06M50	18 – 7
90109–09001	3 – 27
90109–14M10	21 – 30
90109–14M48	21 – 17
90119–06089	2 – 15
90119–06M10	24 – 14
	26 – 16
90119–06M17	23 – 10
90119–06M28	13 – 4
90119–06M65	9 – 10
	14 – 9
	15 – 4
90119–06M74	15 – 45
90119–06MA2	2 – 36
	4 – 24
90119–06MA3	4 – 16
90119–06MA5	2 – 41

PART NO. CODIGO Nº	REF. NO.
90119–06MA5	4 – 7
90119–08M14	24 – 33
	26 – 35
	38 – 25
90119–08M22	18 – 36
90119–08M74	23 – 36
90119–08M76	17 – 20
90119–08M77	17 – 21
90119–08M78	23 – 8
90119–08M79	23 – 21
90119–08M99	4 – 4
90119–08MA3	2 – 32
90119–08MA5	4 – 3
90119–10MA2	25 – 8
	27 – 8
90149–05M05	35 – 21
	36 – 20
90152–05003	25 – 12
	27 – 12
90157–05107	22 – 78
90158–06002	34 – 27
90159–06M03	13 – 20
	14 – 13
90159–06M16	7 – 19
90169–05M00	15 – 30
	18 – 2
90170–09M05	30 – 10
90170–12M36	15 – 39
90170–14M06	30 – 6
90170–16M19	24 – 46
	26 – 48
90170–24M22	12 – 12
90171–18M04	25 – 19
	27 – 19
90179–06M24	1 – 14
	7 – 15
90183–02M03	24 – 57
	26 – 61
90183–05M02	23 – 34
90185–05002	25 – 13
	27 – 13
90185–09M01	29 – 6
	30 – 11
90185–14M00	21 – 31
90185–22M11	20 – 22
90201–02M00	24 – 56
	26 – 60
90201–05552	6 – 5

PART NO. CODIGO Nº	REF. NO.
90201–06068	10 – 21
90201–06M30	18 – 6
90201–06M31	19 – 17
90201–08M54	18 – 34
90201–09M01	8 – 17
90201–09M02	19 – 57
90201–10M20	29 – 7
90201–10M76	30 – 8
90201–12M05	20 – 46
90201–12M34	15 – 40
90201–13M01	20 – 45
90201–15M58	21 – 18
90201–16M00	24 – 45
	26 – 47
90201–16M01	21 – 27
90201–16M55	21 – 15
90201–22M01	24 – 28
	26 – 30
90201–25M02	12 – 13
90201–26M03	3 – 29
90201–26M59	20 – 21
90201–28M01	21 – 29
90201–29M01	26 – 51
90201–31M00	24 – 63
90201–40M00	21 – 6
90202–05088	8 – 25
90202–06007	19 – 41
90202–08M20	19 – 38
90202–28M46	21 – 28
90202–32M19	21 – 14
90202–40M47	21 – 9
90206–10M04	19 – 19
90206–12M00	19 – 11
90206–13M10	18 – 5
90206–14086	22 – 82
90206–22M19	24 – 29
	26 – 31
90280–04M05	24 – 25
	26 – 27
	38 – 26
90280–05015	12 – 11
90340–08002	24 – 7
	26 – 9
90340–14M00	2 – 29
90383–16M01	2 – 6
90384–06M07	2 – 5
90385–04M05	1 – 13
90386–10M16	20 – 35

PART NO. CODIGO Nº	REF. NO.
90386–12069	19 – 27
90386–13M88	18 – 4
90386–18M14	20 – 42
	22 – 17
90386–18M63	20 – 41
90386–25M31	20 – 20
90386–39M89	21 – 7
90386–90M90	19 – 55
90387–05M00	6 – 21
90387–06M03	13 – 3
90387–06M29	19 – 18
90387–06M60	14 – 10
90387–08M09	19 – 28
90387–08M16	19 – 12
90387–08M37	18 – 33
90387–10M02	20 – 37
90387–10M61	29 – 3
90430–08020	24 – 9
	26 – 11
	38 – 4
90430–14115	2 – 30
90445–05M07	9 – 7
90445–07M02	8 – 13
90445–07M03	7 – 8
	8 – 14
90445–07M11	2 – 12
90445–07M40	2 – 17
90445–07M44	2 – 16
	7 – 18
90445–07MA6	2 – 18
90445–07MF0	23 – 12
90445–09220	8 – 10
90445–09224	15 – 27
90445–09M25	4 – 17
90445–11M26	9 – 31
90445–11M36	18 – 55
90445–12M04	9 – 13
90445–13M01	11 – 2
	28 – 9
90445–13M14	10 – 54
90445–13M17	10 – 2
90445–13M35	28 – 11
90446–09M69	8 – 11
90450–10M07	11 – 6
90464–04M12	6 – 33
90464–09M47	16 – 7
90464–12M48	16 – 4
90464–13M34	9 – 18

PART NO. CODIGO Nº	REF. NO.
90464–13M34	10 – 4
90464–15M11	13 – 17
90464–18M46	12 – 21
	15 – 10
90464–19M45	14 – 14
90465–05M87	14 – 21
90465–06M86	2 – 34
	17 – 26
90465–08M89	14 – 20
90465–11M10	8 – 7
	9 – 14
	10 – 1
	14 – 25
	18 – 56
	20 – 23
	23 – 14
	34 – 13
90465–11M52	13 – 18
	14 – 26
90465–13M11	9 – 3
90465–13M18	4 – 26
	14 – 27
	15 – 46
90465–13M30	18 – 25
90467–08004	4 – 18
	15 – 28
90468–07M02	8 – 15
90468–18008	19 – 8
90480–06M19	11 – 4
90480–09M12	13 – 2
90480–10M23	6 – 22
	14 – 11
90480–20M05	4 – 21
90480–22M81	18 – 32
90501–10M77	24 – 58
	26 – 62
90501–11M10	24 – 17
	26 – 19
90501–16M11	4 – 20
90506–20011	20 – 39
90508–20M31	19 – 31
90560–12M01	29 – 4
91490–12012	8 – 24
91490–20012	19 – 56
91490–40030	25 – 20
	27 – 20
91609–10014	22 – 64
91690–30010	19 – 3

PART NO. CODIGO Nº	REF. NO.
91690–30020	20 – 38
92780–06020	33 – 30
92901–04100	22 – 20
92901–05100	22 – 26
92903–06100	12 – 6
	19 – 52
92903–06600	2 – 28
	4 – 12
	7 – 13
	12 – 7
	13 – 6
	14 – 3
	15 – 9
	19 – 21
92990–04100	34 – 4
92990–04600	1 – 17
92990–05100	35 – 10
	36 – 10
92990–05300	33 – 41
92990–05600	7 – 5
	35 – 23
	36 – 22
92990–06100	1 – 3
	35 – 16
	36 – 16
92990–06300	33 – 51
92990–06600	9 – 39
	35 – 17
	36 – 17
92990–08200	19 – 10
92990–08600	32 – 34
92990–10600	16 – 3
92990–18200	25 – 18
	27 – 18
92995–04100	19 – 35
92995–05100	12 – 9
92995–05600	2 – 26
	12 – 10
	14 – 7
92995–06100	3 – 19
	10 – 20
	13 – 13
	15 – 54
	19 – 46
92995–06600	1 – 8
	10 – 24
	12 – 16
	13 – 14

NUMERICAL INDEX
INDICE NUMERICO

PART NO. CODIGO Nº	REF. NO.
92995–06600	14 – 17
	15 – 55
	17 – 25
	18 – 18
	19 – 24
	20 – 5
	23 – 6
92995–08100	19 – 5
92995–08200	19 – 30
92995–08600	17 – 23
	23 – 23
	24 – 42
	26 – 44
92995–10100	20 – 25
	25 – 6
	27 – 6
92995–10600	20 – 26
	21 – 23
	25 – 7
	27 – 7
92995–14600	21 – 20
93101–28M16	24 – 35
	26 – 37
	38 – 13
93101–30M17	24 – 66
	26 – 75
	38 – 16
93102–08414	22 – 94
93102–40M36	3 – 15
	37 – 11
93102–40M38	3 – 4
	37 – 8
93104–22M07	3 – 13
	37 – 10
93106–09014	24 – 13
	26 – 15
	38 – 9
93106–19N50	22 – 6
93210–06001	22 – 40
93210–064A5	22 – 29
93210–07003	22 – 39
93210–08287	28 – 14
93210–09165	19 – 49
	22 – 58
93210–10M74	22 – 52
93210–16275	29 – 9
93210–17003	15 – 43
93210–18397	22 – 36

PART NO. CODIGO Nº	REF. NO.
93210–18MA9	8 – 19
93210–19M82	8 – 2
93210–35321	21 – 8
93210–37160	24 – 21
	26 – 23
	38 – 11
93210–54M54	3 – 5
	37 – 9
93210–55M14	24 – 39
	26 – 41
	38 – 14
93210–64488	24 – 12
	26 – 14
	38 – 8
93210–72789	22 – 90
93210–81MA6	3 – 17
	37 – 12
93210–86M38	24 – 20
	26 – 22
	38 – 10
93211–04384	24 – 67
	26 – 76
	38 – 15
93300–60820	22 – 83
93306–209U1	3 – 6
93306–210U0	24 – 61
93306–308U0	3 – 9
93310–326V4	3 – 28
93310–840V8	3 – 30
93310–959U0	3 – 7
93311–83280	24 – 3
	26 – 3
93311–940V0	3 – 3
93315–43061	26 – 67
93315–440V6	26 – 71
93315–660W3	26 – 5
93317–330U2	24 – 36
	26 – 38
93317–330U5	24 – 65
	26 – 74
93332–000W1	24 – 4
93332–000W2	26 – 65
93341–440U5	26 – 69
93341–670V0	26 – 6
93341–930U9	24 – 38
	26 – 40
93410–18M02	20 – 43
93410–37M04	21 – 11

PART NO. CODIGO Nº	REF. NO.
93410–40M03	3 – 10
93420–36M01	23 – 16
93420–61M07	3 – 16
93430–06024	32 – 10
	33 – 6
93501–04011	24 – 59
	26 – 63
93501–08001	22 – 74
93505–32038	22 – 30
93606–12019	23 – 11
	24 – 32
	26 – 34
	38 – 24
93608–12063	2 – 11
93608–12M05	23 – 7
	25 – 4
	27 – 4
93700–06M01	19 – 26
93700–06M03	19 – 43
	20 – 17
93700–09M00	24 – 69
	26 – 78
94702–00309	4 – 27
95313–08600	19 – 54
95380–03600	10 – 47
95380–04600	34 – 5
95380–05600	8 – 22
	19 – 14
	32 – 7
	33 – 23
	35 – 11
	36 – 11
95380–06600	1 – 4
	9 – 40
	32 – 40
	33 – 42
	35 – 15
	36 – 15
95380–12600	20 – 47
95380–14700	30 – 7
95380–14800	21 – 19
95670–06655	7 – 14
95780–10300	21 – 4
97013–06012	19 – 51
97013–06014	13 – 15
	15 – 5
97013–06016	4 – 11
	13 – 5

PART NO. CODIGO Nº	REF. NO.
97013–06020	2 – 27
	14 – 2
97013–06025	12 – 19
	13 – 8
	15 – 23
97013–06030	15 – 8
	19 – 20
97013–06035	12 – 5
97013–06060	7 – 12
97013–08045	19 – 9
97075–08035	18 – 35
97080–06012	16 – 10
97080–06100	9 – 38
97095–05012	2 – 25
97095–06010	18 – 21
	20 – 7
	23 – 5
97095–06012	1 – 7
	13 – 23
	14 – 16
	17 – 24
	18 – 30
97095–06014	10 – 23
97095–06016	10 – 19
	13 – 12
	18 – 17
	19 – 23
97095–06020	3 – 18
	18 – 46
97095–06025	20 – 4
97095–06030	15 – 53
	18 – 44
	19 – 45
97095–08016	17 – 22
97095–08020	19 – 4
	24 – 71
	26 – 80
97095–08025	24 – 41
	26 – 43
97095–08035	19 – 29
	23 – 22
97095–08050	23 – 30
97095–10045	20 – 24
	21 – 22
	25 – 5
	27 – 5
97380–05025	32 – 8
97380–06018	33 – 20

PART NO. CODIGO Nº	REF. NO.
97380–08030	32 – 33
97595–06420	22 – 13
97595–06550	10 – 50
97780–40520	1 – 18
97780–50612	15 – 16
97780–60625	15 – 35
97880–05016	7 – 4
97885–04016	19 – 34
97885–05010	14 – 6
97885–05012	16 – 6
97885–05030	12 – 8
97885–06008	19 – 61
97885–06010	12 – 15
	20 – 13
97885–06012	20 – 10
97885–06016	21 – 2
97890–05016	33 – 2
97890–05025	33 – 16
97890–06018	33 – 50
97985–05212	6 – 20
97985–05330	6 – 24
98501–04030	22 – 19
98501–05010	22 – 25
98580–03015	32 – 38
98580–04006	32 – 36
	33 – 32
98580–04010	32 – 35
98580–05010	32 – 37
98586–05016	28 – 4
98780–05018	33 – 33
98980–05010	35 – 9
	36 – 9
98980–06020	35 – 14
	36 – 14
99001–08600	24 – 16
	26 – 18
9E450–04433	34 – 2
9E450–04533	34 – 3

PART NO. CODIGO Nº	REF. NO.

225F/250B
L225F/L250B
PARTS CATALOGUE
©2003 by Yamaha Motor Co., Ltd.
1st edition, August 2003
All rights reserved.
Any reprinting or unauthorized use
without the written permission of
Yamaha Motor Co., Ltd.
is expressly prohibited.
Printed in Japan.

225F/250B
L225F/L250B
CATALOGO DE REPUESTOS
©2003 por Yamaha Motor Co., Ltd.
1ª edición, agosto 2003
Todos los derechos reservados.
Toda reproducción o uso no autorizado
sin el consentimiento escrito de
Yamaha Motor Co., Ltd.
quedan expresamente prohibidos
Impreso en Japón.