YAMAHA

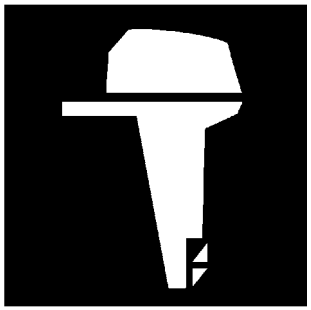

PARTS CATALOGUE
CATALOGO DE REPUESTOS

250GETO'07 (6S33)
L250GETO'07 (6S43)

1F6S3-200S1

(2F6S3-200S1)

YAMAHA GENUINE Parts & Accessories

A1

250GETO/L250GETO
PARTS CATALOGUE
©2006 by Yamaha Motor Co., Ltd.
1st edition, September 2006
All rights reserved.
Any reprinting or unauthorized use
without the written permission of
Yamaha Motor Co., Ltd.
is expressly prohibited.
Printed in Japan.

250GETO/L250GETO
CATALOGO DE REPUESTOS
©2006 por Yamaha Motor Co., Ltd.
1ª edición, septiembre 2006
Todos los derechos reservados.
Toda reproducción o uso no autorizado
sin el consentimiento escrito de
Yamaha Motor Co., Ltd.
quedan expresamente prohibidos
Impreso en Japón.

FOREWORD

This Parts Catalogue is related to the parts for the model(s) on the cover page. When you are ordering replacement parts, please refer to this Parts Catalogue and quote both part numbers and part names correctly.

1. Modifications or additions which have been made after the issue of the Parts Catalogue will be announced in the Parts News.
   It is advisable that you make the necessary corrections to the Parts Catalogue according to the Parts News.

2. Abbreviations
   The following abbreviations are used in this Parts Catalogue.

   "UR" Use specified parts number.
   "UN" Use as many as needed.
   "AP" Alternate Parts
   "LM" Locally Made (Parts need to be ordered locally)
   "F#" Frame No. (Applicable machine No.)
   "O/S" Over Size

3. The number of components for assembly
   - Parts, which are to be supplied in an assembly, are listed with a dot (.) in front of the part name as shown below.
   - The numeral appearing to the right of each component part indicates the quantity of parts for each assembly unit.

PART NO.	DESCRIPTION	Q'TY	REMARKS
2F5–83310–60	FRONT FLASHER LIGHT ASSY	2	
115–83311–60	.BULB (6V–18W)	1	

4. Applicable colours of graphics are represented in the "REMARKS" as shown below.

PART NO.	DESCRIPTION	Q'TY	REMARKS
2N4–24110–00–X5	FUEL TANK COMP.	2	MXR
3J1–24240–10	.GRAPHIC, FUEL TANK	1	FOR MXR

5. Note that the illustrations for reference in finding parts numbers are not to be used for assembling. When assembling, please use the applicable service manual.

6. The asterisk (*) before a reference number indicates modified items after the first edition.

7. Applicable Serial No.

   Engine Serial No.

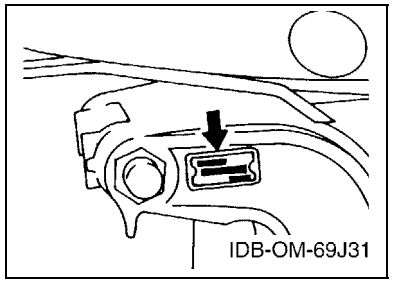

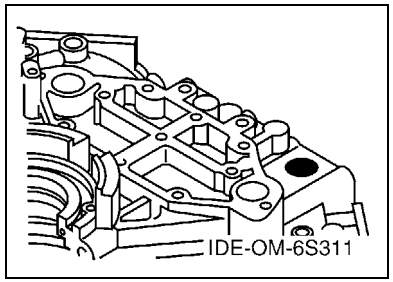

8. Applicable Engine Starting Serial No.

Model	Serial No.	Model	Serial No.
250G	6S3-1000410	L250G	6S4-1000282

9. Applicable Colour Code

Abbreviation	Colour Name	Colour Code
DBN1	DARK BLUISH GRAY 1	008D

10. Quantity Column Information

Column No.	Name Of Q'ty Column	Applicable Model
1	6S33	250GETO
2	6S43	L250GETO

PROLOGO

Este catálogo de repuestos corresponde a las piezas para el o los modelos que figuran en la página de portada. Al formular el pedido de repuestos, se ruega citar este catálogo y especificar correctamente el número y el nombre de las piezas.

1. Las modificaciones y agregados que se hayan realizado después de la edición de este Catálogo de Repuestos, serán anunciados en las Informaciones de Recambios.
   Es recomendable que se hagan las correcciones necesarias en el Catálogo de Repuestos de acuerdo con las Informaciones de Recambios.

2. Abreviaciones
   En este. Catálogo de Repuestos se emplean las siguientes abreviaciones.

   "UR" Usar el número de partes especificado
   "UN" Usar la cantidad necesaria
   "AP" Piezas sustitutivas
   "LM" Fabricación local (Hay que pedir los repuestos en las cercanías)
   "F#" Nº de bastidor (Nº aplicable a la máquina)
   "O/S" Sobredimensionado

3. La cantidad de componentes para el montaje
   - Los componentes, suministrados como conjunto, se describen con un punto (.) que precede al nombre del parte como se indica a continuación.
   - La numeración que aparece a la derecha de cada descripción indica la cantidad de partes por cada unidad de conjunto.

CODIGO Nº	DESCRIPCION	CANT.	OBSERVACIONES
2F5–83310–60	ENSAMBLAJE DE LA LUZ	2	
115–83311–60	.BOMBILLA (6V–18W)	1	

4. Los colores de los componentes se indican como sigue en la columna de "OBSERVACIONES".

CODIGO Nº	DESCRIPCION	CANT.	OBSERVACIONES
2N4–24110–00–X5	COMP. DEL TANQUE	2	MXR
3J1–24240–10	.GRAFICO, DEL TANQUE	1	PARA MXR

5. Debe tenerse en cuenta que las ilustraciones sirven como guia para la búsqueda de los números de partes y no deben usarse para el montaje. Durante el montaje, se recomienda usar el manual de taller correspondiente.

6. EL asterisco (*) antes del número de referencia indica los elementos modificados después de la primera edición.

7. Números de serie

   Nº de Serie del motor

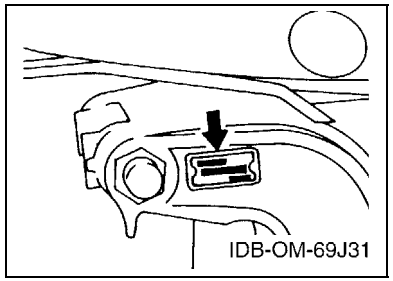

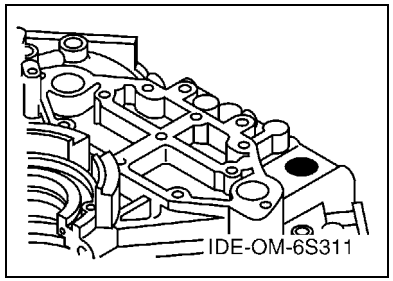

8. Números de serie del motor

Modelo	Nº de serie	Modelo	Nº de serie
250G	6S3-1000410	L250G	6S4-1000282

9. Códigos de color aplicables

Abreviatura	Nombre de color	Código de color
DBN1	DARK BLUISH GRAY 1	008D

10. Informacion para la columna de cantidades

Columna Nº	Nombre de la columna de cantidades	Modelo aplicable
1	6S33	250GETO
2	6S43	L250GETO

CONTENTS

SHEET1/2
TOP COWLING A4
CYLINDER & CRANKCASE 1 ..... A5
CRANKSHAFT & PISTON A7
CYLINDER & CRANKCASE 2 ..... B2
INTAKE B3
CARBURETOR B5
OIL PUMP B7
OIL TANK C1
FUEL 1 ..... C3
FUEL 2 ..... C5
GENERATOR C6
ELECTRICAL 1 ..... C7
ELECTRICAL 2 ..... D1
ELECTRICAL 3 ..... D2
ELECTRICAL 4 ..... D4
STARTING MOTOR D6
BOTTOM COWLING D7
CONTROL E3
BRACKET 1 ..... E6
BRACKET 2 ..... F1
POWER TRIM & TILT ASSY F3
UPPER CASING F7

INDEX

NUMERICAL INDEX G1

SHEET2/2
UPPER CASING A4*
LOWER CASING & DRIVE 1 ..... A5*
LOWER CASING & DRIVE 2 ..... B2*
LOWER CASING & DRIVE 3 ..... B4*
LOWER CASING & DRIVE 4 ..... C1*
FUEL TANK C3*
STEERING GUIDE ATTACHMENT 1 ..... C4*
STEERING GUIDE ATTACHMENT 2 ..... C5*
REMOTE CONTROL BOX C6*
REMOTE CONTROL ASSY 1 ..... C7*
REMOTE CONTROL ASSY 2 ..... D3*
METER D6*
SWITCH & PANEL D7*
REPAIR KIT 1 ..... E1*
REPAIR KIT 2 ..... E2*
REPAIR KIT 3 ..... E3*

INDEX

NUMERICAL INDEX G1*

CONTENIDO

PAGINA1/2
SOPORTE SUPERIOR A4
CILINDRO & CARTER 1 ..... A5
CIGUENAL & PISTON A7
CILINDRO & CARTER 2 ..... B2
ADMISION B3
CARBURADOR B5
BOMBA DE ACEITE B7
COMPONER Y PODER VARILLA C1
COMBUSTIBLE 1 ..... C3
COMBUSTIBLE 2 ..... C5
GENERADOR C6
EQUIPO ELECTRICO 1 ..... C7
EQUIPO ELECTRICO 2 ..... D1
EQUIPO ELECTRICO 3 ..... D2
EQUIPO ELECTRICO 4 ..... D4
MOTOR DE ARRANQUE D6
CUBIERTA INFERIOR D7
CONTROL E3
SOPORTE 1 ..... E6
SOPORTE 2 ..... F1
COMPONER Y PODER VARILLA F3
FUNDA SUPERIOR F7

INDICE

INDICE NUMERICO G1

PAGINA2/2
FUNDA SUPERIOR A4*
IMPULSOR E INFERIOR 1 ..... A5*
IMPULSOR E INFERIOR 2 ..... B2*
IMPULSOR E INFERIOR 3 ..... B4*
IMPULSOR E INFERIOR 4 ..... C1*
DEPOSITO DE COMBUSTIBLE C3*
ADITAMENTO GUIA DE GOBIERNO 1 ..... C4*
ADITAMENTO GUIA DE GOBIERNO 2 ..... C5*
CONTROL REMOTO COMPLETO C6*
CONTROL REMOTO COMPL 1 ..... C7*
CONTROL REMOTO COMPL 2 ..... D3*
MEDIDOR D6*
PANEL DE INTERRUPTOR D7*
ESTUCHE REPARATION 1 ..... E1*
ESTUCHE REPARATION 2 ..... E2*
ESTUCHE REPARATION 3 ..... E3*

INDICE

INDICE NUMERICO G1*

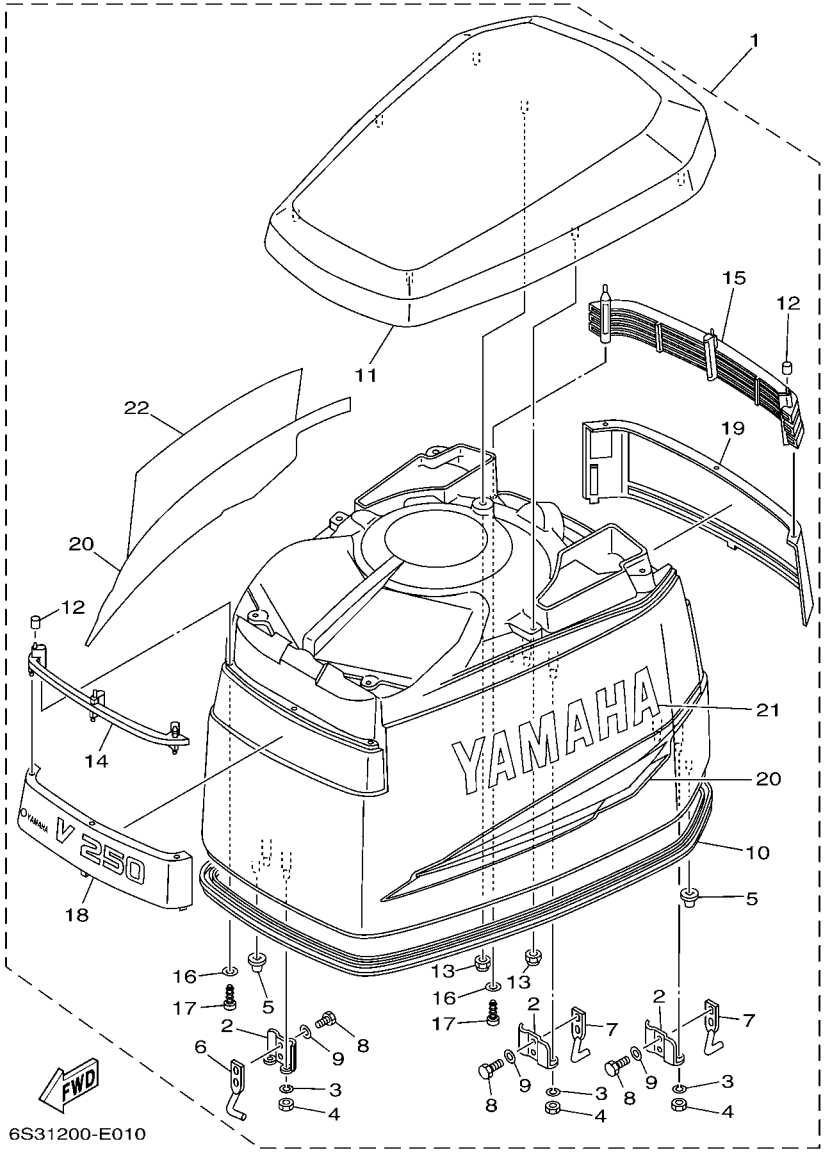

FIG. 1 TOP COWLING — SOPORTE SUPERIOR

REF. NO.	PART NO. CODIGO Nº	DESCRIPTION DESCRIPCION	6S33	6S43				REMARKS OBSERVACIONES
1	6S3–42610–00–8D	TOP COWLING ASSY SOPORTE SUPERIOR COMPL.	1	1				
2	6R3–42647–00	.HOLDER, CLAMP BAND .MORDAZA DE ABRAZADERA	3	3				
3	92990–06100	.WASHER, SPRING .ARANDELA PLANA	6	6				
4	95380–06600	.NUT, HEXAGON .TUERCA	6	6				
5	6R3–42662–00	.DAMPER .AMORTIGUADOR	3	3				
6	6S3–42651–00	.HOOK .GANCHO	1	1				
7	6S3–42652–00	.HOOK .GANCHO	2	2				
8	97095–06012	.BOLT .PERNO	6	6				
9	92995–06600	.WASHER .ARANDELA	6	6				
10	61A–42615–01	.SEAL .SELLO	1	1				
11	61A–42613–01–4D	.MOLDING, AIR DUCT .MOLDURA CONDUCTO AIRE	1	1				
12	90385–04M05	.BUSH .BUJE	6	6				
13	90179–06M24	.NUT .TUERCA	7	7				
14	61A–42626–00	.LOUVER, 1 .AMORTIGUADOR 1	1	1				
15	61A–42636–00	.LOUVER 2 .REJILLA 2	1	1				
16	92990–04600	.WASHER, PLATE .ARANDELA PLANA	6	6				
17	97780–40520	.SCREW, TAPPING .TORNILLO DE CABEZA DE CONO AC	6	6				
18	6S3–42686–00	.EMBLEM, FRONT .EMBLEMA DEL FRENTE	1	1				
19	6S3–42687–00	.EMBLEM, REAR .EMBLEMA TRASERO	1	1				
20	61A–W0070–30	.GRAPHIC SET .JUEGO DE EMBLEMA	1	1				
21	61A–42681–30	.MARK, COWLING .MARCA DE CUBIERTA	1	1				
22	61A–42682–30	.MARK, COWLING .MARCA DE CUBIERTA	1	1				

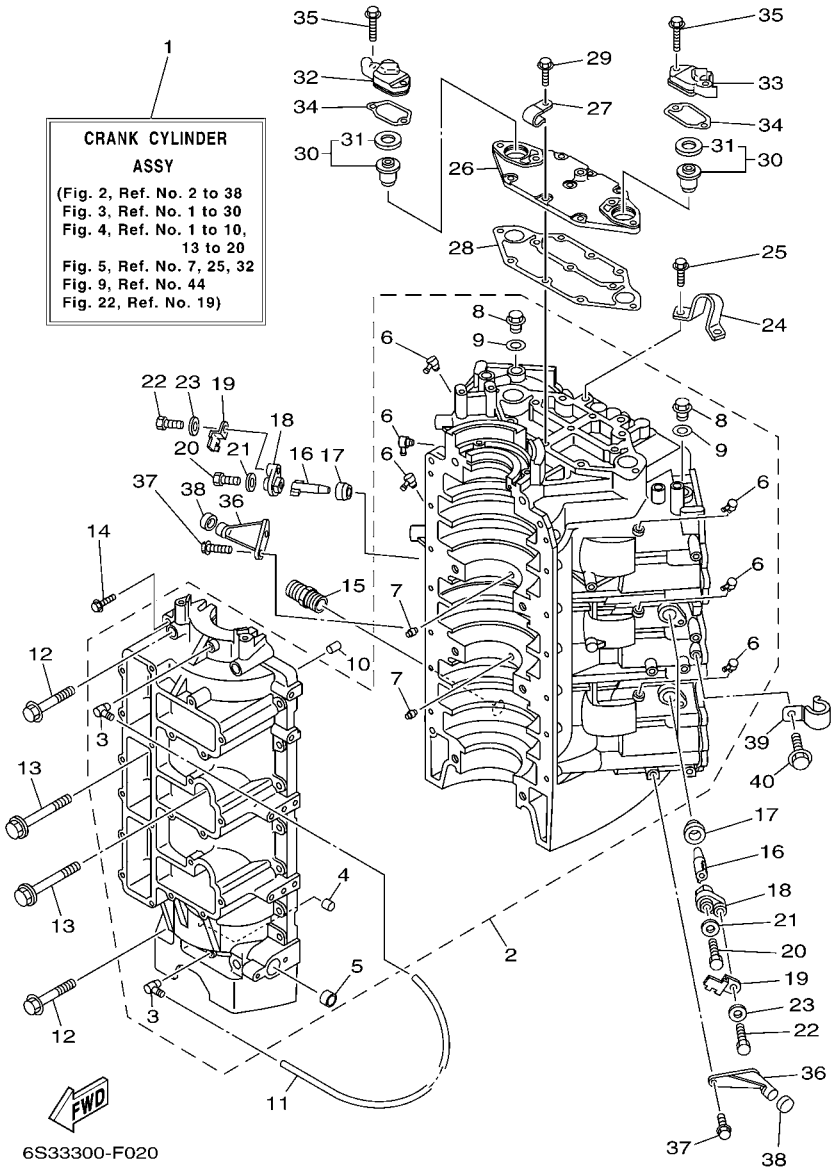

FIG. 2 CYLINDER & CRANKCASE 1 CILINDRO & CARTER 1

REF. NO.	PART NO. CODIGO Nº	DESCRIPTION DESCRIPCION	6S33	6S43				REMARKS OBSERVACIONES
1	6S3–W0090–01–1S	CRANK CYLINDER ASSY BLOQUE MOTOR COMPLETO	1	1				
2	6S3–15100–01–1S	CRANKCASE ASSY CARTER COMPLETO	1	1				
3	6E5–11372–01	.NIPPLE, HOSE .NIPLE DE MANGUERA	2	2				
4	90384–06M07	.BUSH, BIMETAL FORMED .BUJE BIMETALICO	1	1				
5	90383–16M01	.BUSH, FORMED .BUJE	1	1				
6	6E5–11372–01	.NIPPLE, HOSE .NIPLE DE MANGUERA	6	6				
7	663–11518–01	.LOCK, BEARING .SEGURO BALERO	2	2				
8	90340–14M00	.PLUG, STRAIGHT SCREW .TORNILLO, DE DRENAJE	2	2				
9	90430–14115	.GASKET .JUNTA	2	2				
10	93608–12063	PIN, DOWEL PASADOR DE CLAVIJA	2	2				
11	90445–07M10	HOSE (L510) TUBO (L510)	1	1				
12	90105–10M62	BOLT, FLANGE TORNILLO	4	4				
13	90105–10M75	BOLT, FLANGE TORNILLO	4	4				
14	90119–06089	BOLT, WITH WASHER TORNILLO CON ARANDELA	14	14				
15	6G5–12581–00	JOINT, HOSE 1 CONEXION	1	1				
16	62Y–11325–00	ANODE ANODO	3	3				
17	66M–11328–00	GROMMET, ANODE TAPON	3	3				
18	66M–11327–00–94	COVER, ANODE CUBIERTA DE ANODO	3	3				
19	66M–12535–00	PLATE EMPAQUETADURA	3	3				
20	97095–05012	BOLT PERNO	3	3				
21	92995–05600	WASHER ARANDELA	3	3				
22	97013–06020	BOLT PERNO	3	3				
23	92903–06600	WASHER, PLATE RONDANA SENCILLA	3	3				
24	6E5–11119–01	HANGER, ENGINE SOPORTE DEL MOTOR	1	1				
25	90119–08MA3	BOLT, WITH WASHER TORNILLO CON ARANDELA	2	2				
26	61A–11371–00–1S	COVER CUBIERTA 1	1	1				
27	90465–06M86	CLAMP BRIDA	2	2				

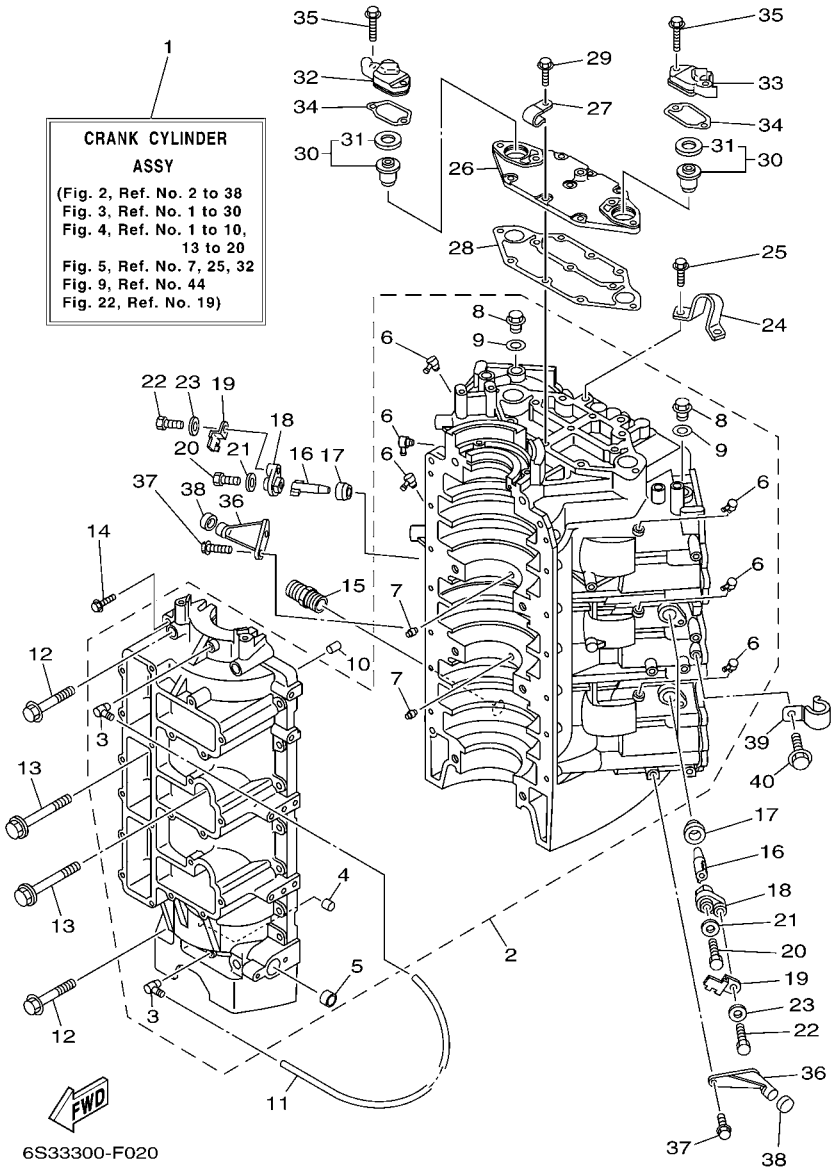

FIG. 2 CYLINDER & CRANKCASE 1 CILINDRO & CARTER 1

REF. NO.	PART NO. CODIGO Nº	DESCRIPTION DESCRIPCION	6S33	6S43				REMARKS OBSERVACIONES
28	61A–11381–A0	GASKET 1 EMPAQUE 1	1	1				
29	90119–06MA2	BOLT, WITH WASHER TORNILLO CON ARANDELA	7	7				
30	6E5–12411–30	THERMOSTAT TERMOSTAT	2	2				
31	688–12412–00	.SEAL, THERMOSTAT .SELLO TERMOSTATO	1	1				
32	6S3–12413–21–1S	COVER, THERMOSTAT CUBIERTA TERMOSTATO	1	1				
33	6S3–12413–31–1S	COVER, THERMOSTAT CUBIERTA TERMOSTATO	1	1				
34	61A–12414–A0	GASKET, COVER EMPAQUE	2	2				
35	90119–06MA5	BOLT, WITH WASHER TORNILLO CON ARANDELA	4	4				
36	6E5–42761–00–1S	STOPPER RETEN 1	2	2				
37	90119–06MA2	BOLT, WITH WASHER TORNILLO CON ARANDELA	4	4				
38	68F–44533–00	DAMPER, UPPER MOUNT RUBBER AMORTIGUADOR SUPERIOR	2	2				
39	90462–08019	CLAMP BRIDA	1	1				
40	97595–06512	BOLT, WITH WASHER PERNO CON ARANDELA	1	1				

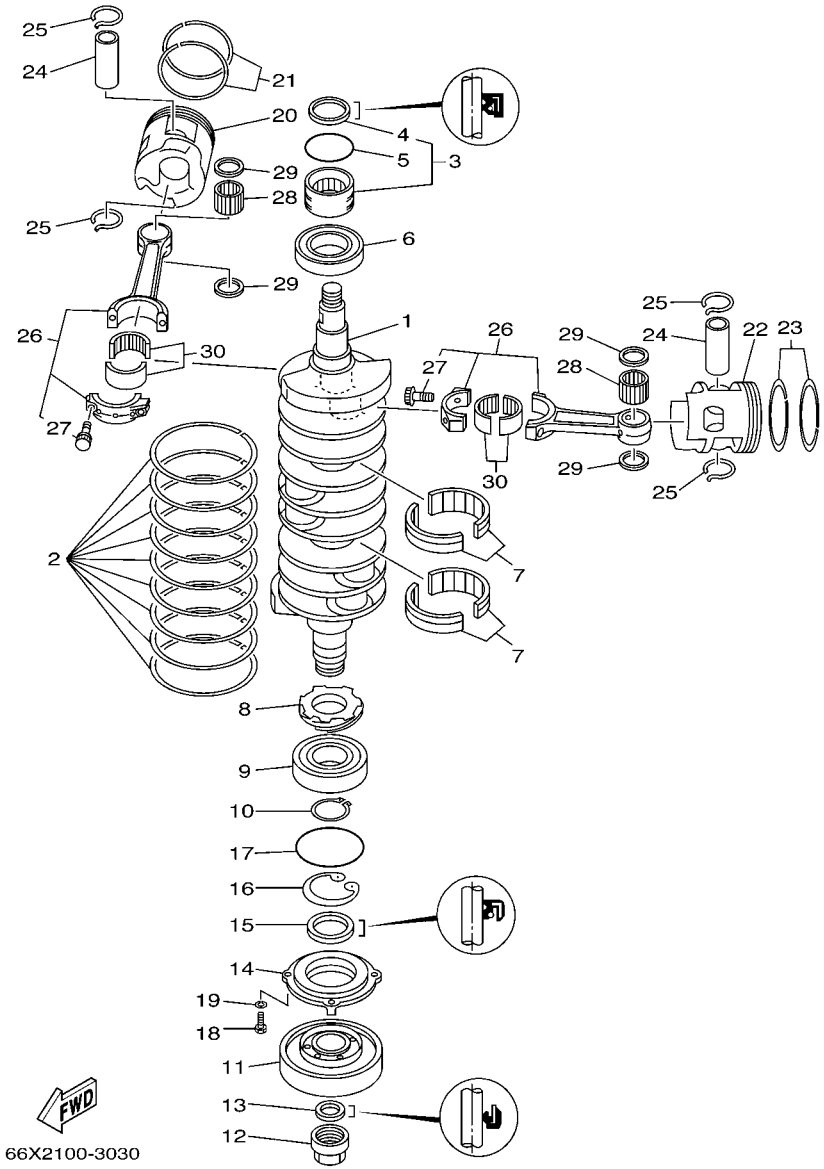

FIG. 3 CRANKSHAFT & PISTON — CIGUENAL & PISTON

REF. NO.	PART NO. CODIGO Nº	DESCRIPTION DESCRIPCION	6S33	6S43				REMARKS OBSERVACIONES
1	6D0–11411–00	CRANKSHAFT CIGUENAL	1	1				
2	61A–11447–00	SEAL, CRANK SELLO MANIVELA	9	9				
3	93311–940V0	BEARING COJINETE DE RODILLOS	1	1				
4	93102–40M38	.OIL SEAL .SELLO ACEITE	1	1				
5	93210–54M54	O-RING ANILLO O	1	1				
6	93306–209U1	BEARING COJINETE	1	1				
7	93310–959U0	BEARING COJINETE DE RODILLOS	2	2				
8	61A–11536–00	GEAR, DRIVE ENGRANAJE TRACCION	1	1				
9	93306–308U0	BEARING COJINETE	1	1				
10	93410–40M03	CIRCLIP SEGURO	1	1				
11	61A–11586–01	PULLEY, CRANKSHAFT BALANCE POLEA EQUILIBR. DE CIGUENAL	1	1				
12	60V–11555–00	NUT, CRANKSHAFT 1 TUERCA CIGUENAL 1	1	1				
13	93104–22M07	OIL SEAL SELLO ACEITE	1	1				
14	61A–15359–00–94	HOUSING, OIL SEAL CAJA DE SELLO DE ACEITE	1	1				
15	93102–40004	OIL SEAL SELLO ACEITE	1	1				
16	93420–61M07	CIRCLIP SEGURO	1	1				
17	93210–81MA6	O-RING ANILLO O	1	1				
18	97095–06020	BOLT PERNO	4	4				
19	92995–06100	WASHER, SPRING ARANDELA	4	4				
20	69L–11631–00–85	PISTON (STD) PISTON (NORMA)	3	3				
	69L–11635–00	PISTON (0.25MM O/S) PISTON (0.25MM O/S)	3	3				AP AP
	69L–11636–00	PISTON (0.50MM O/S) PISTON (0.50MM O/S)	3	3				AP AP
21	64D–11603–02	PISTON RING SET (STD) JUEGO DE ANILLOS (NORMA)	3	3				
	64D–11604–02	PISTON RING SET (0.25MM O/S) JUEGO DE ANILLOS (0.25MM O/S)	3	3				AP AP
	64D–11605–02	PISTON RING SET (0.50MM O/S) JUEGO DE ANILLOS (0.50MM O/S)	3	3				AP AP
22	69L–11642–00–85	PISTON 2 (STD) PISTON 2 (NORMA)	3	3				
	69L–11645–00	PISTON 2 (0.25MM O/S) PISTON 2 (0.25MM O/S)	3	3				AP AP

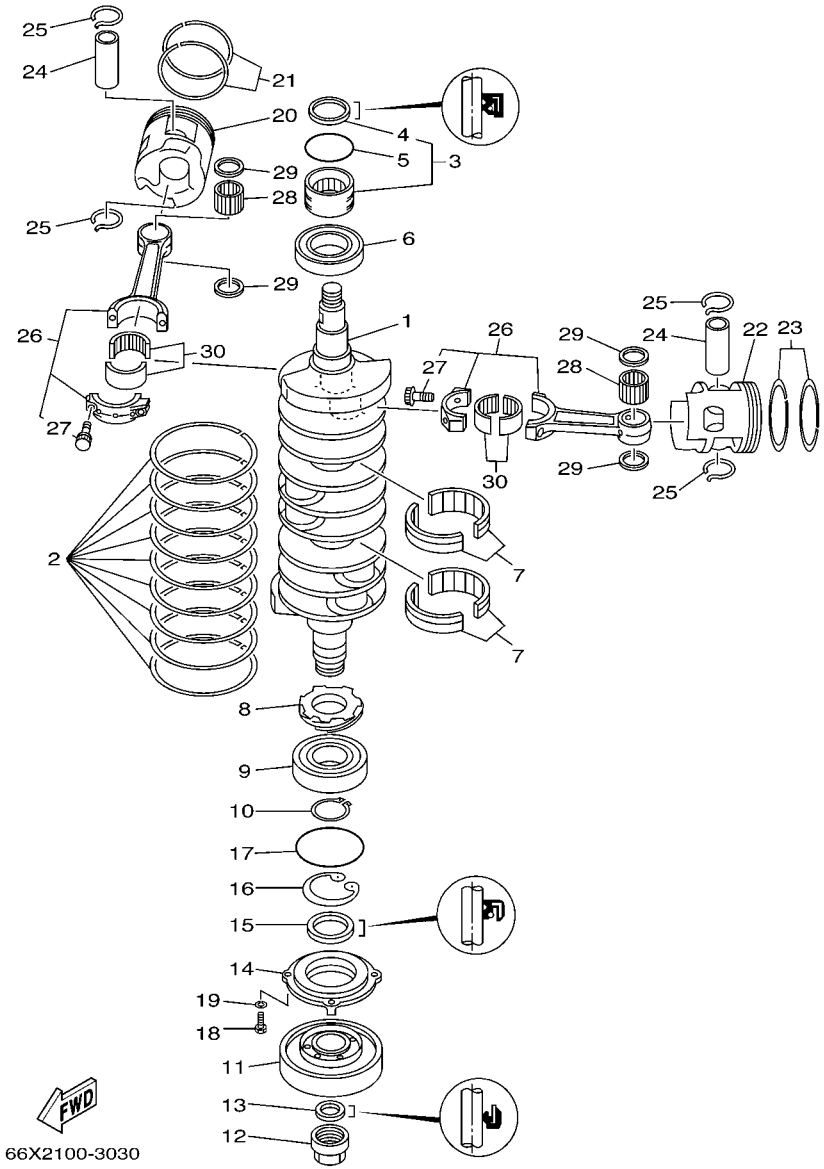

FIG. 3 CRANKSHAFT & PISTON — CIGUENAL & PISTON

REF. NO.	PART NO. CODIGO Nº	DESCRIPTION DESCRIPCION	6S33	6S43				REMARKS OBSERVACIONES
22	69L–11646–00	PISTON 2 (0.50MM O/S) PISTON 2 (0.50MM O/S)	3	3				AP AP
23	64D–11603–02	PISTON RING SET (STD) JUEGO DE ANILLOS (NORMA)	3	3				
	64D–11604–02	PISTON RING SET (0.25MM O/S) JUEGO DE ANILLOS (0.25MM O/S)	3	3				AP AP
	64D–11605–02	PISTON RING SET (0.50MM O/S) JUEGO DE ANILLOS (0.50MM O/S)	3	3				AP AP
24	6D0–11633–00	PIN, PISTON PASADOR, PISTON	6	6				
25	61A–11634–00	CLIP, PISTON PIN PRESILLA, BULON DE PISTON	12	12				
26	6S3–11650–00	CONNECTING ROD ASSY BIELA COMPLETA	6	6				
27	90109–09001	.BOLT .PERNO	2	2				
28	93310–32668	BEARING COJINETE DE RODILLOS	6	6				
29	90201–26013	WASHER, PLATE ARANDELA PLANA	12	12				
30	93310–84106	BEARING COJINETE DE RODILLOS	6	6				

FIG. 4 CYLINDER & CRANKCASE 2 CILINDRO & CARTER 2

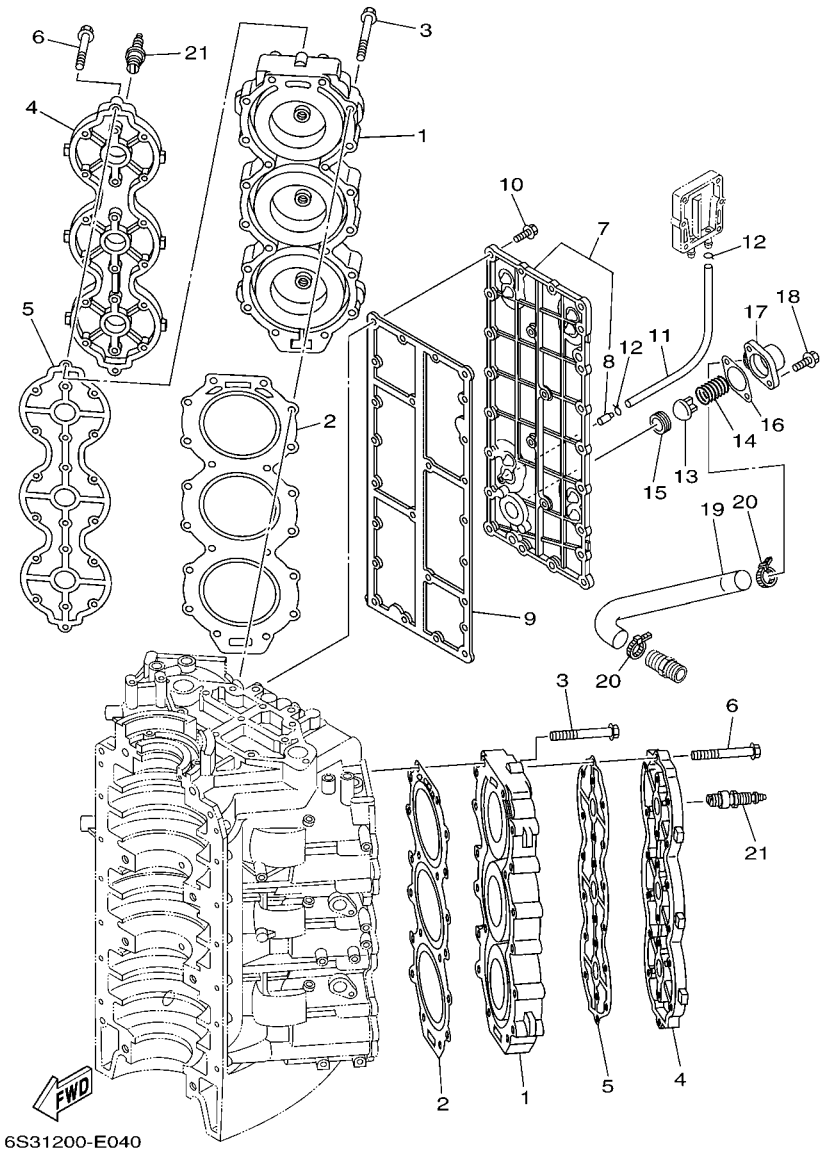

REF. NO.	PART NO. CODIGO Nº	DESCRIPTION DESCRIPCION	6S33	6S43				REMARKS OBSERVACIONES
1	6S3–11111–00–1S	HEAD, CYLINDER 1 CULATA CILINDRO 1	2	2				
2	6S3–11181–00	GASKET, CYLINDER HEAD 1 JUNTA, DE CULATA 1	2	2				
3	90119–08MA8	BOLT, WITH WASHER TORNILLO CON ARANDELA	40	40				
4	6S3–11191–00–1S	COVER, CYLINDER HEAD 1 TAPA CULATA DE CILINDRO 1	2	2				
5	6S3–11193–00	GASKET, HEAD COVER 1 EMPAQUE	2	2				
6	90119–06MA3	BOLT, WITH WASHER TORNILLO CON ARANDELA	40	40				
7	61A–41113–00–1S	OUTER COVER, EXHAUST CUBOERTA EXTERIOR DE ESCAPE	1	1				
8	650–24378–00	.PIPE, JOINT 4 .TUBO DE UNION 4	1	1				
9	6S3–41112–00	GASKET, EXHAUST INNER COVER EMPAQUE	1	1				
10	90119–06MA3	BOLT, WITH WASHER TORNILLO CON ARANDELA	25	25				
11	61A–24312–00	PIPE 2 TUBO 2	1	1				
12	90467–08M18	CLIP PRESILLA	2	2				
13	60H–12416–00	VALVE, PRESSURE CONTROL VALVULA DE CONTROL DE PRESION	1	1				
14	90501–16M11	SPRING, COMPRESSION RESORTE DE COMPRESION	1	1				
15	90480–20M05	GROMMET TAPON	1	1				
16	6G5–11382–A1	GASKET 2 EMPAQUE 2	1	1				
17	6G5–11372–00–1S	COVER, BYPASS 2 CUBIERTA	1	1				
18	90119–06MA2	BOLT, WITH WASHER TORNILLO CON ARANDELA	2	2				
19	61A–12576–00	HOSE 1 MANGUERA 1	1	1				
20	90465–13M18	CLAMP BRIDA	2	2				
21	94702–00247	PLUG, SPARK (NGK BR8HS-10) BUJIA (NGK BR8HS-10)	6	6				

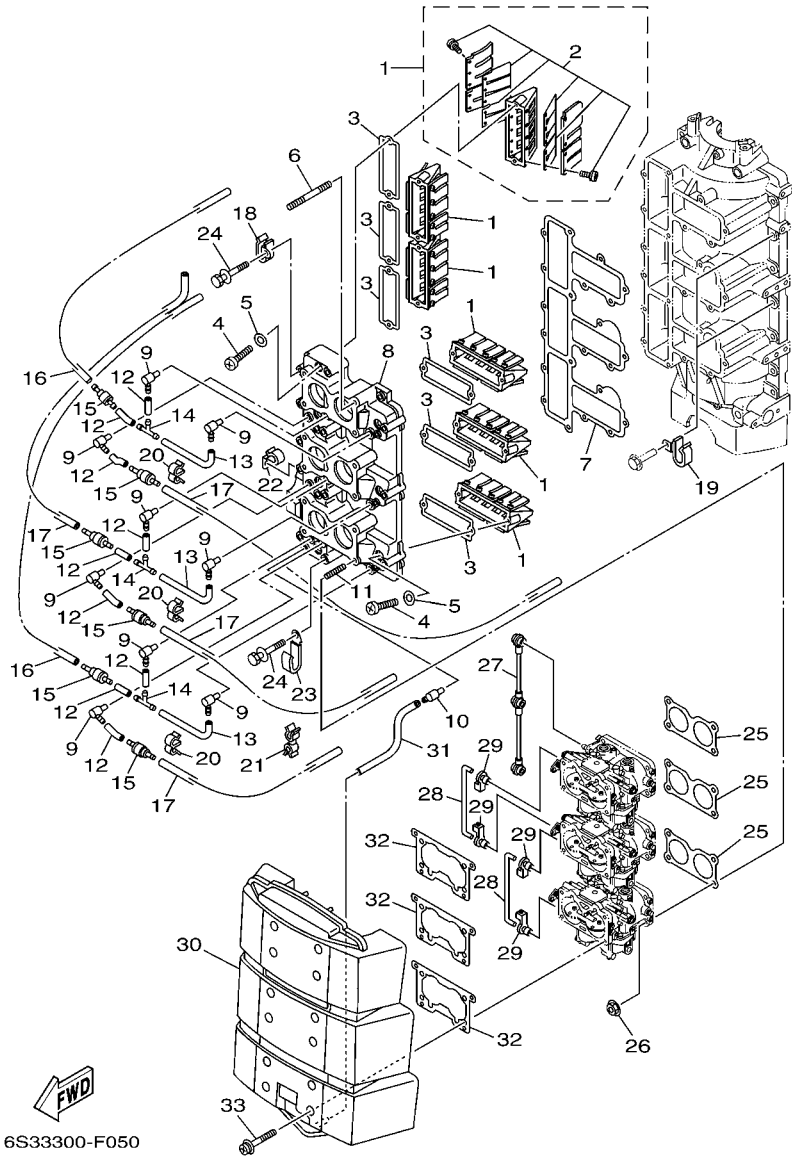

FIG. 5 INTAKE — ADMISION

REF. NO.	PART NO. CODIGO Nº	DESCRIPTION DESCRIPCION	6S33	6S43				REMARKS OBSERVACIONES
1	69L–13610–00	REED VALVE ASSY VALVULA DE LAMINAS COMPLETA	6	6				
2	69L–W0004–00	.REED SET .JUEGO DE VALVULAS DE LENGUETA	1	1				
3	61A–13621–A0	GASKET, VALVE SEAT JUNTA, DE VALV.DE EMPAQUE	6	6				
4	97880–05016	SCREW, PAN HEAD TORNILLO DE CABEZA CON PLANA	12	12				
5	92990–05600	WASHER, PLATE ARANDELA PLANA	12	12				
6	90116–06M15	BOLT, STUD ESPARRAGO	3	3				
7	6S3–13645–00	GASKET, MANIFOLD 1 EMPAQUE	1	1				
8	6S3–13641–00–1S	MANIFOLD 1 MULTIPLE 1	1	1				
9	6E5–13552–01	NOZZLE BOQUILLA	9	9				
10	6E5–11372–01	NIPPLE, HOSE NIPLE DE MANGUERA	1	1				
11	90116–06M30	BOLT, STUD ESPARRAGO	9	9				
12	90445–07023	HOSE (L25) TUBO (L25)	9	9				
13	90445–07024	HOSE (L110) TUBO (L110)	3	3				
14	6E0–24378–00	PIPE, JOINT 4 TUBO DE UNION 4	3	3				
15	6S3–13183–00	VALVE, CHECK VALVULA DE RETENTION	6	6				
16	90445–07M45	HOSE (L340) TUBO (L340)	2	2				
17	90445–07M59	HOSE (L410) TUBO (L410)	4	4				
18	90465–08021	CLAMP BRIDA	2	2				
19	90462–08051	CLAMP BRIDA	2	2				
20	90464–07M20	CLAMP BRIDA	3	3				
21	90464–12182	CLAMP BRIDA	3	3				
22	90462–08052	CLAMP BRIDA	1	1				
23	90465–06M88	CLAMP BRIDA	1	1				
24	90119–06025	BOLT, WITH WASHER TORNILLO CON ARANDELA	19	19				
25	6S3–14198–00	GASKET EMPAQUE	3	3				
26	90179–06M28	NUT TUERCA	12	12				
27	6G5–41217–01	ROD, ACCEL. LEVER VARILLA PALANCA ACELERADOR	1	1				

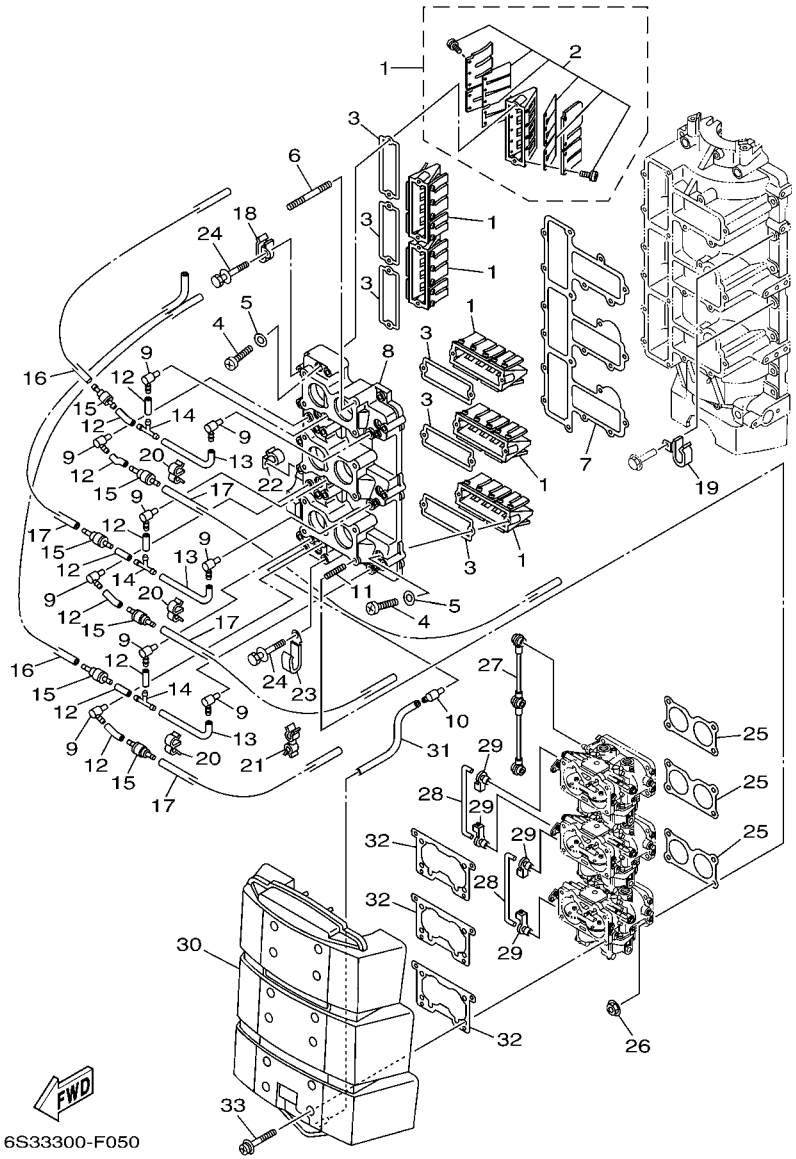

FIG. 5 INTAKE — ADMISION

REF. NO.	PART NO. CODIGO Nº	DESCRIPTION DESCRIPCION	6S33	6S43				REMARKS OBSERVACIONES
28	6E5–41256–01	ROD, CHOKE 1 VARILLA DE AHOGADOR	2	2				
29	661–41262–02	JOINT, CHOKE LEVER CONECTOR DE AHOGADOR	4	4				
30	6K7–14440–02	SILENCER ASSY, INTAKE SILENCIADOR COMPL DE ADMISION	1	1				
31	90445–07MA5	HOSE (L150) TUBO (L150)	1	1				
32	6K7–14483–00	GASKET EMPAQUE	3	3				
33	90159–06M08	SCREW, WITH WASHER TORNILLO CON VALONA	12	12				

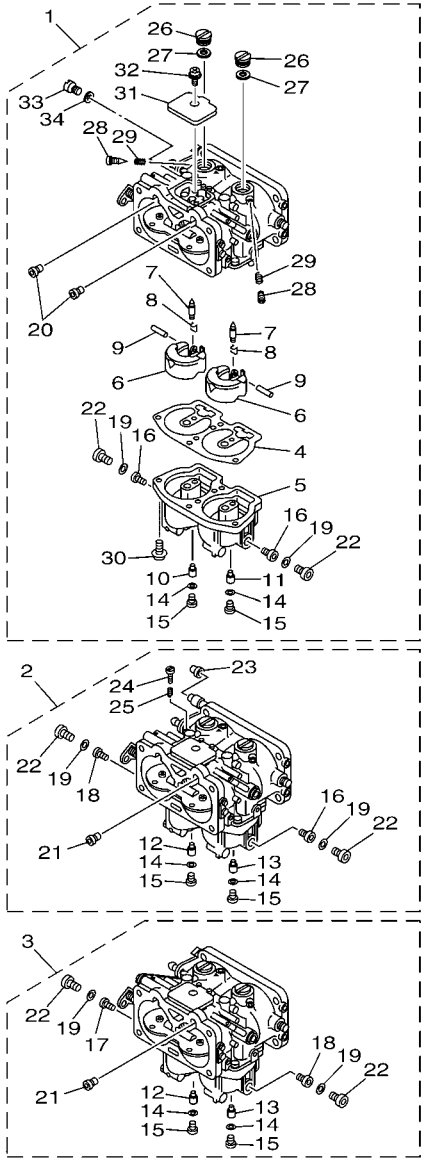

6S31200-E060

FIG. 6 CARBURETOR CARBURADOR

REF. NO.	PART NO. CODIGO Nº	DESCRIPTION DESCRIPCION	6S33	6S43				REMARKS OBSERVACIONES
1	6S3–14301–00	CARBURETOR ASSY 1 CARBURADOR COMPLETO 1	1	1				
2	6S3–14302–00	CARBURETOR ASSY 2 CARBURADOR COMPLETO 2	1	1				
3	6S3–14303–00	CARBURETOR ASSY 3 CARBURADOR COMPLETO 3	1	1				
4	64D–14384–01	.GASKET, FLOAT CHAMBER .EMPAQUE DE CAMARA DE BOIA	3	3				
5	64D–14381–00	.BODY, FLOAT CHAMBER .CUERPO DE CAMARA DE BOIA	3	3				
6	6E5–14385–02	.FLOAT .BOIA	6	6				
7	6E5–14546–00	.VALVE, NEEDLE .VALVULA DE AGUJA	6	6				
8	6E5–14159–00	.CLIP .PRESILLA	6	6				
9	6E5–14386–02	.PIN, FLOAT .PASADOR DE BOIA	6	6				
10	64D–1492F–37	.JET, AIR SLOW (#74) .ESPREA (#74)	1	1				#1 #1
11	64D–1492F–39	.JET, AIR SLOW (#78) .ESPREA (#78)	1	1				#1 #1
12	64D–1492F–40	.JET, AIR SLOW (#80) .ESPREA (#80)	2	2				#2,3 #2,3
13	64D–1492F–42	.JET, AIR SLOW (#84) .ESPREA (#84)	2	2				#2,3 #2,3
14	61U–14959–00	.GASKET .EMPAQUE	6	6				
15	64D–14394–00	.VALVE, DRAIN .VALVULA DE DRENAJE	6	6				
16	64D–1492E–79	.JET, MAIN (#158) .INYECTOR PRINCIPAL (#158)	3	3				#1,2 #1,2
17	64D–1492E–81	.JET, MAIN (#162) .INYECTOR PRINCIPAL (#162)	1	1				#3 #3
18	64D–1492E–82	.JET, MAIN (#164) .INYECTOR PRINCIPAL (#164)	2	2				#2,3 #2,3
19	6E5–14398–01	.GASKET .EMPAQUE	6	6				
20	61A–1492H–10	.JET, SLOW AIR BLEED (#50) .ESPREA AIRE (#50)	2	2				#1 #1
21	61A–1492H–12	.JET, SLOW AIR BLEED (#60) .ESPREA AIRE (#60)	4	4				#2,3 #2,3
22	61A–14383–01	.SCREW, DRAIN .TORNILLO DE DRENAJE	6	6				
23	66T–14584–00	.STOPPER .RETENER	1	1				#2 #2
24	6E5–14321–00	.SCREW, THROTTLE .TORNILLO DE OBTURADOR	1	1				#2 #2
25	6J8–14334–00	.SPRING, THROTTLE .RESORTE DE AJUSTADOR DE AIRE	1	1				#2 #2
26	6E5–14328–01	.PLUG .TORNILLO TOPE DE PILOTO	6	6				
27	6E5–14979–00	.GASKET .EMPAQUE DE ARRANQUE	6	6				

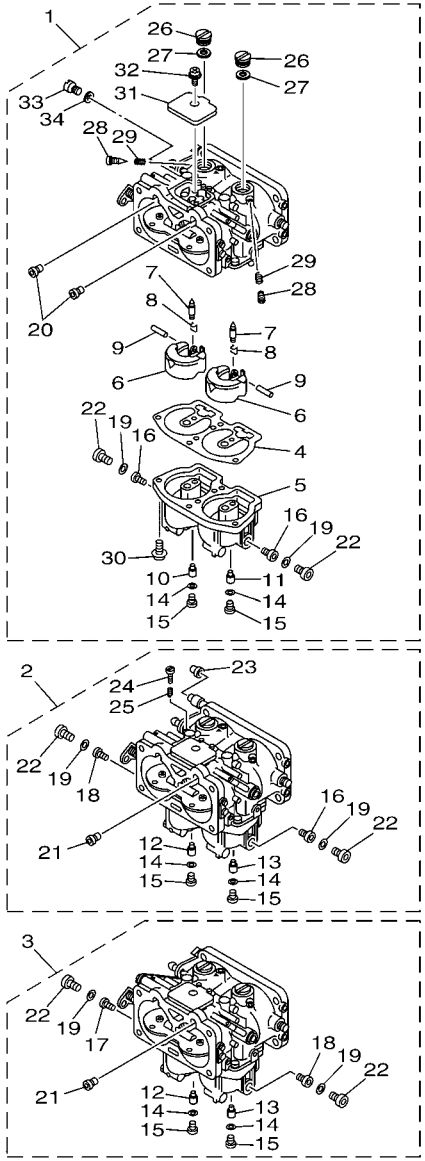

6S31200-E060

FIG. 6 CARBURETOR CARBURADOR

REF. NO.	PART NO. CODIGO Nº	DESCRIPTION DESCRIPCION	6S33	6S43				REMARKS OBSERVACIONES
28	6E5–14323–03	.SCREW, AIR ADJUSTING .TORNILLO DE AJUSTE DE AIRE	6	6				
29	6E5–14223–00	.SPRING, AIR ADJUSTING .RESORTE, AJUSTE DE AIRE	6	6				
30	97980–05116	.SCREW, WITH WASHER .TORNILLO, CON ARANDELA	12	12				
31	6E5–14527–01	.PLATE .PLACA	3	3				
32	97980–05108	.SCREW, WITH WASHER .TORNILLO, CON ARANDELA	3	3				
33	6E5–14324–00	.SCREW, FLAT HEAD .TORNILLO CABEZA PLANA	3	3				
34	6J8–14959–00	.GASKET .EMPAQUE	3	3				

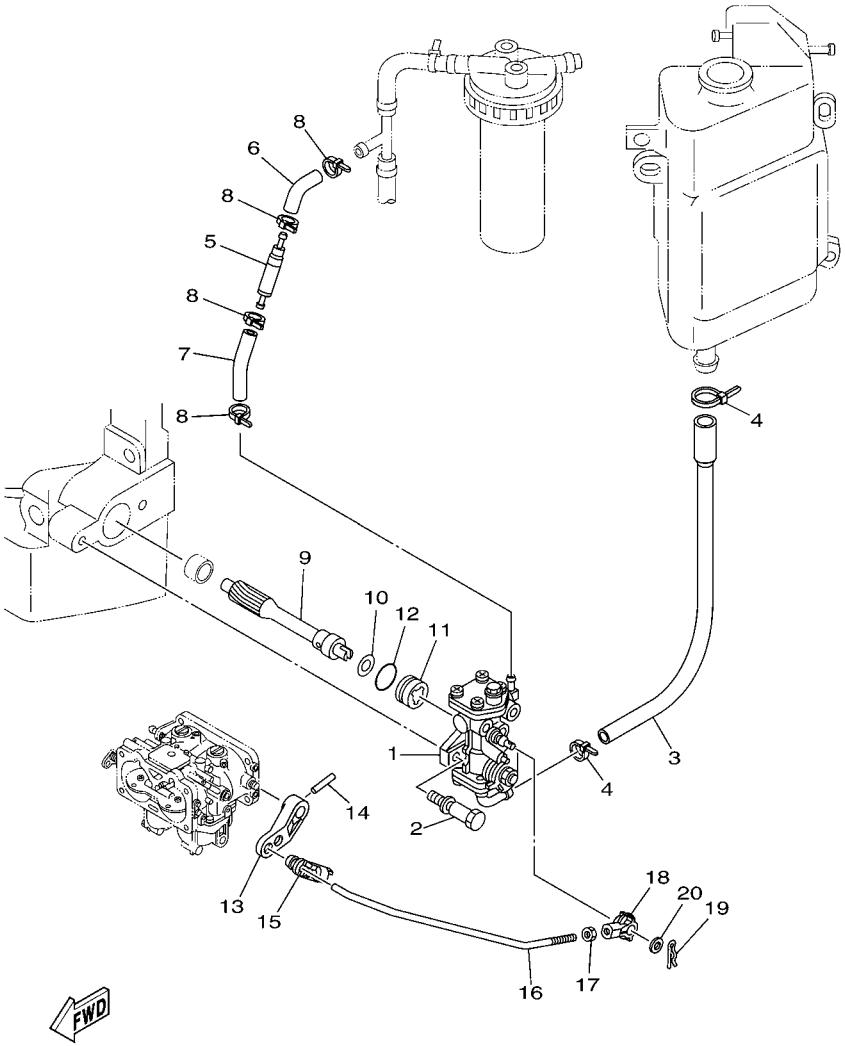

FIG. 7 OIL PUMP — BOMBA DE ACEITE

REF. NO.	PART NO. CODIGO Nº	DESCRIPTION DESCRIPCION	6S33	6S43				REMARKS OBSERVACIONES
1	6S3–13200–00	OIL INJECTION PUMP ASSY BOMBA DE ACEITE COMPLETA	1	1				
2	90109–06M40	BOLT PERNO	2	2				
3	6R3–13416–00	PIPE, OIL 1 TUBO DE ACEITE 1	1	1				
4	90465–11M10	CLAMP BRIDA	2	2				
5	65L–13183–00	VALVE, CHECK VALVULA DE RETENTION	1	1				
6	61A–24316–00	PIPE 6 TUBO 6	1	1				
7	90446–09001	HOSE (L50) TUBO (L50)	1	1				
8	90465–11M10	CLAMP BRIDA	4	4				
9	61A–11537–00	GEAR, DRIVEN ENGRANAJE TRACCION	1	1				
10	90201–09M01	WASHER, PLATE ARANDELA PLANA	1	1				
11	61A–13117–00	COLLAR, DISTANCE COLLAR, DISTANCIA	1	1				
12	93210–18MA9	O-RING ANILLO O	1	1				
13	6E5–14276–01	LEVER PALANCA	1	1				
14	91690–30016	PIN, SPRING PASADOR DE RESORTE	1	1				
15	6R5–41237–00	JOINT, LINK CONECTOR	1	1				
16	6S3–41241–00	ROD, LINK VARILLA	1	1				
17	95380–05600	NUT TUERCA	1	1				
18	6H1–41237–00	JOINT, LINK CONECTOR	1	1				
19	90468–05M03	CLIP PRESILLA	1	1				
20	90202–05088	WASHER, PLATE ARANDELA DE PLANA	1	1				

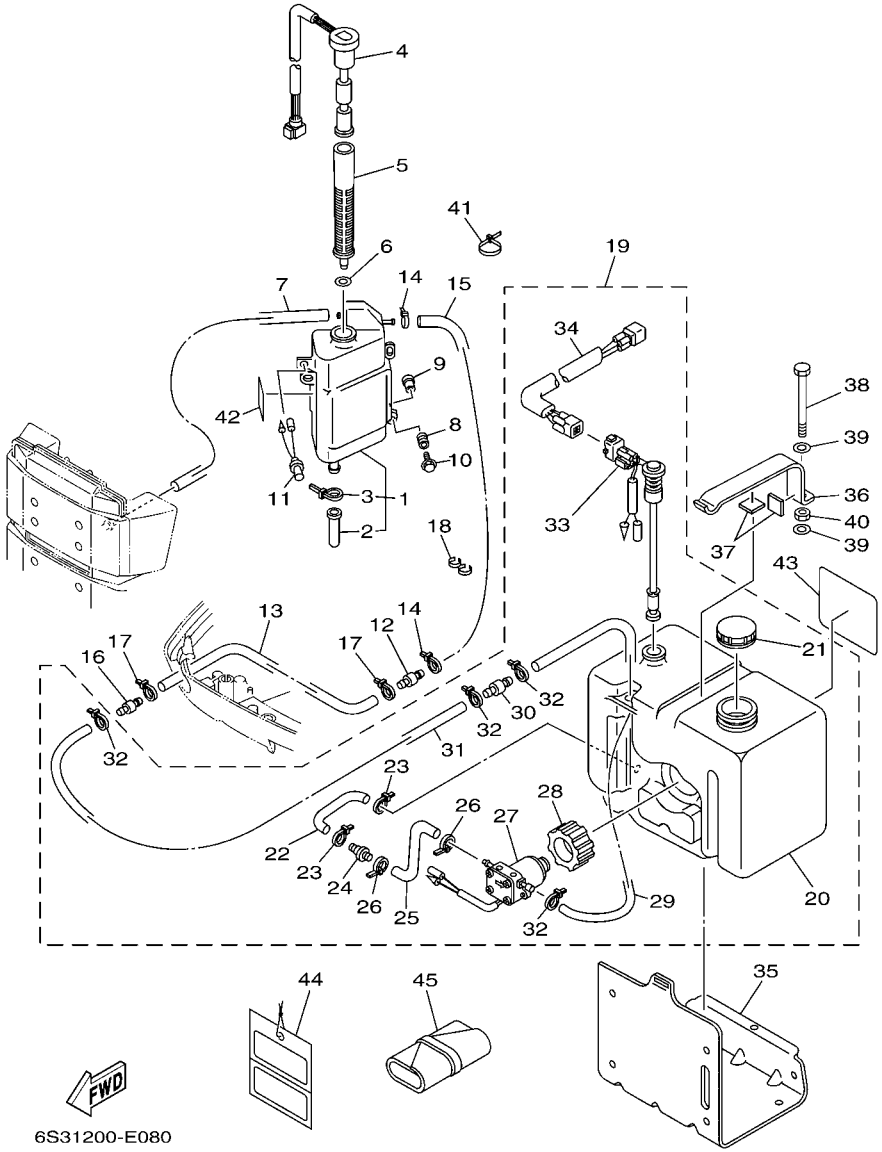

FIG. 8 OIL TANK — COMPONER Y PODER VARILLA

REF. NO.	PART NO. CODIGO Nº	DESCRIPTION DESCRIPCION	6S33	6S43				REMARKS OBSERVACIONES
1	61A–21750–00	OIL TANK ASSY DEPOSITO DE ACEITE COMPLETO	1	1				
2	6E5–13448–00	.CAP .TAPA	1	1				
3	90465–13M11	.CLAMP .BRIDA	1	1				
4	61A–85730–01	OIL LEVEL GAUGE ASSY ACEITE	1	1				
5	61A–13411–00	STRAINER, OIL FILTRO DE ACEITE	1	1				
6	6E5–13414–00	GASKET, STRAINER COVER EMPAQUE DE TAPA FILTRO	1	1				
7	90445–05002	HOSE (L420) TUBO (L420)	1	1				
8	6A0–82317–00	DAMPER, IGNITION COIL AMORTIGUADOR BOBINA ENCENDIDO	3	3				
9	90387–06119	COLLAR ESPACIADOR	3	3				
10	90119–06M65	BOLT, WITH WASHER TORNILLO CON ARANDELA	3	3				
11	6R3–8259E–00	SWITCH ASSY INTERRUPTOR COMPL	1	1				
12	6E5–24379–00	PIPE, JOINT 4 TUBO DE UNION 4	1	1				
13	90445–12M04	HOSE (L1900) MANGUERA (L1900)	1	1				
14	90465–11M10	CLAMP BRIDA	2	2				
15	6E5–24323–00	PIPE 12 TUBO 12	1	1				
16	6E5–24379–00	PIPE, JOINT 4 TUBO DE UNION 4	1	1				
17	90465–11M10	CLAMP BRIDA	2	2				
18	90464–13M34	CLAMP BRIDA	1	1				
19	61A–21708–20	SUB OIL TANK ASSY DEPOSITO DE ACEITE COMPLETO	1	1				
20	6E5–21733–20	.SUB TANK, OIL (10.5L) .SUB DEPOSITO DE ACEITE (10.5L	1	1				
21	6E5–21770–03	.OIL TANK CAP ASSY .TAPA DE DEPOSITO DE ACEITE	1	1				
22	6E5–24322–00	.PIPE 11 .TUBO 11	1	1				
23	90465–11M10	.CLAMP .BRIDA	2	2				
24	646–24251–02	.STRAINER 1 .COLADOR 1	1	1				
25	6E5–24319–01	.PIPE, OIL .TUBO DE ACEITE	1	1				
26	90465–11M10	.CLAMP .BRIDA	2	2				
27	6E5–81900–01	.OIL FEED PUMP ASSY .ACEITE	1	1				

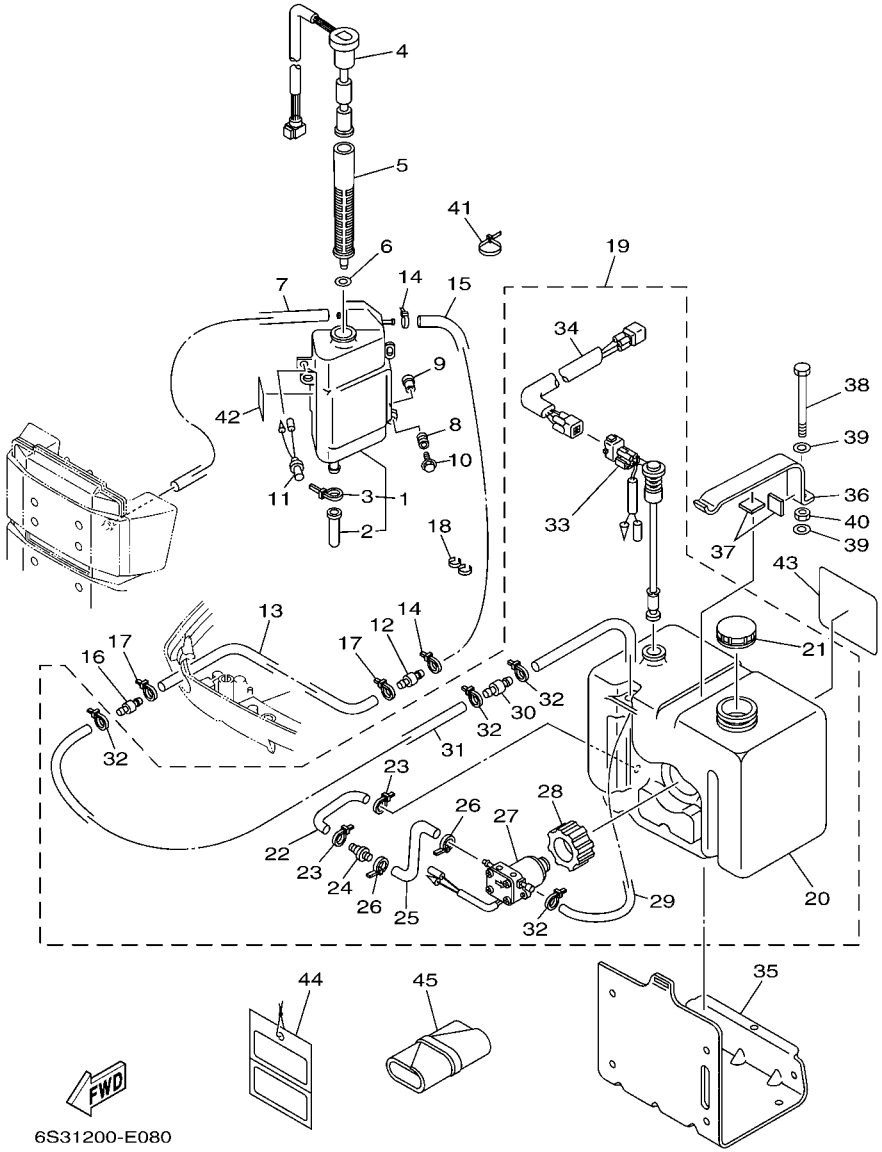

FIG. 8 OIL TANK — COMPONER Y PODER VARILLA

REF. NO.	PART NO. CODIGO Nº	DESCRIPTION DESCRIPCION	6S33	6S43				REMARKS OBSERVACIONES
28	6E5–81922–00	.GROMMET .TAPON PROTECTOR	1	1				
29	6E5–24321–01	.PIPE 10 .TUBO 10	1	1				
30	6E5–24379–00	.PIPE, JOINT 4 .TUBO DE UNION 4	1	1				
31	90445–11M26	.HOSE (L6500) .TUBO (L6500)	1	1				
32	90465–11M10	.CLAMP .BRIDA	4	4				
33	6E5–85720–05	.OIL LEVEL GAUGE ASSY .MEDIDOR DE NIVEL DE ACEITE	1	1				
34	6R3–85721–80	.WIRE, LEAD (L=8.0M) .CABLE CONDUCTOR (L=8.0M)	1	1				(4P) (4P)
35	6E5–21734–01–33	HOLDER, OIL SUB TANK SOSTEN SUBDEP.DE ACEITE	1	1				
36	6E5–21798–01–33	BRACKET, DAMPER SOPORTE DE AMORTIGUADOR	1	1				
37	6E5–21746–00	DAMPER AMORTIGUADOR	2	2				
38	97080–06100	BOLT PERNO	1	1				
39	92990–06600	WASHER, PLATE ARANDELA PLANA	2	2				
40	95380–06600	NUT, HEXAGON TUERCA	1	1				
41	90465–13M11	CLAMP BRIDA	2	2				
42	6E5–85711–60	MARK, CAUTION MARKER	1	1				
43	6E5–13437–62	MARK, CAUTION MARKER	1	1				
44	61H–2819R–31	TAG, WARNING ETIQUETA DE ADVERTENCIA	1	1				FOR CAR FOR CAR
45	656–W2810–02	TOOL KIT JUEGO DE HERRAMIENTAS	1	1				

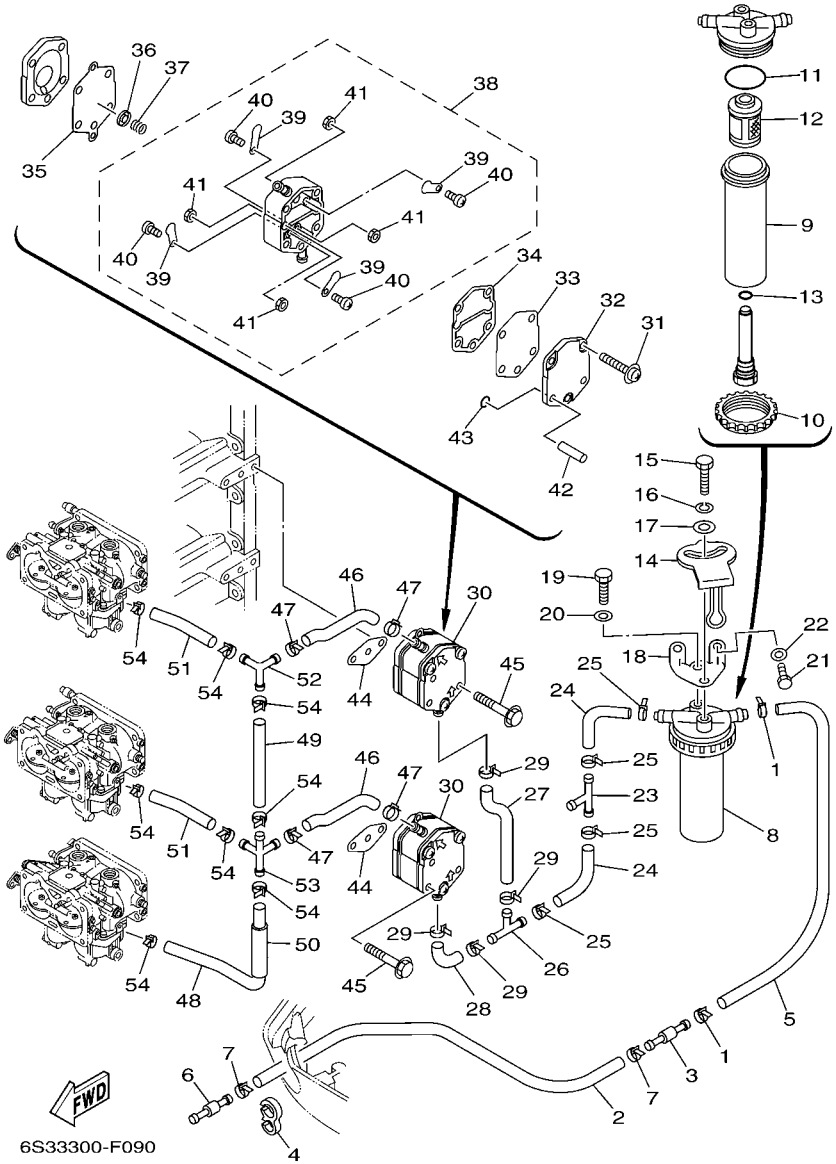

FIG. 9 FUEL 1 — COMBUSTIBLE 1

REF. NO.	PART NO. CODIGO Nº	DESCRIPTION DESCRIPCION	6S33	6S43				REMARKS OBSERVACIONES
1	90465–11M10	CLAMP BRIDA	2	2				
2	90445–13M17	HOSE (L2700) MANGUERA (L2700)	1	1				
3	6R3–24377–00	PIPE, JOINT 3 TUBO DE UNION 3	1	1				
4	90464–13M34	CLAMP BRIDA	1	1				
5	61A–24313–00	PIPE 3 TUBO 3	1	1				
6	6R3–24377–00	PIPE, JOINT 3 TUBO DE UNION 3	1	1				
7	90465–11M10	CLAMP BRIDA	2	2				
8	60H–24560–00	FILTER ASSY FILTRO COMPLETO	1	1				
9	68F–24521–00	.CUP, FILTER .COPA DE FILTRO	1	1				
10	65L–24531–01	.NUT .TUERCA	1	1				
11	61A–24564–00	.O-RING .ANILLO O	1	1				
12	61A–24563–00	.ELEMENT, FILTER .ELEMENTO DEL FILTRO	1	1				
13	68F–24649–00	.O-RING .ANILLO O	1	1				
14	60H–24558–00	HOLDER, FILTER SOPORTE DE FILTRO	1	1				
15	97095–06016	BOLT PERNO	1	1				
16	92995–06100	WASHER, SPRING ARANDELA	1	1				
17	90201–06068	WASHER, PLATE ARANDELA PLANA	1	1				
18	61A–24566–01	BRACKET, FILTER SOPORTE DEL FILTRO	1	1				
19	97095–06014	BOLT PERNO	1	1				
20	92995–06600	WASHER ARANDELA	1	1				
21	97095–06016	BOLT PERNO	2	2				
22	92995–06600	WASHER ARANDELA	2	2				
23	68F–14485–00	PIPE, JOINT TUBO DE UNION	1	1				
24	6R5–24314–00	PIPE 4 TUBO 4	2	2				
25	90465–11M10	CLAMP BRIDA	4	4				
26	6E5–24378–00	PIPE, JOINT 3 TUBO DE UNION 3	1	1				
27	6S3–24315–00	PIPE 5 TUBO DE DESAGUE	1	1				

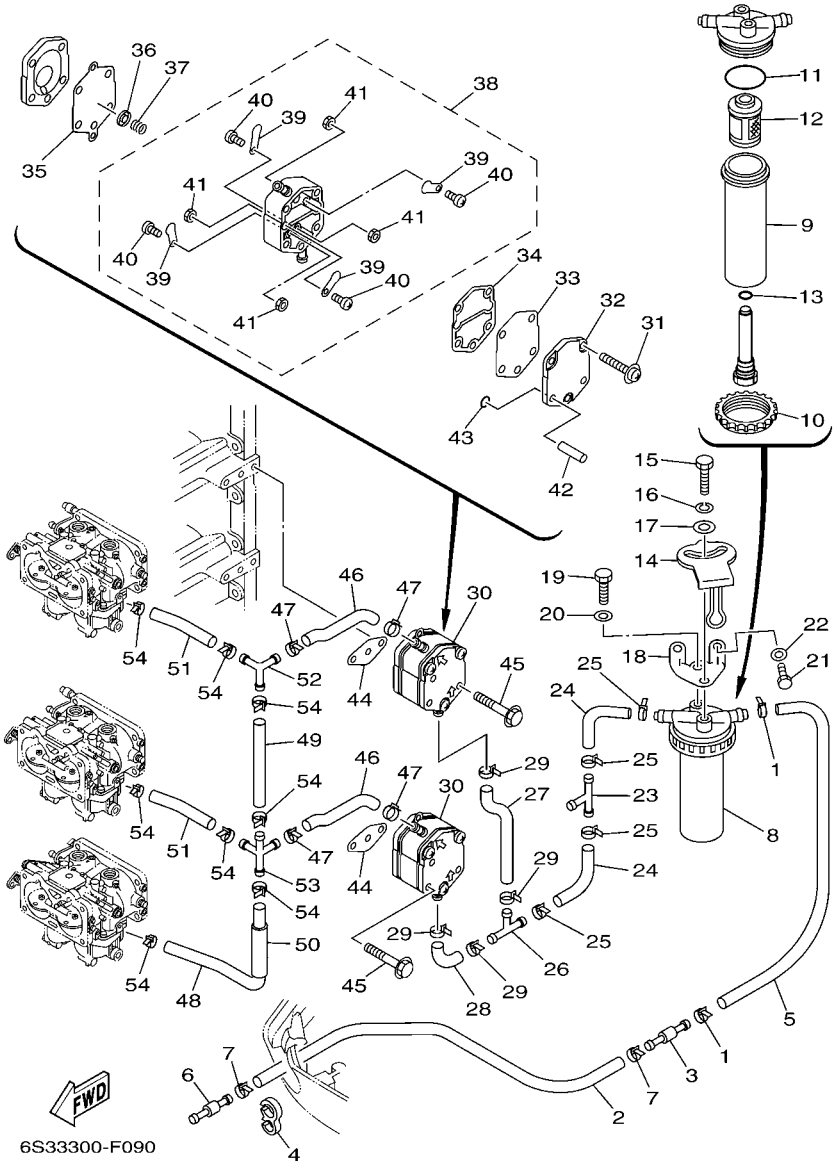

FIG. 9 FUEL 1 — COMBUSTIBLE 1

REF. NO.	PART NO. CODIGO Nº	DESCRIPTION DESCRIPCION	6S33	6S43				REMARKS OBSERVACIONES
28	6E5–24315–00	PIPE 5 TUBO DE DESAGUE	1	1				
29	90465–11M10	CLAMP BRIDA	4	4				
30	6E5–24410–04	FUEL PUMP ASSY BOMBA DE COMBUSTIBLE COMPLETA	2	2				
31	6E5–24444–01	.SCREW .TORNILLO	3	3				
32	6E5–24413–01	.BODY 2 .CUERPO 2	1	1				
33	6E5–24471–01	.DIAPHRAGM .DIAFRAGMA	1	1				
34	6E5–24435–01	.GASKET, BODY 2 .EMPAQUE	1	1				
35	6E5–24411–01	.DIAPHRAGM .DIAFRAGMA	1	1				
36	648–24424–00	.SEAT, SPRING .PLACA DE RESORTE	1	1				
37	6E5–24423–00	.SPRING, DIAPHRAGM .RESORTE DE DIAFRAGMA	1	1				
38	6E5–24412–11	.BODY 1 .CUERPO 1	1	1				
39	6A0–24421–01	..VALVE, CHECK ..VALVULA DE RETENCION	4	4				
40	6A0–14325–00	..SCREW, PAN HEAD ..TORNILLO CABEZA REDONDA	4	4				
41	95380–03600	..NUT ..TUERCA	4	4				
42	6E5–24492–00	.BUSH, FULEL PUMP .BUJE	2	2				
43	6E5–24486–00	.O-RING .ANILLO O	2	2				
44	650–24431–A0	GASKET, FUEL PUMP 1 EMPAQUE BOMBA COMBUST 1	2	2				
45	97595–06550	BOLT, WITH WASHER PERNO CON ARANDELA	4	4				
46	6S3–24315–00	PIPE 5 TUBO DE DESAGUE	2	2				
47	90465–11M10	CLAMP BRIDA	4	4				
48	6S3–24316–00	PIPE 6 TUBO 6	1	1				
49	6G5–24317–01	PIPE 7 TUBO 7	1	1				
50	90446–15M07	HOSE (L60) TUBO (L60)	1	1				
51	6K7–24318–00	PIPE, OVERFLOW TUBO DE REBOSAMIENTO	2	2				
52	6G5–24376–00	PIPE, JOINT 1 TUBO DE UNION 1	1	1				
53	6G5–24377–00	PIPE, JOINT 3 TUBO DE UNION 3	1	1				
54	90465–11M10	CLAMP BRIDA	8	8				

FIG. 10 FUEL 2 — COMBUSTIBLE 2

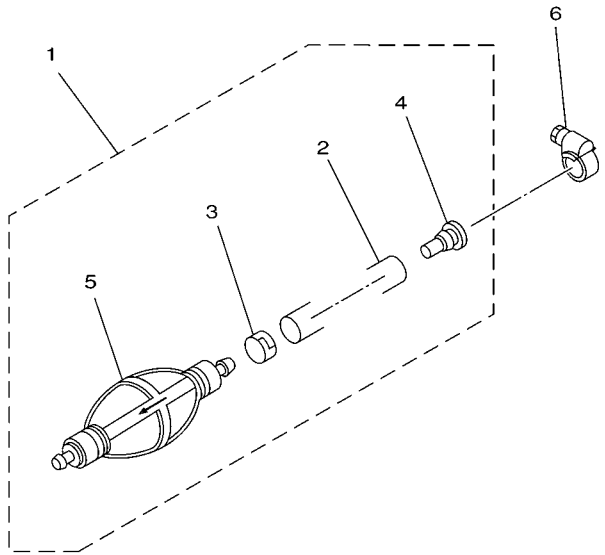

61A0200-0110

REF. NO.	PART NO. CODIGO Nº	DESCRIPTION DESCRIPCION	6S33	6S43				REMARKS OBSERVACIONES
1	6Y2–24307–50	FUEL PIPE COMP. 2 MANGUERA COMPL,COMBUSTIBLE 2	1	1				AP EXCEPT CAR,CHN AP EXCEPT CAR,CHN
2	90445–13M01	.HOSE (L2050) .MANGUERA (L2050)	1	1				
3	6E5–24351–51	.BAND 1 .ABRAZADERA 1	1	1				
4	90480–06M19	.GROMMET .TAPON	1	1				
5	6Y2–24360–60	.PRIMER PUMP ASSY .SOPORTE BOMBA	1	1				
6	90450–10M07	HOSE CLAMP ASSY BRIDA, MANGUERA	1	1				AP EXCEPT CAR,CHN AP EXCEPT CAR,CHN

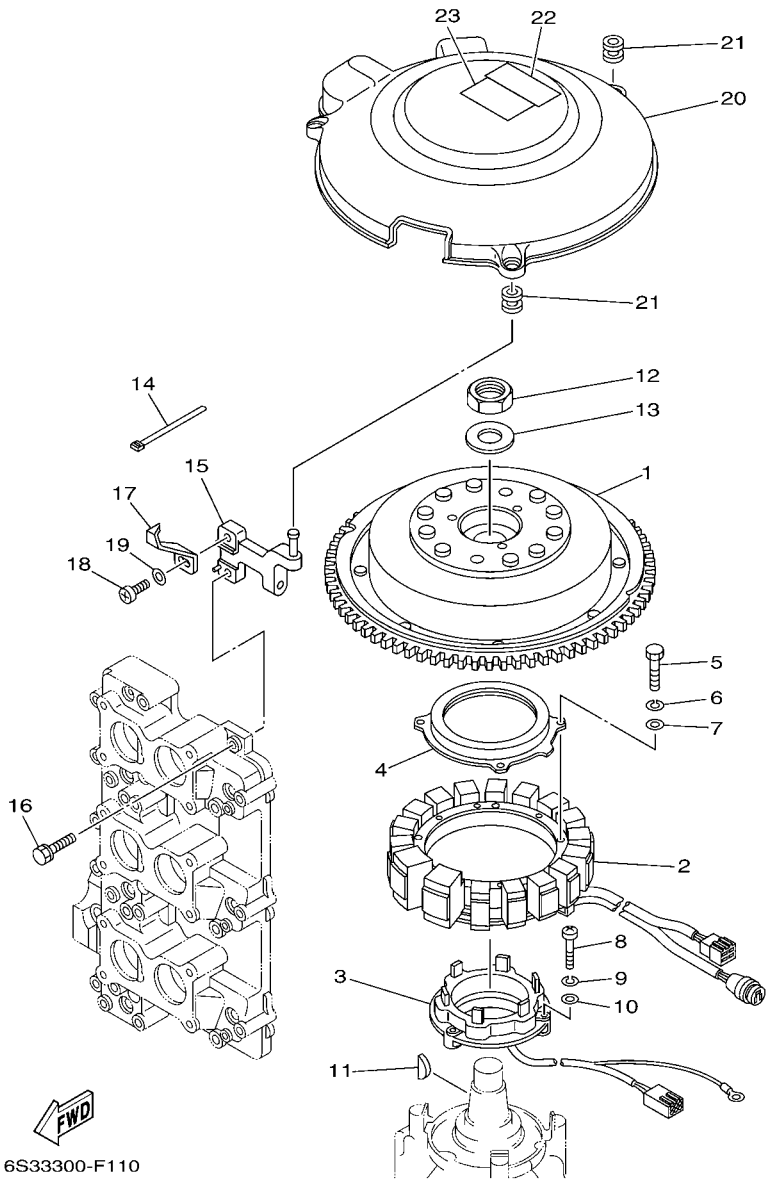

FIG. 11 GENERATOR GENERADOR

REF. NO.	PART NO. CODIGO Nº	DESCRIPTION DESCRIPCION	6S33	6S43				REMARKS OBSERVACIONES
1	61A–85550–01	ROTOR ASSY ROTOR COMPLETO	1	1				
2	65L–85510–10	STATOR ASSY ESTATOR COMPLETO	1	1				
3	61A–85580–01	COIL, PULSER BOBINA DE PULSACION	1	1				
4	61A–83721–00	COVER CUBIERTA	1	1				
5	97013–06035	BOLT PERNO	4	4				
6	92903–06100	WASHER, SPRING RONDANA SENCILLA	4	4				
7	92903–06600	WASHER, PLATE RONDANA SENCILLA	4	4				
8	97885–05030	SCREW, PAN HEAD TORNILLO A MUESCA	3	3				
9	92995–05100	WASHER ARANDELA	3	3				
10	92995–05600	WASHER ARANDELA	3	3				
11	90280–05015	KEY, WOODRUFF CUNA WOODRUFF	1	1				
12	90170–24M22	NUT TUERCA	1	1				
13	90201–25M02	WASHER, PLATE ARANDELA PLANA	1	1				
14	90465–11M10	CLAMP BRIDA	1	1				
15	6S3–8A870–00	STAY ASSY SOPORTE	1	1				
16	90119–06MA2	BOLT, WITH WASHER TORNILLO CON ARANDELA	1	1				
17	6S3–81332–00	PLATE, TIMING PLACA REGULADOR DE TIEMPO	1	1				
18	97885–06010	SCREW, PAN HEAD TORNILLO A MUESCA	1	1				
19	92995–06600	WASHER ARANDELA	1	1				
20	61A–81337–01	COVER, FLYWHEEL CUBIERTA DE VOLANTE	1	1				
21	663–82317–01	DAMPER, IGNITION COIL AMORTIGUADOR BOBINA ENCENDIDO	3	3				
22	6A1–83625–41	MARK 5 MARCA 5	1	1				
23	6A1–83625–51	MARK 5 MARCA 5	1	1				

FIG. 12 ELECTRICAL 1 — EQUIPO ELECTRICO 1

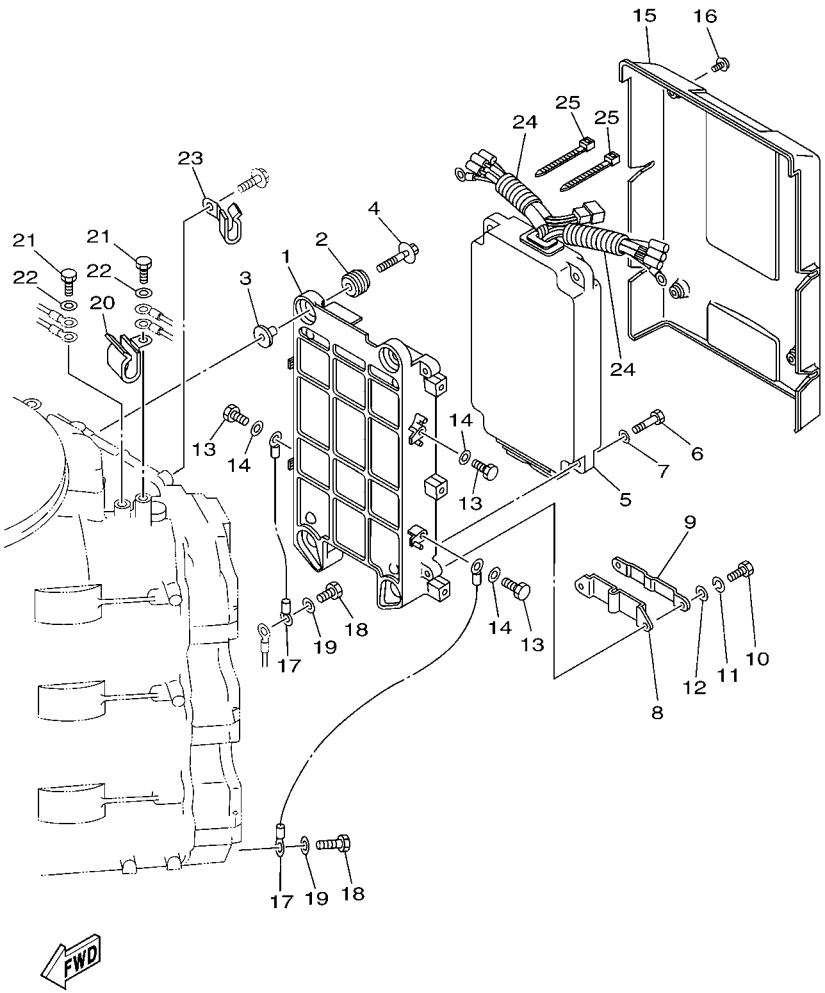

6S33300-F120

REF. NO.	PART NO. CODIGO Nº	DESCRIPTION DESCRIPCION	6S33	6S43				REMARKS OBSERVACIONES
1	61A–85542–01–94	BRACKET SOPORTE	1	1				
2	90480–09M12	GROMMET TAPON	4	4				
3	90387–06M03	COLLAR ESPACIADOR	4	4				
4	90119–06M28	BOLT, WITH WASHER TORNILLO CON ARANDELA	4	4				
5	6S3–85540–00	C.D.I. UNIT ASSY UNIDAD C.D.I. COMPLETA	1	1				
6	97013–06025	BOLT PERNO	4	4				
7	92903–06600	WASHER, PLATE RONDANA SENCILLA	4	4				
8	61A–85548–00	HOLDER SOSTEN	1	1				
9	61A–85525–00	COVER CUBIERTA	1	1				
10	97095–06016	BOLT PERNO	2	2				
11	92995–06100	WASHER, SPRING ARANDELA	2	2				
12	92995–06600	WASHER ARANDELA	2	2				
13	97013–06014	BOLT PERNO	4	4				
14	92903–06600	WASHER, PLATE RONDANA SENCILLA	4	4				
15	61A–85537–00	COVER CUBIERTA	1	1				
16	90159–06M03	SCREW, WITH WASHER TORNILLO CON VALONA	4	4				
17	6G0–82519–00	WIRE, EARTH LEAD CABLE CONDUCTOR A TIERRA	2	2				
18	97095–06012	BOLT PERNO	2	2				
19	92995–06600	WASHER ARANDELA	2	2				
20	90462–08053	CLAMP BRIDA	1	1				
21	97095–06014	BOLT PERNO	2	2				
22	92995–06600	WASHER ARANDELA	2	2				
23	90465–08021	CLAMP BRIDA	1	1				
24	90446–14M88	HOSE TUBO RESEIRADERO	2	2				
25	90465–11M10	CLAMP BRIDA	2	2				

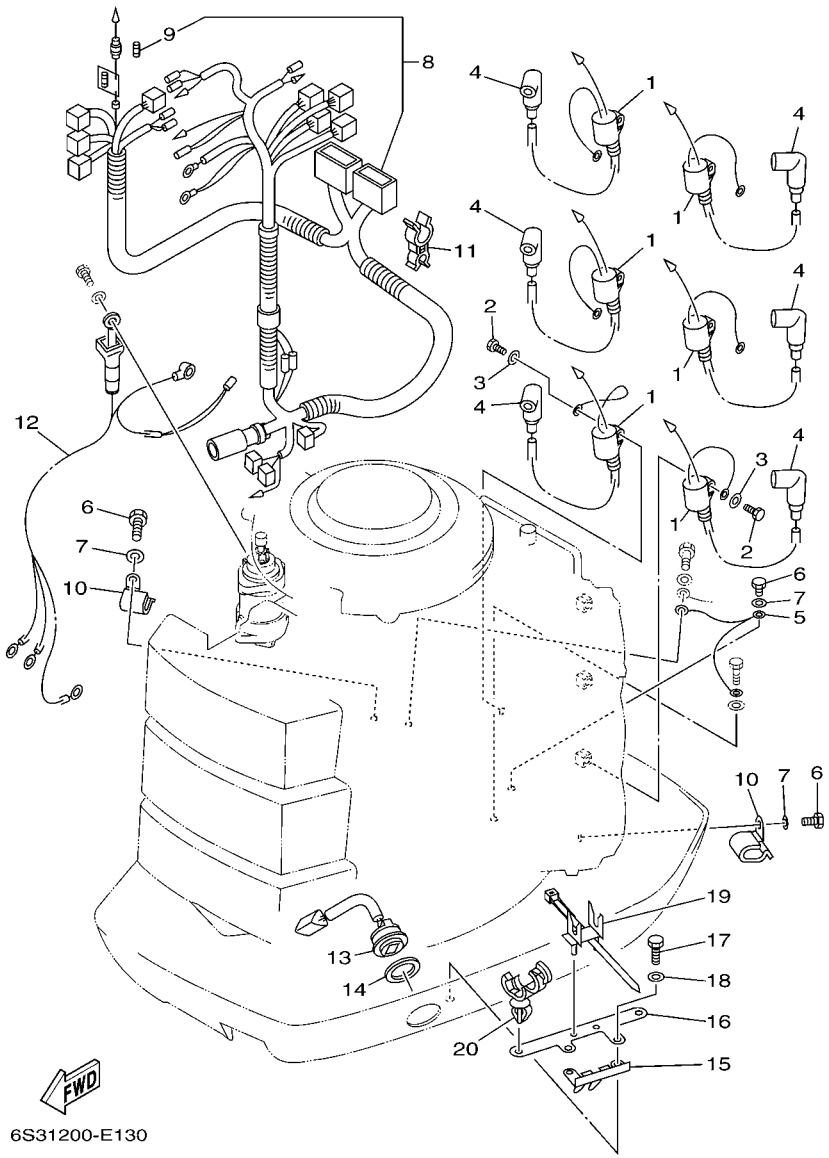

FIG. 13 ELECTRICAL 2 — EQUIPO ELECTRICO 2

REF. NO.	PART NO. CODIGO Nº	DESCRIPTION DESCRIPCION	6S33	6S43				REMARKS OBSERVACIONES
1	61A–85570–00	IGNITION COIL ASSY BOBINA DE IGNICION COMPLETO	6	6				
2	97013–06020	BOLT PERNO	6	6				
3	92903–06600	WASHER, PLATE RONDANA SENCILLA	6	6				
4	6E3–82370–21	PLUG CAP ASSY TAPON DE BUJIA COMPLT	6	6				
5	61A–82531–00	WIRE, LEAD CABLE CONDUCTOR	1	1				
6	97095–06012	BOLT PERNO	3	3				
7	92995–06600	WASHER ARANDELA	3	3				
8	6S3–82590–00	WIRE HARNESS ASSY CONJUNTO DE CABLES	1	1				
9	663–82151–00	.FUSE (12V-20A) .FUSIBLE (12V-20A)	1	1				
10	90465–08M89	CLAMP BRIDA	2	2				
11	90464–18003	CLAMP BRIDA	2	2				
12	61A–82105–00	WIRE HARNESS ARNES DE CABLES	1	1				
13	61A–82563–00	TRIM & TILT SWITCH ASSY INTERRUPTOR DE INCLINACION	1	1				
14	6E5–82587–00	GASKET EMPAQUETADURA	1	1				
15	61A–83614–00	BRACKET SOPORTE	1	1				
16	6S3–83614–00	BRACKET SOPORTE	1	1				
17	97095–06016	BOLT PERNO	2	2				
18	92995–06600	WASHER ARANDELA	2	2				
19	688–82594–00	CLAMP GRAMPA	1	1				
20	90464–20181	CLAMP BRIDA	2	2				

FIG. 14 ELECTRICAL 3 — EQUIPO ELECTRICO 3

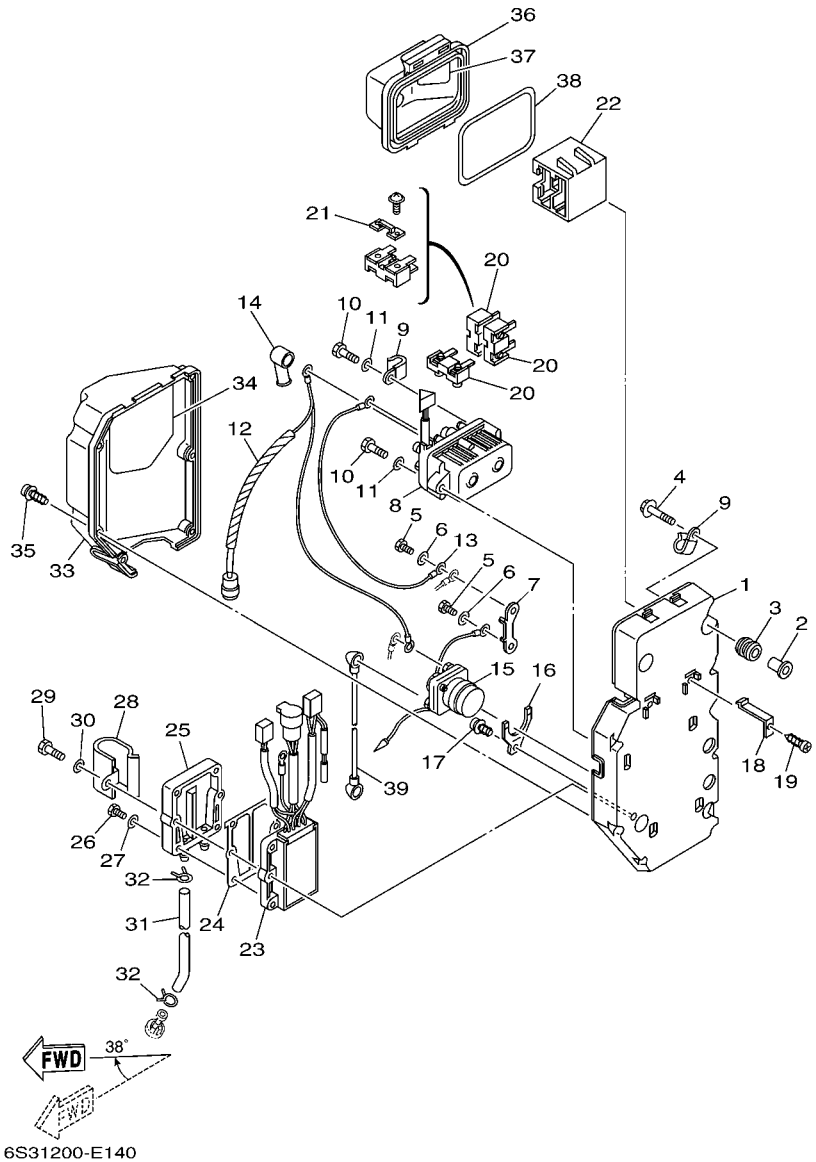

REF. NO.	PART NO. CODIGO Nº	DESCRIPTION DESCRIPCION	6S33	6S43				REMARKS OBSERVACIONES
1	61A–81948–01	BRACKET SOPORTE	1	1				
2	90387–06119	COLLAR ESPACIADOR	4	4				
3	6A0–82317–00	DAMPER, IGNITION COIL AMORTIGUADOR BOBINA ENCENDIDO	4	4				
4	90119–06M65	BOLT, WITH WASHER TORNILLO CON ARANDELA	4	4				
5	97013–06014	BOLT PERNO	2	2				
6	92903–06600	WASHER, PLATE RONDANA SENCILLA	2	2				
7	61A–87149–00	CONNECTOR CONECTOR	1	1				
8	61A–81950–00	RELAY ASSY RELE COMPLETO	1	1				
9	90465–08M63	CLAMP BRIDA	2	2				
10	97013–06030	BOLT PERNO	2	2				
11	92903–06600	WASHER, PLATE RONDANA SENCILLA	2	2				
12	61A–81949–10	WIRE, LEAD CABLE CONDUCTOR	1	1				
13	61A–81949–00	WIRE, LEAD CABLE CONDUCTOR	1	1				
14	6G5–82119–00	COVER, LEAD WIRE CUBIERTA DE CABLE CONDUCTOR	1	1				
15	61A–81941–00	STARTER RELAY ASSY RELE DE ARRANQUE	1	1				
16	61A–81952–00	HOLDER, RELAY SOSTEN DE RELE	1	1				
17	97780–50612	SCREW, TAPPING TORNILLO DE CABEZA DE CONO ACH	1	1				
18	61A–82171–00	STAY, FUSE BOX SOPORTE CAJA DE FUSIBLES	2	2				
19	97780–50612	SCREW, TAPPING TORNILLO DE CABEZA DE CONO ACH	2	2				
20	61A–82150–01	FUSE HOLDER ASSY PORTA-FUSIBLES COMPLETO	3	3				
21	61A–82151–00	.FUSE (12V-80A) .FUSIBLE (12V-80A)	1	1				
22	61A–82153–00	STAY, FUSE HOLDER ABRAZADERA FUSIBLE	1	1				
23	61A–81960–02	RECTIFIER & REGULATOR ASSY RECTIFICADOR Y REGULADOR	1	1				
24	69J–81975–A0	PLATE, RECTIFIER FITTING PLACA ACCESORIA RECTIF.	1	1				
25	69J–81972–01–1S	COVER, RECTIFIER CUBIERTA DE RECTIFICADOR	1	1				
26	97013–06025	BOLT PERNO	4	4				
27	92903–06600	WASHER, PLATE RONDANA SENCILLA	4	4				

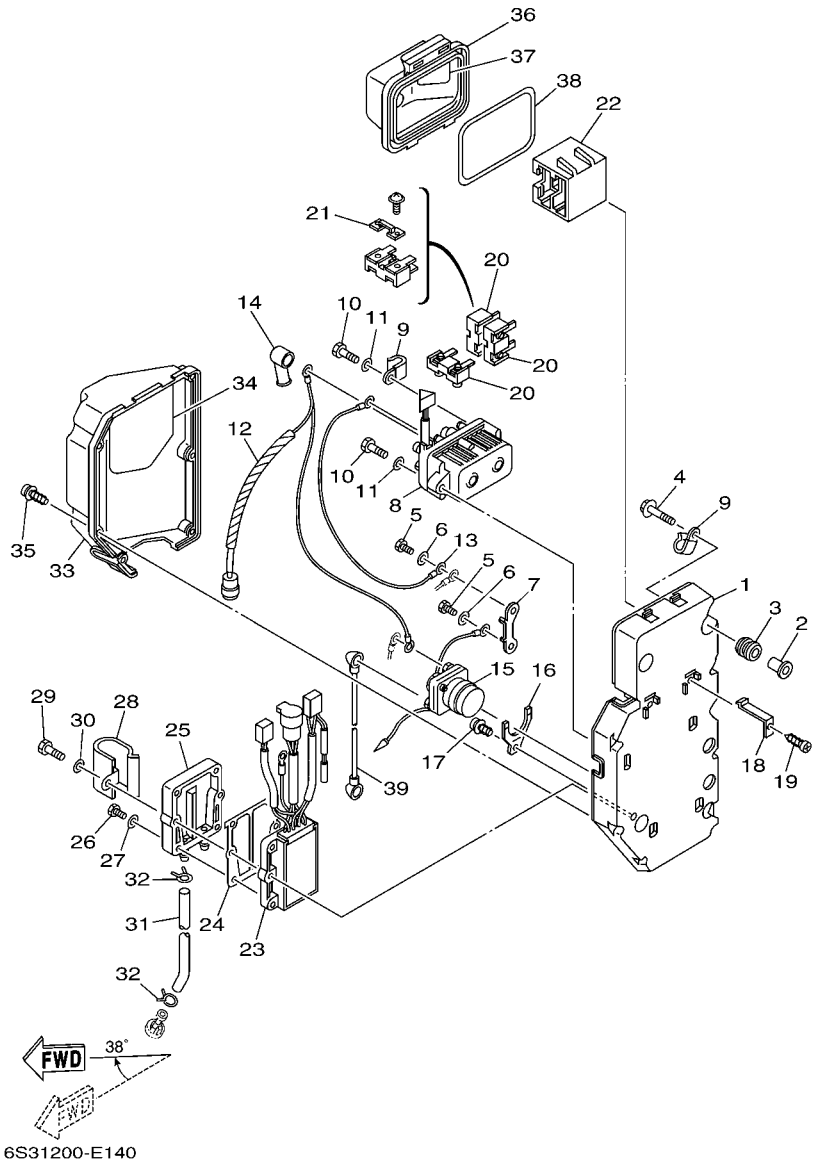

FIG. 14 ELECTRICAL 3 — EQUIPO ELECTRICO 3

REF. NO.	PART NO. CODIGO Nº	DESCRIPTION DESCRIPCION	6S33	6S43				REMARKS OBSERVACIONES
28	90462–08047	CLAMP BRIDA	1	1				
29	97013–06030	BOLT PERNO	2	2				
30	92903–06600	WASHER, PLATE RONDANA SENCILLA	2	2				
31	61A–24314–00	PIPE 4 TUBO 4	1	1				
32	90467–08M18	CLIP PRESILLA	2	2				
33	61A–81942–00	COVER CUBIERTA	1	1				
34	61A–81919–41	GRAPHIC, REGULATOR CALCAMONIA DE REGULADOR	1	1				
35	90169–05M00	SCREW, TRUSS HEAD TAPPING TORNILLO	6	6				
36	61A–82154–01	CASE CAJA	1	1				
37	61A–81919–00	GRAPHIC, REGULATOR CALCAMONIA DE REGULADOR	1	1				
38	61A–82176–00	DAMPER AMORTIGUADOR	1	1				
39	61A–82117–00	WIRE, LEAD CABLE CONDUCTOR	1	1				

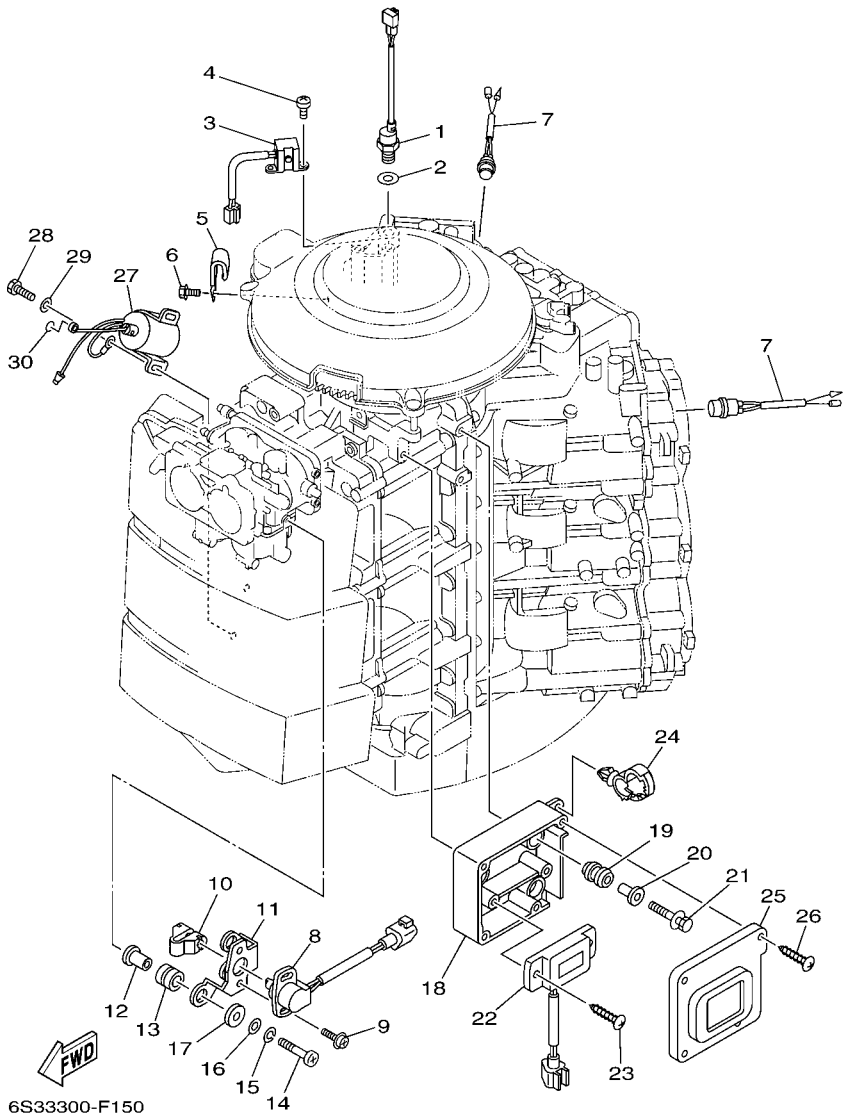

FIG. 15 ELECTRICAL 4 — EQUIPO ELECTRICO 4

REF. NO.	PART NO. CODIGO Nº	DESCRIPTION DESCRIPCION	6S33	6S43				REMARKS OBSERVACIONES
1	61A–85790–00	THERMOSENSOR ASSY TERMICA SENSORIO	1	1				
2	92990–10600	WASHER, PLATE ARANDELA PLANA	1	1				
3	61A–85895–00	CRANK POSITION SENDER SENSOR, POSICION DE CIGUENAL	1	1				
4	97885–05012	SCREW, PAN HEAD TORNILLO A MUESCA	2	2				
5	90465–06M88	CLAMP BRIDA	1	1				
6	97595–06512	BOLT, WITH WASHER PERNO CON ARANDELA	1	1				
7	688–82560–10	THERMO SWITCH ASSY INTER. DE TERMO	2	2				
8	61A–85885–00	THROTTLE SENSOR ASSY TERMICA SENSORIO	1	1				
9	90159–05M25	SCREW, WITH WASHER TORNILLO CON VALONA	2	2				
10	6K7–14573–00	LEVER PALANCA	1	1				
11	6K7–85886–01	SENSOR, AIR TEMPERATURE SENSOR	1	1				
12	90387–05M00	COLLAR ESPACIADOR	3	3				
13	60V–85516–00	SPACER ESPACIADOR	3	3				
14	97885–05025	SCREW, PAN HEAD TORNILLO A MUESCA	3	3				
15	92995–05100	WASHER ARANDELA	3	3				
16	92995–05600	WASHER ARANDELA	3	3				
17	90201–05660	WASHER, PLATE ARANDELA PLANA	3	3				
18	6S3–81948–00	BRACKET SOPORTE	1	1				
19	6A0–82317–00	DAMPER, IGNITION COIL AMORTIGUADOR BOBINA ENCENDIDO	3	3				
20	90387–06119	COLLAR ESPACIADOR	3	3				
21	90119–06M65	BOLT, WITH WASHER TORNILLO CON ARANDELA	3	3				
22	6Y5–83504–20	HOUR METER ASSY MEDIDOR DE HORAS COMPLETO	1	1				
23	90169–05M00	SCREW, TRUSS HEAD TAPPING TORNILLO	2	2				
24	90464–20181	CLAMP BRIDA	2	2				
25	6S3–81942–00	COVER CUBIERTA	1	1				
26	90169–05M00	SCREW, TRUSS HEAD TAPPING TORNILLO	4	4				
27	64E–86110–01	SOLENOID SOLENOIDE	1	1				

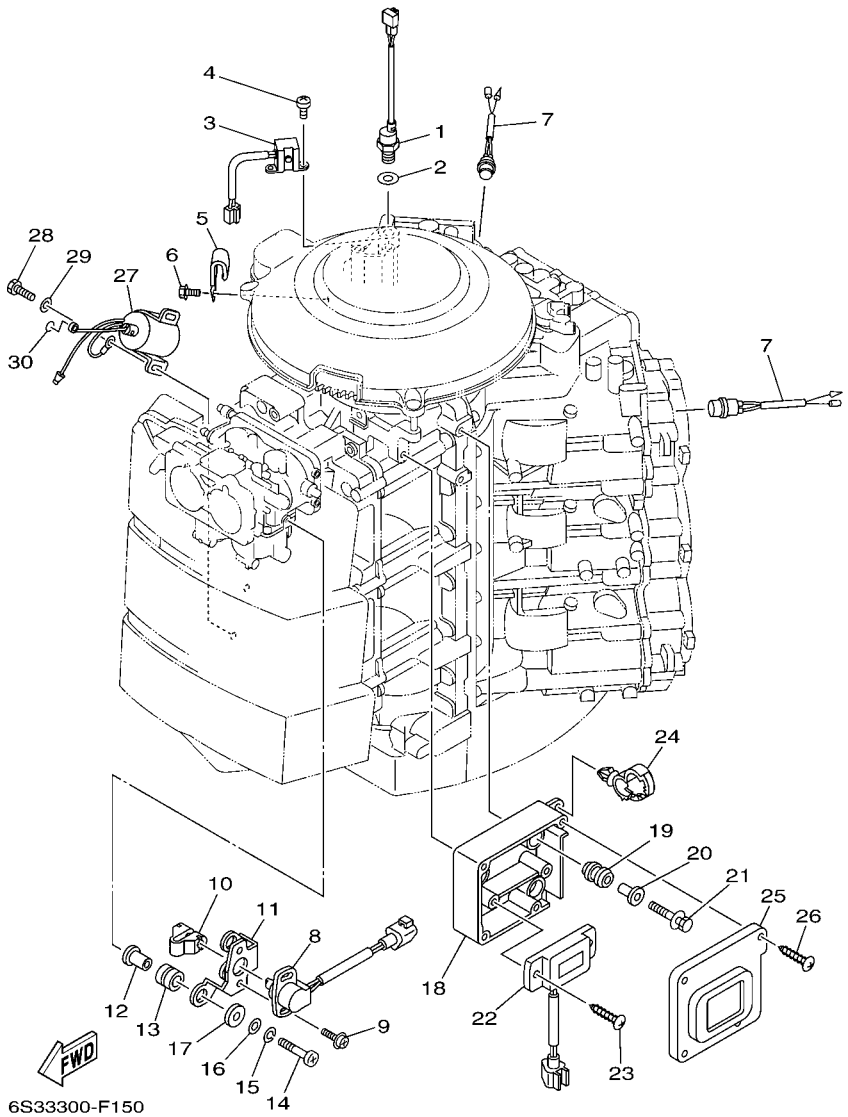

FIG. 15 ELECTRICAL 4 — EQUIPO ELECTRICO 4

REF. NO.	PART NO. CODIGO Nº	DESCRIPTION DESCRIPCION	6S33	6S43				REMARKS OBSERVACIONES
28	97095–06016	BOLT PERNO	2	2				
29	92995–06600	WASHER ARANDELA	2	2				
30	93210–03261	O-RING ANILLO O	1	1				

FIG. 16 STARTING MOTOR MOTOR DE ARRANQUE

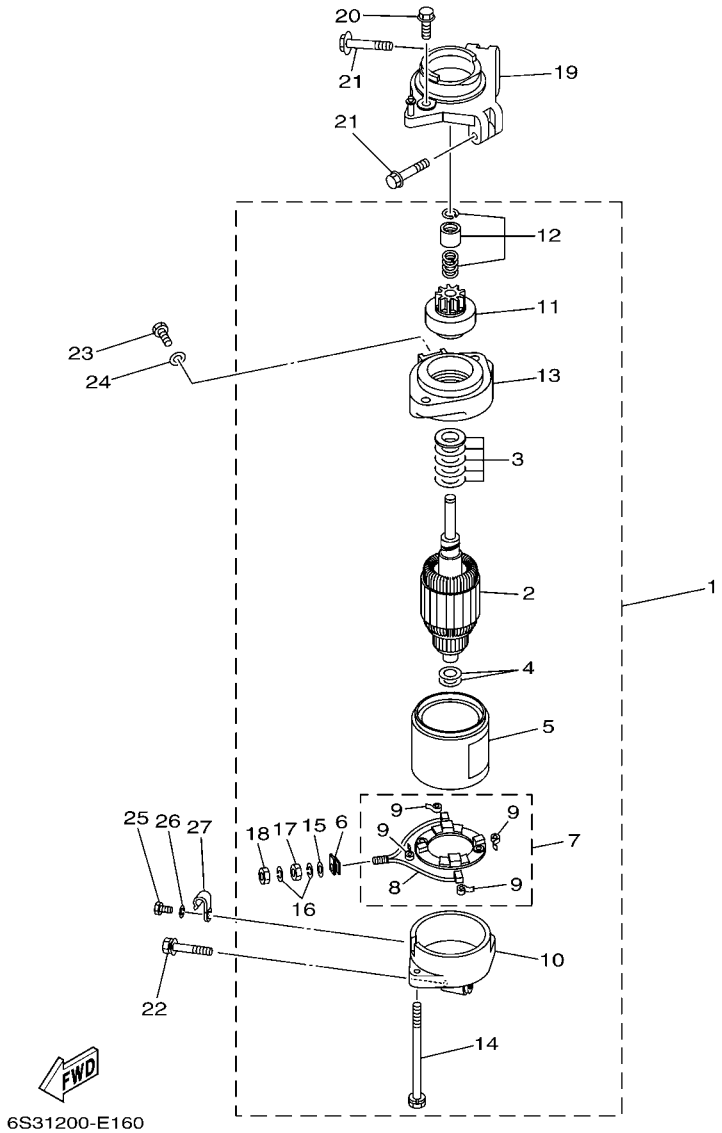

REF. NO.	PART NO. CODIGO Nº	DESCRIPTION DESCRIPCION	6S33	6S43				REMARKS OBSERVACIONES
1	6S3–81800–00	STARTING MOTOR ASSY MOTOR DE ARRANQUE COMPLETO	1	1				
2	6N7–81850–10	.ARMATURE ASSY .INDUCIDO COMPLETO	1	1				
3	61A–81809–00	.WASHER KIT .JUEGO DE ARANDELA	1	1				
4	61A–81824–00	.WASHER 2 .ARANDELA 2	2	2				
5	6N7–81810–00	.STATOR ASSY .ESTATOR COMPLETO	1	1				
6	6S3–8182G–00	.BUSH, TERMINAL .BUJE DE TERMINAL	1	1				
7	6N7–81840–00	.BRUSH HOLDER ASSY .SOSTEN DE ESCOBILLA COMPLETO	1	1				
8	6N7–81801–00	..BRUSH SET ..JUEGO DE ESCOBILLA	1	1				
9	6N7–81813–00	..SPRING, BRUSH ..RESORTE DE ESCOBILLA	4	4				
10	6S3–81820–00	.REAR BRACKET ASSY .CUBIERTA TRASERA COMPL	1	1				
11	69W–81807–00	.GEAR ASSY, STARTING MOTOR .PINON CONJUNTO	1	1				
12	6N7–81857–00	.RETAINER .SEGURO	1	1				
13	6N7–81830–00	.FRONT BRACKET ASSY .SOPORTE DELANTERO COMPLETO	1	1				
14	6K7–81826–10	.BOLT .PERNO	2	2				
15	6E5–8182E–10	.WASHER .RONDANA	1	1				
16	6E5–8182F–10	.WASHER .RONDANA	2	2				
17	6E5–8182A–10	.NUT .TUERCA	1	1				
18	6E5–8182K–10	.NUT .TUERCA	1	1				
19	61A–81822–00–94	BRACKET, STARTING MOTOR SOPORTE DE MOTOR DE ARRANQUE	1	1				
20	90119–08M76	BOLT, WITH WASHER TORNILLO CON ARANDELA	2	2				
21	90119–08M77	BOLT, WITH WASHER TORNILLO CON ARANDELA	2	2				
22	90119–08M57	BOLT, WITH WASHER TORNILLO CON ARANDELA	1	1				
23	97095–08016	BOLT PERNO	1	1				
24	92995–08600	WASHER ARANDELA	1	1				
25	97095–06012	BOLT PERNO	1	1				
26	92995–06600	WASHER ARANDELA	1	1				
27	90465–06M86	CLAMP BRIDA	1	1				

FIG. 17 BOTTOM COWLING CUBIERTA INFERIOR

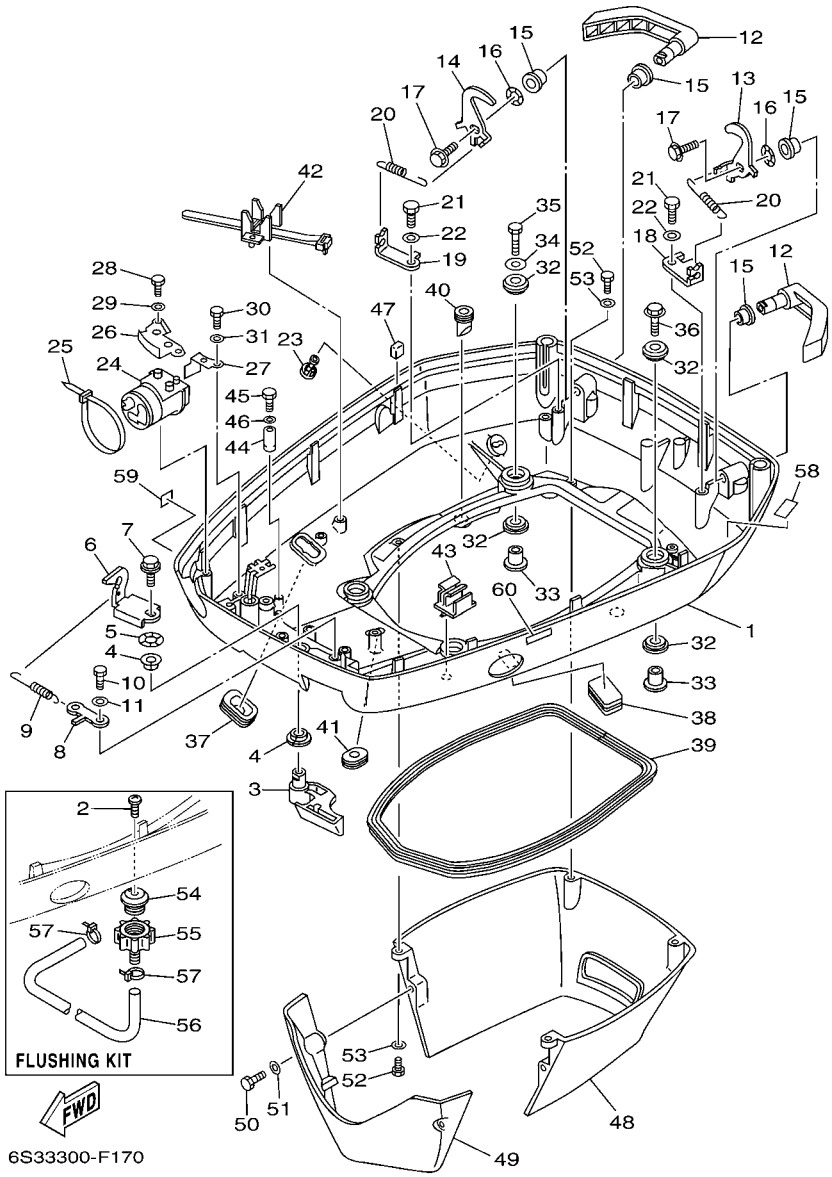

REF. NO.	PART NO. CODIGO Nº	DESCRIPTION DESCRIPCION	6S33	6S43				REMARKS OBSERVACIONES
1	6S3–42711–01–8D	COWLING, BOTTOM 1 CUBIERTA INFERIOR 1	1	1				
2	90169–05M00	SCREW, TRUSS HEAD TAPPING TORNILLO	1	1				FLUSHING KIT FLUSHING KIT
3	61A–42815–10–8D	LEVER, CLAMP PALANCA ABRAZADERA	1	1				
4	90386–13M88	BUSH BUJE	2	2				
5	90206–13M10	WASHER, WAVE ARANDELA ONDULADA	1	1				
6	6S3–42816–00	LEVER, CLAMP PALANCA ABRAZADERA	1	1				
7	90119–08032	BOLT, WITH WASHER TORNILLO CON ARANDELA	1	1				
8	6S3–42812–00	SPRING, HOOK RESORTE GANCHO	1	1				
9	90506–18M40	SPRING, TENSION RESORTE DE TENSION	1	1				
10	97095–06016	BOLT PERNO	1	1				
11	92995–06600	WASHER ARANDELA	1	1				
12	6S3–42817–01–8D	LEVER, CLAMP PALANCA ABRAZADERA	2	2				
13	6S3–42818–00	LEVER, CLAMP PALANCA, ABRAZADERA	1	1				
14	6S3–42819–00	LEVER, CLAMP PALANCA ABRAZADERA	1	1				
15	90386–13M38	BUSH BUJE	4	4				
16	90206–13M10	WASHER, WAVE ARANDELA ONDULADA	2	2				
17	90119–06M09	BOLT, WITH WASHER TORNILLO CON ARANDELA	2	2				
18	6S3–49511–00	HOOK, SPRING GANCHO	1	1				
19	6S3–43144–00	HOOK, SPRING GANCHO	1	1				
20	90506–18009	SPRING, TENSION RESORTE DE TENSION	2	2				
21	97095–06016	BOLT PERNO	2	2				
22	92995–06600	WASHER ARANDELA	2	2				
23	6E5–44391–00	NIPPLE, HOSE NIPLE MANGUERA	1	1				
24	61A–42725–12	GROMMET TAPON	1	1				
25	90465–13M30	CLAMP BRIDA	1	1				
26	61A–42738–02–5B	PLATE, FITTING PLACA DE AJUSTE	1	1				
27	64D–42738–10–5B	PLATE, FITTING PLACA DE AJUSTE	1	1				

FIG. 17 BOTTOM COWLING CUBIERTA INFERIOR

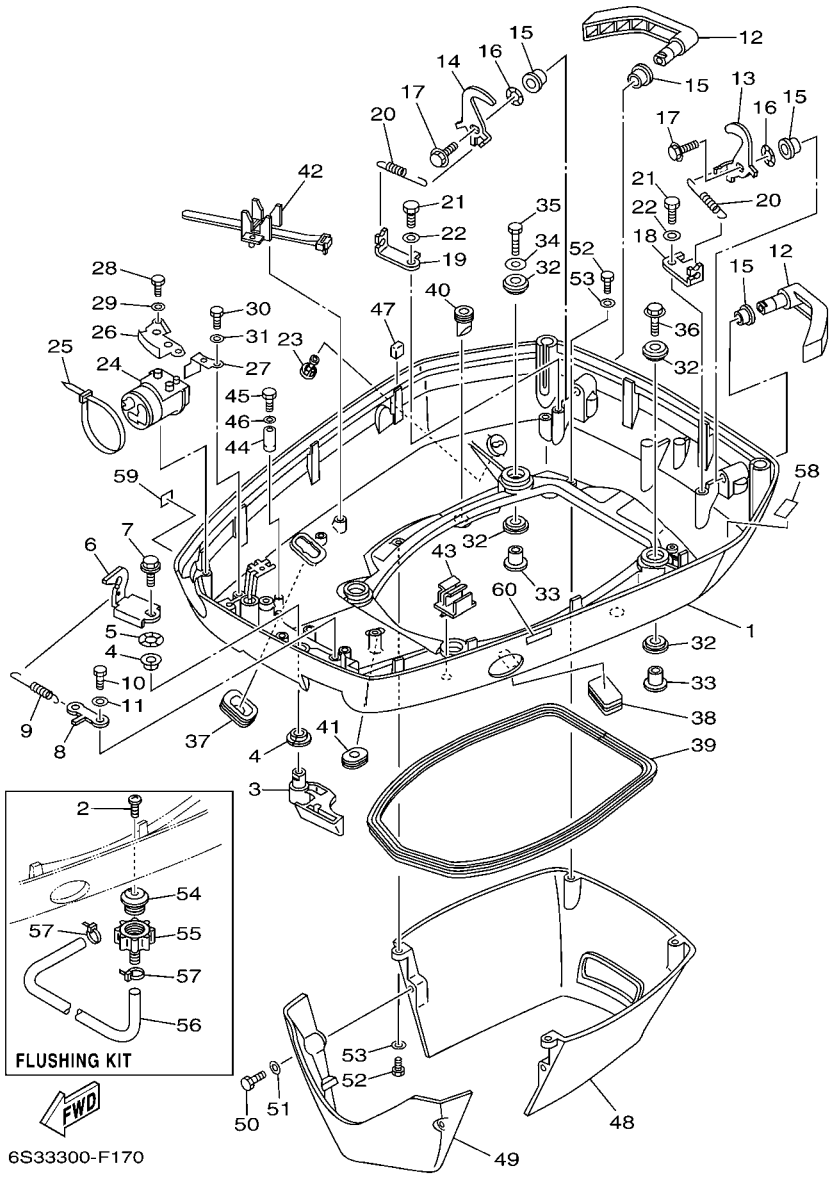

REF. NO.	PART NO. CODIGO Nº	DESCRIPTION DESCRIPCION	6S33	6S43				REMARKS OBSERVACIONES
28	97095–06016	BOLT PERNO	2	2				
29	92995–06600	WASHER ARANDELA	2	2				
30	97095–06012	BOLT PERNO	1	1				
31	92995–06600	WASHER ARANDELA	1	1				
32	90480–22M81	GROMMET TAPON	8	8				
33	90387–08M37	COLLAR ESPACIADOR	4	4				
34	90201–08M54	WASHER, PLATE ARANDELA PLANA	1	1				
35	97075–08035	BOLT PERNO	1	1				
36	90119–08M22	BOLT, WITH WASHER TORNILLO CON ARANDELA	3	3				
37	688–42726–10	GROMMET TAPON	1	1				
38	6H4–42726–00	GROMMET TAPON	1	1				
39	61A–42716–00	RUBBER, SEAL 1 SELLO DE GOMA 1	1	1				
40	61A–42717–00	RUBBER, SEAL 2 GOMA	4	4				
41	61A–42727–00	GROMMET TAPON	1	1				
42	688–82594–00	CLAMP GRAMPA	1	1				
43	6E5–82594–00	CLAMP GRAMPA	1	1				
44	6E5–82588–00	PLATE PLACA	1	1				
45	97095–06020	BOLT PERNO	1	1				
46	92995–06600	WASHER ARANDELA	1	1				
47	6G1–43318–01	COVER CUBIERTA	10	10				
48	61A–42741–01–8D	APRON MANDIL	1	1				
49	61A–42771–01–8D	APRON MANDIL	1	1				
50	97095–06030	BOLT PERNO	2	2				
51	92995–06600	WASHER ARANDELA	2	2				
52	97095–06020	BOLT PERNO	4	4				
53	92995–06600	WASHER ARANDELA	4	4				
54	6R3–12572–00	ADAPTER ADAPTADOR	1	1				FLUSHING KIT FLUSHING KIT

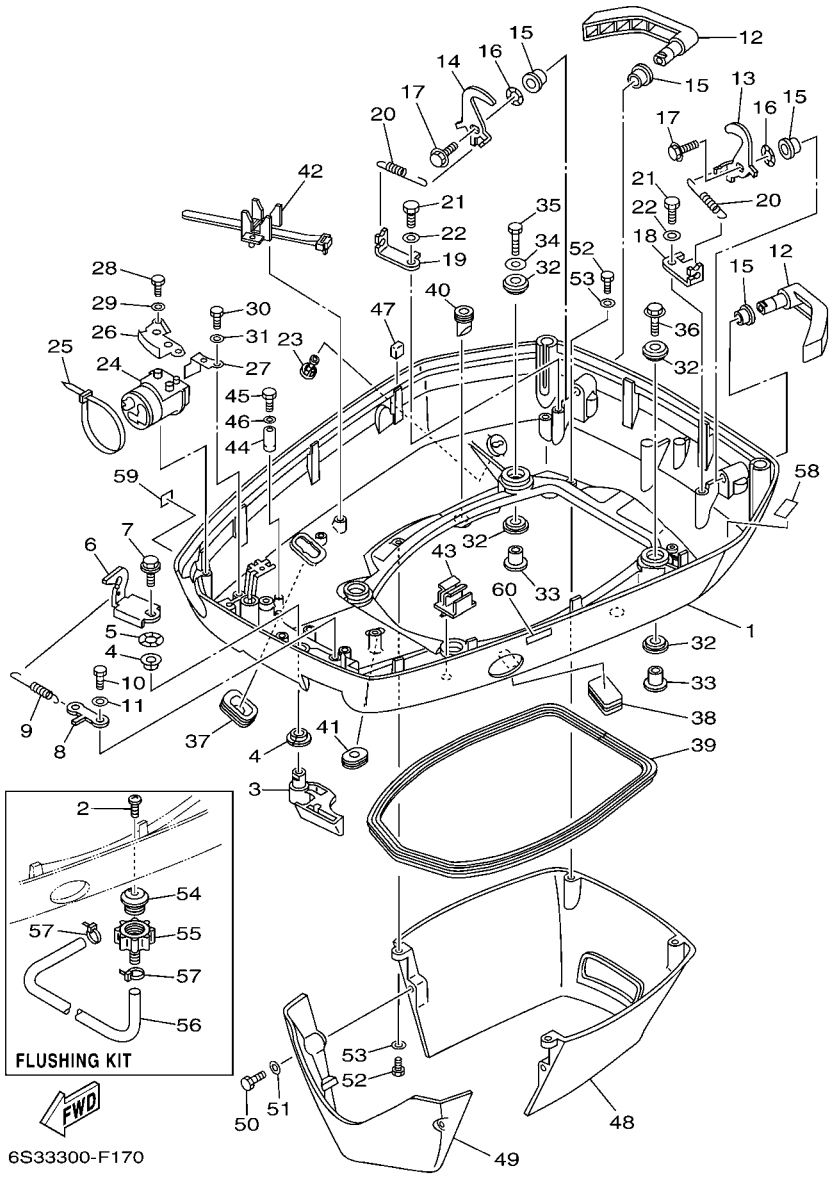

FIG. 17 BOTTOM COWLING CUBIERTA INFERIOR

REF. NO.	PART NO. CODIGO Nº	DESCRIPTION DESCRIPCION	6S33	6S43				REMARKS OBSERVACIONES
55	6R3–12580–00	JOINT ASSY ACOPLAR COMP.	1	1				FLUSHING KIT FLUSHING KIT
56	90445–11M36	HOSE (L: 620) TUBO (L: 620)	1	1				FLUSHING KIT FLUSHING KIT
57	90465–11M10	CLAMP BRIDA	2	2				FLUSHING KIT FLUSHING KIT
58	6G5–42791–10	MARK 1 MARCA 1	1	1				
59	6A1–28176–00	LABEL, CAUTION ETIQUETA DE PRECAUCION	1	1				FOR CAR FOR CAR
60	6E3–8257H–00	PLATE, MARK PLACA DE MARCA	1	1				FOR CAR FOR CAR

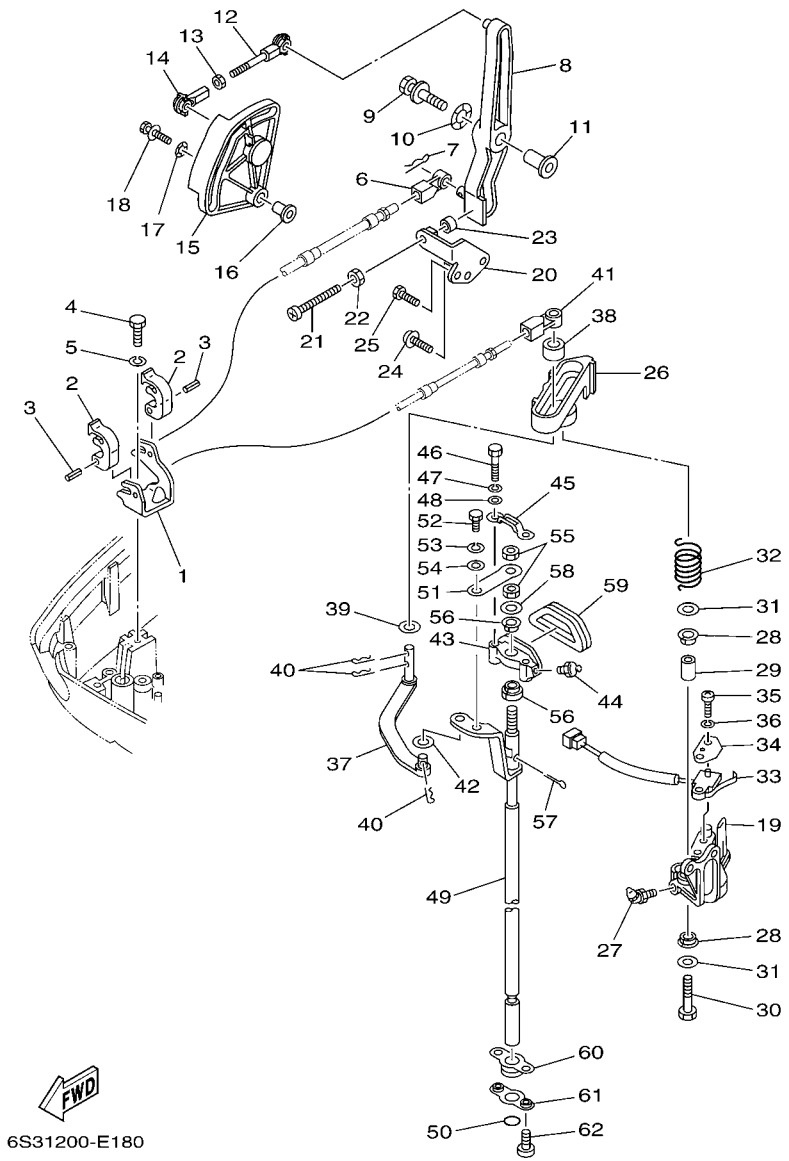

FIG. 18 CONTROL — CONTROL

REF. NO.	PART NO. CODIGO Nº	DESCRIPTION DESCRIPCION	6S33	6S43				REMARKS OBSERVACIONES
1	61A–48531–00	BRACKET, REMOTE CONTROL 1 SOPORTE DE CONTROL REMOTO	1	1				
2	6E5–48538–00	CLAMP, CABLE GRAMPA DE CABLE	2	2				
3	91690–30012	PIN, SPRING PASADOR DE RESORTE	2	2				
4	97095–08020	BOLT PERNO	1	1				
5	92995–08100	WASHER ARANDELA	1	1				
6	6E5–48344–00	CABLE END, REMOTE CONTROL BASE CONTROL	1	1				
7	90468–18008	CLIP PRESILLA	1	1				
8	6S3–41632–00	LEVER, MAGNETO CONTROL PALANCA DE CONTROL DE MAGNETO	1	1				
9	90119–08062	BOLT, WITH WASHER TORNILLO CON ARANDELA	1	1				
10	90206–12M00	WASHER, WAVE ARANDELA ONDULADA	1	1				
11	90387–08664	COLLAR ESPACIADOR	1	1				
12	6K7–41211–00	LINK, ACCEL. ESLABON, ACELERADOR	1	1				
13	95380–05600	NUT TUERCA	1	1				
14	6H4–41237–00	JOINT, LINK CONECTOR	1	1				
15	6S3–41230–00	CAM ACCELERATOR COMP LEVA ACELE COMPL.	1	1				
16	90387–06M29	COLLAR ESPACIADOR	1	1				
17	90206–10036	WASHER, WAVE ARANDELA ONDULADA	1	1				
18	90119–06M17	BOLT, WITH WASHER TORNILLO CON ARANDELA	1	1				
19	61A–44117–01–1S	BRACKET SOPORTE	1	1				
20	6S3–42744–00	STAY SOPORTE	1	1				
21	90157–06M11	SCREW, PAN HEAD TORNILLO CABEZA CONICA PLANA	1	1				
22	95380–06600	NUT, HEXAGON TUERCA	1	1				
23	688–44194–00	CAP TAPA	1	1				
24	90159–05M12	SCREW, WITH WASHER TORNILLO CON VALONA	1	1				
25	97095–06020	BOLT PERNO	2	2				
26	61A–44176–00–1S	BRACKET SOPORTE	1	1				
27	93700–06M01	NIPPLE, GREASE BOQUILLA DE ENGRASAR	1	1				

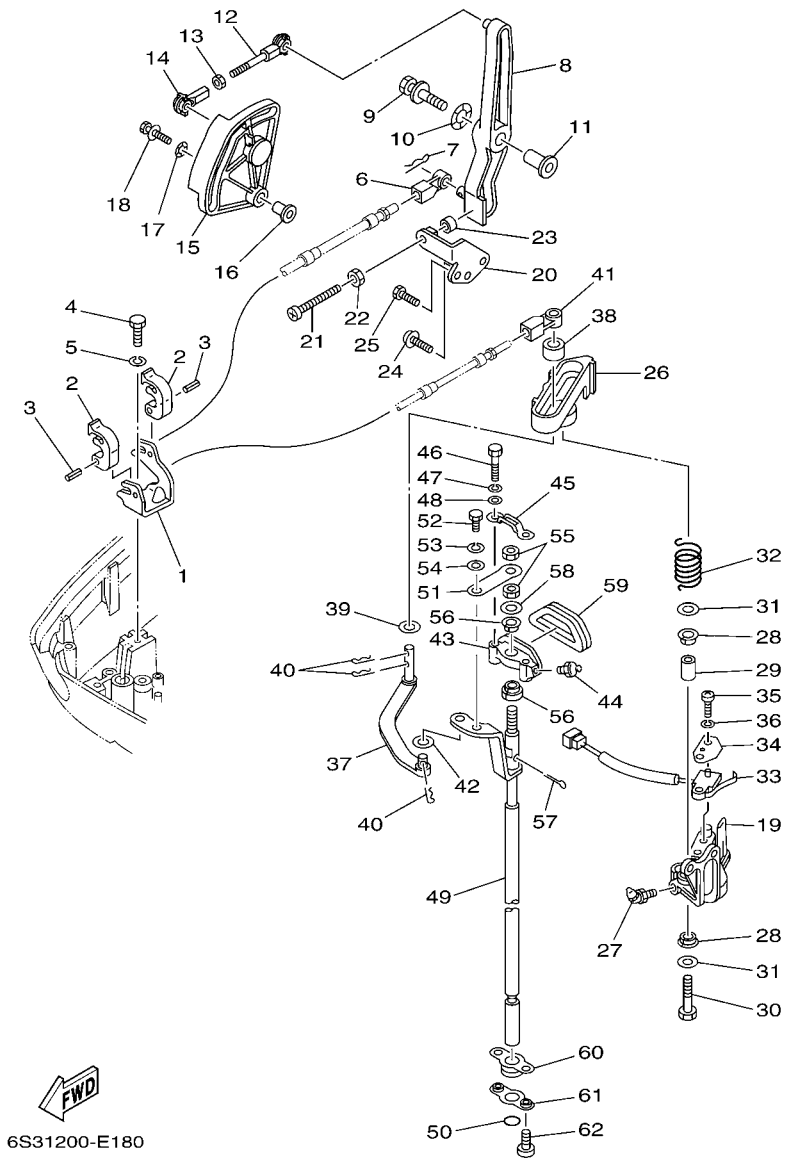

FIG. 18 CONTROL — CONTROL

REF. NO.	PART NO. CODIGO Nº	DESCRIPTION DESCRIPCION	6S33	6S43				REMARKS OBSERVACIONES
28	90386–12069	BUSH BUJE	2	2				
29	90387–08M09	COLLAR ESPACIADOR	1	1				
30	97095–08035	BOLT PERNO	1	1				
31	92995–08200	WASHER ARANDELA	2	2				
32	90508–20M31	SPRING, TORSION RESORTE DE TORSION	1	1				
33	61A–8259F–00	SWITCH ASSY INTERRUPTOR	1	1				
34	61A–82588–01	PLATE PLACA	1	1				
35	97885–04016	SCREW, PAN HEAD TORNILLO A MUESCA	2	2				
36	92995–04100	WASHER ARANDELA	2	2				
37	61A–44121–00	LEVER, SHIFT ROD PALANCA VARILLA CAMBIOS	1	1				
38	6E5–44122–00	BUSHING, SHIFT ROD LEVER BUJE PALANCA VARILLA DE CAMBIO	1	1				
39	90202–08M20	WASHER, PLATE ARANDELA DE PLANA	1	1				
40	90468–18008	CLIP PRESILLA	3	3				
41	6E5–48344–00	CABLE END, REMOTE CONTROL BASE CONTROL	1	1				
42	90202–06007	WASHER, PLATE ARANDELA DE PLANA	1	1				
43	61A–44118–00–8D	BRACKET SOPORTE	1	1				
44	93700–06M03	NIPPLE, GREASE BOQUILLA DE ENGRASAR	1	1				
45	61A–44116–00	SPRING RESORTE	1	1				
46	97095–06030	BOLT PERNO	2	2				
47	92995–06100	WASHER, SPRING ARANDELA	2	2				
48	92995–06600	WASHER ARANDELA	2	2				
49	61A–44120–23	HANDLE GEAR SHIFT ASSY MANIJA DE CAMBIO COMPL	1	1				X(25.3") X(25.3")
	61A–44120–33	HANDLE GEAR SHIFT ASSY MANIJA DE CAMBIO COMPL	1	1				U(30.2") U(30.2")
50	93210–09165	O-RING ANILLO O	1	1				
51	61A–44112–00	STAY, HANDLE GEAR SHIFT SOPORTE HANIJA DE CABIO DE MAR	1	1				
52	97013–06012	BOLT PERNO	1	1				
53	92903–06100	WASHER, SPRING RONDANA SENCILLA	1	1				

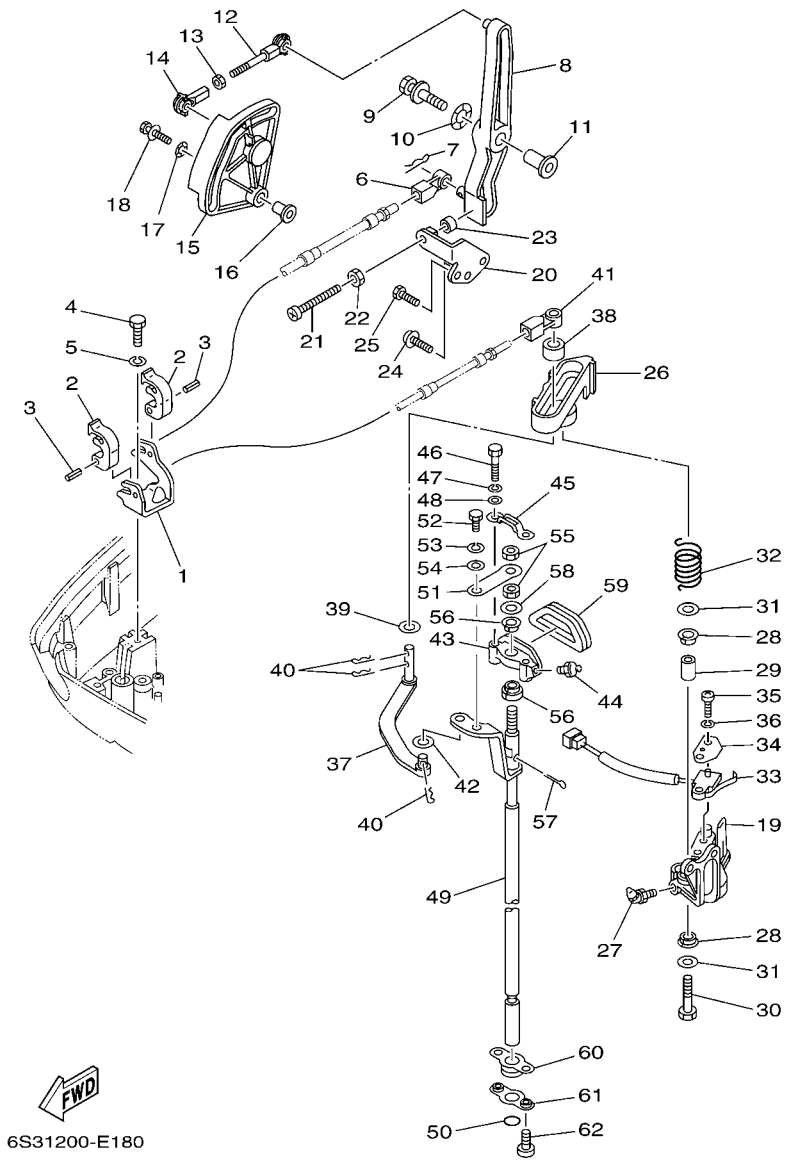

FIG. 18 CONTROL — CONTROL

REF. NO.	PART NO. CODIGO Nº	DESCRIPTION DESCRIPCION	6S33	6S43				REMARKS OBSERVACIONES
54	92903–06600	WASHER, PLATE RONDANA SENCILLA	1	1				
55	95313–08600	NUT TUERCA	2	2				
56	90386–90M90	BUSH BUJE	2	2				
57	91490–20012	PIN, COTTER CHAVETA	1	1				
58	90201–09M02	WASHER, PLATE ARANDELA PLANA	1	1				
59	61A–15315–00	SEAL, CRANKCASE SELLO DE CARTER	1	1				
60	61A–42724–00	GROMMET TAPON	1	1				
61	61A–44138–00	WASHER ARANDELA	1	1				
62	97885–06008	SCREW, PAN HEAD TORNILLO A MUESCA	2	2				

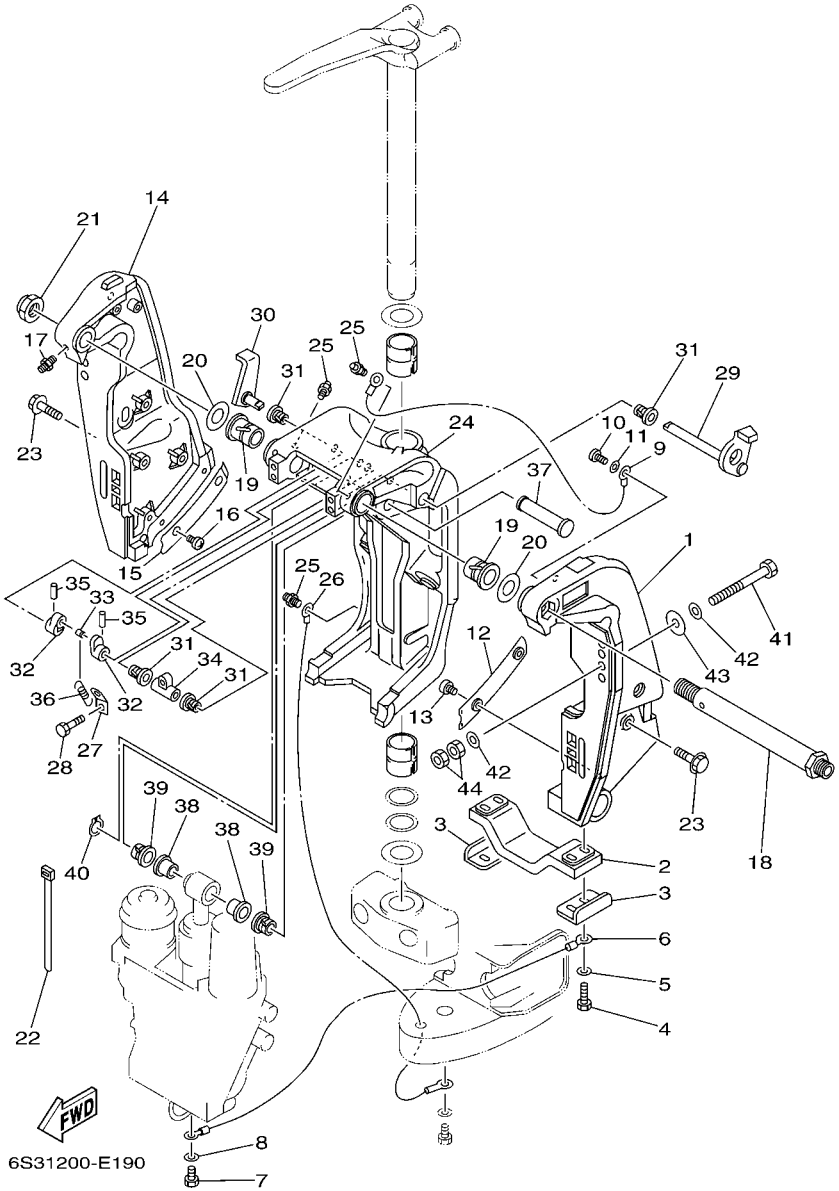

FIG. 19 BRACKET 1 SOPORTE 1

REF. NO.	PART NO. CODIGO Nº	DESCRIPTION DESCRIPCION	6S33	6S43				REMARKS OBSERVACIONES
1	69J–43111–01–8D	BRACKET, CLAMP 1 SOPORTE DE LA ABRAZADERA 1	1	1				
2	6G5–45251–02	ANODE CATODE	1	1				
3	6G5–44526–00	PLATE PLACA 1	2	2				
4	97095–06025	BOLT PERNO	4	4				
5	92995–06600	WASHER ARANDELA	4	4				
6	6H1–82148–00	WIRE, LEAD 4 CABLE CONDUCTOR 4	1	1				
7	97095–06010	BOLT PERNO	1	1				
8	92995–06600	WASHER ARANDELA	1	1				
9	6E5–82148–00	WIRE, LEAD 4 CABLE CONDUCTOR 4	1	1				
10	97885–06012	SCREW, PAN HEAD TORNILLO A MUESCA	1	1				
11	92995–06600	WASHER ARANDELA	1	1				
12	61A–43132–00	WASHER, FRICTION ARANDELA DE FRICCION	1	1				
13	97885–06010	SCREW, PAN HEAD TORNILLO A MUESCA	2	2				
14	69J–43112–01–8D	BRACKET, CLAMP 2 SOPORTE DE LA ABRAZADERA 2	1	1				
15	61A–43133–00	WASHER,FRICTION RONDANA	1	1				
16	97885–06010	SCREW, PAN HEAD TORNILLO A MUESCA	2	2				
17	93700–06M03	NIPPLE, GREASE BOQUILLA DE ENGRASAR	1	1				
18	6R3–43131–00	BOLT, CLAMP BRACKET TORNILLO DE ABRAZADERA DEL SOP	1	1				
19	90386–25M31	BUSH BUJE	2	2				
20	90201–26M59	WASHER, PLATE ARANDELA PLANA	2	2				
21	90185–22M11	NUT, SELF-LOCKING TUERCA AUTOBLOCANTE	1	1				
22	90465–11M10	CLAMP BRIDA	2	2				
23	90119–10024	BOLT, WITH WASHER TORNILLO CON ARANDELA	8	8				
24	61A–43311–21–8D	BRACKET, SWIVEL 1 SOPORTE GIRATORIO 1	1	1				X(25.3") X(25.3")
	61A–43311–31–8D	BRACKET, SWIVEL 1 SOPORTE GIRATORIO 1	1	1				U(30.2") U(30.2")
25	93700–06M03	NIPPLE, GREASE BOQUILLA DE ENGRASAR	5	5				
26	61A–82147–20	WIRE, LEAD 4 CABLE CONDUCTOR 4	1	1				X(25.3") X(25.3")

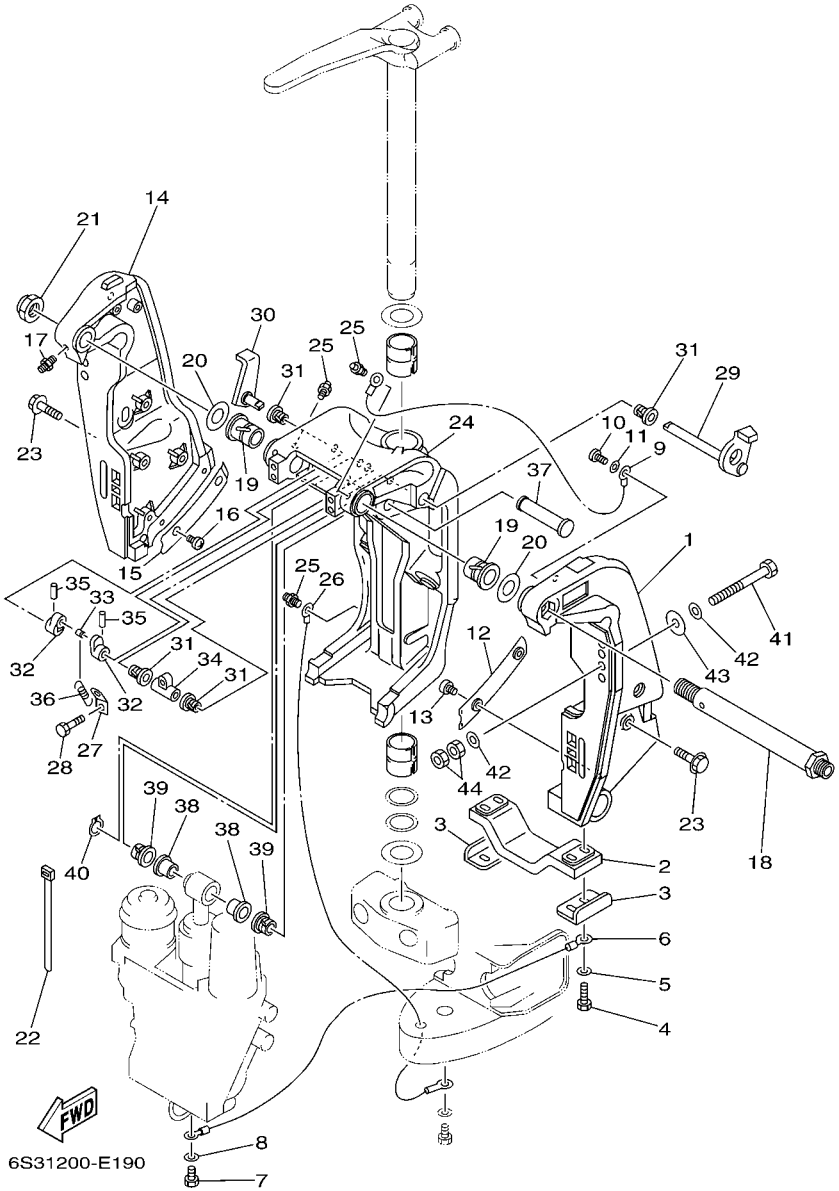

FIG. 19 BRACKET 1 SOPORTE 1

REF. NO.	PART NO. CODIGO Nº	DESCRIPTION DESCRIPCION	6S33	6S43				REMARKS OBSERVACIONES
26	61A–82147–30	WIRE, LEAD 4 CABLE CONDUCTOR 4	1	1				U(30.2") U(30.2")
27	6G5–43144–00	HOOK, SPRING GANCHO	1	1				
28	97095–06010	BOLT PERNO	1	1				
29	61A–43181–01	LEVER, TILT STOP PALANCA TOPE INCLINACION	1	1				
30	6G5–43185–02	LEVER, TILT STOP PALANCA TOPE INCLINACION	1	1				
31	90386–10M16	BUSH BUJE	4	4				
32	6G5–43148–00	COLLAR, DISTANCE COLLAR	2	2				
33	90249–06M19	PIN PASADOR	1	1				
34	90387–10M02	COLLAR ESPACIADOR	1	1				
35	91690–30020	PIN, SPRING PASADOR DE RESORTE	2	2				
36	90506–16003	SPRING, TENSION RESORTE DE TENSION	1	1				
37	6E5–43126–02	PIN, UPPER SHOCK MOUNT PASADOR DE AMORTIGUADOR SUPERI	1	1				
38	90386–18M63	BUSH BUJE	2	2				
39	90386–18M14	BUSH BUJE	2	2				
40	93410–18M02	CIRCLIP SEGURO	1	1				
41	90101–12M05	BOLT (L:130MM) TORNILLO (L:130MM)	4	4				
42	90201–13M01	WASHER, PLATE ARANDELA PLANA	8	8				
43	90201–12M05	WASHER, PLATE ARANDELA PLANA	4	4				
44	95380–12600	NUT TUERCA	8	8				

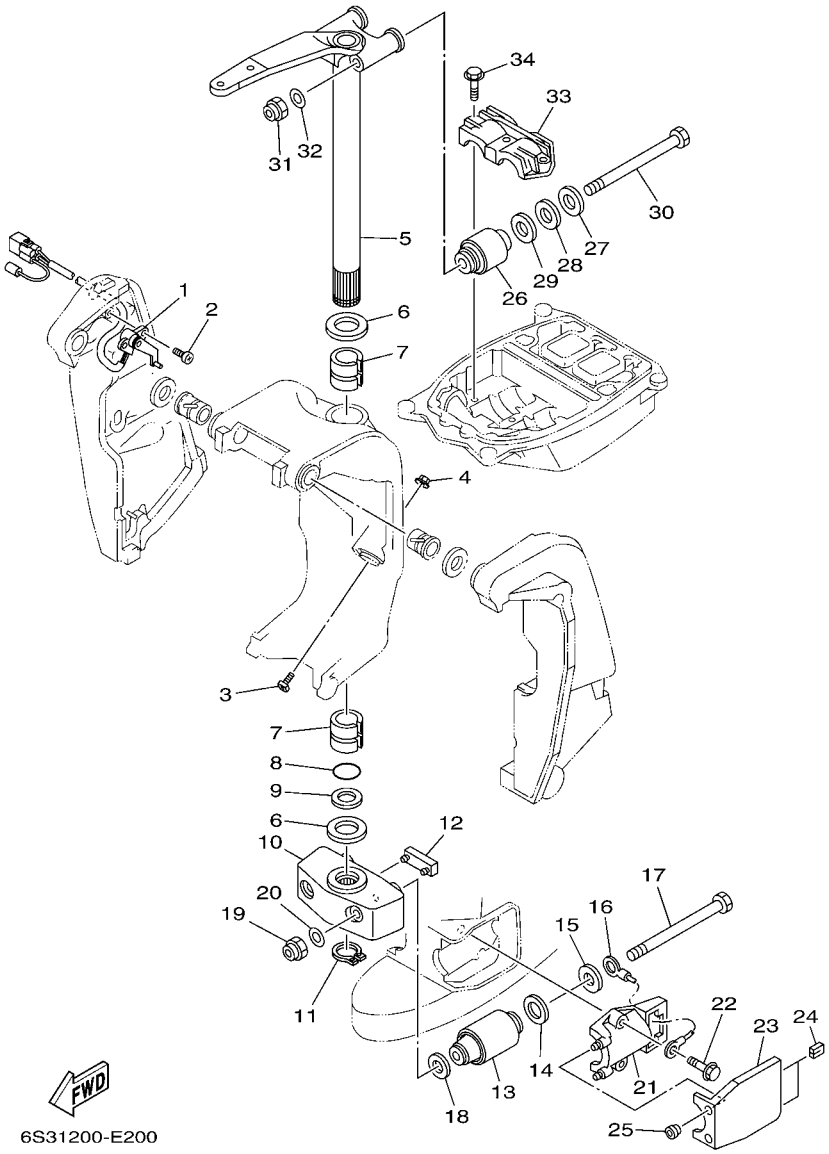

FIG. 20 BRACKET 2 SOPORTE 2

REF. NO.	PART NO. CODIGO Nº	DESCRIPTION DESCRIPCION	6S33	6S43				REMARKS OBSERVACIONES
1	69J–83672–00	TRIM SENDER TRANSMISOR DE INCLINADOR	1	1				
2	97885–06016	SCREW, PAN HEAD TORNILLO A MUESCA	2	2				
3	61A–43376–00	BOLT, THRUST RECEIVER TORNILLO RECEPTOR	2	2				
4	95780–10300	NUT, FLANGE TUERCA	2	2				
5	69J–42510–00–8D	STEERING BRACKET ASSY SOPORTE DIRECCION COMPL.	1	1				X(25.3") X(25.3")
	61A–42510–31–8D	STEERING BRACKET ASSY SOPORTE DIRECCION COMPL.	1	1				U(30.2") U(30.2")
6	90201–40M00	WASHER, PLATE ARANDELA PLANA	2	2				
7	90386–39M89	BUSH BUJE	2	2				
8	93210–35321	O-RING ANILLO O	1	1				
9	90202–40M47	WASHER, PLATE ARANDELA DE PLANA	1	1				
10	61A–44551–01–8D	HOUSING, LOWER MOUNT RUBBER CAJA AMORTIGUADOR INFERIOR HU	1	1				
11	93410–37M04	CIRCLIP SEGURO	1	1				
12	61A–44575–00	DAMPER, LOWER MOUNT RUBBER AMORTIGUADOR INFERIOR	1	1				
13	60V–44555–00–94	MOUNT DAMPER, LOWER SIDE AMORTIGUADOR DE HULE LADO INFE	2	2				
14	90202–32M19	WASHER, PLATE ARANDELA DE PLANA	2	2				
15	90201–16016	WASHER, PLATE ARANDELA PLANA	2	2				
16	6E5–82149–00	WIRE, LEAD 3 CABLE CONDUCTOR 3	1	1				
17	90101–14002	BOLT TORNILLO	2	2				
18	90201–15M58	WASHER, PLATE ARANDELA PLANA	2	2				
19	95380–14800	NUT TUERCA	2	2				
20	92995–14600	WASHER ARANDELA	2	2				
21	61A–44552–01–94	HOUSING, LOWER MOUNT RUBBER CAJA AMORTIGUADOR INFERIOR HU	2	2				
22	90119–10024	BOLT, WITH WASHER TORNILLO CON ARANDELA	4	4				
23	61A–44553–02–8D	COVER, LOWER MOUNT CUBIERTA,AMORTIGUADOR INFERIOR	2	2				
24	6S3–15789–01	DAMPER AMORTIGUADOR	4	4				
25	6A0–15789–00	DAMPER AMORTIGUADOR	4	4				
26	60V–44514–00–94	MOUNT DAMPER, UPPER SIDE AMORTIGUADOR LADO SUPERIOR	2	2				

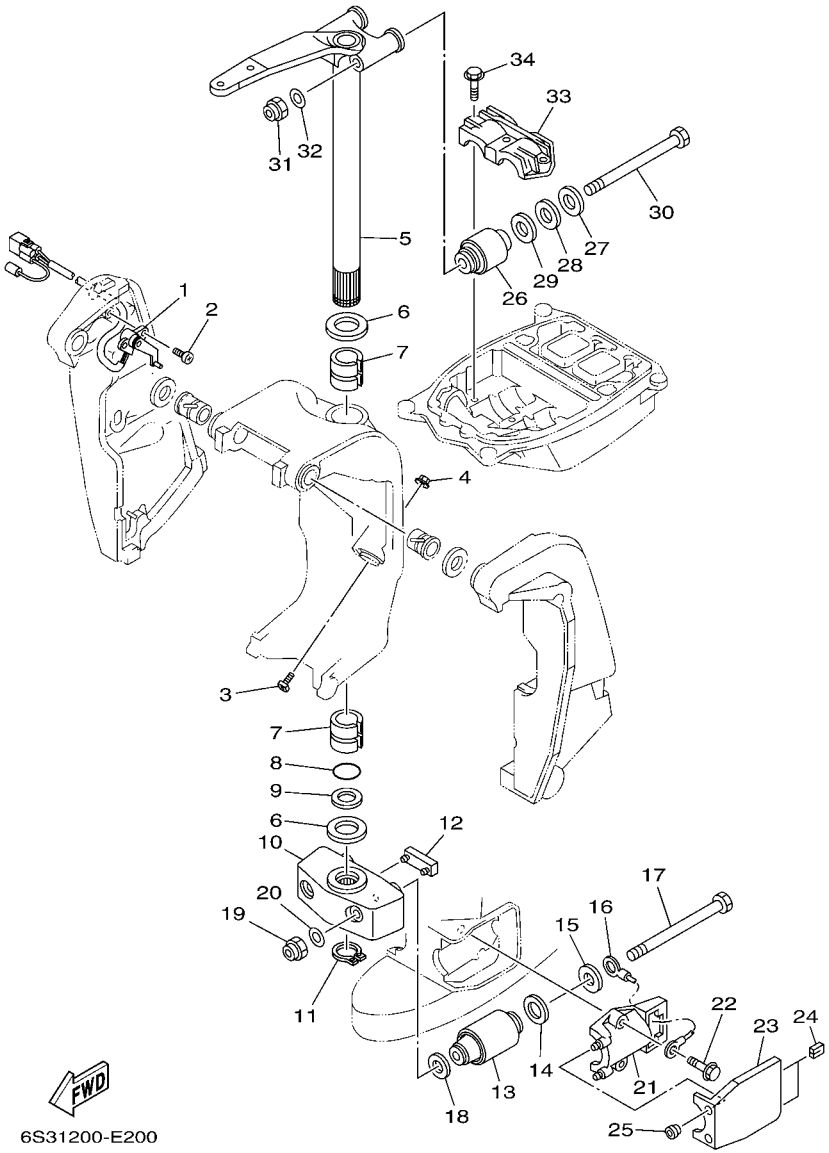

FIG. 20 BRACKET 2 SOPORTE 2

REF. NO.	PART NO. CODIGO Nº	DESCRIPTION DESCRIPCION	6S33	6S43				REMARKS OBSERVACIONES
27	90201–16015	WASHER, PLATE ARANDELA PLANA	2	2				
28	90202–28M46	WASHER, PLATE ARANDELA DE PLANA	2	2				
29	90201–28M01	WASHER, PLATE ARANDELA PLANA	2	2				
30	90101–14003	BOLT TORNILLO	2	2				
31	90185–14M00	NUT, SELF-LOCKING TUERCA AUTOBLOCANTE	2	2				
32	92995–14600	WASHER ARANDELA	2	2				
33	61A–44511–00–94	COVER, UPPER MOUNT CUBIERTA AMORTIGUADOR SUPERIOR	1	1				
34	90119–10024	BOLT, WITH WASHER TORNILLO CON ARANDELA	3	3				

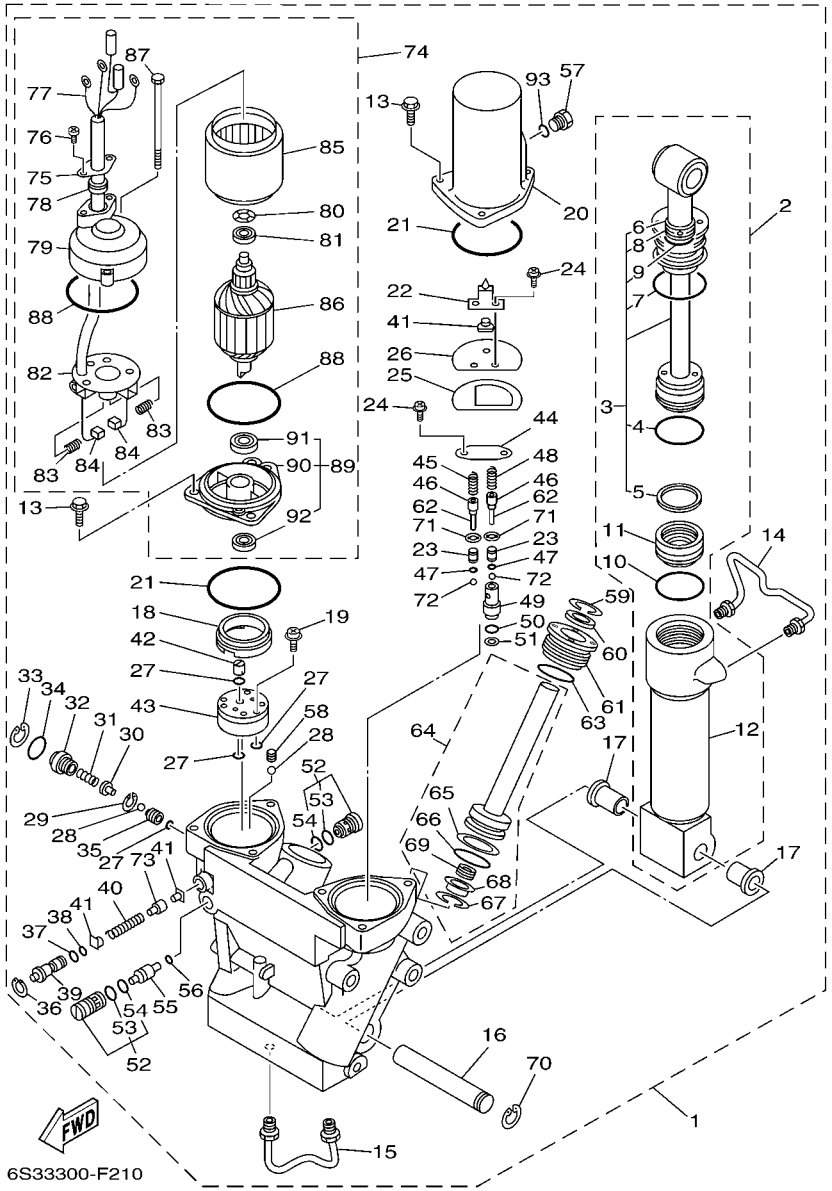

FIG. 21 POWER TRIM & TILT ASSY COMPONER Y PODER VARILLA

REF. NO.	PART NO. CODIGO Nº	DESCRIPTION DESCRIPCION	6S33	6S43				REMARKS OBSERVACIONES
1	61A–43800–25–4D	POWER TRIM & TILT ASSY ELEVADOR HIDRAULICO COMPL.	1	1				
2	61A–43840–01	.POWER TILT ASSY .CONJUNTO COMPONER	1	1				
3	61A–43810–00	..TILT PISTON SUB ASSY ..ELEVADOR SUB-PISTON COMPL.	1	1				
4	61A–43861–00	...O-RING ...ANILLO EN O 1	1	1				
5	61A–43871–00	...RING, BACK UP ...ANILLO	1	1				
6	93106–19N50	...OIL SEAL ...SELLO ACEITE	1	1				
7	6H1–43861–00	...O-RING ...ANILLO EN O 1	1	1				
8	6H1–43872–00	...RING, BACK UP ...ANILLO	1	1				
9	61A–4389H–00	...O-RING ...ANILLO EN O	1	1				
10	61A–43861–00	..O-RING ..ANILLO EN O 1	1	1				
11	6H1–43814–00	..PISTON, FREE ..PISTON LIBRE	1	1				
12	61A–43813–01	..CYLINDER, TILT ..CILINDRO INCLINACION	1	1				
13	97595–06420	.BOLT, WITH WASHER .PERNO CON ARANDELA	6	6				
14	61A–43835–01	.PIPE .TUBO 3	1	1				
15	61A–43833–01	.PIPE .TUBO 1	1	1				
16	61A–43818–00	.PIN, LOWER SHOCK MOUNT .PASADOR AMORTIGUADOR INFERIOR	1	1				
17	90386–18M14	.BUSH .BUJE	2	2				
18	6H1–43817–00	.FILTER 2 .FIELTRO 2	1	1				
19	97602–04230	.SCREW, PAN HEAD WITH WASHER .TORNILLO CON RONDONA	3	3				
20	61A–43828–00	.BODY, RESERVOIR .CUERPO DEPOSITO	1	1				
21	6H1–43869–00	.O-RING .ANILLO EN O 9	2	2				
22	61A–4384L–00	.SPRING, TRIM DOWN .RESORTE	1	1				
23	6T4–43851–00	.SEAT, RELIEF VALVE .ASIENTO VALVULA DE DESCARGA	2	2				
24	97602–05210	.SCREW, PAN HEAD WITH WASHER .TORNILLO CON RONDONA	4	4				
25	61A–4384K–00	.PLATE, TRIM DOWN .PLACA	1	1				
26	61A–4384J–00	.SEAL, TRIM DOWN .SELLO	1	1				
27	93210–064A5	.O-RING .ANILLO O	4	4				

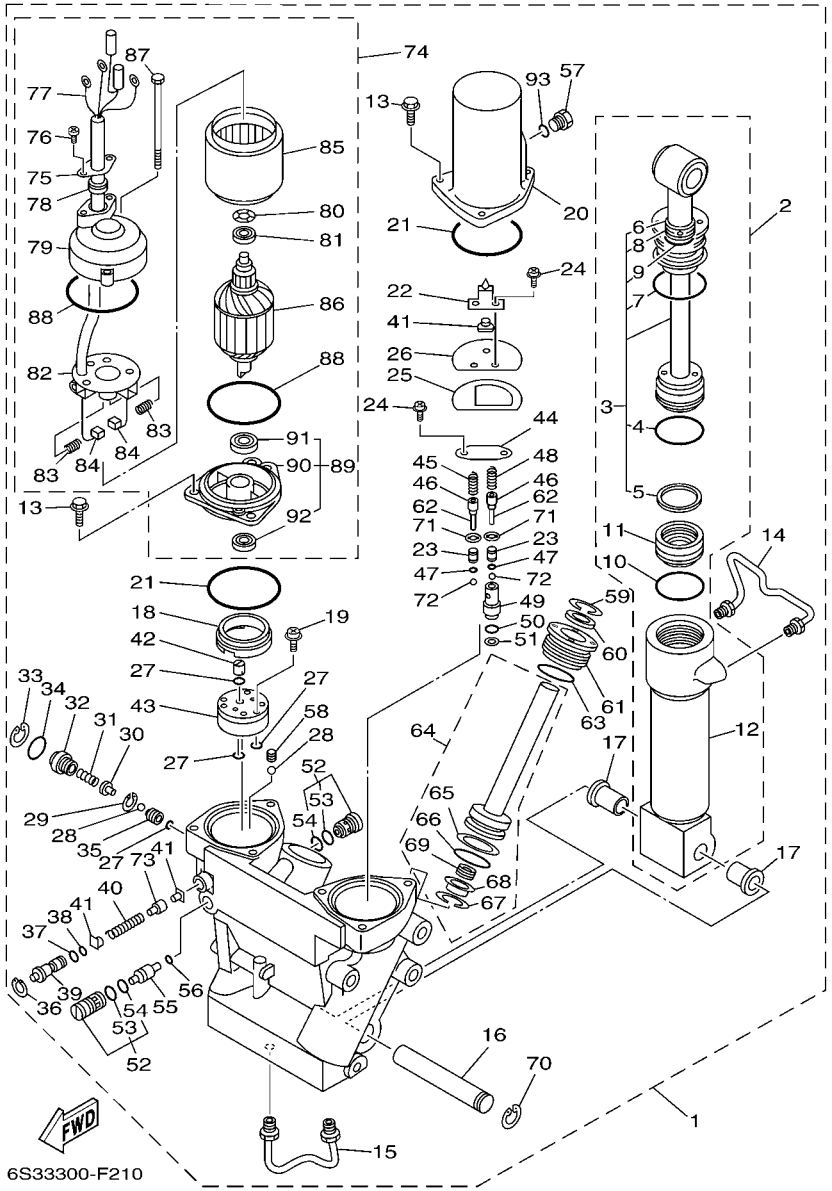

FIG. 21 POWER TRIM & TILT ASSY COMPONER Y PODER VARILLA

REF. NO.	PART NO. CODIGO Nº	DESCRIPTION DESCRIPCION	6S33	6S43				REMARKS OBSERVACIONES
28	93505–32038	.BALL .BOLA	2	2				
29	61A–43875–00	.RING, SNAP .ANILLO	1	1				
30	61A–43848–00	.ROD, MANUAL RELEASE .VARILLA DESCOPLO MANUAL	1	1				
31	61A–43854–00	.SPRING, MANUAL RELEASE .RESORTE DESCOPLO MANUAL	1	1				
32	61A–43845–00	.SCREW, MANUAL RELEASE .TORNILLO DESCOPLO MANUAL	1	1				
33	6H1–43875–00	.RING, SNAP .ANILLO	1	1				
34	93210–18397	.O-RING .ANILLO O	1	1				
35	61A–43847–00	.SEAT, MANUAL VALVE .ASIENTO VALVULA MANUAL	1	1				
36	6T4–43876–00	.RING, SNAP .ANILLO	1	1				
37	93210–07003	.O-RING .ANILLO O	1	1				
38	93210–06001	.O-RING .ANILLO O	1	1				
39	6T4–43849–00	.PIN, VALVE SUPPORT .PASADOR VALVULA SOPORTE	1	1				
40	61A–4385H–00	.SPRING, SEAL .RESORTE	1	1				
41	6H1–4384F–00	.SEAL, MAIN VALVE .ASIENTO	3	3				
42	6H1–43831–00	.CONNECTOR, SHAFT .CONEXION EJE	1	1				
43	6T4–43830–00	.GEAR PUMP ASSY .ENGRANAJE BOMBA COMPL.	1	1				
44	61A–4382K–00	.CAP, RELIEF VALVE .CASQUILLO	1	1				
45	6H1–43856–10	.SPRING, DOWN RELIEF .RESORTE SEGURIDAD	1	1				
46	6T4–43844–00	.PIN, VALVE SUPPORT .PASADOR VALVULA SOPORTE	2	2				
47	6T4–4384G–00	.SEAL, RELIEF VALVE .ASIENTO	2	2				
48	6T4–43855–00	.SPRING, UP RELIEF .RESORTE SEGURIDAD SUPERIOR	1	1				
49	6T4–43895–00	.SEAT, RELIEF VALVE .ASIENTO	1	1				
50	93210–10M74	.O-RING .ANILLO O	1	1				
51	6H1–43816–00	.FILTER 1 .FIELTRO 1	1	1				
52	6T4–43802–03	.VALVE SUB ASSY .VALVULA PRINCIPAL COMPL.	2	2				
53	6H1–43866–00	..O-RING ..ANILLO EN O 6	1	1				
54	6H1–43867–00	..O-RING ..ANILLO EN O 7	1	1				

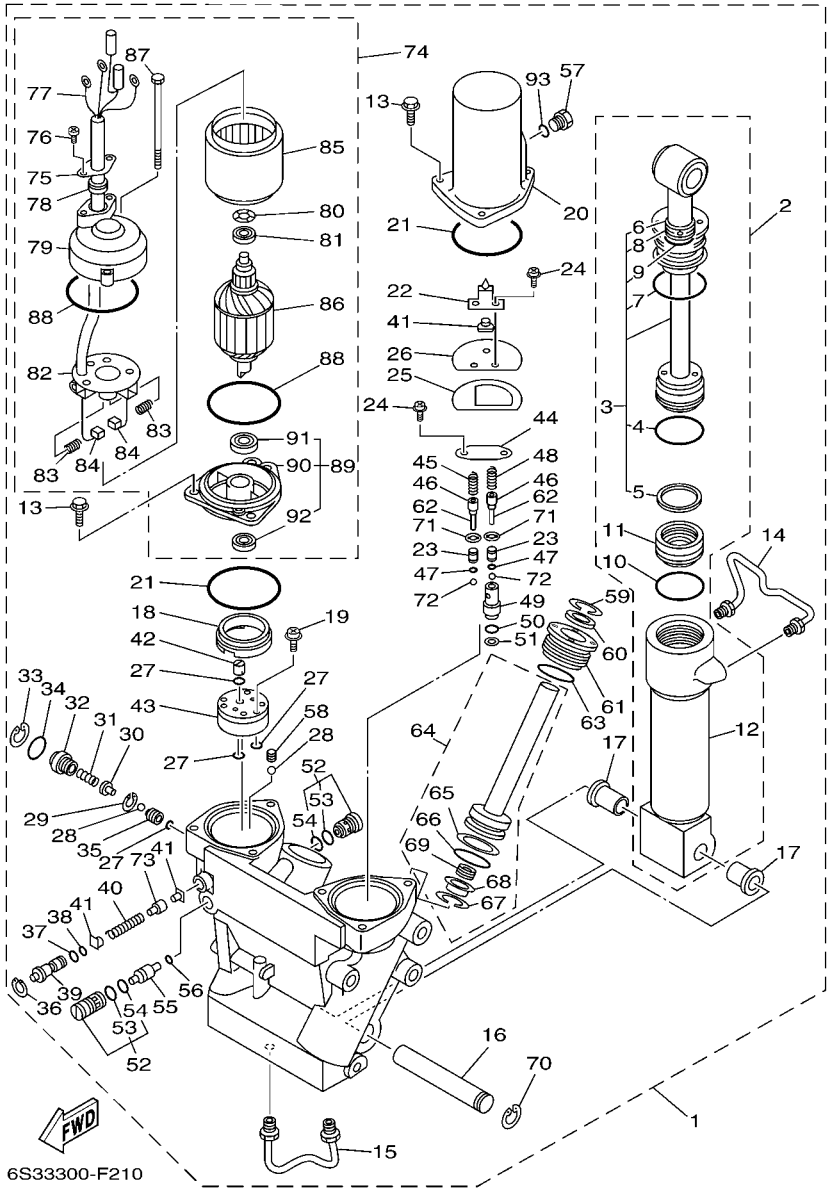

FIG. 21 POWER TRIM & TILT ASSY COMPONER Y PODER VARILLA

REF. NO.	PART NO. CODIGO Nº	DESCRIPTION DESCRIPCION	6S33	6S43				REMARKS OBSERVACIONES
55	6T4–43841–00	.PISTON, SHUTTLE .PISTON	1	1				
56	93210–09165	.O-RING .ANILLO O	1	1				
57	6H1–43829–00	.PLUG, RESERVOIR .TAPON DEPOSITO	1	1				
58	61A–43878–00	.BOLT, SOCKET .TORNILLO ENCASTRE	1	1				
59	6T4–43875–01	.RING, SNAP .ANILLO	2	2				
60	61A–43822–00	.SEAL, TRIM DUST .SELLO DE POLVO	2	2				
61	61A–43821–00	.SCREW, TRIM CYLINDER END .TORNILLO CILINDURO EXTREMO	2	2				
62	91609–10014	.PIN, SPRING .PASADOR DE RESORTE	2	2				
63	61A–43861–00	.O-RING .ANILLO EN O 1	2	2				
64	61A–43820–10	.TRIM PISTON SUB ASSY .ELEVADOR PISTON COMPL.	2	2				
65	61A–43874–00	..RING, BACK UP ..ANILLO	1	1				
66	61A–43864–00	..O-RING ..ANILLO EN O 4	1	1				
67	61A–43875–10	..RING, SNAP ..ANILLO	1	1				
68	61A–4383H–11	..HOSE, OIL 5 ..TUBO 5	1	1				
69	61A–4384H–10	..SPRING ..RESORTE	1	1				
70	61A–43876–00	.RING, SNAP .ANILLO	1	1				
71	6T4–43893–00	.WASHER .RONDANA	2	2				
72	93501–08001	.BALL .BOLA	2	2				
73	61A–4382A–00	.ADAPTOR 1 .ADAPTADOR 1	1	1				
74	61A–43880–02	.MOTOR ASSY .MOTOR COMPL.	1	1				
75	6T4–4386J–00	..WASHER, SPECIAL ..ARANDELA, ESPECIAL	1	1				
76	90157–05107	..SCREW, PAN HEAD ..TORNILLO CABEZA CONICA PLAN	2	2				
77	61A–43807–00	..WIRE SUB ASSY ..CABLE COMPL.	1	1				
78	6T4–43885–00	..GROMMET ..ARANDELA DE REFUERZO	1	1				
79	61A–43884–01	..FRAME, COMMUTATOR END ..CUADRO	1	1				
80	90206–14086	..WASHER, WAVE ..ARANDELA ONDULADA	3	3				
81	93300–60820	..BEARING ..COJINETE	1	1				

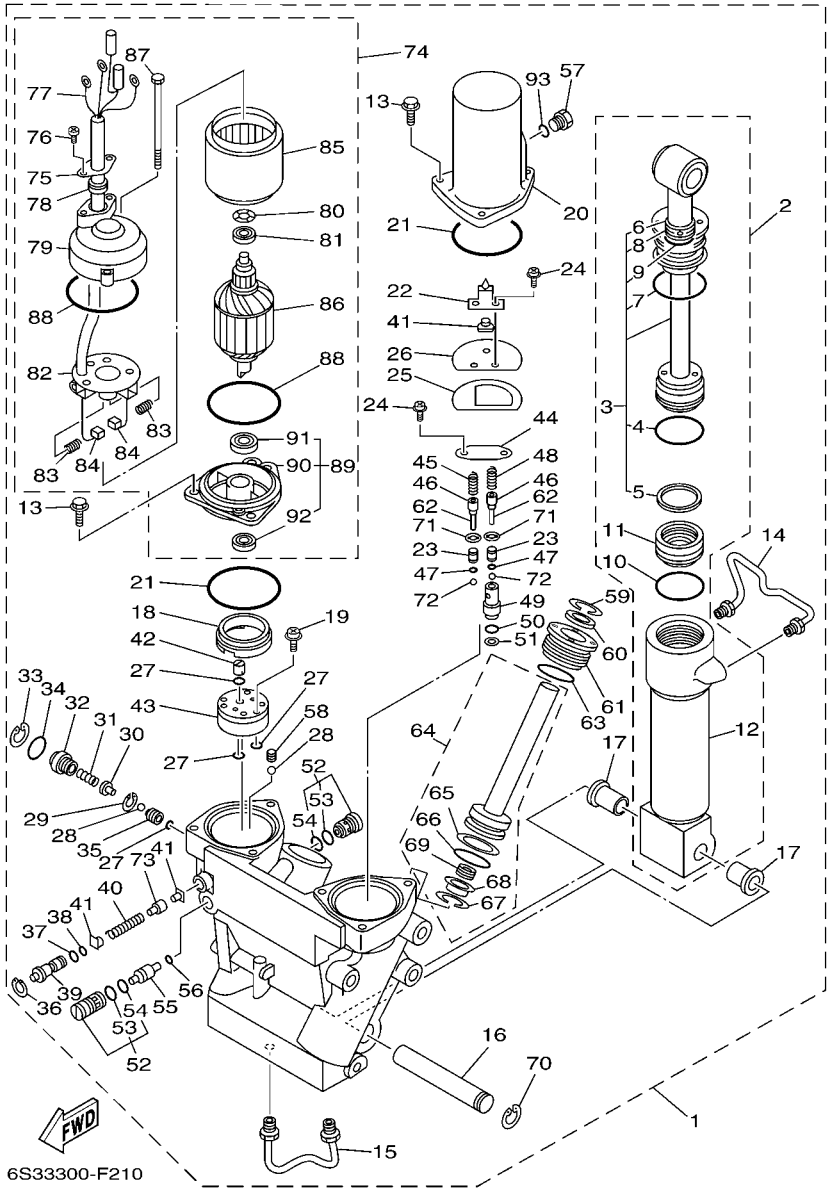

FIG. 21 POWER TRIM & TILT ASSY COMPONER Y PODER VARILLA

REF. NO.	PART NO. CODIGO Nº	DESCRIPTION DESCRIPCION	6S33	6S43				REMARKS OBSERVACIONES
82	61A–43806–00	..BRUSH HOLDER ASSY ..ESCOBILLA SOSTEN COMPL.	1	1				
83	61A–4386K–00	..SPRING, BRUSH ..RESORTE, ESCOBILLA	4	4				
84	61A–43891–00	..BRUSH 1 ..ESCOBILLA 1	2	2				
85	61A–43804–01	..STATOR ASSY ..ESTATOR COMPL	1	1				
86	61A–43805–01	..ARMATURE ASSY ..INDUCIDO COMPL.	1	1				
87	61A–43887–00	..BOLT, THROUGH ..TORNILLO	2	2				
88	93210–72789	..O-RING ..ANILLO O	2	2				
89	61A–43881–01	..FRAME, END ..CUADRO EXTERMO	1	1				
90	61A–43881–11	...FRAME, END ...CUADRO EXTERMO	1	1				
91	93300–60820	...BEARING ...COJINETE	1	1				
92	93102–08414	...OIL SEAL ...SELLO ACEITE	1	1				
93	93210–09165	.O-RING .ANILLO O	1	1				

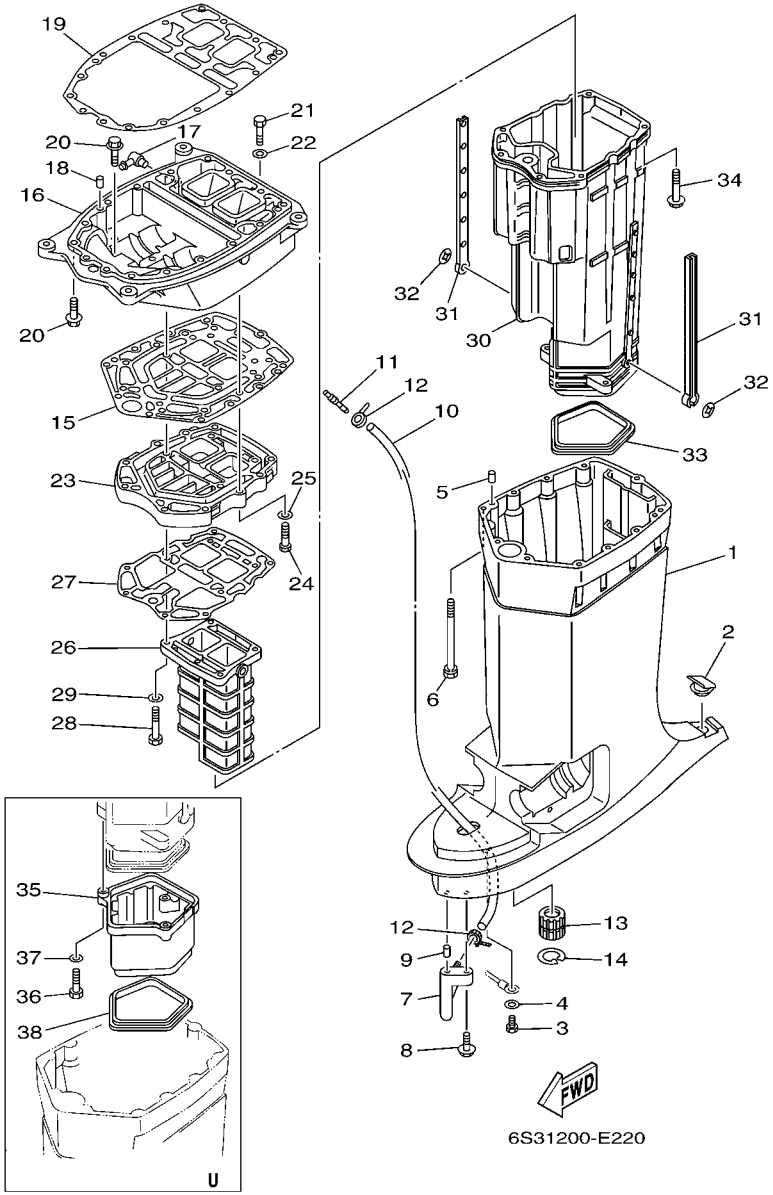

FIG. 22 UPPER CASING — FUNDA SUPERIOR

REF. NO.	PART NO. CODIGO Nº	DESCRIPTION DESCRIPCION	6S33	6S43				REMARKS OBSERVACIONES
1	61A–45111–22–8D	CASING, UPPER CAJA SUPERIOR	1	1				X(25.3") X(25.3")
	61A–45111–32–8D	CASING, UPPER CAJA SUPERIOR	1	1				U(30.2") U(30.2")
2	61A–45155–00	CAP TAPA	1	1				
3	97095–06010	BOLT PERNO	1	1				
4	92995–06600	WASHER ARANDELA	1	1				
5	93608–12M05	PIN, DOWEL PASADOR DE CLAVIJA	2	2				
6	90119–08078	BOLT, WITH WASHER TORNILLO CON ARANDELA	8	8				
7	61A–45378–00	NIPPLE, HOSE NIPLE MANGUERA	1	1				
8	90119–06M17	BOLT, WITH WASHER TORNILLO CON ARANDELA	1	1				
9	93606–12019	PIN, DOWEL PASADOR DE CLAVIJA	1	1				
10	90445–07MF0	HOSE (L1030) TUBO (L1030)	1	1				X(25.3") X(25.3")
	90445–07M21	HOSE (L1160) TUBO (L1160)	1	1				U(30.2") U(30.2")
11	6E5–83558–00	END, NIPPLE EXTREMO DE NIPLE	1	1				
12	90465–11M10	CLAMP BRIDA	2	2				
13	6E5–45318–00	BUSHING, DRIVE SHAFT BUJE, EJE DE MANDO	1	1				
14	93420–36M01	CIRCLIP SEGURO	1	1				
15	61A–45114–A0	GASKET, UPPER CASING EMPAQUE	1	1				
16	61A–41137–14–94	GUIDE, EXHAUST GUIA DE ESCAPE	1	1				FLUSHING KIT FLUSHING KIT
17	6H1–11372–00	NIPPLE, HOSE NIPLE DE MANGUERA	1	1				FLUSHING KIT FLUSHING KIT
18	93608–12M05	PIN, DOWEL PASADOR DE CLAVIJA	2	2				
19	61A–45113–A0	GASKET, UPPER CASING EMPAQUE	1	1				
20	90119–08077	BOLT, WITH WASHER TORNILLO CON ARANDELA	8	8				
21	97095–08035	BOLT PERNO	1	1				
22	92995–08600	WASHER ARANDELA	1	1				
23	61A–41131–03–5B	MANIFOLD, EXT. 1 TUBO MULTIPLE DE ESCAPE	1	1				
24	97095–08035	BOLT PERNO	4	4				
25	92995–08600	WASHER ARANDELA	4	4				

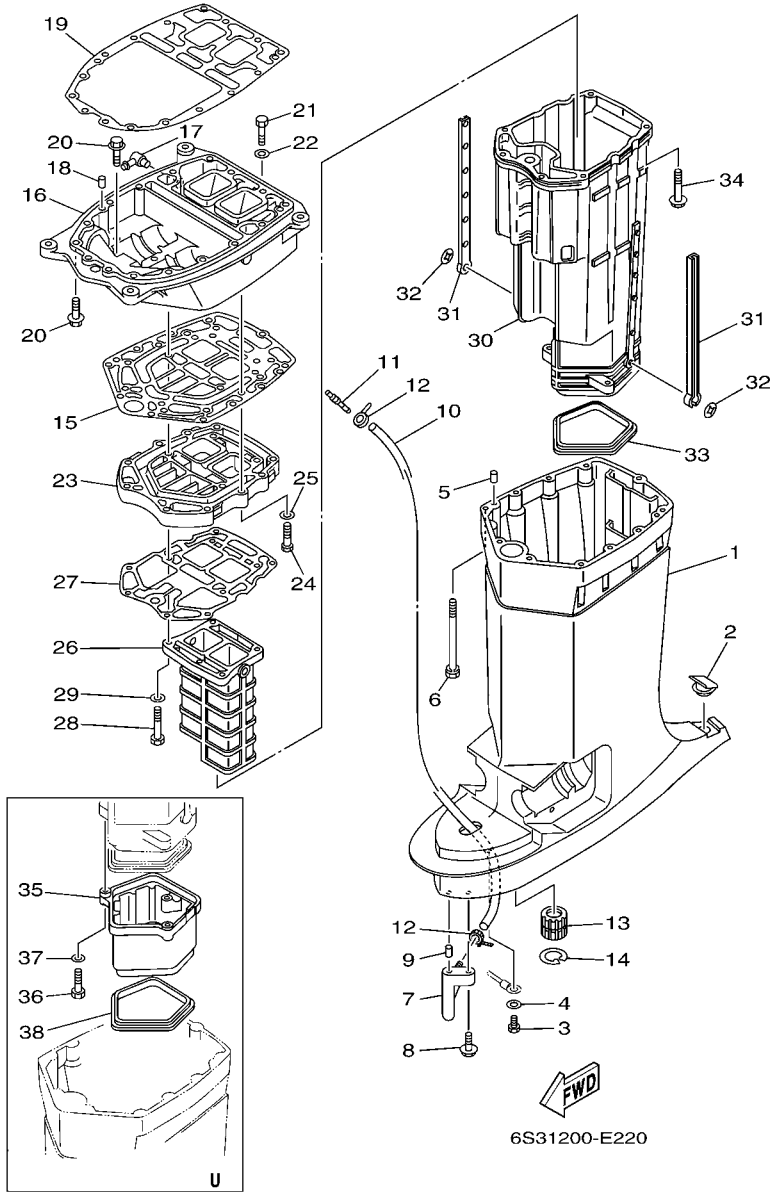

FIG. 22 UPPER CASING — FUNDA SUPERIOR

REF. NO.	PART NO. CODIGO Nº	DESCRIPTION DESCRIPCION	6S33	6S43				REMARKS OBSERVACIONES
26	61A–41132–20–5B	MANIFOLD, EXHAUST TUBO MULTIPLE DE ESCAPE	1	1				
27	6D0–41134–00	GASKET, EXHAUST MANIFOLD EMPAQUE	1	1				
28	97095–08050	BOLT PERNO	4	4				
29	92995–08600	WASHER ARANDELA	4	4				
30	61A–14711–30–5B	MUFFLER 1 SILENCIADOR 1	1	1				
31	6E5–14737–00	DAMPER, MUFFLER AMORTIGUADOR DE SILENCIADOR	2	2				
32	90183–05M02	NUT, SPRING TUERCA DE RESORTE	2	2				
33	61A–45123–01	GASKET, MUFFLER EMPAQUE SILENCIADOR	1	1				
34	90119–08M74	BOLT, WITH WASHER TORNILLO CON ARANDELA	6	6				
35	61A–14721–30–5B	MUFFLER 2 SILENCIADOR 2	1	1				U(30.2") U(30.2")
36	97095–06035	BOLT PERNO	3	3				U(30.2") U(30.2")
37	92995–06600	WASHER ARANDELA	3	3				U(30.2") U(30.2")
38	61A–45123–01	GASKET, MUFFLER EMPAQUE SILENCIADOR	1	1				U(30.2") U(30.2")

FIG. 23 LOWER CASING & DRIVE 1 IMPULSOR E INFERIOR 1

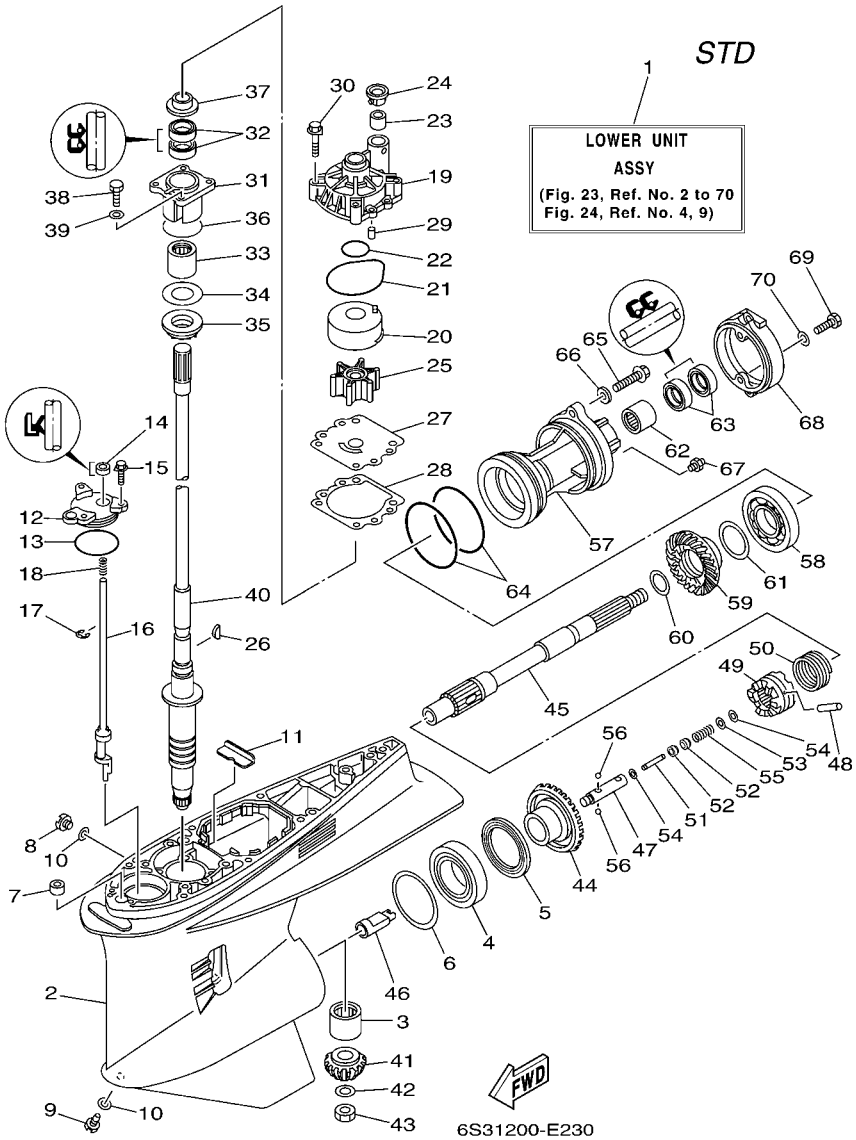

REF. NO.	PART NO. CODIGO Nº	DESCRIPTION DESCRIPCION	6S33	6S43				REMARKS OBSERVACIONES
1	6S3–45300–20–8D	LOWER UNIT ASSY CONJUNTO UNIDAD INFERIOR	1					X(25.3"),RH X(25.3"),RH
	6S3–45300–30–8D	LOWER UNIT ASSY CONJUNTO UNIDAD INFERIOR	1					U(30.2"),RH U(30.2"),RH
2	6S3–45301–00–8D	CASING, LOWER FUNDA INFERIOR COMPLETA	1					
3	93311–83280	BEARING COJINETE DE RODILLOS	1					
4	93390–00030	BEARING COJINETE DE RODILLOS	1					
5	93340–67011	BEARING COJINETES CON RODAMIENTOS	1					
6	61A–45567–00	SHIM (T:0.10MM) LAINA(T:0.10MM)	1					UR UR
	61A–45567–10	SHIM (T:0.12MM) LAINA (T:0.12MM)	1					UR UR
	61A–45567–20	SHIM (T:0.15MM) LAINA (T:0.15MM)	1					UR UR
	61A–45567–30	SHIM (T:0.18MM) LAINA (T:0.18MM)	1					UR UR
	61A–45567–40	SHIM (T:0.30MM) LAINA (T:0.30MM)	1					UR UR
	61A–45567–50	SHIM (T:0.40MM) LAINA (T:0.40MM)	1					UR UR
	61A–45567–60	SHIM (T:0.50MM) LAINA (T:0.50MM)	1					UR UR
7	663–44366–00	DAMPER, WATER SEAL GOMA DEL SELLO DE AGUA	1					
8	90340–08002	PLUG, STRAIGHT SCREW TORNILLO, DE DRENAJE	1					
9	688–45341–10	PLUG, DRAIN TAPON, DREN	1					
10	90430–08020	GASKET JUNTA	2					
11	61A–45376–00–94	GUIDE, SEAL DAMPER GUIA DE SELLO GOMA	1					
12	61A–45321–01	PLATE PLACA	1					
13	93210–64488	O-RING ANILLO O	1					
14	93106–09014	OIL SEAL SELLO ACEITE	1					
15	90119–06M10	BOLT, WITH WASHER TORNILLO CON ARANDELA	3					
16	60V–44150–00	SHIFT CAM ASSY CONJUNTO EJE LEVA COMPL.	1					
17	99001–08600	CIRCLIP PRESILLA REDONDA	1					
18	90501–11M10	SPRING, COMPRESSION RESORTE DE COMPRESION	1					
19	61A–44311–01	HOUSING, WATER PUMP CAJA BOMBA DE AGUA	1					
20	6R3–44322–42	INSERT, CARTRIDGE CARTUCHO	1					FOR CHROMATE FOR CHROMATE

FIG. 23 LOWER CASING & DRIVE 1 IMPULSOR E INFERIOR 1

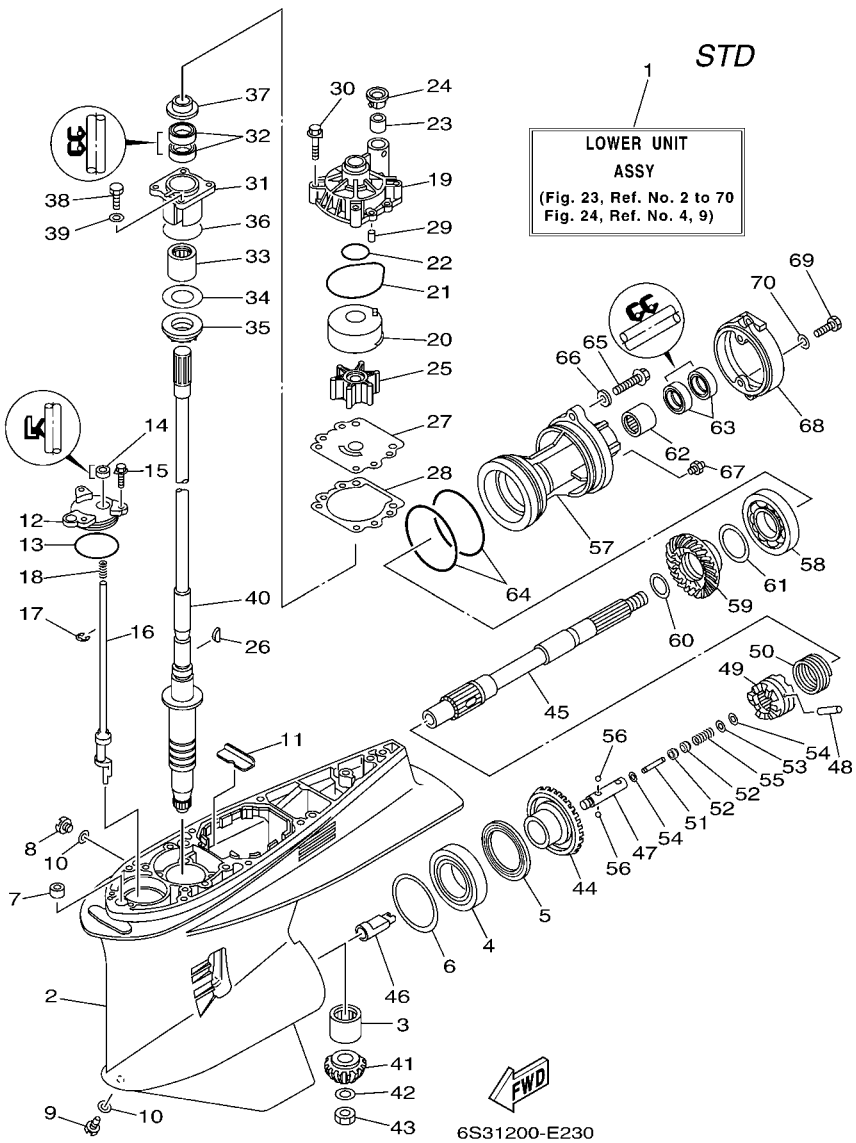

REF. NO.	PART NO. CODIGO Nº	DESCRIPTION DESCRIPCION	6S33	6S43				REMARKS OBSERVACIONES
21	93210–86M38	O-RING ANILLO O	1					
22	93210–37160	O-RING ANILLO O	1					
23	6E5–44365–00	DAMPER, WATER SEAL HULE DE SELLO DE AGUA	1					
24	6E5–44312–00	COVER, WATER PUMP HOUSING CUBIERTA CAJA BOMBA DE AGUA	1					
25	6E5–44352–01	IMPELLER IMPULSOR	1					
26	90280–04M05	KEY, WOODRUFF CUNA WOODRUFF	1					
27	6G5–44323–40	OUTER PLATE, CARTRIDGE PLACA EXTERIOR DEL CARTUCHO	1					FOR CHROMATE FOR CHROMATE
28	6E5–44315–A0	GASKET, WATER PUMP EMPAQUE	1					
29	93606–12019	PIN, DOWEL PASADOR DE CLAVIJA	2					
30	90119–08M14	BOLT, WITH WASHER TORNILLO CON ARANDELA	4					
31	61A–45331–00–94	HOUSING, BEARING CAJA DE COJINETE	1					
32	93101–28M16	OIL SEAL SELLO ACEITE	2					
33	93317–330U2	BEARING COJINETE	1					
34	61A–45587–00	SHIM (T:0.10MM) LAINA (T:0.10MM)	1					UR UR
	61A–45587–10	SHIM (T:0.12MM) LAINA (T:0.12MM)	1					UR UR
	61A–45587–20	SHIM (T:0.15MM) LAINA (T:0.15MM)	1					UR UR
	61A–45587–30	SHIM (T:0.18MM) LAINA (T:0.18MM)	1					UR UR
	61A–45587–40	SHIM (T:0.30MM) LAINA (T:0.30MM)	1					UR UR
	61A–45587–50	SHIM (T:0.40MM) LAINA (T:0.40MM)	1					UR UR
	61A–45587–60	SHIM (T:0.50MM) LAINA (T:0.50MM)	1					UR UR
35	93341–930U9	BEARING COJINETES CON RODAMIENTOS	1					
36	93210–55M14	O-RING ANILLO O	1					
37	6E5–45344–00	COVER, OIL SEAL CUBIERTA SELLO ACEITE	1					
38	97095–08025	BOLT PERNO	4					
39	92995–08600	WASHER ARANDELA	4					
40	61A–45501–20	DRIVE SHAFT COMP. EJE DE MANDO COMPL.	1					X(25.3") X(25.3")
	61A–45501–30	DRIVE SHAFT COMP. EJE DE MANDO COMPL.	1					U(30.2") U(30.2")

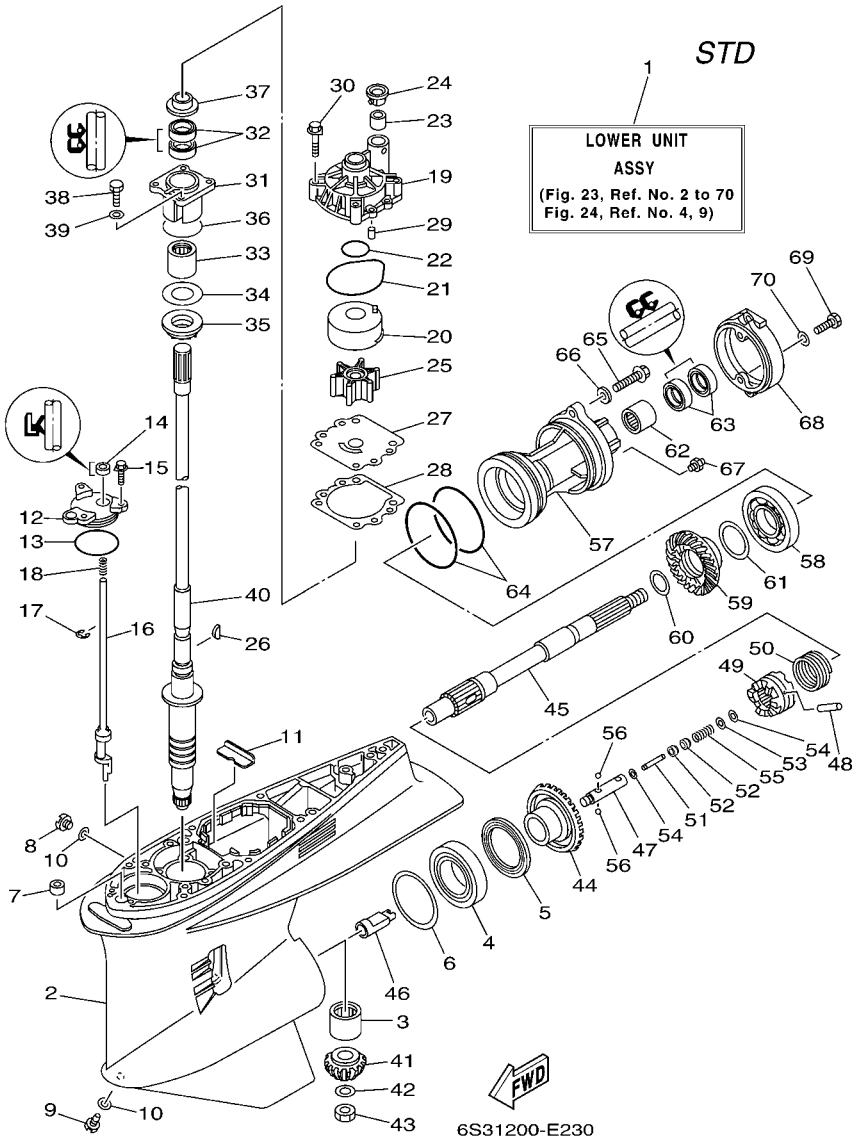

FIG. 23 LOWER CASING & DRIVE 1 IMPULSOR E INFERIOR 1

REF. NO.	PART NO. CODIGO Nº	DESCRIPTION DESCRIPCION	6S33	6S43				REMARKS OBSERVACIONES
41	61A–45551–03	PINION (16T) PINON (16T)	1					
42	90201–16M00	WASHER, PLATE ARANDELA PLANA	1					
43	90170–16M19	NUT TUERCA	1					
44	6S3–45560–00	GEAR 1 (29T) ENGRANAJE 1 (29T)	1					
45	69J–45611–00	SHAFT, PROPELLER EJE PROPUSOR	1					
46	61A–45641–02	SHIFTER CAMBIO	1					
47	61A–45634–01	SLIDE, SHIFT DESLIZADOR, CAMBIO	1					
48	61A–45632–00	PIN, CROSS PASADOR TRANSVERSAL	1					
49	61A–45631–03	CLUTCH, DOG EMBRAGUE DE GARRA	1					
50	61A–45633–00	RING, CROSS PIN ANILLO DE PASADOR	1					
51	6H1–45668–00	SHAFT, FREE EJE	1					
52	61A–45635–00	PLUNGER, SHIFT EMBOLO DE CAMBIO	2					
53	90201–02M00	WASHER, PLATE ARANDELA PLANA	1					
54	90183–02M03	NUT, SPRING TUERCA DE RESORTE	2					
55	90501–10M77	SPRING, COMPRESSION RESORTE DE COMPRESION	1					
56	93501–04011	BALL BOLA	2					
57	69J–45332–00–94	HOUSING, BEARING CAJA BALERO 2	1					
58	93306–210U0	BEARING COJINETE	1					
59	61A–45571–00	GEAR 2 (29T) ENGRANAJE 2 (29T)	1					
60	90201–31M00	WASHER, PLATE ARANDELA PLANA	1					
61	61A–45577–00	SHIM (T:0.10MM) LAINA (T:0.10MM)	1					UR UR
	61A–45577–10	SHIM (T:0.12MM) LAINA (:0.12MM)	1					UR UR
	61A–45577–20	SHIM (T:0.15MM) LAINA (T:0.15MM)	1					UR UR
	61A–45577–30	SHIM (T:0.18MM) LAINA (T:0.18MM)	1					UR UR
	61A–45577–40	SHIM (T:0.30MM) LAINA (T:0.30MM)	1					UR UR
	61A–45577–50	SHIM (T:0.40MM) LAINA (T:0.40MM)	1					UR UR
	61A–45577–60	SHIM (T:0.50MM) LAINA (T:0.50MM)	1					UR UR

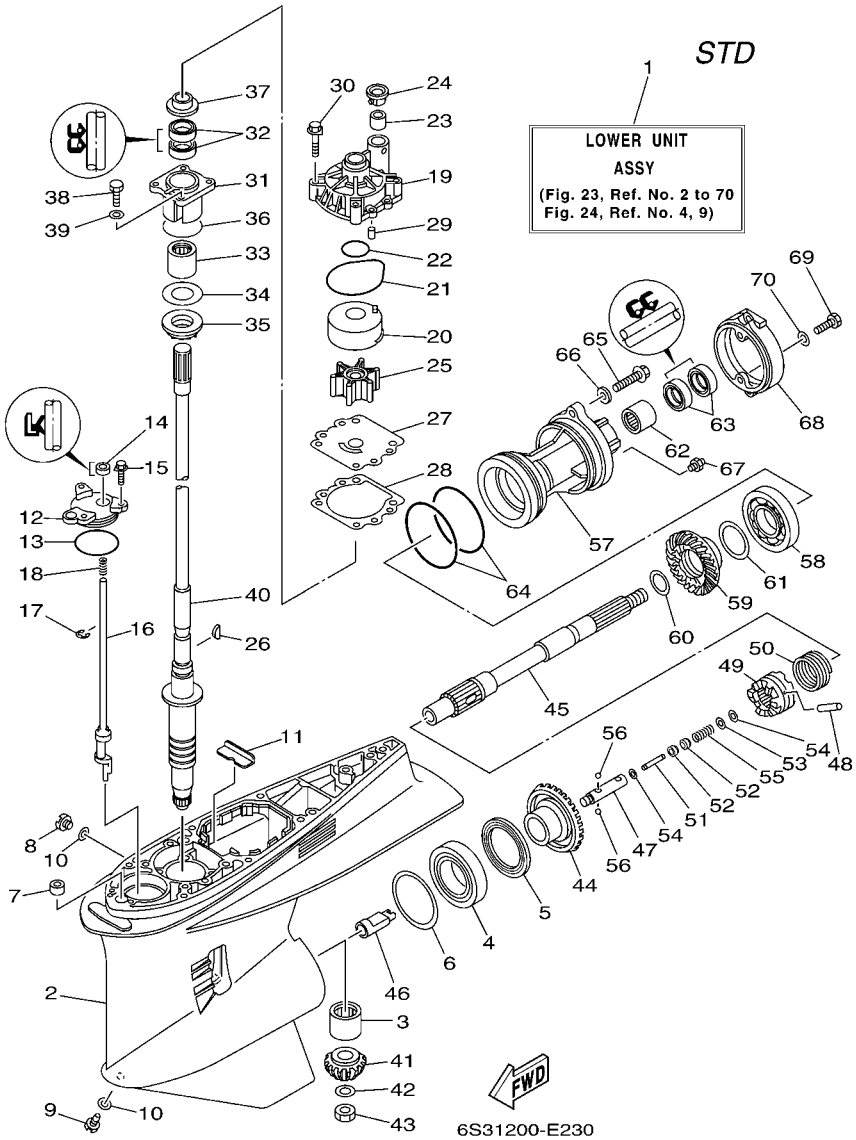

FIG. 23 LOWER CASING & DRIVE 1 IMPULSOR E INFERIOR 1

REF. NO.	PART NO. CODIGO Nº	DESCRIPTION DESCRIPCION	6S33	6S43				REMARKS OBSERVACIONES
62	93315–43061	BEARING COJINETE DE RODILLOS	1					
63	93101–30M17	OIL SEAL SELLO ACEITE	2					
64	93211–04384	O-RING ANILLO O	2					
65	90105–08036	BOLT, FLANGE TORNILLO	2					
66	90201–08023	WASHER, PLATE ARANDELA PLANA	2					
67	93700–09M00	NIPPLE, GREASE BOQUILLA DE ENGRASAR	1					
68	61A–45361–01–5B	CAP, LOWER CASING FUNDA INFERIOR	1					
69	97095–08020	BOLT PERNO	2					
70	92995–08600	WASHER ARANDELA	2					

FIG. 24 LOWER CASING & DRIVE 2 IMPULSOR E INFERIOR 2

STD

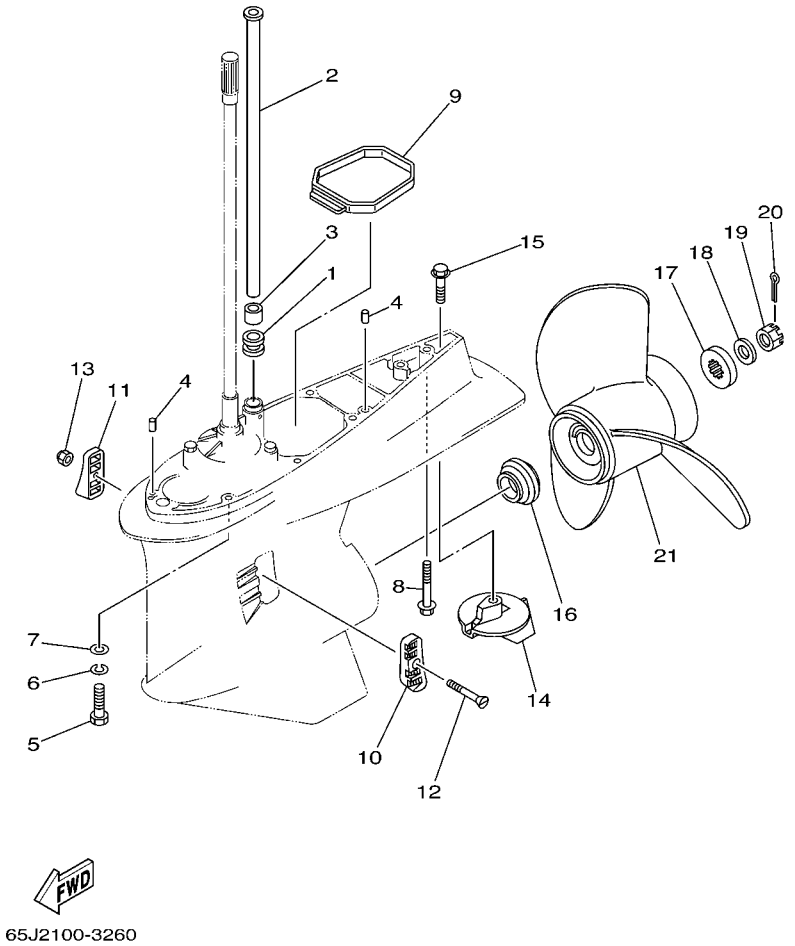

REF. NO.	PART NO. CODIGO Nº	DESCRIPTION DESCRIPCION	6S33	6S43				REMARKS OBSERVACIONES
1	6E5–44366–00	DAMPER, WATER SEAL GOMA DEL SELLO DE AGUA	1					
2	61A–44361–20	TUBE, WATER TUBO DE AGUA	1					X(25.3") X(25.3")
	61A–44361–30	TUBE, WATER TUBO DE AGUA	1					U(30.2") U(30.2")
3	6E5–44365–00	DAMPER, WATER SEAL HULE DE SELLO DE AGUA	1					
4	93608–12M05	PIN, DOWEL PASADOR DE CLAVIJA	2					
5	97095–10045	BOLT PERNO	7					
6	92995–10100	WASHER ARANDELA	7					
7	92995–10600	WASHER ARANDELA	7					
8	90119–10MA2	BOLT, WITH WASHER TORNILLO CON ARANDELA	1					
9	61A–45375–00	DAMPER, SEAL GOMA DE SELLO	1					
10	61A–45214–10	COVER, WATER INLET 1 CUBIERTA ENTRADA AGUA 1	1					
11	61A–45215–10	COVER, WATER INLET 2 CUBIERTA ENTRADA AGUA 2	1					
12	90152–05003	SCREW, COUNTERSUNK TORNILLO EMBUTIDO	1					
13	90185–05002	NUT, SELF-LOCKING TUERCA AUTOBLOCANTE	1					
14	61A–45371–00	TAB-TRIM QUILLA ESTABILIZADOR	1					
15	90105–10M00	BOLT, FLANGE TORNILLO	1					
16	6E5–45987–01	SPACER ESPACIADOR	1					
17	688–45997–01	SPACER ESPACIADOR	1					
18	92990–18200	WASHER ARANDELA PLANA	1					
19	90171–18M04	NUT, CASTLE TUERCA ENTALLADA	1					
20	91490–40030	PIN, COTTER CHAVETA	1					
21	6G5–45970–02–98	PROPELLER (3X15-1/4"X15"-M) PROPELA (3X15-1/4"X15"-M)	1					UR UR
	6G5–45972–02–98	PROPELLER (3X13-3/4"X21"-M) PROPELA (3X13-3/4"X21"-M)	1					UR UR
	6G5–45974–03–98	PROPELLER (3X13-3/4"X19"-M2) PROPELA (3X13-3/4"X19"-M2)	1					UR UR
	6G5–45978–03–98	PROPELLER (3X13-3/4"X17"-M2) PROPELA (3X13-3/4"X17"-M2)	1					UR UR
	61A–45972–00–98	PROPELLER (3X14-1/2"X21"-T) PROPELA (3X14-1/2"X21"-T)	1					UR UR
	61A–45974–00–98	PROPELLER (3X14-1/2"X19"-T) PROPELA (3X14-1/2"X19"-T)	1					UR UR

FIG. 24 LOWER CASING & DRIVE 2 IMPULSOR E INFERIOR 2

STD

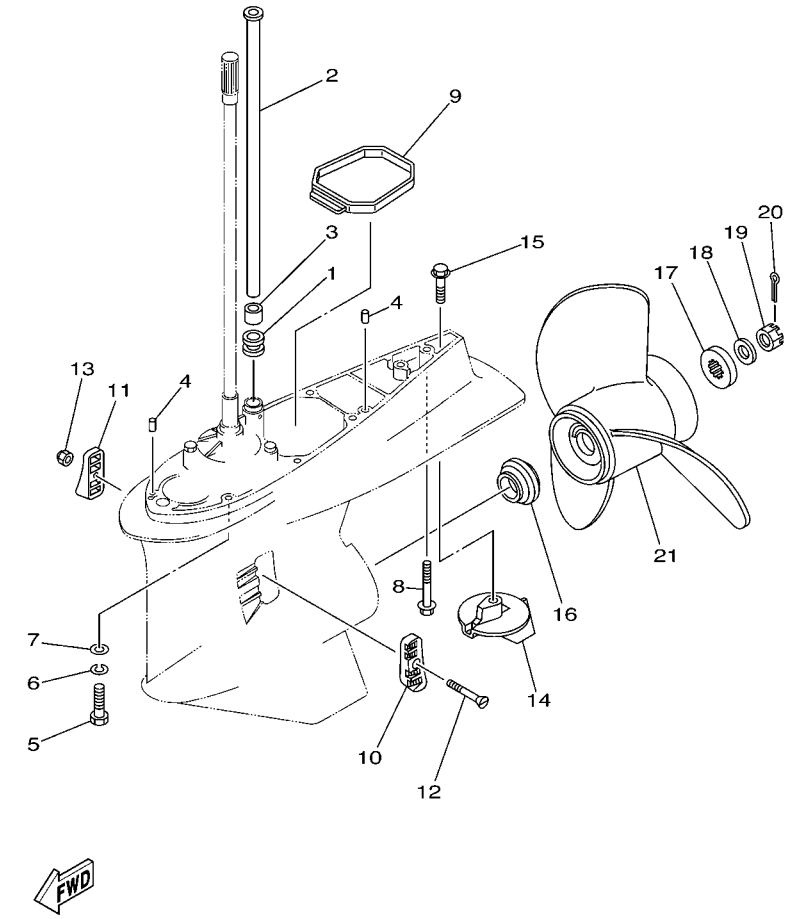

65J2100-3260

REF. NO.	PART NO. CODIGO Nº	DESCRIPTION DESCRIPCION	6S33	6S43				REMARKS OBSERVACIONES
21	61A–45978–00–98	PROPELLER (3X15"X17"-T) PROPELA (3X15"X17"-T)	1					UR UR
	6R4–45970–A1	PROPELLER (3X15-1/4"X19"-M) PROPELA (3X15-1/4"X19"-M)	1					UR UR
	6R4–45972–A0	PROPELLER (3X14-7/8"X21"-M) PROPELA (3X14-7/8"X21"-M)	1					UR UR
	6R4–45974–A0	PROPELLER (3X14-1/2"X23"-M) PROPELA (3X14-1/2"X23"-M)	1					UR UR
	6R4–45976–A0	PROPELLER (3X14-1/2"X15"-M) PROPELA (3X14-1/2"X15"-M)	1					UR UR
	6R4–45978–A0	PROPELLER (3X15-1/4"X17"-M) PROPELA (3X15-1/4"X17"-M)	1					UR UR

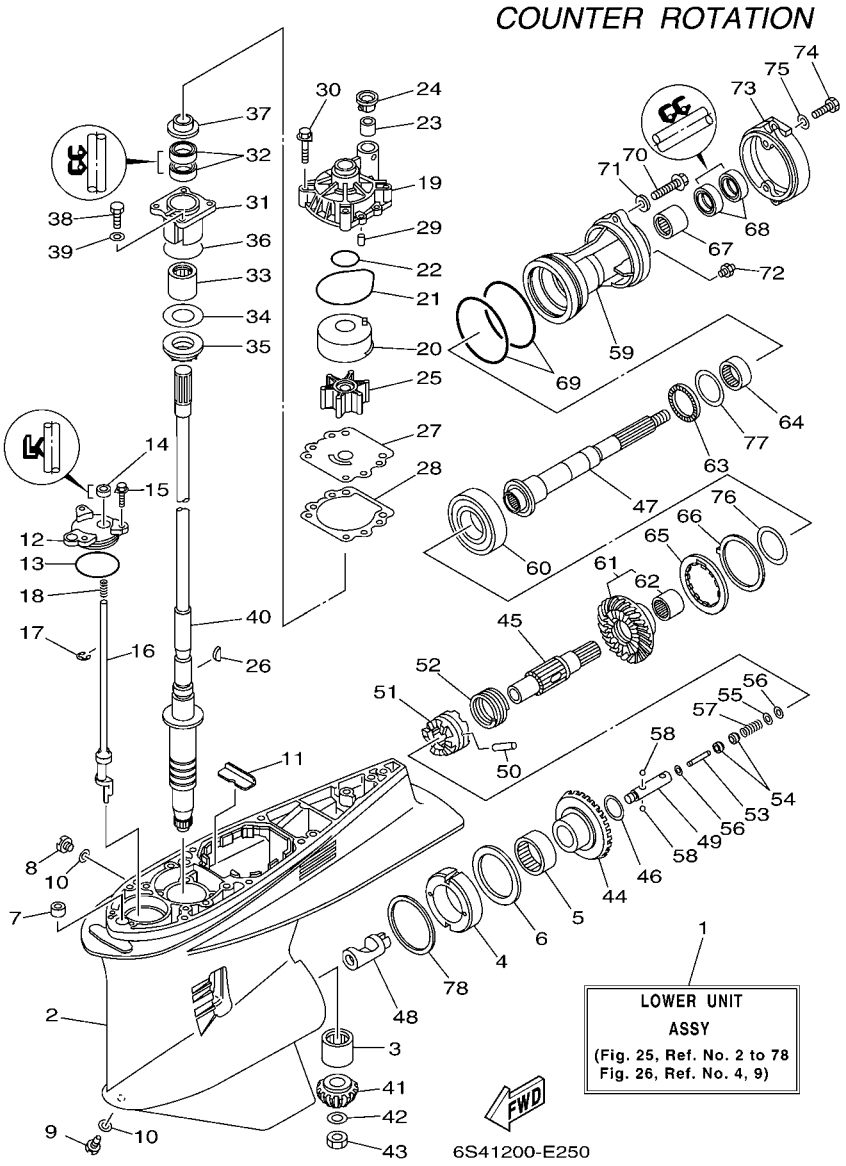

FIG. 25 LOWER CASING & DRIVE 3 IMPULSOR E INFERIOR 3

REF. NO.	PART NO. CODIGO Nº	DESCRIPTION DESCRIPCION	6S33	6S43				REMARKS OBSERVACIONES
1	6S4–45300–20–8D	LOWER UNIT ASSY CONJUNTO UNIDAD INFERIOR		1				X(25.3"),LH X(25.3"),LH
	6S4–45300–30–8D	LOWER UNIT ASSY CONJUNTO UNIDAD INFERIOR		1				U(30.2"),LH U(30.2"),LH
2	6S3–45301–00–8D	CASING, LOWER FUNDA INFERIOR COMPLETA		1				
3	93311–83280	BEARING COJINETE DE RODILLOS		1				
4	61B–45538–01	SPACER 1 ESPACIADOR 1		1				
5	93315–660W3	BEARING COJINETE DE RODILLOS		1				
6	93341–670V0	BEARING COJINETES CON RODAMIENTOS		1				
7	663–44366–00	DAMPER, WATER SEAL GOMA DEL SELLO DE AGUA		1				
8	90340–08002	PLUG, STRAIGHT SCREW TORNILLO, DE DRENAJE		1				
9	688–45341–10	PLUG, DRAIN TAPON, DREN		1				
10	90430–08020	GASKET JUNTA		2				
11	61A–45376–00–94	GUIDE, SEAL DAMPER GUIA DE SELLO GOMA		1				
12	61A–45321–01	PLATE PLACA		1				
13	93210–64488	O-RING ANILLO O		1				
14	93106–09014	OIL SEAL SELLO ACEITE		1				
15	90119–06M10	BOLT, WITH WASHER TORNILLO CON ARANDELA		3				
16	60W–44150–00	SHIFT CAM ASSY CONJUNTO EJE LEVA COMPL.		1				
17	99001–08600	CIRCLIP PRESILLA REDONDA		1				
18	90501–11M10	SPRING, COMPRESSION RESORTE DE COMPRESION		1				
19	61A–44311–01	HOUSING, WATER PUMP CAJA BOMBA DE AGUA		1				
20	6R3–44322–42	INSERT, CARTRIDGE CARTUCHO		1				FOR CHROMATE FOR CHROMATE
21	93210–86M38	O-RING ANILLO O		1				
22	93210–37160	O-RING ANILLO O		1				
23	6E5–44365–00	DAMPER, WATER SEAL HULE DE SELLO DE AGUA		1				
24	6E5–44312–00	COVER, WATER PUMP HOUSING CUBIERTA CAJA BOMBA DE AGUA		1				
25	6E5–44352–01	IMPELLER IMPULSOR		1				
26	90280–04M05	KEY, WOODRUFF CUNA WOODRUFF		1				

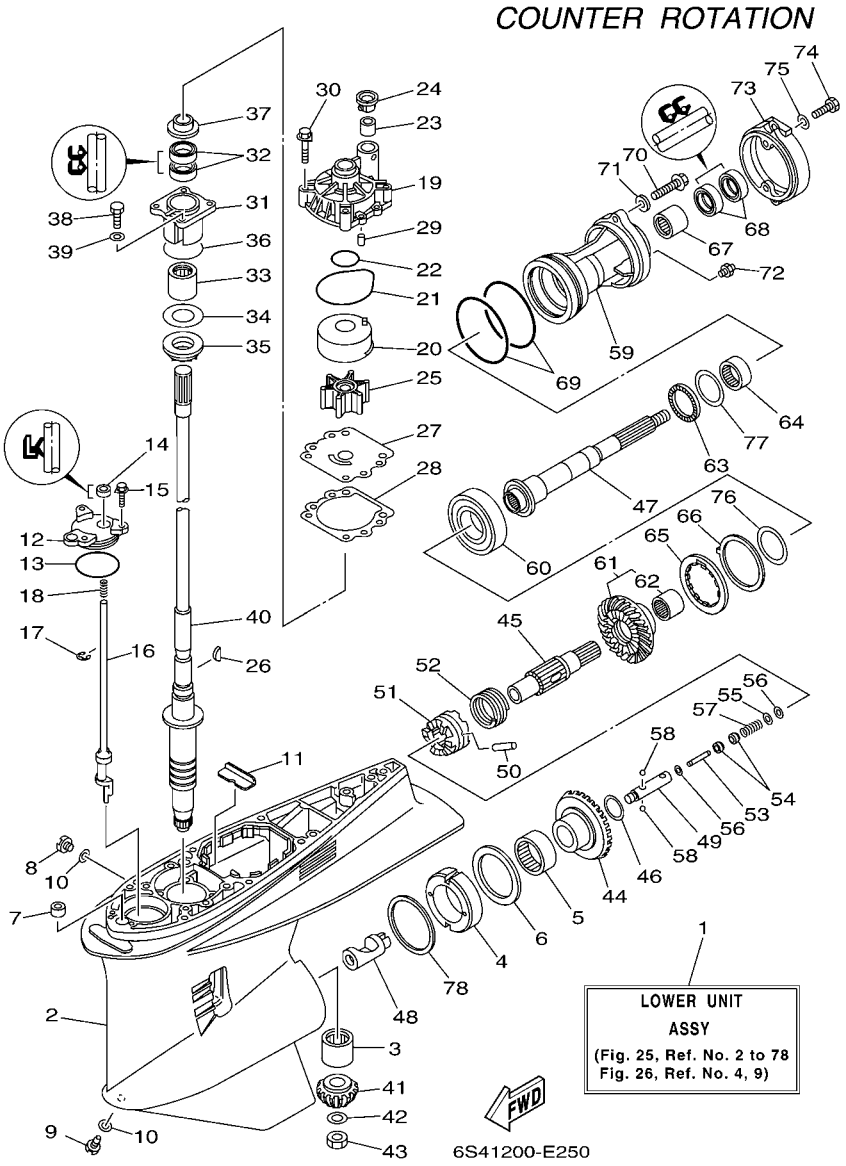

FIG. 25 LOWER CASING & DRIVE 3 IMPULSOR E INFERIOR 3

REF. NO.	PART NO. CODIGO Nº	DESCRIPTION DESCRIPCION	6S33	6S43				REMARKS OBSERVACIONES
27	6G5–44323–40	OUTER PLATE, CARTRIDGE PLACA EXTERIOR DEL CARTUCHO		1				FOR CHROMATE FOR CHROMATE
28	6E5–44315–A0	GASKET, WATER PUMP EMPAQUE		1				
29	93606–12019	PIN, DOWEL PASADOR DE CLAVIJA		2				
30	90119–08M14	BOLT, WITH WASHER TORNILLO CON ARANDELA		4				
31	61A–45331–00–94	HOUSING, BEARING CAJA DE COJINETE		1				
32	93101–28M16	OIL SEAL SELLO ACEITE		2				
33	93317–330U2	BEARING COJINETE		1				
34	61A–45587–00	SHIM (T:0.10MM) LAINA (T:0.10MM)		1				UR UR
	61A–45587–10	SHIM (T:0.12MM) LAINA (T:0.12MM)		1				UR UR
	61A–45587–20	SHIM (T:0.15MM) LAINA (T:0.15MM)		1				UR UR
	61A–45587–30	SHIM (T:0.18MM) LAINA (T:0.18MM)		1				UR UR
	61A–45587–40	SHIM (T:0.30MM) LAINA (T:0.30MM)		1				UR UR
	61A–45587–50	SHIM (T:0.40MM) LAINA (T:0.40MM)		1				UR UR
	61A–45587–60	SHIM (T:0.50MM) LAINA (T:0.50MM)		1				UR UR
35	93341–930U9	BEARING COJINETES CON RODAMIENTOS		1				
36	93210–55M14	O-RING ANILLO O		1				
37	6E5–45344–00	COVER, OIL SEAL CUBIERTA SELLO ACEITE		1				
38	97095–08025	BOLT PERNO		4				
39	92995–08600	WASHER ARANDELA		4				
40	61A–45501–20	DRIVE SHAFT COMP. EJE DE MANDO COMPL.		1				X(25.3") X(25.3")
	61A–45501–30	DRIVE SHAFT COMP. EJE DE MANDO COMPL.		1				U(30.2") U(30.2")
41	61A–45551–03	PINION (16T) PINON (16T)		1				
42	90201–16M00	WASHER, PLATE ARANDELA PLANA		1				
43	90170–16M19	NUT TUERCA		1				
44	61B–45560–01	GEAR 1 (29T) ENGRANAJE 1 (29T)		1				
45	61B–45611–01	SHAFT, PROPELLER EJE PROPUSOR		1				
46	90201–29M01	WASHER, PLATE ARANDELA PLANA		1				

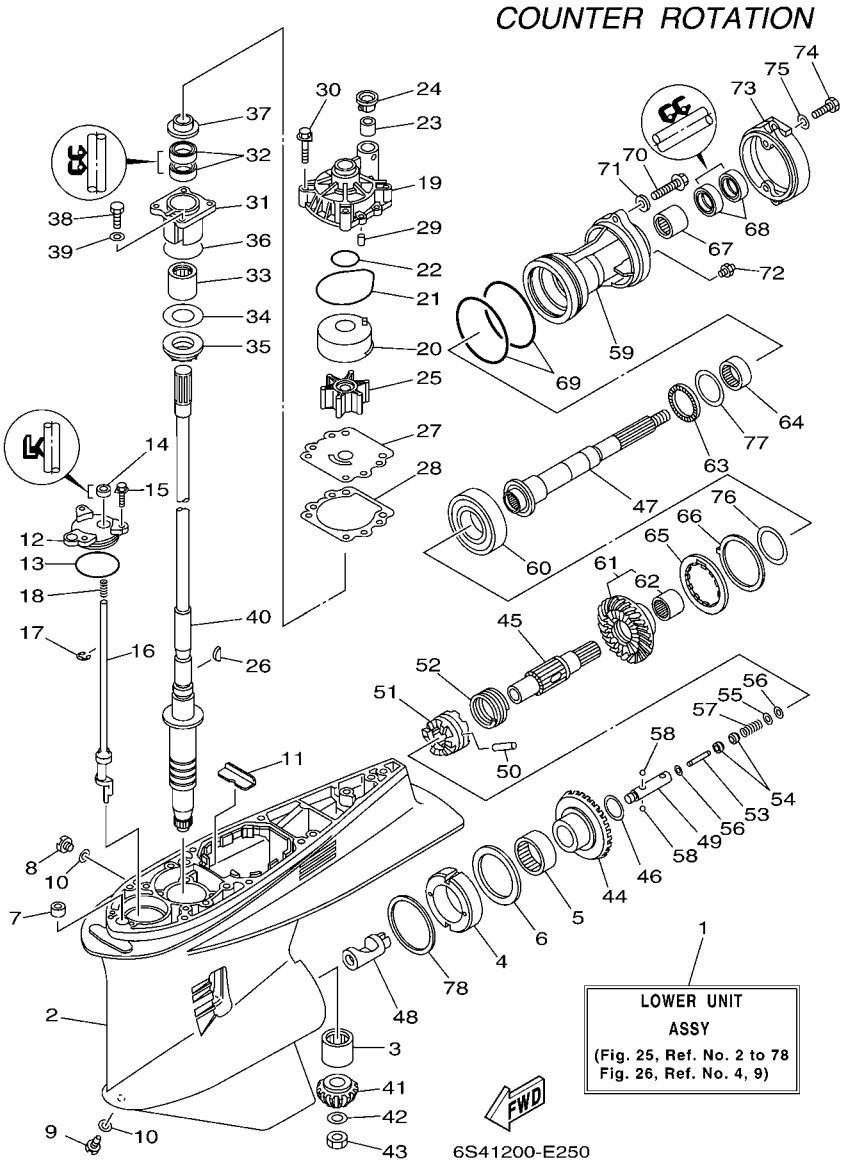

FIG. 25 LOWER CASING & DRIVE 3 IMPULSOR E INFERIOR 3

REF. NO.	PART NO. CODIGO Nº	DESCRIPTION DESCRIPCION	6S33	6S43				REMARKS OBSERVACIONES
47	61B–45611–20	SHAFT, PROPELLER EJE PROPUSOR		1				
48	61B–45641–01	SHIFTER CAMBIO		1				
49	61A–45634–01	SLIDE, SHIFT DESLIZADOR, CAMBIO		1				
50	61A–45632–00	PIN, CROSS PASADOR TRANSVERSAL		1				
51	61A–45631–03	CLUTCH, DOG EMBRAGUE DE GARRA		1				
52	61A–45633–00	RING, CROSS PIN ANILLO DE PASADOR		1				
53	6H1–45668–00	SHAFT, FREE EJE		1				
54	61A–45635–00	PLUNGER, SHIFT EMBOLO DE CAMBIO		2				
55	90201–02M00	WASHER, PLATE ARANDELA PLANA		1				
56	90183–02M03	NUT, SPRING TUERCA DE RESORTE		2				
57	90501–10M77	SPRING, COMPRESSION RESORTE DE COMPRESION		1				
58	93501–04011	BALL BOLA		2				
59	61B–45332–01–94	HOUSING, BEARING CAJA BALERO 2		1				
60	93332–000W2	BEARING COJINETE		1				
61	61B–45570–03	GEAR 2 (29T) ENGRANAJE 2 (29T)		1				
62	93315–43061	.BEARING .COJINETE DE RODILLOS		1				
63	93341–440U5	BEARING COJINETES CON RODAMIENTOS		1				
64	93315–440V6	BEARING COJINETE DE RODILLOS		1				
65	61B–45384–00	NUT TUERCA		1				
66	61B–45383–00	WASHER, CLAW ARANDELA DE UNA		1				
67	93315–43061	BEARING COJINETE DE RODILLOS		1				
68	93101–30M17	OIL SEAL SELLO ACEITE		2				
69	93211–04384	O-RING ANILLO O		2				
70	90105–08036	BOLT, FLANGE TORNILLO		2				
71	90201–08023	WASHER, PLATE ARANDELA PLANA		2				
72	93700–09M00	NIPPLE, GREASE BOQUILLA DE ENGRASAR		1				
73	61A–45361–01–5B	CAP, LOWER CASING FUNDA INFERIOR		1				

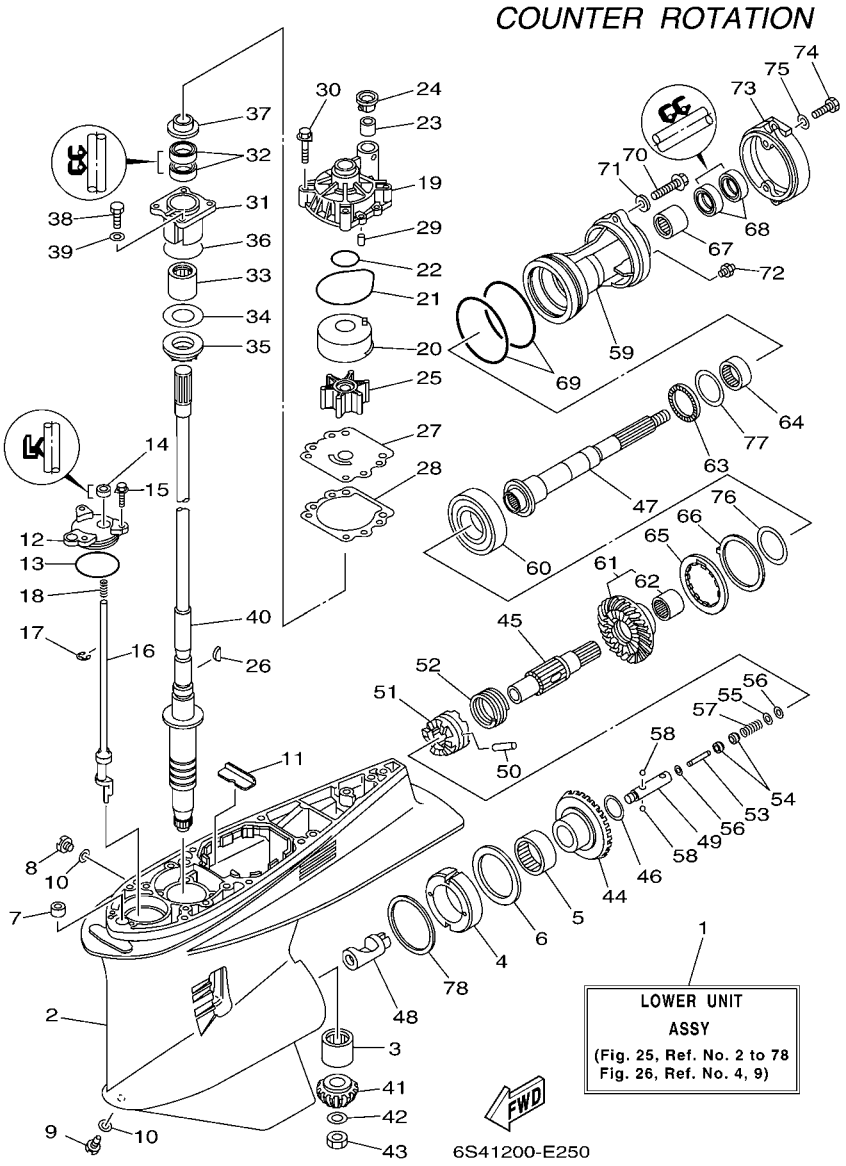

FIG. 25 LOWER CASING & DRIVE 3 IMPULSOR E INFERIOR 3

REF. NO.	PART NO. CODIGO Nº	DESCRIPTION DESCRIPCION	6S33	6S43				REMARKS OBSERVACIONES
74	97095–08020	BOLT PERNO		2				
75	92995–08600	WASHER ARANDELA		2				
76	61A–45577–00	SHIM (T:0.10MM) LAINA (T:0.10MM)		1				UR UR
	61A–45577–10	SHIM (T:0.12MM) LAINA (:0.12MM)		1				UR UR
	61A–45577–20	SHIM (T:0.15MM) LAINA (T:0.15MM)		1				UR UR
	61A–45577–30	SHIM (T:0.18MM) LAINA (T:0.18MM)		1				UR UR
	61A–45577–40	SHIM (T:0.30MM) LAINA (T:0.30MM)		1				UR UR
	61A–45577–50	SHIM (T:0.40MM) LAINA (T:0.40MM)		1				UR UR
	61A–45577–60	SHIM (T:0.50MM) LAINA (T:0.50MM)		1				UR UR
77	6K1–45578–01	SHIM (T:0.10MM) LAINA (T:0.10MM)		1				UR UR
	6K1–45578–10	SHIM (T:0.12MM) LAINA (:0.12MM)		1				UR UR
	6K1–45578–20	SHIM (T:0.15MM) LAINA (T:0.15MM)		1				UR UR
	6K1–45578–30	SHIM (T:0.18MM) LAINA (T:0.18MM)		1				UR UR
	6K1–45578–40	SHIM (T:0.30MM) LAINA (T:0.30MM)		1				UR UR
	6K1–45578–50	SHIM (T:0.40MM) LAINA (T:0.40MM)		1				UR UR
	6K1–45578–60	SHIM (T:0.50MM) LAINA (T:0.50MM)		1				UR UR
78	61A–45567–00	SHIM (T:0.10MM) LAINA(T:0.10MM)		1				UR UR
	61A–45567–10	SHIM (T:0.12MM) LAINA (T:0.12MM)		1				UR UR
	61A–45567–20	SHIM (T:0.15MM) LAINA (T:0.15MM)		1				UR UR
	61A–45567–30	SHIM (T:0.18MM) LAINA (T:0.18MM)		1				UR UR
	61A–45567–40	SHIM (T:0.30MM) LAINA (T:0.30MM)		1				UR UR
	61A–45567–50	SHIM (T:0.40MM) LAINA (T:0.40MM)		1				UR UR
	61A–45567–60	SHIM (T:0.50MM) LAINA (T:0.50MM)		1				UR UR

FIG. 26 LOWER CASING & DRIVE 4 IMPULSOR E INFERIOR 4

COUNTER ROTATION

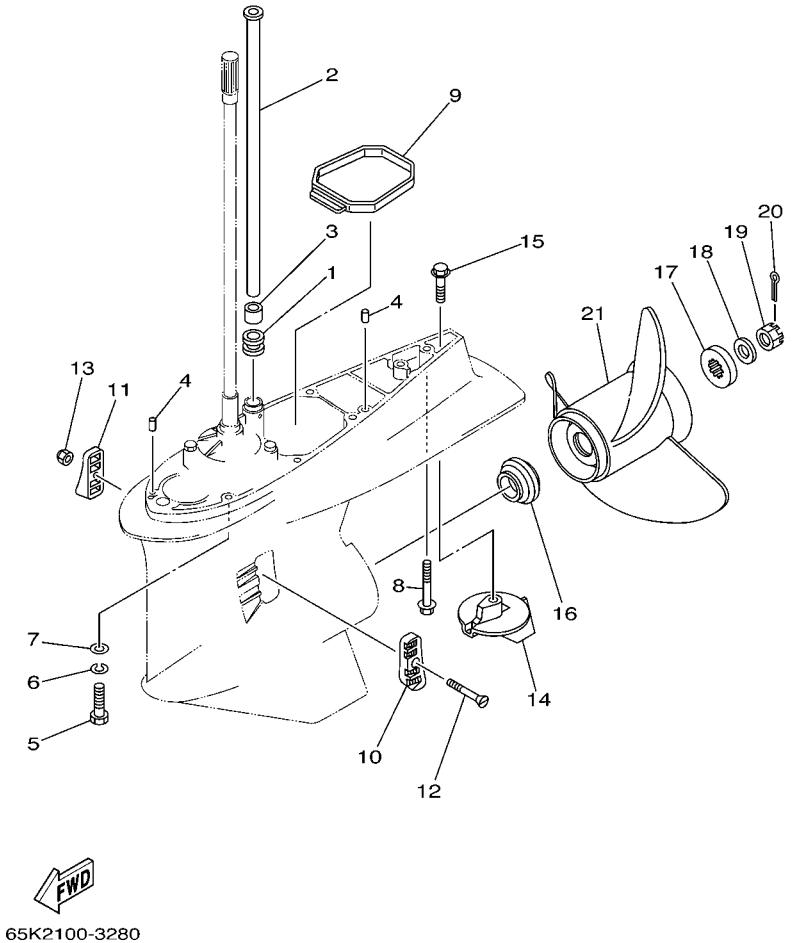

REF. NO.	PART NO. CODIGO Nº	DESCRIPTION DESCRIPCION	6S33	6S43				REMARKS OBSERVACIONES
1	6E5–44366–00	DAMPER, WATER SEAL GOMA DEL SELLO DE AGUA		1				
2	61A–44361–20	TUBE, WATER TUBO DE AGUA		1				X(25.3") X(25.3")
	61A–44361–30	TUBE, WATER TUBO DE AGUA		1				U(30.2") U(30.2")
3	6E5–44365–00	DAMPER, WATER SEAL HULE DE SELLO DE AGUA		1				
4	93608–12M05	PIN, DOWEL PASADOR DE CLAVIJA		2				
5	97095–10045	BOLT PERNO		7				
6	92995–10100	WASHER ARANDELA		7				
7	92995–10600	WASHER ARANDELA		7				
8	90119–10MA2	BOLT, WITH WASHER TORNILLO CON ARANDELA		1				
9	61A–45375–00	DAMPER, SEAL GOMA DE SELLO		1				
10	61A–45214–10	COVER, WATER INLET 1 CUBIERTA ENTRADA AGUA 1		1				
11	61A–45215–10	COVER, WATER INLET 2 CUBIERTA ENTRADA AGUA 2		1				
12	90152–05003	SCREW, COUNTERSUNK TORNILLO EMBUTIDO		1				
13	90185–05002	NUT, SELF-LOCKING TUERCA AUTOBLOCANTE		1				
14	61A–45371–00	TAB-TRIM QUILLA ESTABILIZADOR		1				
15	90105–10M00	BOLT, FLANGE TORNILLO		1				
16	6E5–45987–01	SPACER ESPACIADOR		1				
17	688–45997–01	SPACER ESPACIADOR		1				
18	92990–18200	WASHER ARANDELA PLANA		1				
19	90171–18M04	NUT, CASTLE TUERCA ENTALLADA		1				
20	91490–40030	PIN, COTTER CHAVETA		1				
21	6K1–45970–01–98	PROPELLER (3X15-1/4"X15"-ML) PROPELA (3X15-1/4"X15"-ML)		1				UR UR
	6K1–45972–01–98	PROPELLER (3X13-3/4"X21"-ML) PROPELA (3X13-3/4"X21"-ML)		1				UR UR
	6K1–45974–02–98	PROPELLER (3X13-3/4"X19"-ML1) PROPELA (3X13-3/4"X19"-ML1)		1				UR UR
	6K1–45978–02–98	PROPELLER (3X13-3/4"X17"-ML1) PROPELA (3X13-3/4"X17"-ML1)		1				UR UR
	61B–45972–00–98	PROPELLER (3X14-1/2"X21"-TL) PROPELA (3X14-1/2"X21"-TL)		1				UR UR
	61B–45974–00–98	PROPELLER (3X14-1/2"X19"-TL) PROPELA (3X14-1/2"X19"-TL)		1				UR UR

FIG. 26 LOWER CASING & DRIVE 4 IMPULSOR E INFERIOR 4

COUNTER ROTATION

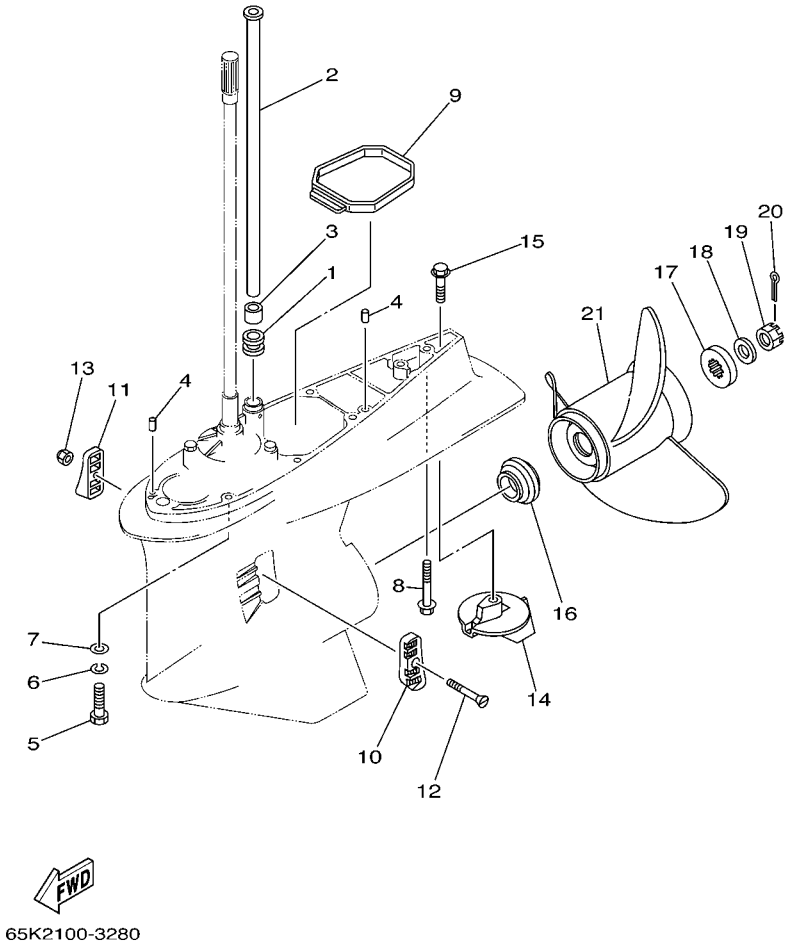

REF. NO.	PART NO. CODIGO Nº	DESCRIPTION DESCRIPCION	6S33	6S43				REMARKS OBSERVACIONES
21	61B–45978–00–98	PROPELLER (3X15"X17"-TL) PROPELA (3X15"X17"-TL)		1				UR UR
	6R1–45970–A1	PROPELLER (3X15-1/4"X19"-ML) PROPELA (3X15-1/4"X19"-ML)		1				UR UR
	6R1–45972–A0	PROPELLER (3X14-7/8"X21"-ML) PROPELA (3X14-7/8"X21"-ML)		1				UR UR
	6R1–45974–A0	PROPELLER (3X14-1/2"X23"-ML) PROPELA (3X14-1/2"X23"-ML)		1				UR UR
	6R1–45976–A0	PROPELLER (3X15-1/4"X15"-ML) PROPELA (3X15-1/4"X15"-ML)		1				UR UR
	6R1–45978–A0	PROPELLER (3X15-1/4"X17"-ML) PROPELA (3X15-1/4"X17"-ML)		1				UR UR

FIG. 27 FUEL TANK — DEPOSITO DE COMBUSTIBLE

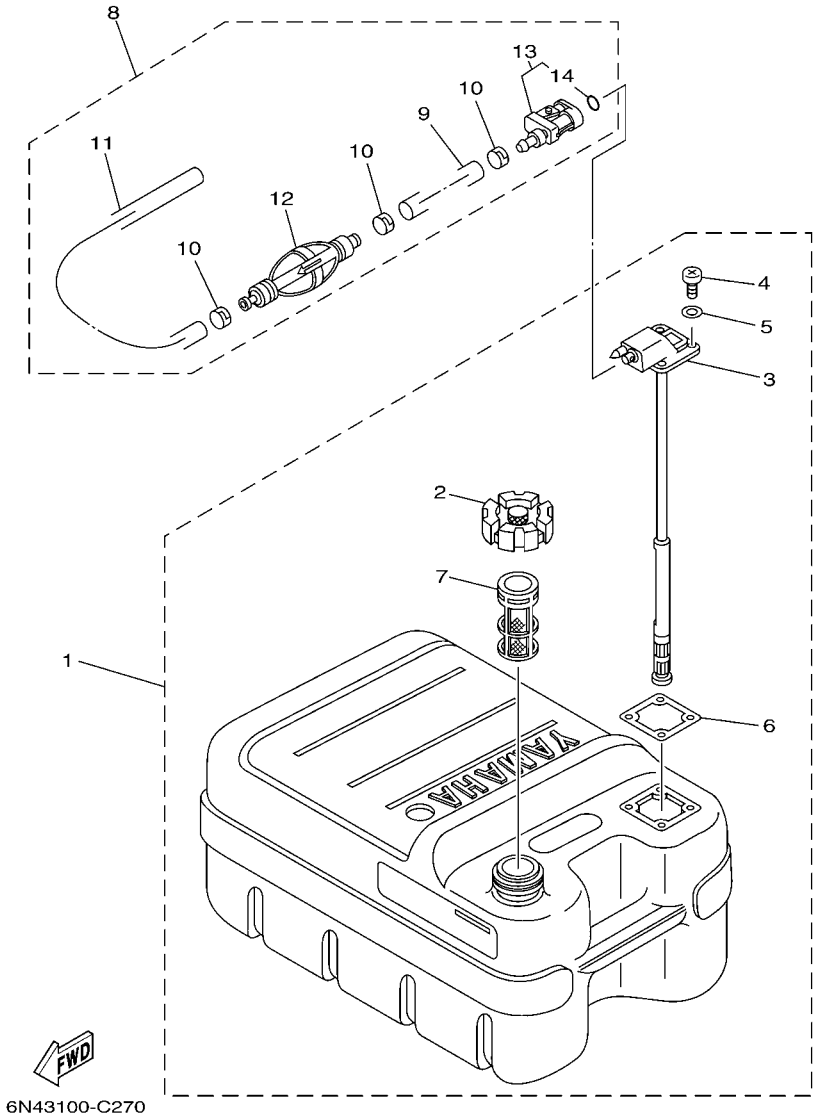

REF. NO.	PART NO. CODIGO Nº	DESCRIPTION DESCRIPCION	6S33	6S43				REMARKS OBSERVACIONES
1	6YJ–24201–10	FUEL TANK ASSY (24L) TANQUE DEL COMBUSTIBLE (24L)	1	1				AP FOR CAR,CHN AP FOR CAR,CHN
2	6YJ–24610–01	.CAP ASSY .TAPA COMPLETA	1	1				
3	6Y1–24260–12	.FUEL METER ASSY .MEDIDOR DE COMBUSTIBLE COMPL.	1	1				WITH INDICATOR WITH INDICATOR
4	90157–05M19	.SCREW, PAN HEAD .TORNILLO CABEZA CONICA PLANA	4	4				
5	6Y1–24329–00	.SEAL .SELLO	4	4				
6	6Y1–24268–00	.GASKET, FUEL METER .EMPAQ MEDIDOR DE COMBUSTIBLE	1	1				
7	6YJ–24167–00	.STRAINER .COLADOR	1	1				
8	6Y2–24306–45	FUEL PIPE COMP. 1 TUBO COMBUST. COMPL 1	1	1				AP FOR CAR,CHN AP FOR CAR,CHN
9	90445–13M01	.HOSE (L2050) .MANGUERA (L2050)	1	1				
10	6E5–24351–51	.BAND 1 .ABRAZADERA 1	3	3				
11	90445–13M35	.HOSE (L250) .MANGUERA (L250)	1	1				
12	6Y2–24360–60	.PRIMER PUMP ASSY .SOPORTE BOMBA	1	1				
13	6Y2–24305–06	.FUEL PIPE JOINT COMP. 2 .CONECTOR MANGUERA COMBUST. 2	1	1				
14	93210–08287	..O-RING ..ANILLO O	1	1				

FIG. 28 STEERING GUIDE ATTACHMENT 1 ADITAMENTO GUIA DE GOBIERNO 1

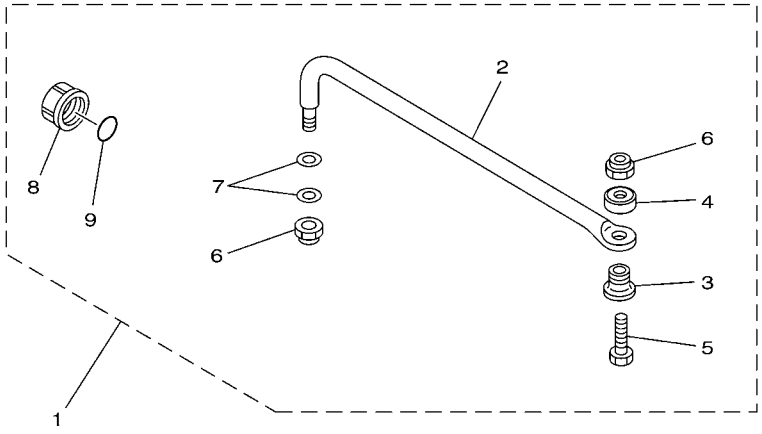

67H0100-9290

REF. NO.	PART NO. CODIGO Nº	DESCRIPTION DESCRIPCION	6S33	6S43				REMARKS OBSERVACIONES
1	6E5–61350–02	STEERING GUIDE ATTACHMENT KIT ESTUCHE ADITAMENTO GUIA DE TIM	1					AP AP
2	6E5–61351–01	.ROD, STEERING LINK .VARILLA ESLABON DIRECCION	1					
3	90387–10M61	.COLLAR .ESPACIADOR	1					
4	90560–12M01	.SPACER .SEPARADOR	1					
5	6E5–61355–00	.BOLT .TORNILLO	1					
6	90185–09M01	.NUT, SELF-LOCKING .TUERCA AUTOBLOCANTE	2					
7	90201–10M20	.WASHER, PLATE .ARANDELA PLANA	2					
8	6E5–43145–01	.CAP, CLAMP BRACKET .TAPA	1					
9	93210–16275	.O-RING .ANILLO O	1					

FIG. 29 STEERING GUIDE ATTACHMENT 2 ADITAMENTO GUIA DE GOBIERNO 2

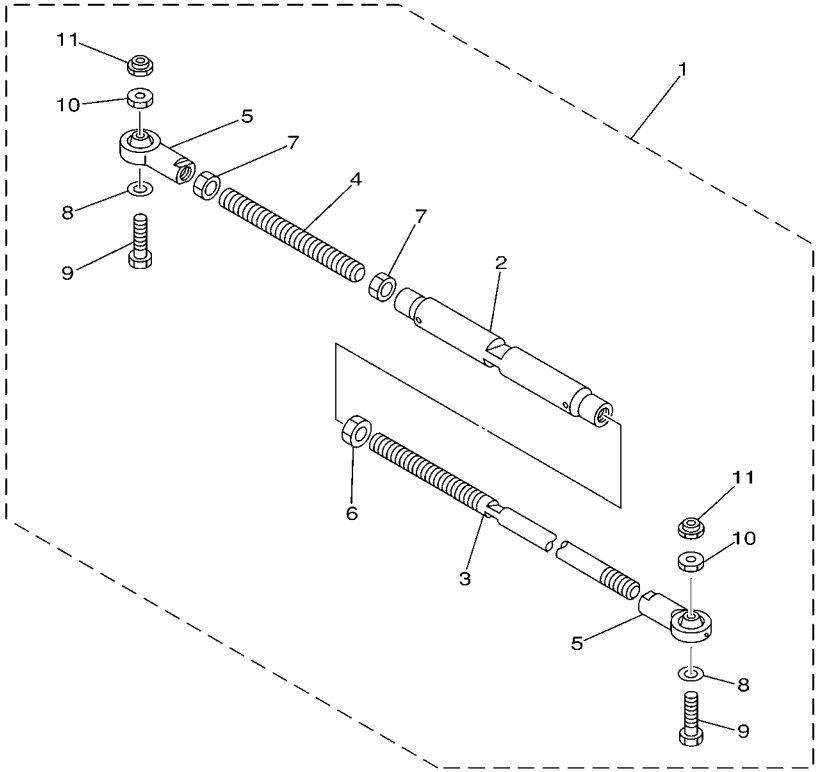

67H0100-0300

REF. NO.	PART NO. CODIGO Nº	DESCRIPTION DESCRIPCION	6S33	6S43				REMARKS OBSERVACIONES
1	6E5–61301–01	TWIN KIT (L:600-800MM) KIT ADITAMENTO (L:600-800MM)		1				AP AP
2	6E5–61313–00	.ADJUSTER .AJUSTADOR		1				
3	6E5–61311–11	.TIE BAR .BARRA SEPARADORA		1				
4	6E5–61315–00	.TIE BAR .ROTOR DE BOMBA AGUA		1				
5	6E5–61303–00	.STEERING AXLE COMP. .OJO-DIRECCION COMPL.		2				
6	90170–14M06	.NUT .TUERCA		1				
7	95380–14700	.NUT .TUERCA		2				
8	90201–10M76	.WASHER, PLATE .ARANDELA PLANA		2				
9	90101–09M70	.BOLT .TORNILLO		2				
10	90170–09M05	.NUT .TUERCA		2				
11	90185–09M01	.NUT, SELF-LOCKING .TUERCA AUTOBLOCANTE		2				

FIG. 30 REMOTE CONTROL BOX CONTROL REMOTO COMPLETO

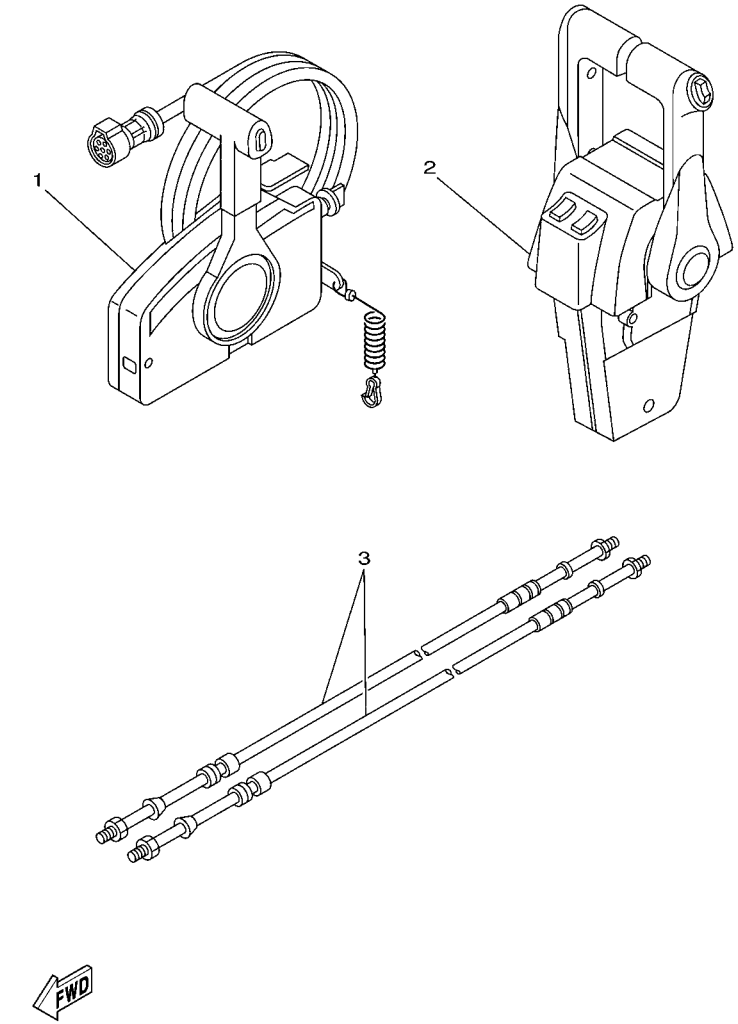

REF. NO.	PART NO. CODIGO Nº	DESCRIPTION DESCRIPCION	6S33	6S43				REMARKS OBSERVACIONES
1	703–48205–17	REMOTE CONTROL ASSY (10P) REMOTO CONTROL COMPL. (10P)	1					AP FOR CAR,CHN AP FOR CAR,CHN
2	704–48207–P1	REMOTE CONTROL ASSY REMOTO CONTROL COMPL.		1				AP FOR CAR,CHN AP FOR CAR,CHN
3	701–48320–80	CABLE, REMOTE CONTROL L=17F CABLE CONTROL REMOTO L=17F	2	2				UR UR
	701–48350–50	CABLE, REMOTE CONTROL L=26F CABLE CONTROL REMOTO L=26F	2	2				UR UR

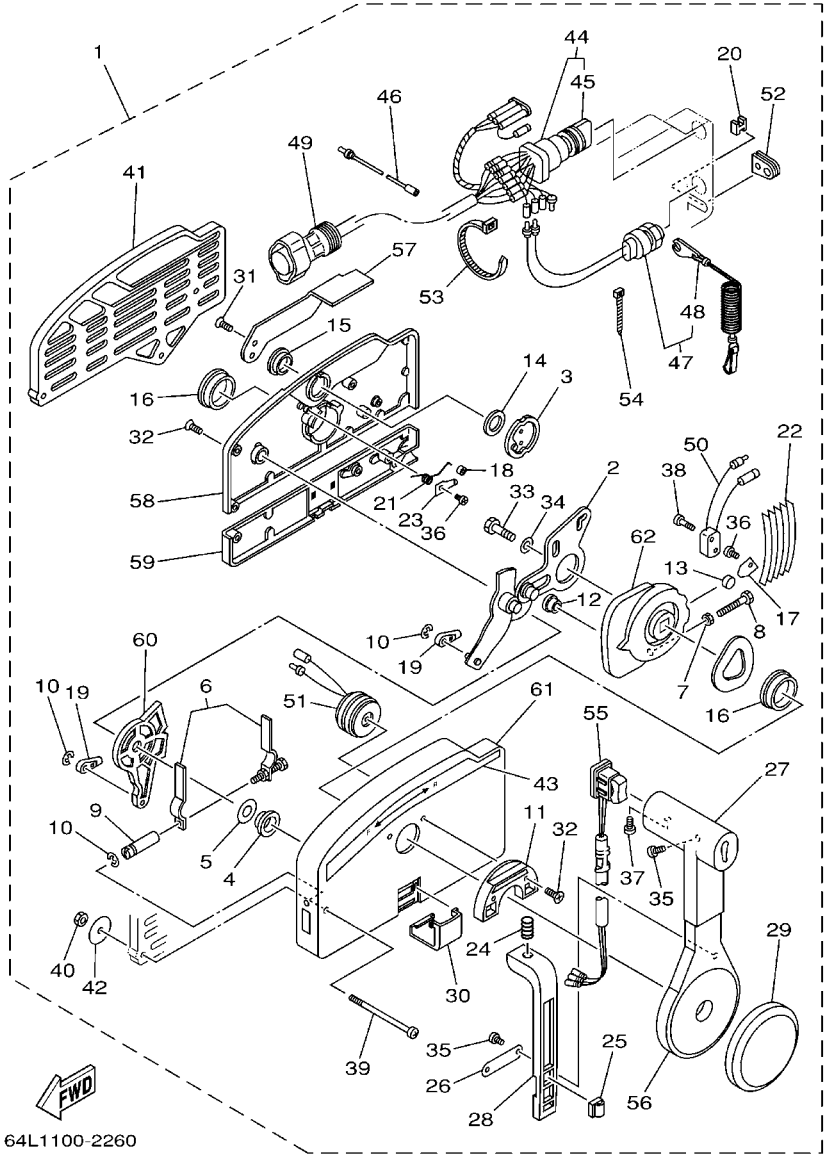

64L1100-2260

FIG. 31 REMOTE CONTROL ASSY 1 CONTROL REMOTO COMPL 1

REF. NO.	PART NO. CODIGO Nº	DESCRIPTION DESCRIPCION	6S33	6S43				REMARKS OBSERVACIONES
1	703–48205–17	REMOTE CONTROL ASSY (10P) REMOTO CONTROL COMPL. (10P)	1					AP FOR CAR,CHN AP FOR CAR,CHN
2	703–48261–01	.ARM, THROTTLE .BRAZO ACELERADOR	1					
3	703–48153–00	.SHAFT, FREE ACCEL. .EJE	1					
4	703–48235–00	.BUSHING .BUJE	1					
5	703–48268–00	.SPACER .ESPACIADOR 3	1					
6	703–48264–00	.FRICTION, THROTTLE .FRICCION DE ACELERADOR	1					
7	95380–05600	.NUT .TUERCA	1					
8	97380–05025	.BOLT .TORNILLO HEXAGONAL	1					
9	703–48265–00	.SHAFT, FRICTION .EJE FRICCION	1					
10	93430–06024	.CIRCLIP .SEGURO	3					
11	703–48245–00	.PLATE, LOCK .PLACA CERRADURA	1					
12	703–48252–00	.ROLLER, CAM .RODILLO LEVA	1					
13	701–48248–00	.ROLLER, FREE ACCEL. .RODILLO ACELERADOR LIBRE	1					
14	703–48198–00	.WASHER, WAVE .RONDANA ONDULADA 3	1					
15	703–48243–00	.BUSHING .BUJE 3	1					
16	703–48236–00	.BUSHING 1 .BUJE	2					
17	703–48189–00	.RETAINER .RETENEDOR	1					
18	703–48234–00	.ROLLER, DETENT .RODILLO	1					
19	703–48345–01	.CABLE END, REMOTE CONTROL 2 .TERMINAL CABLE DE CONTROL REM	2					
20	703–48358–00	.ANCHOR, CABLE .ABRAZADERA CABLE	1					
21	703–48244–00	.SPRING, FREE ACCEL. .RESORTE ACELERADOR LIBRE	1					
22	703–48238–00	.SPRING, DETENT .RESORTE	5					
23	703–48246–00	.SPACER .ESPACIADOR	1					
24	703–48227–00	.SPRING, NEUTRAL LOCK .RESORTE DE SEGURO	1					
25	703–82594–00	.CLAMP .GRAMPA	1					WITH PT/T SW. WITH PT/T SW.
26	703–48226–00	.PLATE, STOPPER .PLACA RETEN	1					
27	703–48222–00	.GRIP, CONTROL LEVER .MANGO DE PALANCA CONTROL	1					SINGLE SINGLE

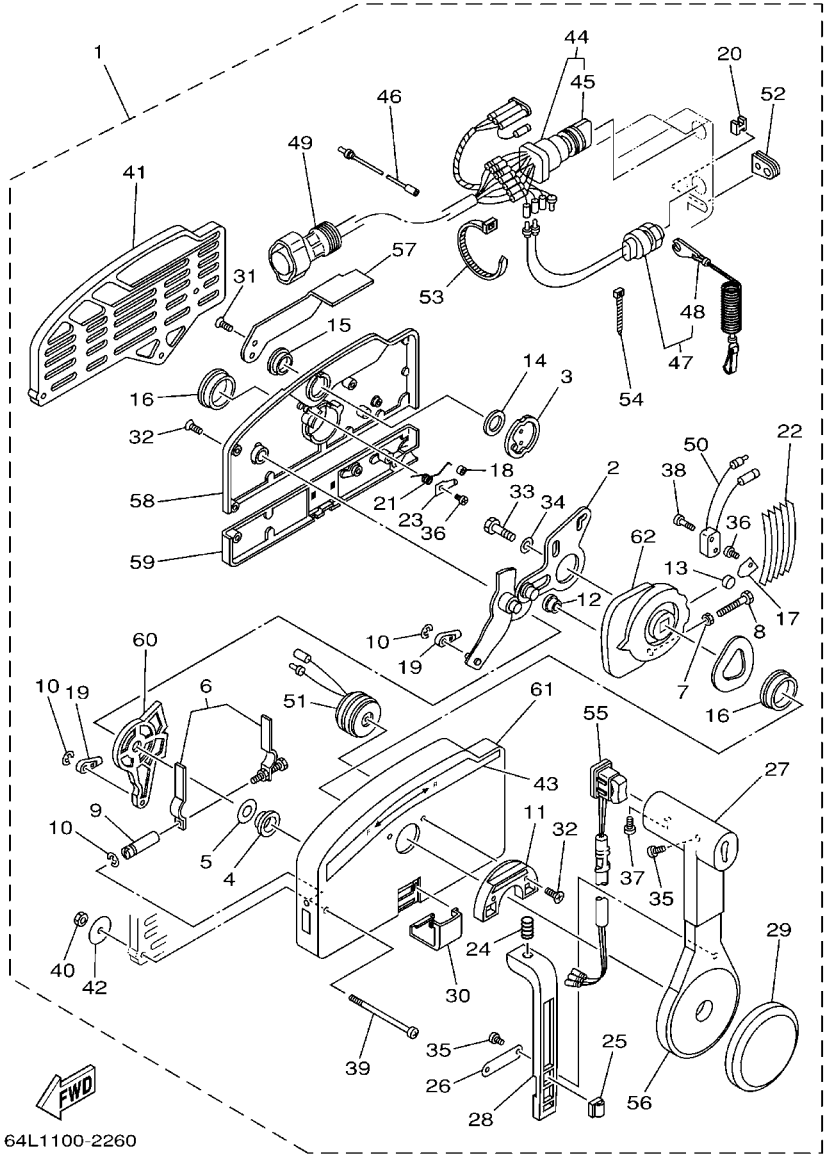

FIG. 31 REMOTE CONTROL ASSY 1 CONTROL REMOTO COMPL 1

REF. NO.	PART NO. CODIGO Nº	DESCRIPTION DESCRIPCION	6S33	6S43				REMARKS OBSERVACIONES
28	703–48223–00	.LOCK, NEUTRAL .CERRADURA NEUTRO	1					
29	703–48225–00	.COVER .CUBIERTA	1					
30	703–48219–00	.COVER, LEAD .CUBIERTA	1					
31	703–48281–00	.SCREW .TORNILLO 1	2					
32	703–48282–00	.SCREW .TORNILLO 2	7					
33	97380–08030	.BOLT .TORNILLO HEXAGONAL	1					
34	92990–08600	.WASHER, PLATE .ARANDELA PLANA	1					
35	98580–04010	.SCREW, PAN HEAD .TORNILLO DE CABEZA CRUZADA	3					
36	98580–04006	.SCREW, PAN HEAD .TORNILLO DE CABEZA CRUZADA	2					
37	98580–05010	.SCREW, PAN HEAD .TORNILLO DE CABEZA CRUZADA	1					
38	98580–03015	.SCREW, PAN HEAD .TORNILLO DE CABEZA CRUZADA	2					
39	703–48291–10	.SCREW (M6) .TORNILLO (M6)	3					
40	95380–06600	.NUT, HEXAGON .TUERCA	3					
41	703–48293–10	.SPACER, REMOTE CONTROL .ESPACIADOR	1					SINGLE SINGLE
42	701–48287–00	.WASHER .ARANDELA	3					
43	703–48215–00	.GRAPHIC .CALCOMANIA 1	1					
44	703–82510–43	.MAIN SWITCH ASSY .CONJUNTO DE LLAVE IGNICION	1					
45	703–82577–00	..CAP, KEY ..TAPA	1					
46	703–82531–00	.WIRE, LEAD (L70) .CABLE CONDUCTOR (L70)	1					
47	688–82575–01	.ENGINE STOP SWITCH ASSY .INTERRUPTOR DE PARADA COMPL	1					
48	682–82556–00	..LANYARD, STOP SWITCH ..RETENER	1					
49	688–8258A–20	.EXTENSION, WIRE HARNESS (4.9M .EXTENSION, ARNES DE CABLES (4	1					(10P) (10P)
50	703–82540–00	.NEUTRAL SWITCH ASSY .INTERRUPTOR NEUTRAL COMPL	1					
51	703–83383–02	.BUZZER .ZUMBADOR	1					
52	703–48284–00	.GROMMET .TAPON 1	1					
53	703–82591–00	.BAND .BANDA	1					
54	703–82592–00	.BAND .BANDA	1					

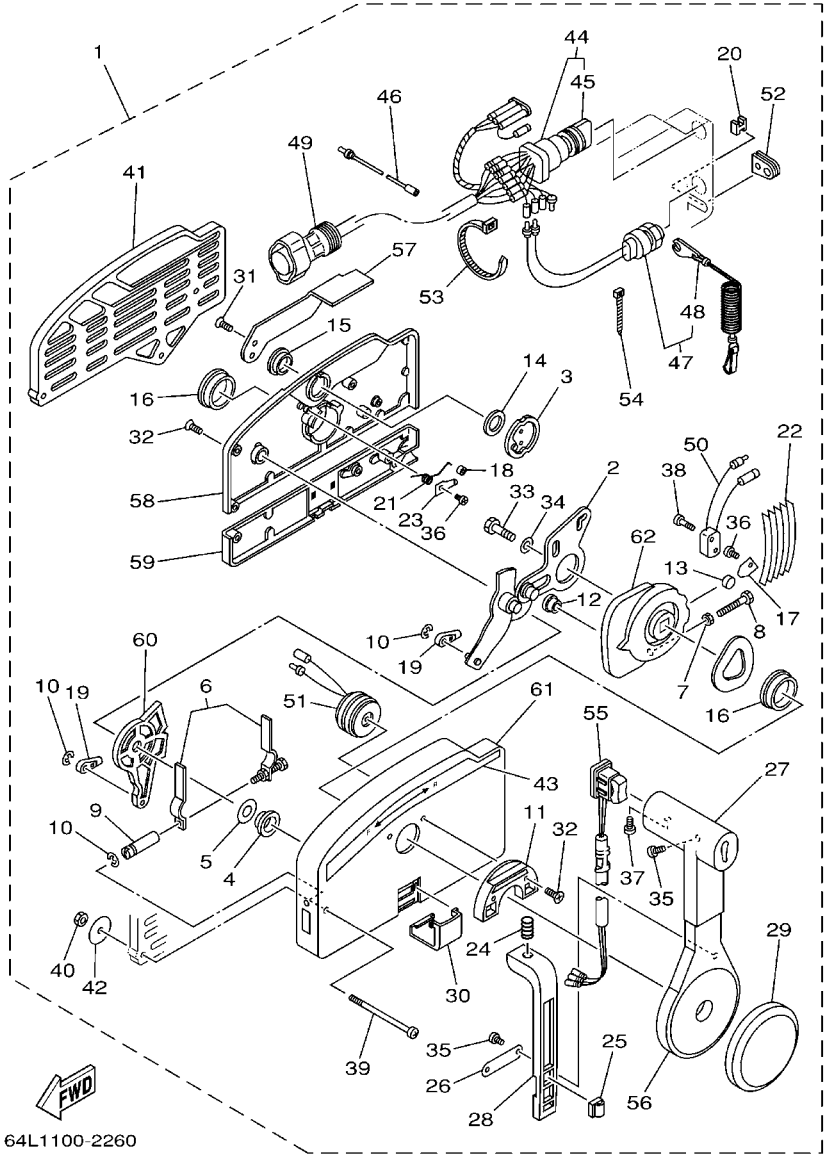

64L1100-2260

FIG. 31 REMOTE CONTROL ASSY 1 CONTROL REMOTO COMPL 1

REF. NO.	PART NO. CODIGO Nº	DESCRIPTION DESCRIPCION	6S33	6S43				REMARKS OBSERVACIONES
55	703–82563–02	.TRIM & TILT SWITCH ASSY .INTERRUPTOR DE INCLINACION	1					WITH PT/T SW. WITH PT/T SW.
56	703–48221–00	.LEVER, CONTROL .PALANCA CONTROL	1					
57	703–48152–00	.KNOB, FREE ACCEL. .PERILLA	1					
58	703–48212–00	.BACK PLATE 1 .PLACA TRASERA 1	1					
59	703–48213–00	.BACK PLATE 2 .PLACA TRASERA 2	1					
60	703–48271–00	.ARM, SHIFT .BRAZO CAMBIADOR	1					
61	703–48211–01	.HOUSING,1 .CAJA	1					
62	703–48232–00	.GEAR .ENGRANAJE 1	1					

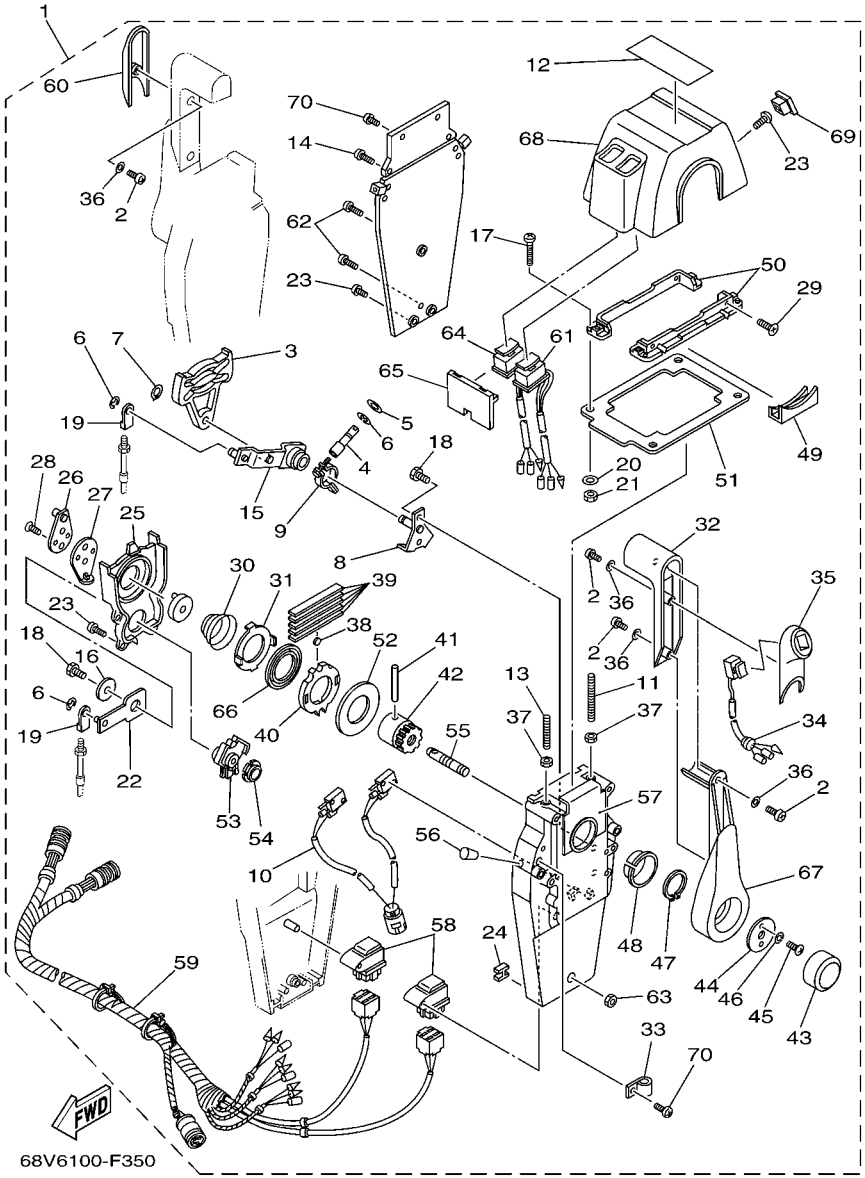

FIG. 32 REMOTE CONTROL ASSY 2 CONTROL REMOTO COMPL 2

REF. NO.	PART NO. CODIGO Nº	DESCRIPTION DESCRIPCION	6S33	6S43				REMARKS OBSERVACIONES
1	704–48207–P1	REMOTE CONTROL ASSY REMOTO CONTROL COMPL.		1				AP FOR CAR,CHN AP FOR CAR,CHN
2	704–48128–00	.SCREW 2 .TORNILLO 2		6				
3	EL8–48251–00	.PLATE, CAM .PLACA,LEVA		2				
4	704–48265–00	.SHAFT, FRICTION .EJE FRICCION		2				
5	701–48246–00	.SPACER .ESPACIADOR		2				
6	93430–06024	.CIRCLIP .SEGURO		8				
7	EL8–48259–00	.CIRCLIP 1 .SEGURO		2				
8	704–48262–00	.SHAFT, THROTTLE .EJE DE ACELERADOR		2				
9	704–48264–00	.THROTTLE, FRICTION .FRICCION DE ACELERADOR		2				
10	704–82540–30	.NEUTRAL SWITCH ASSY .INTERRUPTOR NEUTRAL COMPL		1				
11	EL8–48281–00	.SCREW .TORNILLO 1		2				
12	704–48215–30	.GRAPHIC .CALCOMANIA 1		1				
13	704–48281–00	.SCREW .TORNILLO 1		2				
14	97890–05025	.SCREW, PAN HEAD .TORNILLO		4				
15	704–48261–00	.ARM, THROTTLE .BRAZO ACELERADOR		2				
16	EL8–48191–00	.WASHER 1 .ARANDELA		2				
17	704–48283–00	.SCREW .TORNILLO 3		4				
18	97380–06018	.BOLT .TORNILLO HEXAGONAL		6				
19	703–48345–01	.CABLE END, REMOTE CONTROL 2 .TERMINAL CABLE DE CONTROL REM		4				
20	704–48287–00	.WASHER .ARANDELA		4				
21	95380–05600	.NUT .TUERCA		4				
22	704–48271–00	.ARM, SHIFT .BRAZO CAMBIADOR		2				
23	EL8–48127–00	.SCREW 1 .TORNILLO 1		18				
24	703–48358–00	.ANCHOR, CABLE .ABRAZADERA CABLE		2				
25	704–48231–00	.HOUSING, GEAR .CAJA,ENGRANAJE		2				
26	EL8–48241–00	.ARM, DRIVE .BRAZO,MANDO		2				
27	EL8–48254–00	.STOPPER, THROTTLE ADJUSTING .TAPON		2				

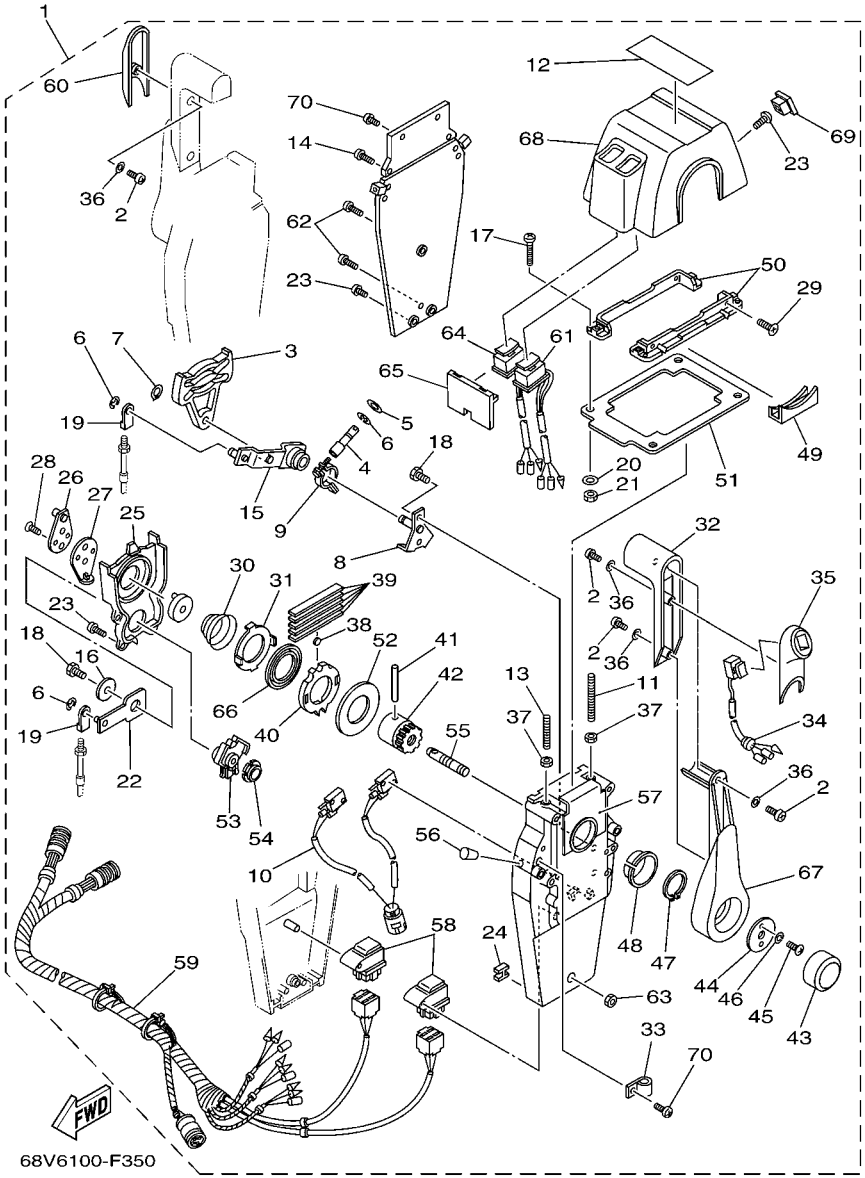

FIG. 32 REMOTE CONTROL ASSY 2 CONTROL REMOTO COMPL 2

REF. NO.	PART NO. CODIGO Nº	DESCRIPTION DESCRIPCION	6S33	6S43				REMARKS OBSERVACIONES
28	92780–06020	.SCREW, FLAT HEAD .TORNILLO CABEZA PLANA		4				
29	98780–05018	.SCREW, FLAT HEAD .TORNILLO CABEZA PLANA		4				
30	EL8–48244–00	.SPRING, FREE ACCEL. .RESORTE ACELERADOR LIBRE		2				
31	EL8–48245–00	.PLATE, LOCK .PLACA CERRADURA		2				
32	704–48222–P0	.GRIP, CONTROL LEVER .MANGO DE PALANCA CONTROL		2				
33	704–82594–00	.CLAMP .GRAMPA		1				
34	704–82563–51	.TRIM & TILT SWITCH ASSY .INTERRUPTOR DE INCLINACION		1				
35	704–48229–P1	.GRIP, CONTROL LEVER .MANGO DE PALANCA CONTROL 2		1				
36	92990–05300	.WASHER, INTERNAL TOOTH .ARANDELA PLANA		6				
37	95380–06600	.NUT, HEXAGON .TUERCA		4				
38	701–48248–00	.ROLLER, FREE ACCEL. .RODILLO ACELERADOR LIBRE		2				
39	704–48238–00	.SPRING, DETENT .RESORTE		10				
40	704–48232–P1	.GEAR .ENGRANAJE 1		2				
41	EL8–48164–00	.PIN 2 .PASADOR 2		2				
42	704–48242–10	.SHAFT, DRIVE .EJE, PROPULSION		2				
43	6X3–48225–20	.COVER .CUBIERTA		2				
44	704–48192–00	.WASHER 2 .RONDANA 2		2				
45	97890–06018	.SCREW, PAN HEAD .TORNILLO		4				
46	92990–06300	.WASHER, INTERNAL TOOTH .ARANDELA PLANA		4				
47	EL8–48279–00	.CIRCLIP 2 .SEGURO2		2				
48	704–48234–00	.BUSHING 1 .BUJE		2				
49	704–48219–P0	.COVER, LEAD .CUBIERTA		2				
50	704–48144–20	.PLATE, STOPPER 2 .PLACA, RETEN 2		2				
51	704–48176–10	.GROMMET .TOPON		1				
52	704–48192–P0	.WASHER 2 .RONDANA 2		2				
53	704–48233–00	.GEAR 2 .ENGRANAJE 2		2				
54	704–48235–00	.BUSHING .BUJE		2				

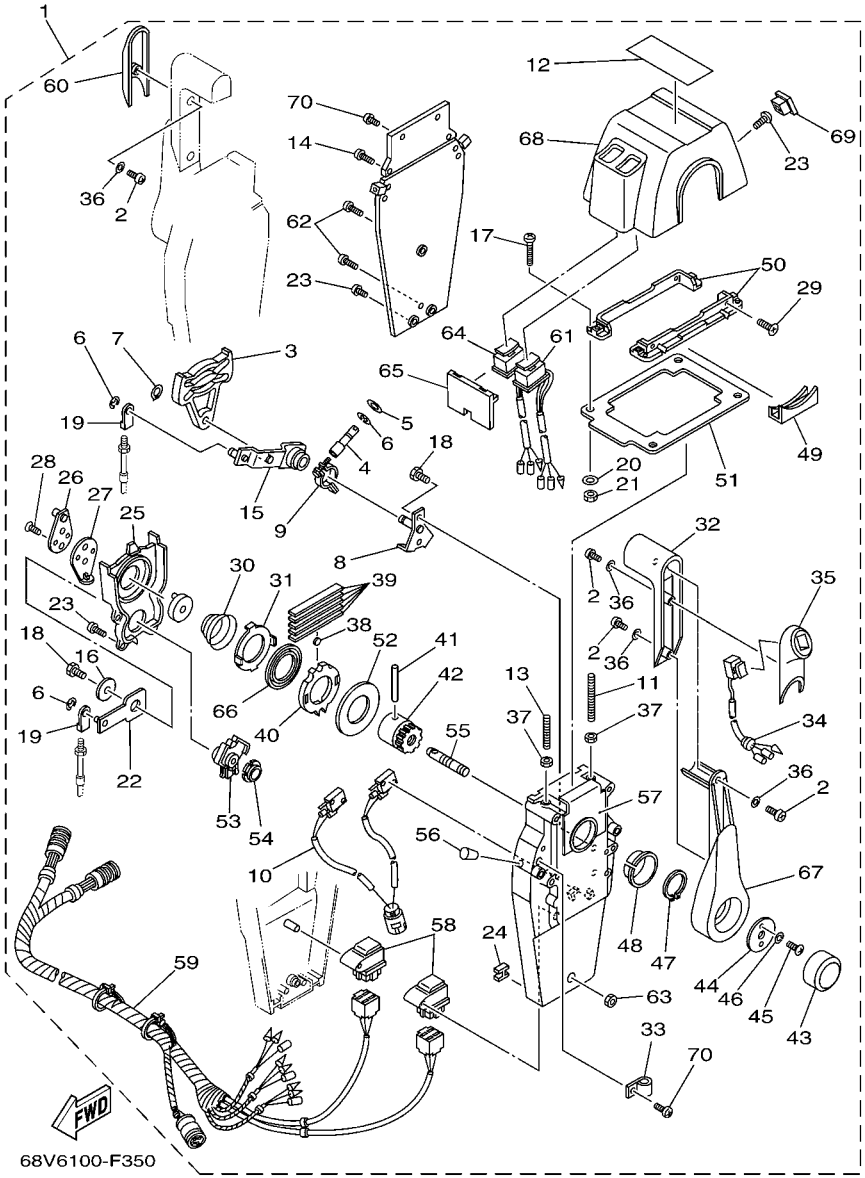

FIG. 32 REMOTE CONTROL ASSY 2 CONTROL REMOTO COMPL 2

REF. NO.	PART NO. CODIGO Nº	DESCRIPTION DESCRIPCION	6S33	6S43				REMARKS OBSERVACIONES
55	704–48153–00	.SHAFT, FREE ACCEL. .EJE		2				
56	704–48166–00	.PLUG .TAPON		2				
57	704–48284–P0	.GROMMET .TAPON 1		2				
58	704–81950–10	.RELAY ASSY .RELE COMPLETO		2				
59	704–82590–10	.WIRE HARNESS ASSY .CONJUNTO DE CABLES		1				
60	704–48229–R0	.GRIP, CONTROL LEVER .MANGO DE PALANCA CONTROL 2		1				
61	704–82563–H1	.TRIM & TILT SWITCH ASSY .INTERRUPTOR DE INCLINACION		1				
62	704–48128–00	.SCREW 2 .TORNILLO 2		3				
63	704–48156–00	.NUT 1 .TUERCA 1		1				
64	704–82563–J1	.TRIM & TILT SWITCH ASSY .INTERRUPTOR DE INCLINACION		1				
65	704–48285–10	.GROMMET 2 .TAPON 2		1				
66	704–48178–00	.PLATE, SHIFT .PLACA		2				
67	704–48221–P0	.LEVER, CONTROL .PALANCA CONTROL		2				
68	704–48119–41	.COVER .CUBIERTA		1				
69	704–48167–11	.PLUG .TAPON AGUJERO		1				
70	97890–05016	.SCREW, PAN HEAD .TORNILLO		5				

FIG. 33 METER MEDIDOR

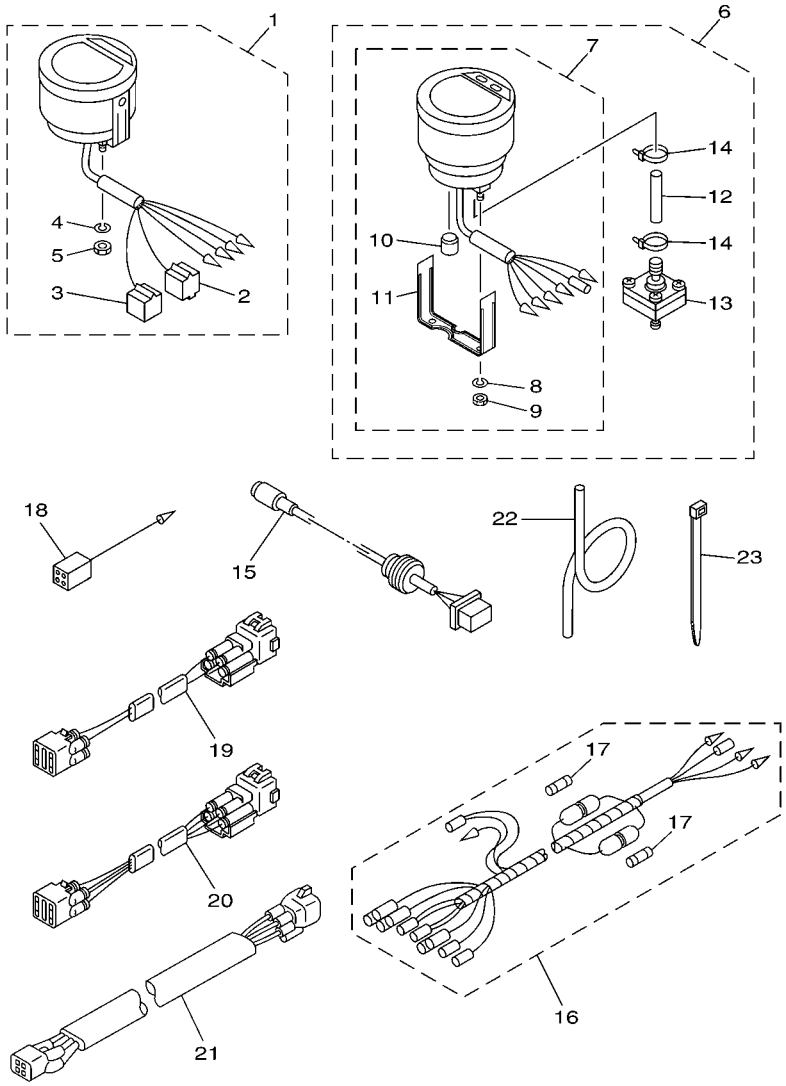

6S33200-F330

REF. NO.	PART NO. CODIGO Nº	DESCRIPTION DESCRIPCION	6S33	6S43				REMARKS OBSERVACIONES
1	6Y5–8350T–03	DIGITAL TACHOMETER ASSY TACOMETRO DIGGITAL COMPLETO	1	1				AP CAR,CHN AP CAR,CHN
2	9E450–04433	.CONNECTOR .CONECTOR	1	1				M-4-W M-4-W
3	9E450–04533	.CONNECTOR .CONECTOR	1	1				F-4-W F-4-W
4	92990–04100	.WASHER, SPRING .ARANDELA PLANA	2	2				
5	95380–04600	.NUT .TUERCA	2	2				
6	6Y5–83500–S5	DIGITAL SPEEDOMETER ASSY VELOCIMETRO DIGITAL COMPLETO	1					AP CAR,CHN AP CAR,CHN
7	6Y5–83570–S5	.SPEEDOMETER ASSY .VELOCIMETRO COMPLETO	1					
8	92990–04100	..WASHER, SPRING ..ARANDELA PLANA	2					
9	95380–04600	..NUT ..TUERCA	2					
10	6Y5–83533–T2	..GROMMET ..ANILLO PROTECTOR	1					
11	6Y5–8355X–T1	..BRACKET, METER 1 ..SOSTEN	1					
12	6Y5–83557–31	.TUBE .ENCHUFE DE ACEITE	1					
13	6Y5–83728–00	.CONNECTOR ASSY .CONEXION COMPLET	1					
14	90465–11M10	.CLAMP .BRIDA	2					
15	6Y5–87122–S0	CORD ASSY 1 CABLE COMPLETA 1	1					AP CAR,CHN AP CAR,CHN
16	6Y5–83553–M0	WIRE, LEAD (L=2.5M) CABLE CONDUCTOR (L=2.5M)	1					AP CAR,CHN AP CAR,CHN
	6Y5–83553–00	WIRE, LEAD (L=2.5M) CABLE CONDUCTOR (L=2.5M)		1				AP CAR,CHN AP CAR,CHN
17	1E6–82151–00	.FUSE (10A) .FUSIBLE (10A)	2					FOR 6Y5-83553-M0 FOR 6Y5-83553-M0
	1E6–82151–00	.FUSE (10A) .FUSIBLE (10A)		1				FOR 6Y5-83553-00 FOR 6Y5-83553-00
18	6Y5–82117–00	WIRE, LEAD (BLACK) (L300) CABLE, CONDUCTOR (NEGRO)	1					AP CAR,CHN AP CAR,CHN
19	6R3–82521–70	WIRE, LEAD CABLE CONDUCTOR	1					AP CAR,CHN 4P,7M AP CAR,CHN 4P,7M
	6R3–82521–80	WIRE, LEAD CABLE CONDUCTOR		1				AP CAR,CHN 4P,8M AP CAR,CHN 4P,8M
20	6R3–82553–70	EXTENSION, WIRE LEAD (L=7.0M) CABLE (L=7.0M)	1					AP CAR,CHN (4P) AP CAR,CHN (4P)
	6R3–82553–80	EXTENSION, WIRE LEAD (L=8.0M) CABLE (L=8.0M)		1				AP CAR,CHN (4P) AP CAR,CHN (4P)
21	6R3–82553–30	EXTENSION, WIRE LEAD (L=3.0M) CABLE (L=3.0M)		2				AP CAR,CHN (4P) AP CAR,CHN (4P)
22	6Y5–83557–00	TUBE (6M) TUBO (6M)	1					AP CAR,CHN AP CAR,CHN
23	90465–11M10	CLAMP BRIDA	2					AP CAR,CHN AP CAR,CHN

FIG. 34 SWITCH & PANEL — PANEL DE INTERRUPTOR

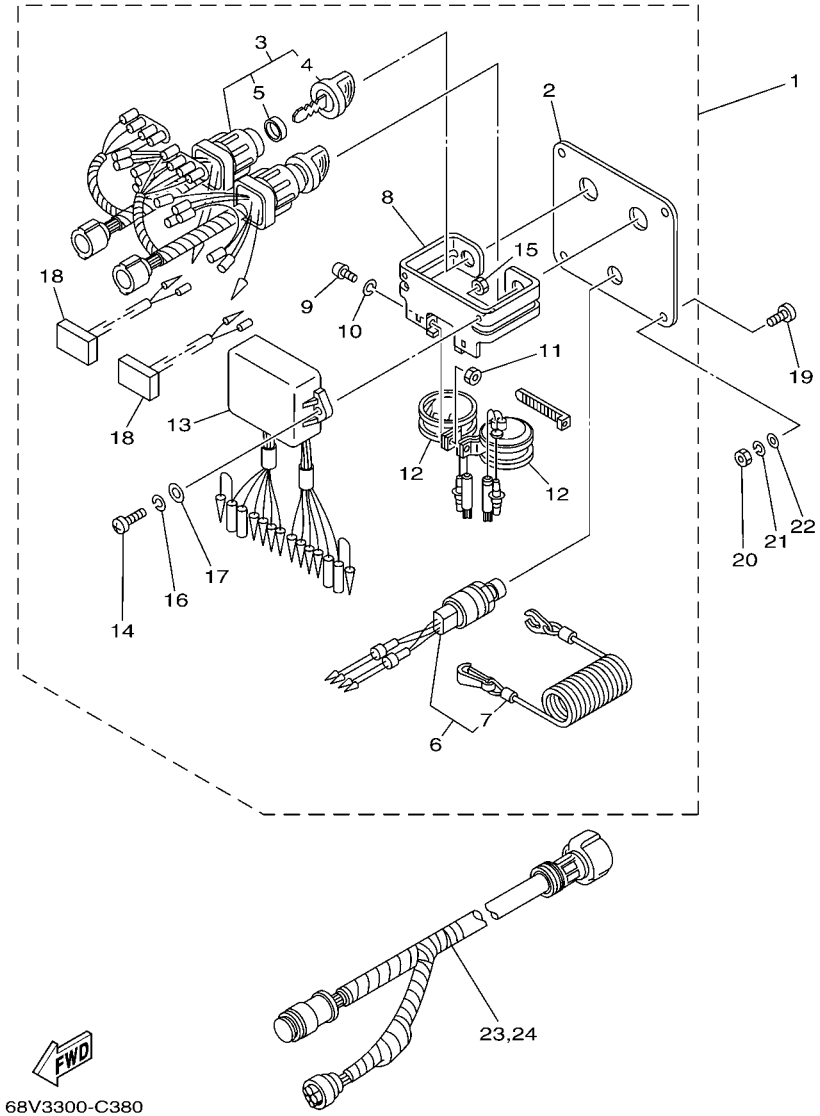

REF. NO.	PART NO. CODIGO Nº	DESCRIPTION DESCRIPCION	6S33	6S43				REMARKS OBSERVACIONES
1	6K1–82570–08	PANEL SWITCH ASSY INTERRUPTOR DE PANEL COMPL.		1				AP CAR,CHN AP CAR,CHN
2	6K1–82571–02	.PLATE, PANEL SWITCH .PANEL DE INTERRUPTOR		1				
3	6K1–82510–06	.MAIN SWITCH ASSY .CONJUNTO DE LLAVE IGNICION		2				
4	703–82577–00	..CAP, KEY ..TAPA		1				
5	6K1–82532–00	..CAP ..TAPA		1				
6	6K1–82575–00	.ENGINE STOP SWITCH ASSY .INTERRUPTOR DE PARADA COMPL		1				
7	682–82556–00	..LANYARD, STOP SWITCH ..RETENER		1				
8	6K1–83614–01	.BRKT .SOPORTE		1				
9	98980–05010	.SCREW, BIND .TORNILLO DE LIGAR		2				
10	92990–05100	.WASHER, SPRING .ARANDELA PLANA		2				
11	95380–05600	.NUT .TUERCA		2				
12	688–83383–11	.BUZZER .ZUMBADOR		2				
13	6K1–85830–01	.CONTROL UNIT ASSY .UNIDAD CONTROL		1				
14	98980–06020	.SCREW, BIND .TORNILLO DE LIGAR		2				
15	95380–06600	.NUT, HEXAGON .TUERCA		2				
16	92990–06100	.WASHER, SPRING .ARANDELA PLANA		2				
17	92990–06600	.WASHER, PLATE .ARANDELA PLANA		2				
18	6K1–81980–00	.DIODE ASSY .CONJUNTO DIODO		2				
19	90149–05M05	SCREW TORNILLO DE REGLAJE		4				AP CAR,CHN AP CAR,CHN
20	95380–05600	NUT TUERCA		4				AP CAR,CHN AP CAR,CHN
21	92990–05100	WASHER, SPRING ARANDELA PLANA		4				AP CAR,CHN AP CAR,CHN
22	92990–05600	WASHER, PLATE ARANDELA PLANA		4				AP CAR,CHN AP CAR,CHN
23	6K1–8258A–40	EXTENSION, WIRE HARNESS (8M) EXTENSION, ARNES DE CABLES (8M		1				AP CAR,CHN (10P) AP CAR,CHN (10P)
24	61B–8258A–01	EXTENSION, WIRE HARNESS (9.5M) EXTENSION, ARNES DE CABLES(9.5		1				AP CAR,CHN (10P) AP CAR,CHN (10P)

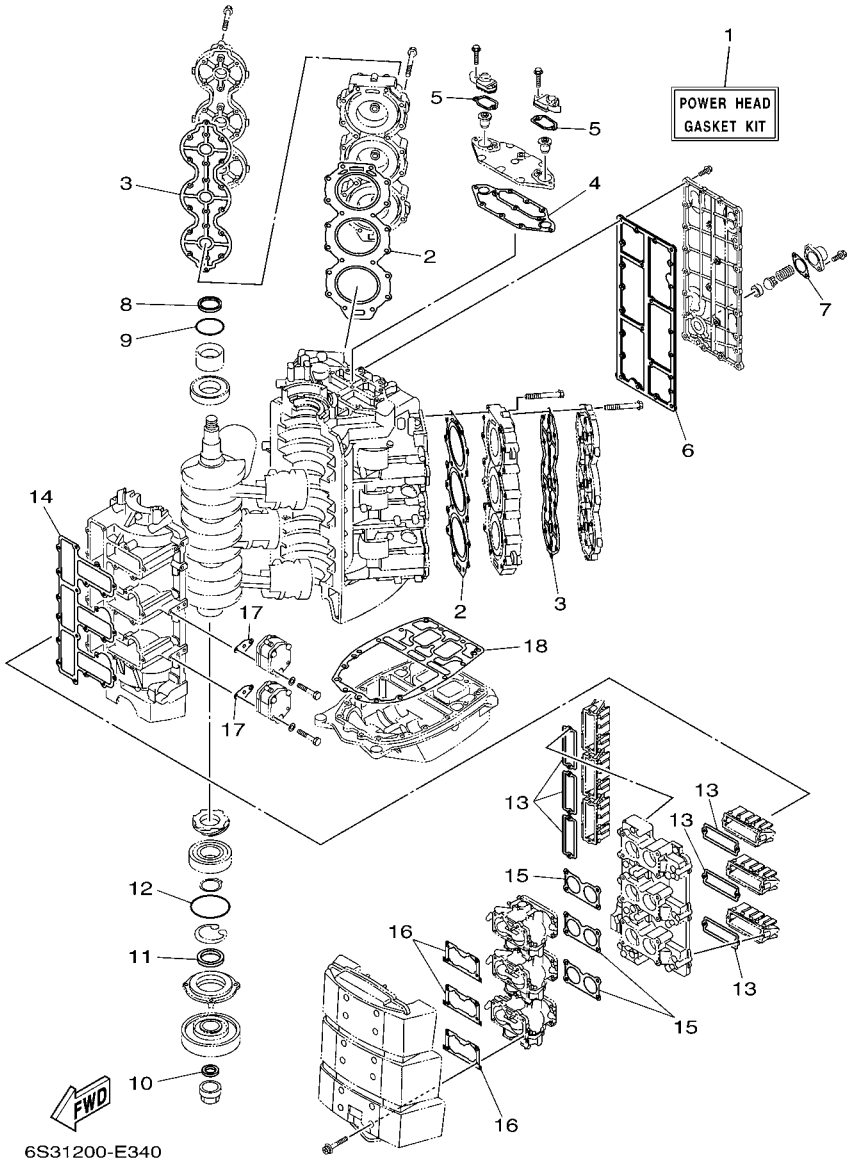

FIG. 35 REPAIR KIT 1 — ESTUCHE REPARATION 1

REF. NO.	PART NO. CODIGO Nº	DESCRIPTION DESCRIPCION	6S33	6S43				REMARKS OBSERVACIONES
1	6S3–W0001–00	POWER HEAD GASKET KIT JUEGO DE EMPAQUE DE MOTOR	1	1				
2	6S3–11181–00	.GASKET, CYLINDER HEAD 1 .JUNTA, DE CULATA 1	2	2				
3	6S3–11193–00	.GASKET, HEAD COVER 1 .EMPAQUE	2	2				
4	61A–11381–A0	.GASKET 1 .EMPAQUE 1	1	1				
5	61A–12414–A0	.GASKET, COVER .EMPAQUE	2	2				
6	6S3–41112–00	.GASKET, EXHAUST INNER COVER .EMPAQUE	1	1				
7	6G5–11382–A1	.GASKET 2 .EMPAQUE 2	1	1				
8	93102–40M38	.OIL SEAL .SELLO ACEITE	1	1				
9	93210–54M54	.O-RING .ANILLO O	1	1				
10	93104–22M07	.OIL SEAL .SELLO ACEITE	1	1				
11	93102–40004	.OIL SEAL .SELLO ACEITE	1	1				
12	93210–81MA6	.O-RING .ANILLO O	1	1				
13	61A–13621–A0	.GASKET, VALVE SEAT .JUNTA, DE VALV.DE EMPAQUE	6	6				
14	6S3–13645–00	.GASKET, MANIFOLD 1 .EMPAQUE	1	1				
15	6S3–14198–00	.GASKET .EMPAQUE	3	3				
16	6K7–14483–00	.GASKET .EMPAQUE	3	3				
17	650–24431–A0	.GASKET, FUEL PUMP 1 .EMPAQUE BOMBA COMBUST 1	2	2				
18	61A–45113–A0	.GASKET, UPPER CASING .EMPAQUE	1	1				

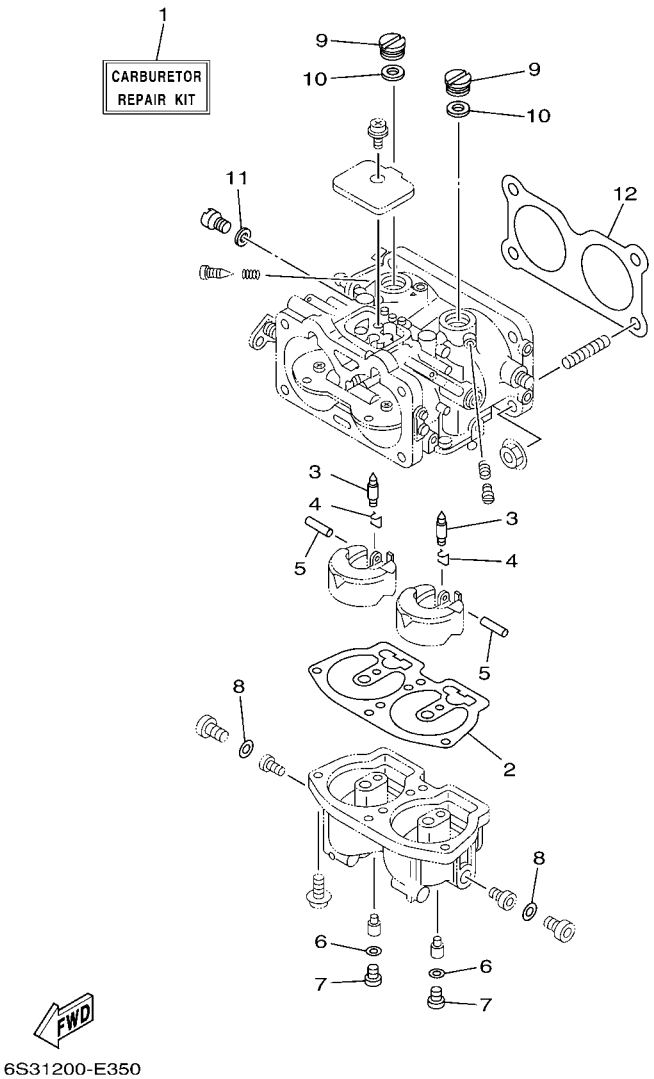

FIG. 36 REPAIR KIT 2 — ESTUCHE REPARATION 2

REF. NO.	PART NO. CODIGO Nº	DESCRIPTION DESCRIPCION	6S33	6S43				REMARKS OBSERVACIONES
1	6S3–W0093–00	CARBURETOR REPAIR KIT KIT REPARACION CARBURADOR	1	1				
2	64D–14384–01	.GASKET, FLOAT CHAMBER .EMPAQUE DE CAMARA DE BOIA	1	1				
3	6E5–14546–00	.VALVE, NEEDLE .VALVULA DE AGUJA	2	2				
4	6E5–14159–00	.CLIP .PRESILLA	2	2				
5	6E5–14386–02	.PIN, FLOAT .PASADOR DE BOIA	2	2				
6	61U–14959–00	.GASKET .EMPAQUE	2	2				
7	64D–14394–00	.VALVE, DRAIN .VALVULA DE DRENAJE	2	2				
8	6E5–14398–01	.GASKET .EMPAQUE	2	2				
9	6E5–14328–01	.PLUG .TORNILLO TOPE DE PILOTO	2	2				
10	6E5–14979–00	.GASKET .EMPAQUE DE ARRANQUE	2	2				
11	6J8–14959–00	.GASKET .EMPAQUE	1	1				
12	6S3–14198–00	.GASKET .EMPAQUE	1	1				

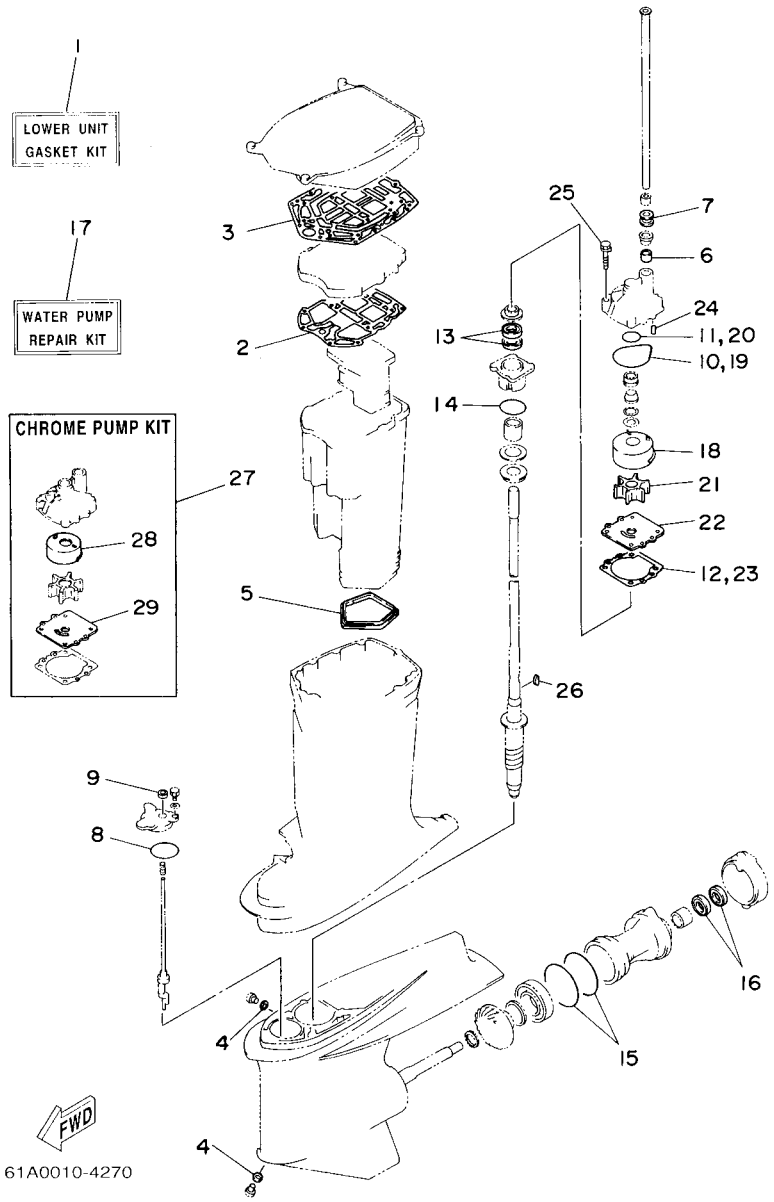

FIG. 37 REPAIR KIT 3 — ESTUCHE REPARATION 3

REF. NO.	PART NO. CODIGO Nº	DESCRIPTION DESCRIPCION	6S33	6S43				REMARKS OBSERVACIONES
1	65L–W0001–C0	LOWER UNIT GASKET KIT JUEGO DE JUNTA UNIDAD INFERIOR	1	1				
2	6D0–41134–00	.GASKET, EXHAUST MANIFOLD .EMPAQUE	1	1				
3	61A–45114–A0	.GASKET, UPPER CASING .EMPAQUE	1	1				
4	90430–08020	.GASKET .JUNTA	2	2				
5	61A–45123–01	.GASKET, MUFFLER .EMPAQUE SILENCIADOR	1	1				
6	6E5–44365–00	.DAMPER, WATER SEAL .HULE DE SELLO DE AGUA	1	1				
7	6E5–44366–00	.DAMPER, WATER SEAL .GOMA DEL SELLO DE AGUA	1	1				
8	93210–64488	.O-RING .ANILLO O	1	1				
9	93106–09014	.OIL SEAL .SELLO ACEITE	1	1				
10	93210–86M38	.O-RING .ANILLO O	1	1				
11	93210–37160	.O-RING .ANILLO O	1	1				
12	6E5–44315–A0	.GASKET, WATER PUMP .EMPAQUE	1	1				
13	93101–28M16	.OIL SEAL .SELLO ACEITE	2	2				
14	93210–55M14	.O-RING .ANILLO O	1	1				
15	93211–04384	.O-RING .ANILLO O	2	2				
16	93101–30M17	.OIL SEAL .SELLO ACEITE	2	2				
17	61A–W0078–A3	WATER PUMP REPAIR KIT ESTUCHE REPARACION BOMBA AGUA	1	1				
18	61A–44322–02	.INSERT, CARTRIDGE .CARTUCHO	1	1				
19	93210–86M38	.O-RING .ANILLO O	1	1				
20	93210–37160	.O-RING .ANILLO O	1	1				
21	6E5–44352–01	.IMPELLER .IMPULSOR	1	1				
22	6G5–44323–00	.OUTER PLATE, CARTRIDGE .PLACA EXTERIOR DEL CARTUCHO	1	1				
23	6E5–44315–A0	.GASKET, WATER PUMP .EMPAQUE	1	1				
24	93606–12019	.PIN, DOWEL .PASADOR DE CLAVIJA	2	2				
25	90119–08M14	.BOLT, WITH WASHER .TORNILLO CON ARANDELA	4	4				
26	90280–04M05	.KEY, WOODRUFF .CUNA WOODRUFF	1	1				
27	61A–W0078–2A	CHROME PUMP KIT ESTUCHE REPARACION BOMBA AGUA	1	1				

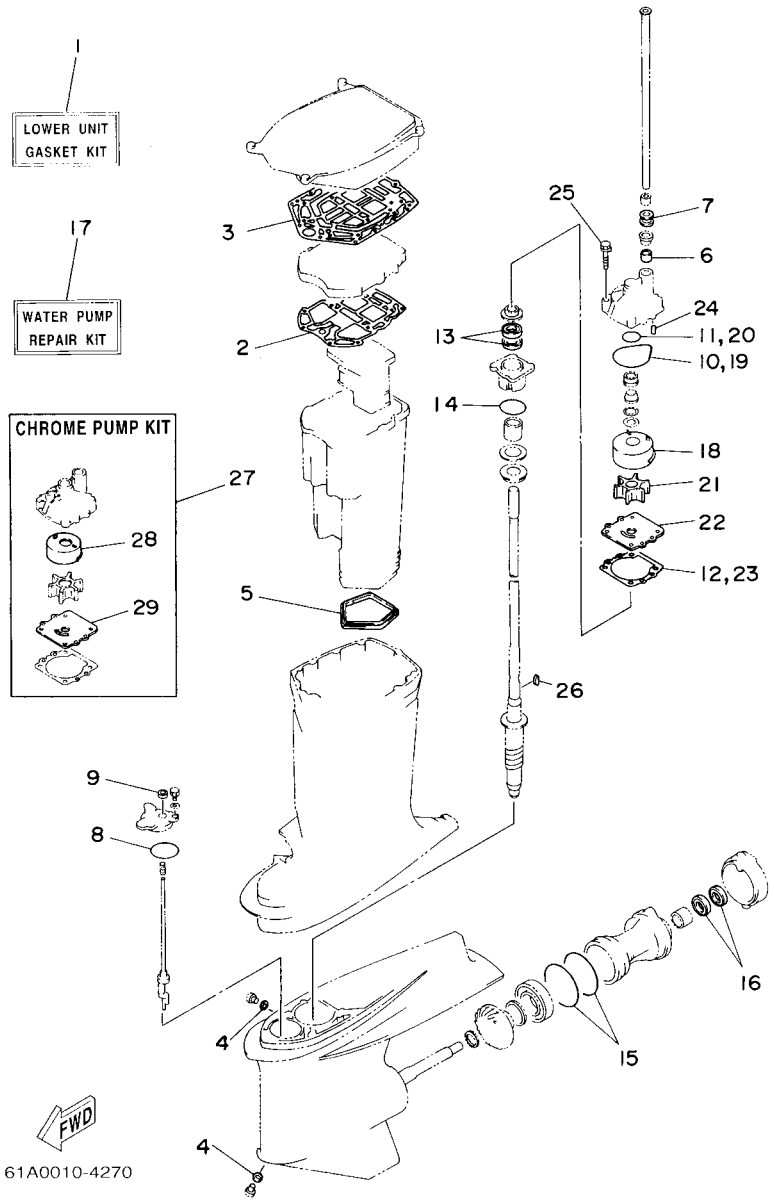

FIG. 37 REPAIR KIT 3 — ESTUCHE REPARATION 3

REF. NO.	PART NO. CODIGO Nº	DESCRIPTION DESCRIPCION	6S33	6S43				REMARKS OBSERVACIONES
28	6R3–44322–42	.INSERT, CARTRIDGE .CARTUCHO	1	1				
29	6G5–44323–40	.OUTER PLATE, CARTRIDGE .PLACA EXTERIOR DEL CARTUCHO	1	1				

NUMERICAL INDEX
INDICE NUMERICO

PART NO. CODIGO Nº	REF. NO.
6S3–11111–00–1S	4 – 1
6E5–11119–01	2 – 24
6S3–11181–00	4 – 2
	35 – 2
6S3–11191–00–1S	4 – 4
6S3–11193–00	4 – 5
	35 – 3
62Y–11325–00	2 – 16
66M–11327–00–94	2 – 18
66M–11328–00	2 – 17
61A–11371–00–1S	2 – 26
6H1–11372–00	22 – 17
6G5–11372–00–1S	4 – 17
6E5–11372–01	2 – 3
	5 – 10
61A–11381–A0	2 – 28
	35 – 4
6G5–11382–A1	4 – 16
	35 – 7
6D0–11411–00	3 – 1
61A–11447–00	3 – 2
663–11518–01	2 – 7
61A–11536–00	3 – 8
61A–11537–00	7 – 9
60V–11555–00	3 – 12
61A–11586–01	3 – 11
64D–11603–02	3 – 21
64D–11604–02	3 – 21
64D–11605–02	3 – 21
69L–11631–00–85	3 – 20
6D0–11633–00	3 – 24
61A–11634–00	3 – 25
69L–11635–00	3 – 20
69L–11636–00	3 – 20
69L–11642–00–85	3 – 22
69L–11645–00	3 – 22
69L–11646–00	3 – 22
6S3–11650–00	3 – 26
6E5–12411–30	2 – 30
688–12412–00	2 – 31
6S3–12413–21–1S	2 – 32
6S3–12413–31–1S	2 – 33
61A–12414–A0	2 – 34
	35 – 5
60H–12416–00	4 – 13
66M–12535–00	2 – 19
6R3–12572–00	17 – 54
61A–12576–00	4 – 19

PART NO. CODIGO Nº	REF. NO.
6R3–12580–00	17 – 55
6G5–12581–00	2 – 15
61A–13117–00	7 – 11
65L–13183–00	7 – 5
6S3–13183–00	5 – 15
6S3–13200–00	7 – 1
61A–13411–00	8 – 5
6E5–13414–00	8 – 6
6R3–13416–00	7 – 3
6E5–13437–62	8 – 43
6E5–13448–00	8 – 2
6E5–13552–01	5 – 9
69L–13610–00	5 – 1
61A–13621–A0	5 – 3
	35 – 13
6S3–13641–00–1S	5 – 8
6S3–13645–00	5 – 7
	35 – 14
6E5–14159–00	6 – 8
	36 – 4
6S3–14198–00	5 – 25
	35 – 15
	36 – 12
6E5–14223–00	6 – 29
6E5–14276–01	7 – 13
6S3–14301–00	6 – 1
6S3–14302–00	6 – 2
6S3–14303–00	6 – 3
6E5–14321–00	6 – 24
6E5–14323–03	6 – 28
6E5–14324–00	6 – 33
6A0–14325–00	9 – 40
6E5–14328–01	6 – 26
	36 – 9
6J8–14334–00	6 – 25
64D–14381–00	6 – 5
61A–14383–01	6 – 22
64D–14384–01	6 – 4
	36 – 2
6E5–14385–02	6 – 6
6E5–14386–02	6 – 9
	36 – 5
64D–14394–00	6 – 15
	36 – 7
6E5–14398–01	6 – 19
	36 – 8
6K7–14440–02	5 – 30
6K7–14483–00	5 – 32

PART NO. CODIGO Nº	REF. NO.
6K7–14483–00	35 – 16
68F–14485–00	9 – 23
6E5–14527–01	6 – 31
6E5–14546–00	6 – 7
	36 – 3
6K7–14573–00	15 – 10
66T–14584–00	6 – 23
61A–14711–30–5B	22 – 30
61A–14721–30–5B	22 – 35
6E5–14737–00	22 – 31
64D–1492E–79	6 – 16
64D–1492E–81	6 – 17
64D–1492E–82	6 – 18
64D–1492F–37	6 – 10
64D–1492F–39	6 – 11
64D–1492F–40	6 – 12
64D–1492F–42	6 – 13
61A–1492H–10	6 – 20
61A–1492H–12	6 – 21
61U–14959–00	6 – 14
	36 – 6
6J8–14959–00	6 – 34
	36 – 11
6E5–14979–00	6 – 27
	36 – 10
6S3–15100–01–1S	2 – 2
61A–15315–00	18 – 59
61A–15359–00–94	3 – 14
6A0–15789–00	20 – 25
6S3–15789–01	20 – 24
61A–21708–20	8 – 19
6E5–21733–20	8 – 20
6E5–21734–01–33	8 – 35
6E5–21746–00	8 – 37
61A–21750–00	8 – 1
6E5–21770–03	8 – 21
6E5–21798–01–33	8 – 36
6YJ–24167–00	27 – 7
6YJ–24201–10	27 – 1
646–24251–02	8 – 24
6Y1–24260–12	27 – 3
6Y1–24268–00	27 – 6
6Y2–24305–06	27 – 13
6Y2–24306–45	27 – 8
6Y2–24307–50	10 – 1
61A–24312–00	4 – 11
61A–24313–00	9 – 5
61A–24314–00	14 – 31

PART NO. CODIGO Nº	REF. NO.
6R5–24314–00	9 – 24
6E5–24315–00	9 – 28
6S3–24315–00	9 – 27
61A–24316–00	7 – 6
6S3–24316–00	9 – 48
6G5–24317–01	9 – 49
6K7–24318–00	9 – 51
6E5–24319–01	8 – 25
6E5–24321–01	8 – 29
6E5–24322–00	8 – 22
6E5–24323–00	8 – 15
6Y1–24329–00	27 – 5
6E5–24351–51	10 – 3
	27 – 10
6Y2–24360–60	10 – 5
	27 – 12
6G5–24376–00	9 – 52
6G5–24377–00	9 – 53
6R3–24377–00	9 – 3
650–24378–00	4 – 8
6E0–24378–00	5 – 14
6E5–24378–00	9 – 26
6E5–24379–00	8 – 12
6E5–24410–04	9 – 30
6E5–24411–01	9 – 35
6E5–24412–11	9 – 38
6E5–24413–01	9 – 32
6A0–24421–01	9 – 39
6E5–24423–00	9 – 37
648–24424–00	9 – 36
650–24431–A0	9 – 44
	35 – 17
6E5–24435–01	9 – 34
6E5–24444–01	9 – 31
6E5–24471–01	9 – 33
6E5–24486–00	9 – 43
6E5–24492–00	9 – 42
68F–24521–00	9 – 9
65L–24531–01	9 – 10
60H–24558–00	9 – 14
60H–24560–00	9 – 8
61A–24563–00	9 – 12
61A–24564–00	9 – 11
61A–24566–01	9 – 18
6YJ–24610–01	27 – 2
68F–24649–00	9 – 13
6A1–28176–00	17 – 59
61H–2819R–31	8 – 44

PART NO. CODIGO Nº	REF. NO.
6S3–41112–00	4 – 9
	35 – 6
61A–41113–00–1S	4 – 7
61A–41131–03–5B	22 – 23
61A–41132–20–5B	22 – 26
6D0–41134–00	22 – 27
	37 – 2
61A–41137–14–94	22 – 16
6K7–41211–00	18 – 12
6G5–41217–01	5 – 27
6S3–41230–00	18 – 15
6H1–41237–00	7 – 18
6H4–41237–00	18 – 14
6R5–41237–00	7 – 15
6S3–41241–00	7 – 16
6E5–41256–01	5 – 28
661–41262–02	5 – 29
6S3–41632–00	18 – 8
69J–42510–00–8D	20 – 5
61A–42510–31–8D	20 – 5
6S3–42610–00–8D	1 – 1
61A–42613–01–4D	1 – 11
61A–42615–01	1 – 10
61A–42626–00	1 – 14
61A–42636–00	1 – 15
6R3–42647–00	1 – 2
6S3–42651–00	1 – 6
6S3–42652–00	1 – 7
6R3–42662–00	1 – 5
61A–42681–30	1 – 21
61A–42682–30	1 – 22
6S3–42686–00	1 – 18
6S3–42687–00	1 – 19
6S3–42711–01–8D	17 – 1
61A–42716–00	17 – 39
61A–42717–00	17 – 40
61A–42724–00	18 – 60
61A–42725–12	17 – 24
6H4–42726–00	17 – 38
688–42726–10	17 – 37
61A–42727–00	17 – 41
61A–42738–02–5B	17 – 26
64D–42738–10–5B	17 – 27
61A–42741–01–8D	17 – 48
6S3–42744–00	18 – 20
6E5–42761–00–1S	2 – 36
61A–42771–01–8D	17 – 49
6G5–42791–10	17 – 58

PART NO. CODIGO Nº	REF. NO.
6S3–42812–00	17 – 8
61A–42815–10–8D	17 – 3
6S3–42816–00	17 – 6
6S3–42817–01–8D	17 – 12
6S3–42818–00	17 – 13
6S3–42819–00	17 – 14
69J–43111–01–8D	19 – 1
69J–43112–01–8D	19 – 14
6E5–43126–02	19 – 37
6R3–43131–00	19 – 18
61A–43132–00	19 – 12
61A–43133–00	19 – 15
6G5–43144–00	19 – 27
6S3–43144–00	17 – 19
6E5–43145–01	28 – 8
6G5–43148–00	19 – 32
61A–43181–01	19 – 29
6G5–43185–02	19 – 30
61A–43311–21–8D	19 – 24
61A–43311–31–8D	19 – 24
6G1–43318–01	17 – 47
61A–43376–00	20 – 3
61A–43800–25–4D	21 – 1
6T4–43802–03	21 – 52
61A–43804–01	21 – 85
61A–43805–01	21 – 86
61A–43806–00	21 – 82
61A–43807–00	21 – 77
61A–43810–00	21 – 3
61A–43813–01	21 – 12
6H1–43814–00	21 – 11
6H1–43816–00	21 – 51
6H1–43817–00	21 – 18
61A–43818–00	21 – 16
61A–43820–10	21 – 64
61A–43821–00	21 – 61
61A–43822–00	21 – 60
61A–43828–00	21 – 20
6H1–43829–00	21 – 57
61A–4382A–00	21 – 73
61A–4382K–00	21 – 44
6T4–43830–00	21 – 43
6H1–43831–00	21 – 42
61A–43833–01	21 – 15
61A–43835–01	21 – 14
61A–4383H–11	21 – 68
61A–43840–01	21 – 2
6T4–43841–00	21 – 55

NUMERICAL INDEX
INDICE NUMERICO

PART NO. CODIGO Nº	REF. NO.
6T4–43844–00	21 – 46
61A–43845–00	21 – 32
61A–43847–00	21 – 35
61A–43848–00	21 – 30
6T4–43849–00	21 – 39
6H1–4384F–00	21 – 41
6T4–4384G–00	21 – 47
61A–4384H–10	21 – 69
61A–4384J–00	21 – 26
61A–4384K–00	21 – 25
61A–4384L–00	21 – 22
6T4–43851–00	21 – 23
61A–43854–00	21 – 31
6T4–43855–00	21 – 48
6H1–43856–10	21 – 45
61A–4385H–00	21 – 40
61A–43861–00	21 – 4
6H1–43861–00	21 – 7
61A–43864–00	21 – 66
6H1–43866–00	21 – 53
6H1–43867–00	21 – 54
6H1–43869–00	21 – 21
6T4–4386J–00	21 – 75
61A–4386K–00	21 – 83
61A–43871–00	21 – 5
6H1–43872–00	21 – 8
61A–43874–00	21 – 65
61A–43875–00	21 – 29
6H1–43875–00	21 – 33
6T4–43875–01	21 – 59
61A–43875–10	21 – 67
61A–43876–00	21 – 70
6T4–43876–00	21 – 36
61A–43878–00	21 – 58
61A–43880–02	21 – 74
61A–43881–01	21 – 89
61A–43881–11	21 – 90
61A–43884–01	21 – 79
6T4–43885–00	21 – 78
61A–43887–00	21 – 87
61A–43891–00	21 – 84
6T4–43893–00	21 – 71
6T4–43895–00	21 – 49
61A–4389H–00	21 – 9
61A–44112–00	18 – 51
61A–44116–00	18 – 45
61A–44117–01–1S	18 – 19
61A–44118–00–8D	18 – 43

PART NO. CODIGO Nº	REF. NO.
61A–44120–23	18 – 49
61A–44120–33	18 – 49
61A–44121–00	18 – 37
6E5–44122–00	18 – 38
61A–44138–00	18 – 61
60V–44150–00	23 – 16
60W–44150–00	25 – 16
61A–44176–00–1S	18 – 26
688–44194–00	18 – 23
61A–44311–01	23 – 19
	25 – 19
6E5–44312–00	23 – 24
	25 – 24
6E5–44315–A0	23 – 28
	25 – 28
	37 – 12
61A–44322–02	37 – 18
6R3–44322–42	23 – 20
	25 – 20
	37 – 28
6G5–44323–00	37 – 22
6G5–44323–40	23 – 27
	25 – 27
	37 – 29
6E5–44352–01	23 – 25
	25 – 25
	37 – 21
61A–44361–20	24 – 2
	26 – 2
61A–44361–30	24 – 2
	26 – 2
6E5–44365–00	23 – 23
	24 – 3
	25 – 23
	26 – 3
	37 – 6
663–44366–00	23 – 7
	25 – 7
6E5–44366–00	24 – 1
	26 – 1
	37 – 7
6E5–44391–00	17 – 23
61A–44511–00–94	20 – 33
60V–44514–00–94	20 – 26
6G5–44526–00	19 – 3
68F–44533–00	2 – 38
61A–44551–01–8D	20 – 10
61A–44552–01–94	20 – 21

PART NO. CODIGO Nº	REF. NO.
61A–44553–02–8D	20 – 23
60V–44555–00–94	20 – 13
61A–44575–00	20 – 12
61A–45111–22–8D	22 – 1
61A–45111–32–8D	22 – 1
61A–45113–A0	22 – 19
	35 – 18
61A–45114–A0	22 – 15
	37 – 3
61A–45123–01	22 – 33
	37 – 5
61A–45155–00	22 – 2
61A–45214–10	24 – 10
	26 – 10
61A–45215–10	24 – 11
	26 – 11
6G5–45251–02	19 – 2
6S3–45300–20–8D	23 – 1
6S4–45300–20–8D	25 – 1
6S3–45300–30–8D	23 – 1
6S4–45300–30–8D	25 – 1
6S3–45301–00–8D	23 – 2
	25 – 2
6E5–45318–00	22 – 13
61A–45321–01	23 – 12
	25 – 12
61A–45331–00–94	23 – 31
	25 – 31
69J–45332–00–94	23 – 57
61B–45332–01–94	25 – 59
688–45341–10	23 – 9
	25 – 9
6E5–45344–00	23 – 37
	25 – 37
61A–45361–01–5B	23 – 68
	25 – 73
61A–45371–00	24 – 14
	26 – 14
61A–45375–00	24 – 9
	26 – 9
61A–45376–00–94	23 – 11
	25 – 11
61A–45378–00	22 – 7
61B–45383–00	25 – 66
61B–45384–00	25 – 65
61A–45501–20	23 – 40
	25 – 40
61A–45501–30	23 – 40

PART NO. CODIGO Nº	REF. NO.
61A–45501–30	25 – 40
61B–45538–01	25 – 4
61A–45551–03	23 – 41
	25 – 41
6S3–45560–00	23 – 44
61B–45560–01	25 – 44
61A–45567–00	23 – 6
	25 – 78
61A–45567–10	23 – 6
	25 – 78
61A–45567–20	23 – 6
	25 – 78
61A–45567–30	23 – 6
	25 – 78
61A–45567–40	23 – 6
	25 – 78
61A–45567–50	23 – 6
	25 – 78
61A–45567–60	23 – 6
	25 – 78
61B–45570–03	25 – 61
61A–45571–00	23 – 59
61A–45577–00	23 – 61
	25 – 76
61A–45577–10	23 – 61
	25 – 76
61A–45577–20	23 – 61
	25 – 76
61A–45577–30	23 – 61
	25 – 76
61A–45577–40	23 – 61
	25 – 76
61A–45577–50	23 – 61
	25 – 76
61A–45577–60	23 – 61
	25 – 76
6K1–45578–01	25 – 77
6K1–45578–10	25 – 77
6K1–45578–20	25 – 77
6K1–45578–30	25 – 77
6K1–45578–40	25 – 77
6K1–45578–50	25 – 77
6K1–45578–60	25 – 77
61A–45587–00	23 – 34
	25 – 34
61A–45587–10	23 – 34
	25 – 34
61A–45587–20	23 – 34

PART NO. CODIGO Nº	REF. NO.
61A–45587–20	25 – 34
61A–45587–30	23 – 34
	25 – 34
61A–45587–40	23 – 34
	25 – 34
61A–45587–50	23 – 34
	25 – 34
61A–45587–60	23 – 34
	25 – 34
69J–45611–00	23 – 45
61B–45611–01	25 – 45
61B–45611–20	25 – 47
61A–45631–03	23 – 49
	25 – 51
61A–45632–00	23 – 48
	25 – 50
61A–45633–00	23 – 50
	25 – 52
61A–45634–01	23 – 47
	25 – 49
61A–45635–00	23 – 52
	25 – 54
61B–45641–01	25 – 48
61A–45641–02	23 – 46
6H1–45668–00	23 – 51
	25 – 53
6K1–45970–01–98	26 – 21
6G5–45970–02–98	24 – 21
6R1–45970–A1	26 – 21
6R4–45970–A1	24 – 21
61A–45972–00–98	24 – 21
61B–45972–00–98	26 – 21
6K1–45972–01–98	26 – 21
6G5–45972–02–98	24 – 21
6R1–45972–A0	26 – 21
6R4–45972–A0	24 – 21
61A–45974–00–98	24 – 21
61B–45974–00–98	26 – 21
6K1–45974–02–98	26 – 21
6G5–45974–03–98	24 – 21
6R1–45974–A0	26 – 21
6R4–45974–A0	24 – 21
6R1–45976–A0	26 – 21
6R4–45976–A0	24 – 21
61A–45978–00–98	24 – 21
61B–45978–00–98	26 – 21
6K1–45978–02–98	26 – 21
6G5–45978–03–98	24 – 21

PART NO. CODIGO Nº	REF. NO.
6R1–45978–A0	26 – 21
6R4–45978–A0	24 – 21
6E5–45987–01	24 – 16
	26 – 16
688–45997–01	24 – 17
	26 – 17
704–48119–41	32 – 68
EL8–48127–00	32 – 23
704–48128–00	32 – 2
704–48144–20	32 – 50
703–48152–00	31 – 57
703–48153–00	31 – 3
704–48153–00	32 – 55
704–48156–00	32 – 63
EL8–48164–00	32 – 41
704–48166–00	32 – 56
704–48167–11	32 – 69
704–48176–10	32 – 51
704–48178–00	32 – 66
703–48189–00	31 – 17
EL8–48191–00	32 – 16
704–48192–00	32 – 44
704–48192–P0	32 – 52
703–48198–00	31 – 14
703–48205–17	30 – 1
	31 – 1
704–48207–P1	30 – 2
	32 – 1
703–48211–01	31 – 61
703–48212–00	31 – 58
703–48213–00	31 – 59
703–48215–00	31 – 43
704–48215–30	32 – 12
703–48219–00	31 – 30
704–48219–P0	32 – 49
703–48221–00	31 – 56
704–48221–P0	32 – 67
703–48222–00	31 – 27
704–48222–P0	32 – 32
703–48223–00	31 – 28
703–48225–00	31 – 29
6X3–48225–20	32 – 43
703–48226–00	31 – 26
703–48227–00	31 – 24
704–48229–P1	32 – 35
704–48229–R0	32 – 60
704–48231–00	32 – 25
703–48232–00	31 – 62

NUMERICAL INDEX
INDICE NUMERICO

PART NO. CODIGO Nº	REF. NO.
704–48232–P1	32 – 40
704–48233–00	32 – 53
703–48234–00	31 – 18
704–48234–00	32 – 48
703–48235–00	31 – 4
704–48235–00	32 – 54
703–48236–00	31 – 16
703–48238–00	31 – 22
704–48238–00	32 – 39
EL8–48241–00	32 – 26
704–48242–10	32 – 42
703–48243–00	31 – 15
703–48244–00	31 – 21
EL8–48244–00	32 – 30
703–48245–00	31 – 11
EL8–48245–00	32 – 31
701–48246–00	32 – 5
703–48246–00	31 – 23
701–48248–00	31 – 13
	32 – 38
EL8–48251–00	32 – 3
703–48252–00	31 – 12
EL8–48254–00	32 – 27
EL8–48259–00	32 – 7
704–48261–00	32 – 15
703–48261–01	31 – 2
704–48262–00	32 – 8
703–48264–00	31 – 6
704–48264–00	32 – 9
703–48265–00	31 – 9
704–48265–00	32 – 4
703–48268–00	31 – 5
703–48271–00	31 – 60
704–48271–00	32 – 22
EL8–48279–00	32 – 47
703–48281–00	31 – 31
704–48281–00	32 – 13
EL8–48281–00	32 – 11
703–48282–00	31 – 32
704–48283–00	32 – 17
703–48284–00	31 – 52
704–48284–P0	32 – 57
704–48285–10	32 – 65
701–48287–00	31 – 42
704–48287–00	32 – 20
703–48291–10	31 – 39
703–48293–10	31 – 41
701–48320–80	30 – 3

PART NO. CODIGO Nº	REF. NO.
6E5–48344–00	18 – 6
703–48345–01	31 – 19
	32 – 19
701–48350–50	30 – 3
703–48358–00	31 – 20
	32 – 24
61A–48531–00	18 – 1
6E5–48538–00	18 – 2
6S3–49511–00	17 – 18
6E5–61301–01	29 – 1
6E5–61303–00	29 – 5
6E5–61311–11	29 – 3
6E5–61313–00	29 – 2
6E5–61315–00	29 – 4
6E5–61350–02	28 – 1
6E5–61351–01	28 – 2
6E5–61355–00	28 – 5
6S3–81332–00	11 – 17
61A–81337–01	11 – 20
6S3–81800–00	16 – 1
6N7–81801–00	16 – 8
69W–81807–00	16 – 11
61A–81809–00	16 – 3
6N7–81810–00	16 – 5
6N7–81813–00	16 – 9
6S3–81820–00	16 – 10
61A–81822–00–94	16 – 19
61A–81824–00	16 – 4
6K7–81826–10	16 – 14
6E5–8182A–10	16 – 17
6E5–8182E–10	16 – 15
6E5–8182F–10	16 – 16
6S3–8182G–00	16 – 6
6E5–8182K–10	16 – 18
6N7–81830–00	16 – 13
6N7–81840–00	16 – 7
6N7–81850–10	16 – 2
6N7–81857–00	16 – 12
6E5–81900–01	8 – 27
61A–81919–00	14 – 37
61A–81919–41	14 – 34
6E5–81922–00	8 – 28
61A–81941–00	14 – 15
61A–81942–00	14 – 33
6S3–81942–00	15 – 25
6S3–81948–00	15 – 18
61A–81948–01	14 – 1
61A–81949–00	14 – 13

PART NO. CODIGO Nº	REF. NO.
61A–81949–10	14 – 12
61A–81950–00	14 – 8
704–81950–10	32 – 58
61A–81952–00	14 – 16
61A–81960–02	14 – 23
69J–81972–01–1S	14 – 25
69J–81975–A0	14 – 24
6K1–81980–00	34 – 18
61A–82105–00	13 – 12
61A–82117–00	14 – 39
6Y5–82117–00	33 – 18
6G5–82119–00	14 – 14
61A–82147–20	19 – 26
61A–82147–30	19 – 26
6E5–82148–00	19 – 9
6H1–82148–00	19 – 6
6E5–82149–00	20 – 16
61A–82150–01	14 – 20
1E6–82151–00	33 – 17
61A–82151–00	14 – 21
663–82151–00	13 – 9
61A–82153–00	14 – 22
61A–82154–01	14 – 36
61A–82171–00	14 – 18
61A–82176–00	14 – 38
6A0–82317–00	8 – 8
	14 – 3
	15 – 19
663–82317–01	11 – 21
6E3–82370–21	13 – 4
6K1–82510–06	34 – 3
703–82510–43	31 – 44
6G0–82519–00	12 – 17
6R3–82521–70	33 – 19
6R3–82521–80	33 – 19
61A–82531–00	13 – 5
703–82531–00	31 – 46
6K1–82532–00	34 – 5
703–82540–00	31 – 50
704–82540–30	32 – 10
6R3–82553–30	33 – 21
6R3–82553–70	33 – 20
6R3–82553–80	33 – 20
682–82556–00	31 – 48
	34 – 7
688–82560–10	15 – 7
61A–82563–00	13 – 13
703–82563–02	31 – 55

PART NO. CODIGO Nº	REF. NO.
704–82563–51	32 – 34
704–82563–H1	32 – 61
704–82563–J1	32 – 64
6K1–82570–08	34 – 1
6K1–82571–02	34 – 2
6K1–82575–00	34 – 6
688–82575–01	31 – 47
703–82577–00	31 – 45
	34 – 4
6E3–8257H–00	17 – 60
6E5–82587–00	13 – 14
6E5–82588–00	17 – 44
61A–82588–01	18 – 34
61B–8258A–01	34 – 24
688–8258A–20	31 – 49
6K1–8258A–40	34 – 23
6S3–82590–00	13 – 8
704–82590–10	32 – 59
703–82591–00	31 – 53
703–82592–00	31 – 54
688–82594–00	13 – 19
	17 – 42
6E5–82594–00	17 – 43
703–82594–00	31 – 25
704–82594–00	32 – 33
6R3–8259E–00	8 – 11
61A–8259F–00	18 – 33
703–83383–02	31 – 51
688–83383–11	34 – 12
6Y5–83500–S5	33 – 6
6Y5–83504–20	15 – 22
6Y5–8350T–03	33 – 1
6Y5–83533–T2	33 – 10
6Y5–83553–00	33 – 16
6Y5–83553–M0	33 – 16
6Y5–83557–00	33 – 22
6Y5–83557–31	33 – 12
6E5–83558–00	22 – 11
6Y5–8355X–T1	33 – 11
6Y5–83570–S5	33 – 7
61A–83614–00	13 – 15
6S3–83614–00	13 – 16
6K1–83614–01	34 – 8
6A1–83625–41	11 – 22
6A1–83625–51	11 – 23
69J–83672–00	20 – 1
61A–83721–00	11 – 4
6Y5–83728–00	33 – 13

PART NO. CODIGO Nº	REF. NO.
65L–85510–10	11 – 2
60V–85516–00	15 – 13
61A–85525–00	12 – 9
61A–85537–00	12 – 15
6S3–85540–00	12 – 5
61A–85542–01–94	12 – 1
61A–85548–00	12 – 8
61A–85550–01	11 – 1
61A–85570–00	13 – 1
61A–85580–01	11 – 3
6E5–85711–60	8 – 42
6E5–85720–05	8 – 33
6R3–85721–80	8 – 34
61A–85730–01	8 – 4
61A–85790–00	15 – 1
6K1–85830–01	34 – 13
61A–85885–00	15 – 8
6K7–85886–01	15 – 11
61A–85895–00	15 – 3
64E–86110–01	15 – 27
6Y5–87122–S0	33 – 15
61A–87149–00	14 – 7
6S3–8A870–00	11 – 15
6S3–W0001–00	35 – 1
65L–W0001–C0	37 – 1
69L–W0004–00	5 – 2
61A–W0070–30	1 – 20
61A–W0078–2A	37 – 27
61A–W0078–A3	37 – 17
6S3–W0090–01–1S	2 – 1
6S3–W0093–00	36 – 1
656–W2810–02	8 – 45
90101–09M70	29 – 9
90101–12M05	19 – 41
90101–14002	20 – 17
90101–14003	20 – 30
90105–08036	23 – 65
	25 – 70
90105–10M00	24 – 15
	26 – 15
90105–10M62	2 – 12
90105–10M75	2 – 13
90109–06M40	7 – 2
90109–09001	3 – 27
90116–06M15	5 – 6
90116–06M30	5 – 11
90119–06025	5 – 24
90119–06089	2 – 14

PART NO. CODIGO Nº	REF. NO.
90119–06M09	17 – 17
90119–06M10	23 – 15
	25 – 15
90119–06M17	18 – 18
	22 – 8
90119–06M28	12 – 4
90119–06M65	8 – 10
	14 – 4
	15 – 21
90119–06MA2	2 – 29
	4 – 18
	11 – 16
90119–06MA3	4 – 6
90119–06MA5	2 – 35
90119–08032	17 – 7
90119–08062	18 – 9
90119–08077	22 – 20
90119–08078	22 – 6
90119–08M14	23 – 30
	25 – 30
	37 – 25
90119–08M22	17 – 36
90119–08M57	16 – 22
90119–08M74	22 – 34
90119–08M76	16 – 20
90119–08M77	16 – 21
90119–08MA3	2 – 25
90119–08MA8	4 – 3
90119–10024	19 – 23
	20 – 22
90119–10MA2	24 – 8
	26 – 8
90149–05M05	34 – 19
90152–05003	24 – 12
	26 – 12
90157–05107	21 – 76
90157–05M19	27 – 4
90157–06M11	18 – 21
90159–05M12	18 – 24
90159–05M25	15 – 9
90159–06M03	12 – 16
90159–06M08	5 – 33
90169–05M00	14 – 35
	15 – 23
	17 – 2
90170–09M05	29 – 10
90170–14M06	29 – 6
90170–16M19	23 – 43

NUMERICAL INDEX
INDICE NUMERICO

PART NO. CODIGO Nº	REF. NO.
90170–16M19	25 – 43
90170–24M22	11 – 12
90171–18M04	24 – 19
	26 – 19
90179–06M24	1 – 13
90179–06M28	5 – 26
90183–02M03	23 – 54
	25 – 56
90183–05M02	22 – 32
90185–05002	24 – 13
	26 – 13
90185–09M01	28 – 6
	29 – 11
90185–14M00	20 – 31
90185–22M11	19 – 21
90201–02M00	23 – 53
	25 – 55
90201–05660	15 – 17
90201–06068	9 – 17
90201–08023	23 – 66
	25 – 71
90201–08M54	17 – 34
90201–09M01	7 – 10
90201–09M02	18 – 58
90201–10M20	28 – 7
90201–10M76	29 – 8
90201–12M05	19 – 43
90201–13M01	19 – 42
90201–15M58	20 – 18
90201–16015	20 – 27
90201–16016	20 – 15
90201–16M00	23 – 42
	25 – 42
90201–25M02	11 – 13
90201–26013	3 – 29
90201–26M59	19 – 20
90201–28M01	20 – 29
90201–29M01	25 – 46
90201–31M00	23 – 60
90201–40M00	20 – 6
90202–05088	7 – 20
90202–06007	18 – 42
90202–08M20	18 – 39
90202–28M46	20 – 28
90202–32M19	20 – 14
90202–40M47	20 – 9
90206–10036	18 – 17
90206–12M00	18 – 10

PART NO. CODIGO Nº	REF. NO.
90206–13M10	17 – 5
90206–14086	21 – 80
90249–06M19	19 – 33
90280–04M05	23 – 26
	25 – 26
	37 – 26
90280–05015	11 – 11
90340–08002	23 – 8
	25 – 8
90340–14M00	2 – 8
90383–16M01	2 – 5
90384–06M07	2 – 4
90385–04M05	1 – 12
90386–10M16	19 – 31
90386–12069	18 – 28
90386–13M38	17 – 15
90386–13M88	17 – 4
90386–18M14	19 – 39
	21 – 17
90386–18M63	19 – 38
90386–25M31	19 – 19
90386–39M89	20 – 7
90386–90M90	18 – 56
90387–05M00	15 – 12
90387–06119	8 – 9
	14 – 2
	15 – 20
90387–06M03	12 – 3
90387–06M29	18 – 16
90387–08664	18 – 11
90387–08M09	18 – 29
90387–08M37	17 – 33
90387–10M02	19 – 34
90387–10M61	28 – 3
90430–08020	23 – 10
	25 – 10
	37 – 4
90430–14115	2 – 9
90445–05002	8 – 7
90445–07023	5 – 12
90445–07024	5 – 13
90445–07M10	2 – 11
90445–07M21	22 – 10
90445–07M45	5 – 16
90445–07M59	5 – 17
90445–07MA5	5 – 31
90445–07MF0	22 – 10
90445–11M26	8 – 31

PART NO. CODIGO Nº	REF. NO.
90445–11M36	17 – 56
90445–12M04	8 – 13
90445–13M01	10 – 2
	27 – 9
90445–13M17	9 – 2
90445–13M35	27 – 11
90446–09001	7 – 7
90446–14M88	12 – 24
90446–15M07	9 – 50
90450–10M07	10 – 6
90462–08019	2 – 39
90462–08047	14 – 28
90462–08051	5 – 19
90462–08052	5 – 22
90462–08053	12 – 20
90464–07M20	5 – 20
90464–12182	5 – 21
90464–13M34	8 – 18
	9 – 4
90464–18003	13 – 11
90464–20181	13 – 20
	15 – 24
90465–06M86	2 – 27
	16 – 27
90465–06M88	5 – 23
	15 – 5
90465–08021	5 – 18
	12 – 23
90465–08M63	14 – 9
90465–08M89	13 – 10
90465–11M10	7 – 4
	8 – 14
	9 – 1
	11 – 14
	12 – 25
	17 – 57
	19 – 22
	22 – 12
	33 – 14
90465–13M11	8 – 3
90465–13M18	4 – 20
90465–13M30	17 – 25
90467–08M18	4 – 12
	14 – 32
90468–05M03	7 – 19
90468–18008	18 – 7
90480–06M19	10 – 4
90480–09M12	12 – 2

PART NO. CODIGO Nº	REF. NO.
90480–20M05	4 – 15
90480–22M81	17 – 32
90501–10M77	23 – 55
	25 – 57
90501–11M10	23 – 18
	25 – 18
90501–16M11	4 – 14
90506–16003	19 – 36
90506–18009	17 – 20
90506–18M40	17 – 9
90508–20M31	18 – 32
90560–12M01	28 – 4
91490–20012	18 – 57
91490–40030	24 – 20
	26 – 20
91609–10014	21 – 62
91690–30012	18 – 3
91690–30016	7 – 14
91690–30020	19 – 35
92780–06020	32 – 28
92903–06100	11 – 6
	18 – 53
92903–06600	2 – 23
	11 – 7
	12 – 7
	13 – 3
	14 – 6
	18 – 54
92990–04100	33 – 4
92990–04600	1 – 16
92990–05100	34 – 10
92990–05300	32 – 36
92990–05600	5 – 5
	34 – 22
92990–06100	1 – 3
	34 – 16
92990–06300	32 – 46
92990–06600	8 – 39
	34 – 17
92990–08600	31 – 34
92990–10600	15 – 2
92990–18200	24 – 18
	26 – 18
92995–04100	18 – 36
92995–05100	11 – 9
	15 – 15
92995–05600	2 – 21
	11 – 10

PART NO. CODIGO Nº	REF. NO.
92995–05600	15 – 16
92995–06100	3 – 19
	9 – 16
	12 – 11
	18 – 47
92995–06600	1 – 9
	9 – 20
	11 – 19
	12 – 12
	13 – 7
	15 – 29
	16 – 26
	17 – 11
	18 – 48
	19 – 5
	22 – 4
92995–08100	18 – 5
92995–08200	18 – 31
92995–08600	16 – 24
	22 – 22
	23 – 39
	25 – 39
92995–10100	24 – 6
	26 – 6
92995–10600	24 – 7
	26 – 7
92995–14600	20 – 20
93101–28M16	23 – 32
	25 – 32
	37 – 13
93101–30M17	23 – 63
	25 – 68
	37 – 16
93102–08414	21 – 92
93102–40004	3 – 15
	35 – 11
93102–40M38	3 – 4
	35 – 8
93104–22M07	3 – 13
	35 – 10
93106–09014	23 – 14
	25 – 14
	37 – 9
93106–19N50	21 – 6
93210–03261	15 – 30
93210–06001	21 – 38
93210–064A5	21 – 27
93210–07003	21 – 37

PART NO. CODIGO Nº	REF. NO.
93210–08287	27 – 14
93210–09165	18 – 50
	21 – 56
93210–10M74	21 – 50
93210–16275	28 – 9
93210–18397	21 – 34
93210–18MA9	7 – 12
93210–35321	20 – 8
93210–37160	23 – 22
	25 – 22
	37 – 11
93210–54M54	3 – 5
	35 – 9
93210–55M14	23 – 36
	25 – 36
	37 – 14
93210–64488	23 – 13
	25 – 13
	37 – 8
93210–72789	21 – 88
93210–81MA6	3 – 17
	35 – 12
93210–86M38	23 – 21
	25 – 21
	37 – 10
93211–04384	23 – 64
	25 – 69
	37 – 15
93300–60820	21 – 81
93306–209U1	3 – 6
93306–210U0	23 – 58
93306–308U0	3 – 9
93310–32668	3 – 28
93310–84106	3 – 30
93310–959U0	3 – 7
93311–83280	23 – 3
	25 – 3
93311–940V0	3 – 3
93315–43061	23 – 62
	25 – 62
93315–440V6	25 – 64
93315–660W3	25 – 5
93317–330U2	23 – 33
	25 – 33
93332–000W2	25 – 60
93340–67011	23 – 5
93341–440U5	25 – 63
93341–670V0	25 – 6

NUMERICAL INDEX
INDICE NUMERICO

PART NO. CODIGO Nº	REF. NO.
93341–930U9	23 – 35
	25 – 35
93390–00030	23 – 4
93410–18M02	19 – 40
93410–37M04	20 – 11
93410–40M03	3 – 10
93420–36M01	22 – 14
93420–61M07	3 – 16
93430–06024	31 – 10
	32 – 6
93501–04011	23 – 56
	25 – 58
93501–08001	21 – 72
93505–32038	21 – 28
93606–12019	22 – 9
	23 – 29
	25 – 29
	37 – 24
93608–12063	2 – 10
93608–12M05	22 – 5
	24 – 4
	26 – 4
93700–06M01	18 – 27
93700–06M03	18 – 44
	19 – 17
93700–09M00	23 – 67
	25 – 72
94702–00247	4 – 21
95313–08600	18 – 55
95380–03600	9 – 41
95380–04600	33 – 5
95380–05600	7 – 17
	18 – 13
	31 – 7
	32 – 21
	34 – 11
95380–06600	1 – 4
	8 – 40
	18 – 22
	31 – 40
	32 – 37
	34 – 15
95380–12600	19 – 44
95380–14700	29 – 7
95380–14800	20 – 19
95780–10300	20 – 4
97013–06012	18 – 52
97013–06014	12 – 13

PART NO. CODIGO Nº	REF. NO.
97013–06014	14 – 5
97013–06020	2 – 22
	13 – 2
97013–06025	12 – 6
	14 – 26
97013–06030	14 – 10
97013–06035	11 – 5
97075–08035	17 – 35
97080–06100	8 – 38
97095–05012	2 – 20
97095–06010	19 – 7
	22 – 3
97095–06012	1 – 8
	12 – 18
	13 – 6
	16 – 25
	17 – 30
97095–06014	9 – 19
	12 – 21
97095–06016	9 – 15
	12 – 10
	13 – 17
	15 – 28
	17 – 10
97095–06020	3 – 18
	17 – 45
	18 – 25
97095–06025	19 – 4
97095–06030	17 – 50
	18 – 46
97095–06035	22 – 36
97095–08016	16 – 23
97095–08020	18 – 4
	23 – 69
	25 – 74
97095–08025	23 – 38
	25 – 38
97095–08035	18 – 30
	22 – 21
97095–08050	22 – 28
97095–10045	24 – 5
	26 – 5
97380–05025	31 – 8
97380–06018	32 – 18
97380–08030	31 – 33
97595–06420	21 – 13
97595–06512	2 – 40
	15 – 6

PART NO. CODIGO Nº	REF. NO.
97595–06550	9 – 45
97602–04230	21 – 19
97602–05210	21 – 24
97780–40520	1 – 17
97780–50612	14 – 17
97880–05016	5 – 4
97885–04016	18 – 35
97885–05012	15 – 4
97885–05025	15 – 14
97885–05030	11 – 8
97885–06008	18 – 62
97885–06010	11 – 18
	19 – 13
97885–06012	19 – 10
97885–06016	20 – 2
97890–05016	32 – 70
97890–05025	32 – 14
97890–06018	32 – 45
97980–05108	6 – 32
97980–05116	6 – 30
98580–03015	31 – 38
98580–04006	31 – 36
98580–04010	31 – 35
98580–05010	31 – 37
98780–05018	32 – 29
98980–05010	34 – 9
98980–06020	34 – 14
99001–08600	23 – 17
	25 – 17
9E450–04433	33 – 2
9E450–04533	33 – 3

PART NO. CODIGO Nº	REF. NO.

PART NO. CODIGO Nº	REF. NO.

PART NO. CODIGO Nº	REF. NO.