YAMAHA

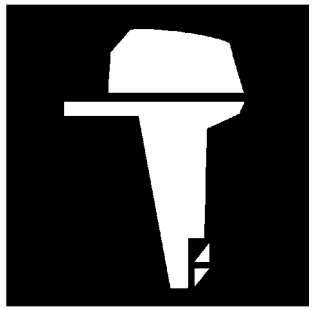

PARTS CATALOGUE
CATALOGO DE REPUESTOS

E115A'04 (61U3)
E115A TUNA'04 (61U3)

1C61U-200S1

(2C61U-200S1)

YAMAHA
GENUINE
Parts & Accessories

FOREWORD

This Parts Catalogue is related to the parts for the model(s) on the cover page. When you are ordering replacement parts, please refer to this Parts Catalogue and quote both part numbers and part names correctly.

1. Modifications or additions which have been made after the issue of the Parts Catalogue will be announced in the Parts News.
   It is advisable that you make the necessary corrections to the Parts Catalogue according to the Parts News.

2. Abbreviations
   The following abbreviations are used in this Parts Catalogue.

   "UR" Use specified parts number.
   "UN" Use as many as needed.
   "AP" Alternate Parts
   "LM" Locally Made (Parts need to be ordered locally)
   "F#" Frame No. (Applicable machine No.)
   "O/S" Over Size

3. The number of components for assembly
   - Parts, which are to be supplied in an assembly, are listed with a dot (.) in front of the part name as shown below.
   - The numeral appearing to the right of each component part indicates the quantity of parts for each assembly unit.

PART NO.	DESCRIPTION	Q'TY	REMARKS
2F5–83310–60	FRONT FLASHER LIGHT ASSY	2	
115–83311–60	.BULB (6V–18W)	1	

4. Applicable colours of graphics are represented in the "REMARKS" as shown below.

PART NO.	DESCRIPTION	Q'TY	REMARKS
2N4–24110–00–X5	FUEL TANK COMP.	2	MXR
3J1–24240–10	.GRAPHIC, FUEL TANK	1	FOR MXR

5. Note that the illustrations for reference in finding parts numbers are not to be used for assembling. When assembling, please use the applicable service manual.

6. The asterisk (*) before a reference number indicates modified items after the first edition.

7. Applicable Serial No.

   Engine Serial No.

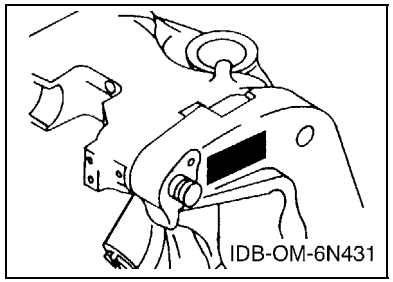

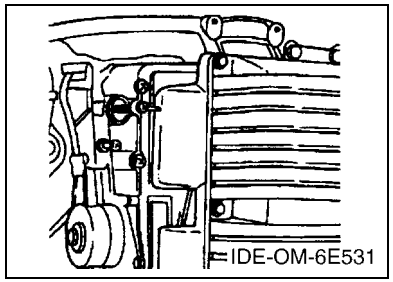

8. Applicable Engine Starting Serial No.

Model	Serial No.	Model	Serial No.
E115A	6E5-1005727		

9. Applicable Colour Code

Abbreviation	Colour Name	Colour Code
DBNM2	DARK BLUISH GRAY METALLIC 2	004D

10. Quantity Column Information

Column No.	Name Of Q'ty Column	Applicable Model
1	ET	E115AET
2	E	E115AE
3	WH	E115AWH
4	MH	E115AMH

PROLOGO

Este catálogo de repuestos corresponde a las piezas para el o los modelos que figuran en la página de portada. Al formular el pedido de repuestos, se ruega citar este catálogo y especificar correctamente el número y el nombre de las piezas.

1. Las modificaciones y agregados que se hayan realizado después de la edición de este Catálogo de Repuestos, serán anunciados en las Informaciones de Recambios.
   Es recomendable que se hagan las correcciones necesarias en el Catálogo de Repuestos de acuerdo con las Informaciones de Recambios.

2. Abreviaciones
   En este. Catálogo de Repuestos se emplean las siguientes abreviaciones.

   "UR" Usar el número de partes especificado
   "UN" Usar la cantidad necesaria
   "AP" Piezas sustitutivas
   "LM" Fabricación local (Hay que pedir los repuestos en las cercanías)
   "F#" Nº de bastidor (Nº aplicable a la máquina)
   "O/S" Sobredimensionado

3. La cantidad de componentes para el montaje
   - Los componentes, suministrados como conjunto, se describen con un punto (.) que precede al nombre del parte como se indica a continuación.
   - La numeración que aparece a la derecha de cada descripción indica la cantidad de partes por cada unidad de conjunto.

CODIGO Nº	DESCRIPCION	CANT.	OBSERVACIONES
2F5–83310–60	ENSAMBLAJE DE LA LUZ	2	
115–83311–60	.BOMBILLA (6V–18W)	1	

4. Los colores de los componentes se indican como sigue en la columna de "OBSERVACIONES".

CODIGO Nº	DESCRIPCION	CANT.	OBSERVACIONES
2N4–24110–00–X5	COMP. DEL TANQUE	2	MXR
3J1–24240–10	.GRAFICO, DEL TANQUE	1	PARA MXR

5. Debe tenerse en cuenta que las ilustraciones sirven como guia para la búsqueda de los números de partes y no deben usarse para el montaje. Durante el montaje, se recomienda usar el manual de taller correspondiente.

6. EL asterisco (*) antes del número de referencia indica los elementos modificados después de la primera edición.

7. Números de serie

   Nº de Serie del motor

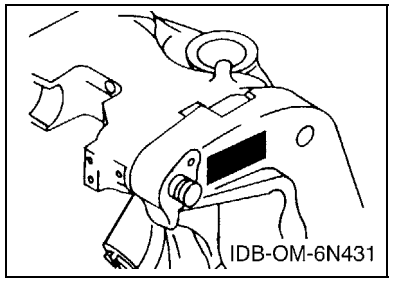

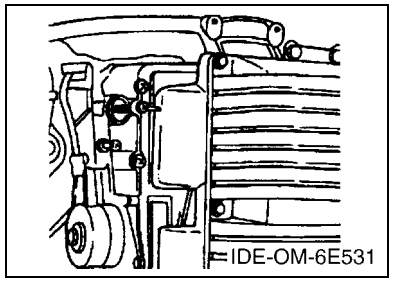

8. Números de serie del motor

Modelo	Nº de serie	Modelo	Nº de serie
E115A	6E5-1005727		

9. Códigos de color aplicables

Abreviatura	Nombre de color	Código de color
DBNM2	DARK BLUISH GRAY METALLIC 2	004D

10. Informacion para la columna de cantidades

Columna Nº	Nombre de la columna de cantidades	Modelo aplicable
1	ET	E115AET
2	E	E115AE
3	WH	E115AWH
4	MH	E115AMH

CONTENTS

SHEET1/2
TOP COWLING 1 ..... A4
TOP COWLING 2 ..... A5
CYLINDER & CRANKCASE 1 ..... A6
CRANKSHAFT & PISTON B1
CYLINDER & CRANKCASE 2 ..... B3
INTAKE 1 ..... B4
INTAKE 2 ..... B6
CARBURETOR 1 ..... C1
CARBURETOR 2 ..... C3
FUEL 1 ..... C5
FUEL 2 ..... C7
FUEL 3 ..... D2
STARTER D3
GENERATOR D6
ELECTRICAL 1 ..... D7
ELECTRICAL 2 ..... E1
ELECTRICAL 3 ..... E3
ELECTRICAL 4 ..... E4
STARTING MOTOR E5
BOTTOM COWLING E6
STEERING F1
CONTROL F4
BRACKET 1 ..... F7

INDEX

NUMERICAL INDEX G1

SHEET2/2
BRACKET 1 ..... A4*
BRACKET 2 ..... A5*
BRACKET 3 ..... A7*
BRACKET 4 ..... B2*
BRACKET 5 ..... B4*
POWER TRIM & TILT ASSY 1 ..... B7*
POWER TRIM & TILT ASSY 2 ..... C2*
UPPER CASING C4*
LOWER CASING & DRIVE 1 ..... C6*
LOWER CASING & DRIVE 2 ..... D3*
FUEL TANK D5*
STEERING GUIDE D6*
REMOTE CONTROL BOX D7*
REMOTE CONTROL ASSY E1*
METER E4*
REPAIR KIT 1 ..... E5*
REPAIR KIT 2 ..... E7*

INDEX

NUMERICAL INDEX G1*

CONTENIDO

PAGINA1/2
SOPORTE SUPERIOR 1 ..... A4
SOPORTE SUPERIOR 2 ..... A5
CILINDRO & CARTER 1 ..... A6
CIGUENAL & PISTON B1
CILINDRO & CARTER 2 ..... B3
ADMISION 1 ..... B4
ADMISION 2 ..... B6
CARBURADOR 1 ..... C1
CARBURADOR 2 ..... C3
COMBUSTIBLE 1 ..... C5
COMBUSTIBLE 2 ..... C7
COMBUSTIBLE 3 ..... D2
ARRANQUE D3
GENERADOR D6
EQUIPO ELECTRICO 1 ..... D7
EQUIPO ELECTRICO 2 ..... E1
EQUIPO ELECTRICO 3 ..... E3
EQUIPO ELECTRICO 4 ..... E4
MOTOR DE ARRANQUE E5
CUBIERTA INFERIOR E6
DIRECCION F1
CONTROL F4
SOPORTE 1 ..... F7

INDICE

INDICE NUMERICO G1

PAGINA2/2
SOPORTE 1 ..... A4*
SOPORTE 2 ..... A5*
SOPORTE 3 ..... A7*
SOPORTE 4 ..... B2*
SOPORTE 5 ..... B4*
COMPONER Y PODER VARILLA 1 ..... B7*
COMPONER Y PODER VARILLA 2 ..... C2*
FUNDA SUPERIOR C4*
IMPULSOR E INFERIOR 1 ..... C6*
IMPULSOR E INFERIOR 2 ..... D3*
DEPOSITO DE COMBUSTIBLE D5*
DIRECCIONGUIAR D6*
CONTROL REMOTO COMPLETO D7*
CONTROL REMOTO COMPL E1*
MEDIDOR E4*
ESTUCHE REPARATION 1 ..... E5*
ESTUCHE REPARATION 2 ..... E7*

INDICE

INDICE NUMERICO G1*

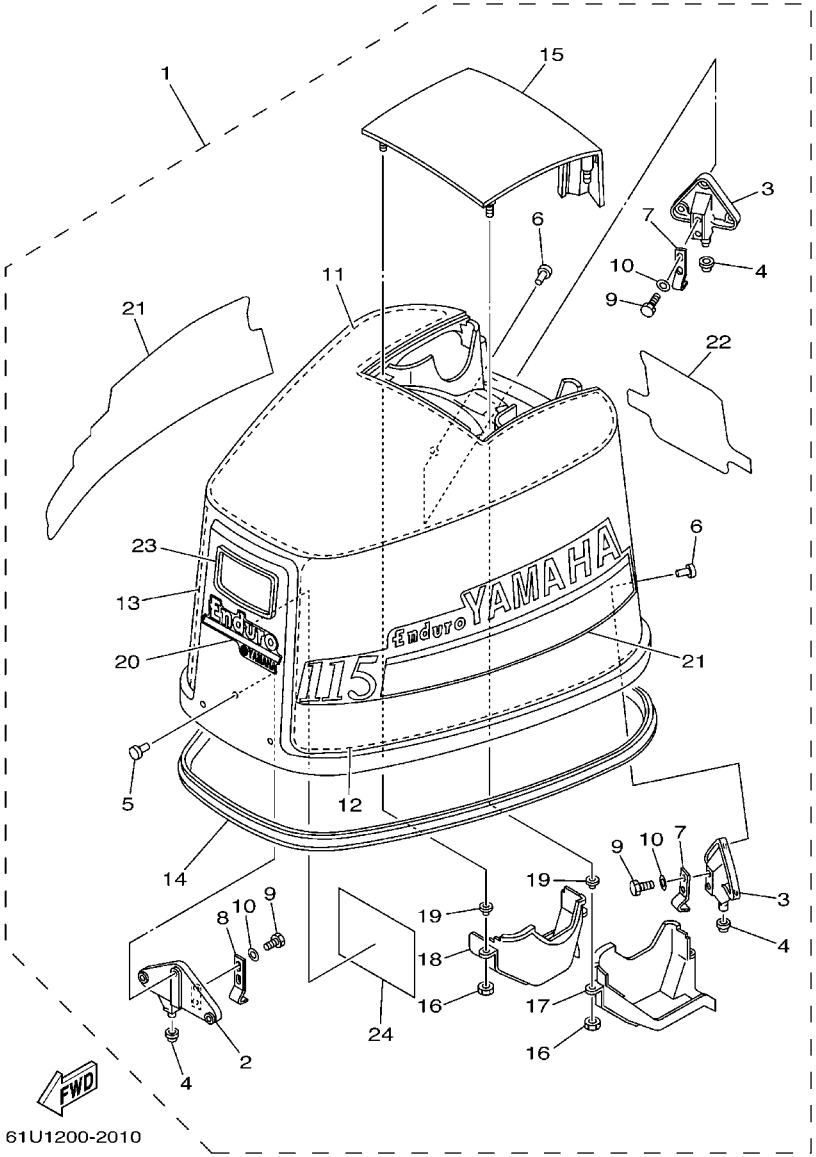

FIG. 1 TOP COWLING 1 — SOPORTE SUPERIOR 1

REF. NO.	PART NO. CODIGO Nº	DESCRIPTION DESCRIPCION	ET	E	WH	MH		REMARKS OBSERVACIONES
1	61U–42610–L0–4D	TOP COWLING ASSY SOPORTE SUPERIOR COMPL.			1	1		
2	6E5–42647–00–94	.HOLDER, CLAMP BAND .MORDAZA DE ABRAZADERA			1	1		
3	6E5–42649–01–94	.HOLDER, CLAMP BAND .MORDAZA DE ABRAZADERA			2	2		
4	663–42662–00	.DAMPER .AMORTIGUADOR			3	3		
5	90266–06009	.RIVET .REMACHE			3	3		
6	90266–06M02	.RIVET .REMACHE			6	6		
7	6E5–42652–00	.HOOK .GANCHO			2	2		
8	688–42652–00	.HOOK .GANCHO			1	1		
9	97095–06016	.BOLT .PERNO			6	6		
10	92995–06600	.WASHER .ARANDELA			6	6		
11	6E5–42617–00	.DAMPER, FORM .HULE DE FORMA			1	1		
12	61U–42619–10	.DAMPER, FORM .HULE DE FORMA			1	1		
13	61U–42627–10	.DAMPER, FORM .AMORTIGUADOR FORMA 3			1	1		
14	6E5–42615–00	.SEAL .SELLO			1	1		
15	6G5–42613–00–4D	.MOLDING, AIR DUCT .MOLDURA CONDUCTO AIRE			1	1		
16	90179–06M24	.NUT .TUERCA			4	4		
17	61U–42626–00	.LOUVER, 1 .AMORTIGUADOR 1			1	1		
18	61U–42636–00	.LOUVER 2 .REJILLA 2			1	1		
19	90387–06M35	.COLLAR .COLLAR			4	4		
20	61U–42677–J0	.GRAPHIC, FRONT .CALCAMONIA FRONTAL			1	1		
21	61U–W0070–H0	.GRAPHIC SET .JUEGO DE EMBLEMA			1	1		
22	61U–42678–H0	.GRAPHIC, REAR .CALCAMONIA TRASERA			1	1		
23	697–15761–01	.SEAL, RUBBER 1 .SELLO DE GOMA 1			1	1		
24	677–13437–0B	.MARK, CAUTION .MARKER			1	1		

FIG. 2 TOP COWLING 2 — SOPORTE SUPERIOR 2

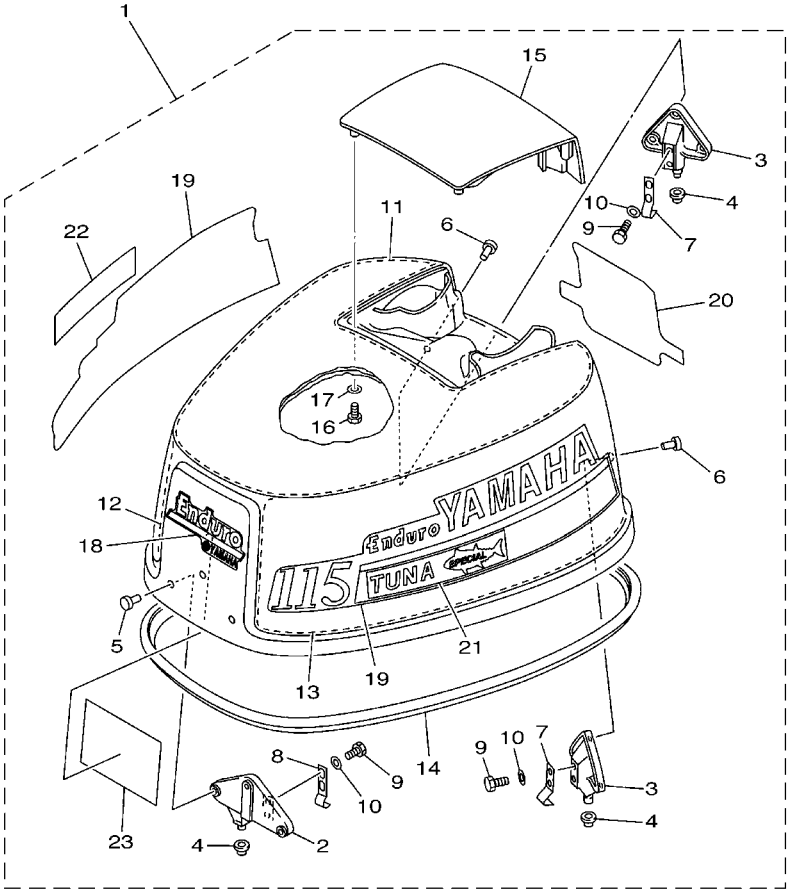

61U1200-2020

REF. NO.	PART NO. CODIGO Nº	DESCRIPTION DESCRIPCION	ET	E	WH	MH		REMARKS OBSERVACIONES
1	61U–42610–K0–4D	TOP COWLING ASSY SOPORTE SUPERIOR COMPL.	1	1				
	61U–42610–U0–4D	TOP COWLING ASSY SOPORTE SUPERIOR COMPL.	1	1				FOR TUNA FOR TUNA
2	6E5–42647–00–94	.HOLDER, CLAMP BAND .MORDAZA DE ABRAZADERA	1	1				
3	6E5–42649–01–94	.HOLDER, CLAMP BAND .MORDAZA DE ABRAZADERA	2	2				
4	663–42662–00	.DAMPER .AMORTIGUADOR	3	3				
5	90266–06009	.RIVET .REMACHE	3	3				
6	90266–06M02	.RIVET .REMACHE	6	6				
7	6E5–42652–00	.HOOK .GANCHO	2	2				
8	688–42652–00	.HOOK .GANCHO	1	1				
9	97095–06016	.BOLT .PERNO	6	6				
10	92995–06600	.WASHER .ARANDELA	6	6				
11	6E5–42617–00	.DAMPER, FORM .HULE DE FORMA	1	1				
12	6E5–42619–00	.DAMPER, FORM .HULE DE FORMA	1	1				
13	6E5–42627–00	.DAMPER, FORM .AMORTIGUADOR FORMA 3	1	1				
14	6E5–42615–00	.SEAL .SELLO	1	1				
15	6E5–42613–01–4D	.MOLDING, AIR DUCT .MOLDURA CONDUCTO AIRE	1	1				
16	97095–06016	.BOLT .PERNO	4	4				
17	92995–06600	.WASHER .ARANDELA	4	4				
18	61U–42677–J0	.GRAPHIC, FRONT .CALCAMONIA FRONTAL	1	1				
19	61U–W0070–H0	.GRAPHIC SET .JUEGO DE EMBLEMA	1	1				
20	61U–42678–H0	.GRAPHIC, REAR .CALCAMONIA TRASERA	1	1				
21	688–42681–61	.MARK, COWLING .MARCA DE CUBIERTA	1	1				FOR TUNA FOR TUNA
22	688–42682–61	.MARK, COWLING .MARCA DE CUBIERTA	1	1				FOR TUNA FOR TUNA
23	677–13437–0B	.MARK, CAUTION .MARKER	1	1				

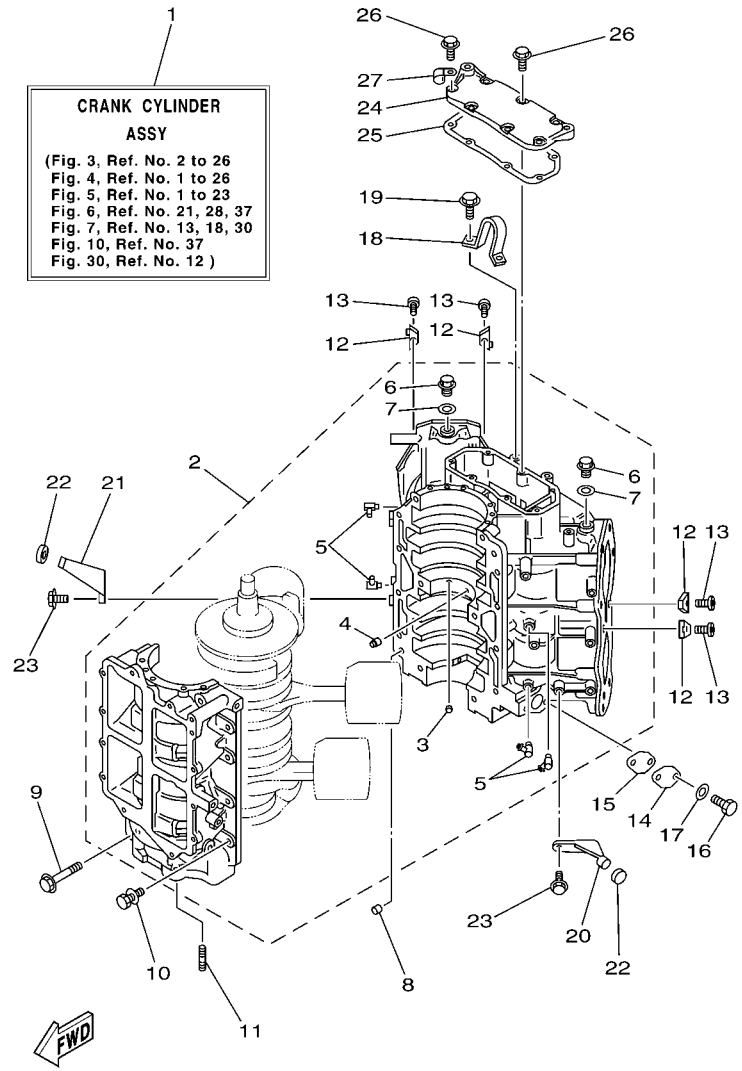

FIG. 3 CYLINDER & CRANKCASE 1 CILINDRO & CARTER 1

REF. NO.	PART NO. CODIGO Nº	DESCRIPTION DESCRIPCION	ET	E	WH	MH		REMARKS OBSERVACIONES
1	61U–W0090–04–1S	CRANK CYLINDER ASSY BLOQUE MOTOR COMPLETO	1	1	1	1		
2	61U–15100–00–1S	CRANKCASE ASSY CARTER COMPLETO	1	1	1	1		
3	624–11379–00	.VALVE, CHECK .VALVULA DE CONTROL	1	1	1	1		
4	663–11518–01	.LOCK, BEARING .SEGURO BALERO	1	1	1	1		
5	6E5–11372–01	.NIPPLE, HOSE .NIPLE DE MANGUERA	4	4	4	4		
6	90340–14M00	.PLUG, STRAIGHT SCREW .TORNILLO, DE DRENAJE	2	2	2	2		
7	90430–14115	.GASKET .JUNTA	2	2	2	2		
8	93608–12063	PIN, DOWEL PASADOR DE CLAVIJA	2	2	2	2		
9	90105–10M20	BOLT, FLANGE TORNILLO	6	6	6	6		
10	90119–08M94	BOLT, WITH WASHER TORNILLO CON ARANDELA	8	8	8	8		
11	90116–08M45	BOLT, STUD ESPARRAGO	2	2	2	2		
12	6E5–11325–00	ANODE ANODO	4	4	4	4		
13	98780–04015	SCREW, FLAT HEAD TORNILLO CABEZA PLANA	4	4	4	4		
14	6R3–1131M–01	COVER CUBIERTA	1	1	1	1		
15	6R3–11397–01	GASKET EMPAQUE	1	1	1	1		
16	97013–06016	BOLT PERNO	2	2	2	2		
17	92903–06600	WASHER, PLATE RONDANA SENCILLA	2	2	2	2		
18	6E5–11119–01	HANGER, ENGINE SOPORTE DEL MOTOR	1	1				
	61U–11119–01	HANGER, ENGINE SOPORTE DEL MOTOR			1	1		
19	90119–08MA3	BOLT, WITH WASHER TORNILLO CON ARANDELA	2	2	2	2		
20	6E5–42761–00–1S	STOPPER RETEN 1	1	1	1	1		
21	6E5–42762–00–1S	STOPPER RETEN 2	1	1	1	1		
22	68F–44533–00	DAMPER, UPPER MOUNT RUBBER AMORTIGUADOR SUPERIOR	2	2	2	2		
23	90119–06MA2	BOLT, WITH WASHER TORNILLO CON ARANDELA	4	4	4	4		
24	6E5–11371–00–1S	COVER CUBIERTA 1	1	1	1	1		
25	6E5–11381–A2	GASKET 1 EMPAQUE 1	1	1	1	1		
26	90119–06MA2	BOLT, WITH WASHER TORNILLO CON ARANDELA	7	7	7	7		

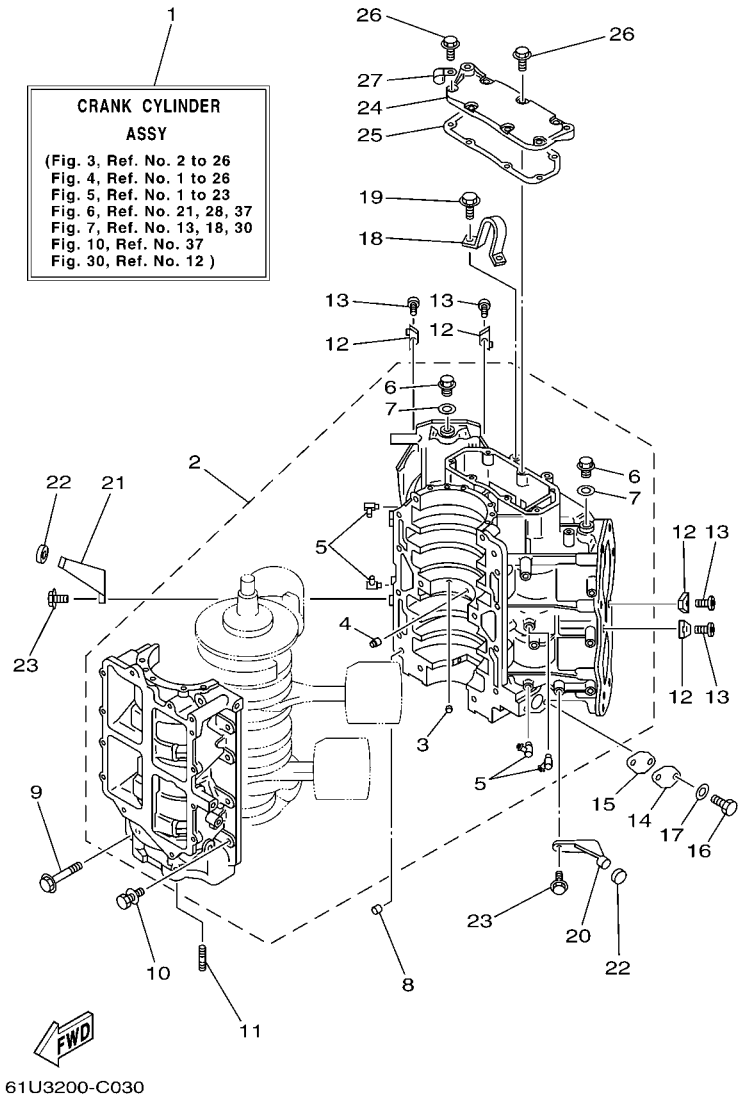

FIG. 3 CYLINDER & CRANKCASE 1 CILINDRO & CARTER 1

REF. NO.	PART NO. CODIGO Nº	DESCRIPTION DESCRIPCION	ET	E	WH	MH		REMARKS OBSERVACIONES
27	90465–06M86	CLAMP BRIDA	1	1	1	1		

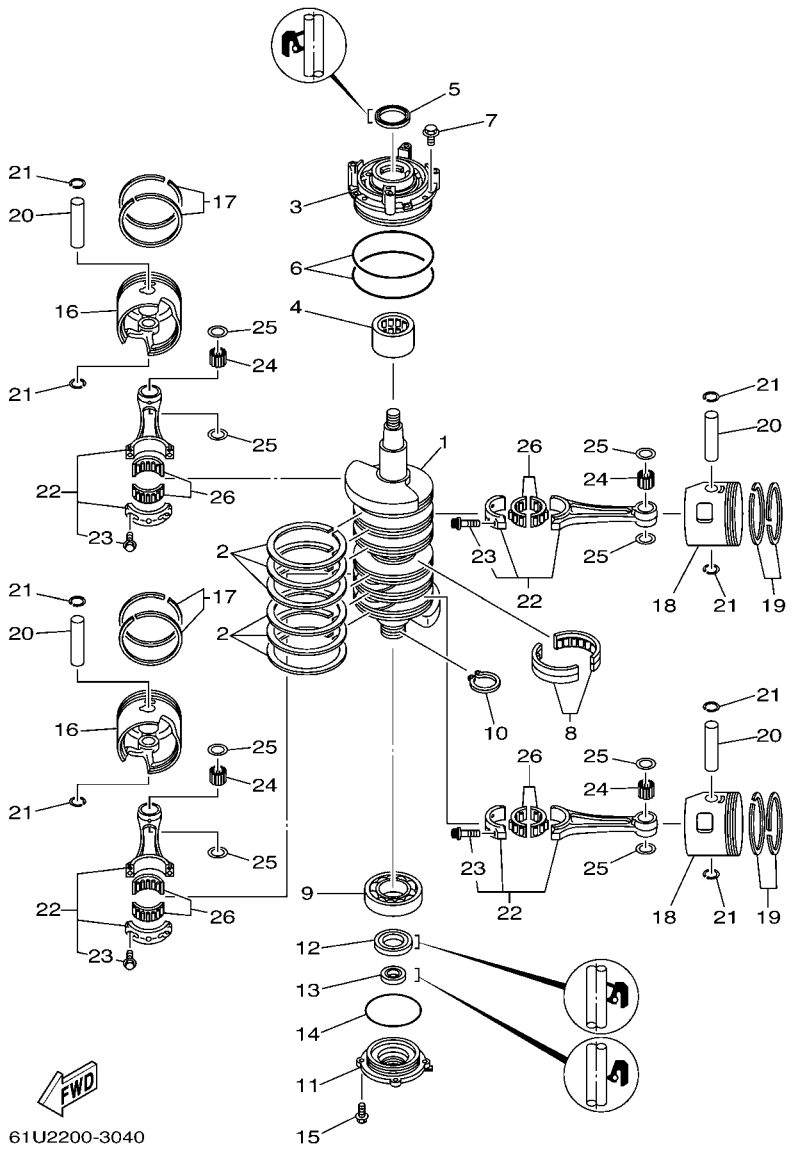

FIG. 4 CRANKSHAFT & PISTON — CIGUENAL & PISTON

REF. NO.	PART NO. CODIGO Nº	DESCRIPTION DESCRIPCION	ET	E	WH	MH		REMARKS OBSERVACIONES
1	6N7–11411–01	CRANKSHAFT CIGUENAL	1	1	1	1		
2	6E5–11447–00	SEAL, CRANK SELLO MANIVELA	6	6	6	6		
3	6E5–15163–00–1S	HOUSING, BEARING 1 CAJA DE COJINETE 1	1	1	1	1		
4	93311–940U3	BEARING COJINETE DE RODILLOS	1	1	1	1		
5	93102–40M14	OIL SEAL SELLO ACEITE	1	1	1	1		
6	93211–04001	O-RING ANILLO O	2	2	2	2		
7	90119–06MA2	BOLT, WITH WASHER TORNILLO CON ARANDELA	4	4	4	4		
8	93310–954U1	BEARING COJINETE DE RODILLOS	1	1	1	1		
9	93306–208U0	BEARING COJINETE	1	1	1	1		
10	93410–40M03	CIRCLIP SEGURO	1	1	1	1		
11	6G5–15359–00–94	HOUSING, OIL SEAL CAJA DE SELLO DE ACEITE	1	1	1	1		
12	93102–35M13	OIL SEAL SELLO ACEITE	1	1	1	1		
13	93101–22M15	OIL SEAL SELLO ACEITE	1	1	1	1		
14	93210–74M35	O-RING ANILLO O	1	1	1	1		
15	90119–06MA2	BOLT, WITH WASHER TORNILLO CON ARANDELA	4	4	4	4		
16	6R5–11631–01–93	PISTON (STD) PISTON (NORMA)	2	2	2	2		
	6R5–11635–01	PISTON (0.25MM O/S) PISTON (0.25MM O/S)	2	2	2	2		AP AP
	6R5–11636–01	PISTON (0.50MM O/S) PISTON (0.50MM O/S)	2	2	2	2		AP AP
17	61U–11601–00	PISTON RING SET (STD) JUEGO DE AROS (NORMA)	2	2	2	2		
	61U–11601–10	PISTON RING SET (0.25MM O/S) JUEGO DE AROS (0.25MM O/S)	2	2	2	2		AP AP
	61U–11601–20	PISTON RING SET (0.50MM O/S) JUEGO DE AROS (0.50MM O/S)	2	2	2	2		AP AP
18	6R5–11642–01–93	PISTON 2 (STD) PISTON 2 (NORMA)	2	2	2	2		
	6R5–11645–01	PISTON 2 (0.25MM O/S) PISTON 2 (0.25MM O/S)	2	2	2	2		AP AP
	6R5–11646–01	PISTON 2 (0.50MM O/S) PISTON 2 (0.50MM O/S)	2	2	2	2		AP AP
19	61U–11601–00	PISTON RING SET (STD) JUEGO DE AROS (NORMA)	2	2	2	2		
	61U–11601–10	PISTON RING SET (0.25MM O/S) JUEGO DE AROS (0.25MM O/S)	2	2	2	2		AP AP
	61U–11601–20	PISTON RING SET (0.50MM O/S) JUEGO DE AROS (0.50MM O/S)	2	2	2	2		AP AP

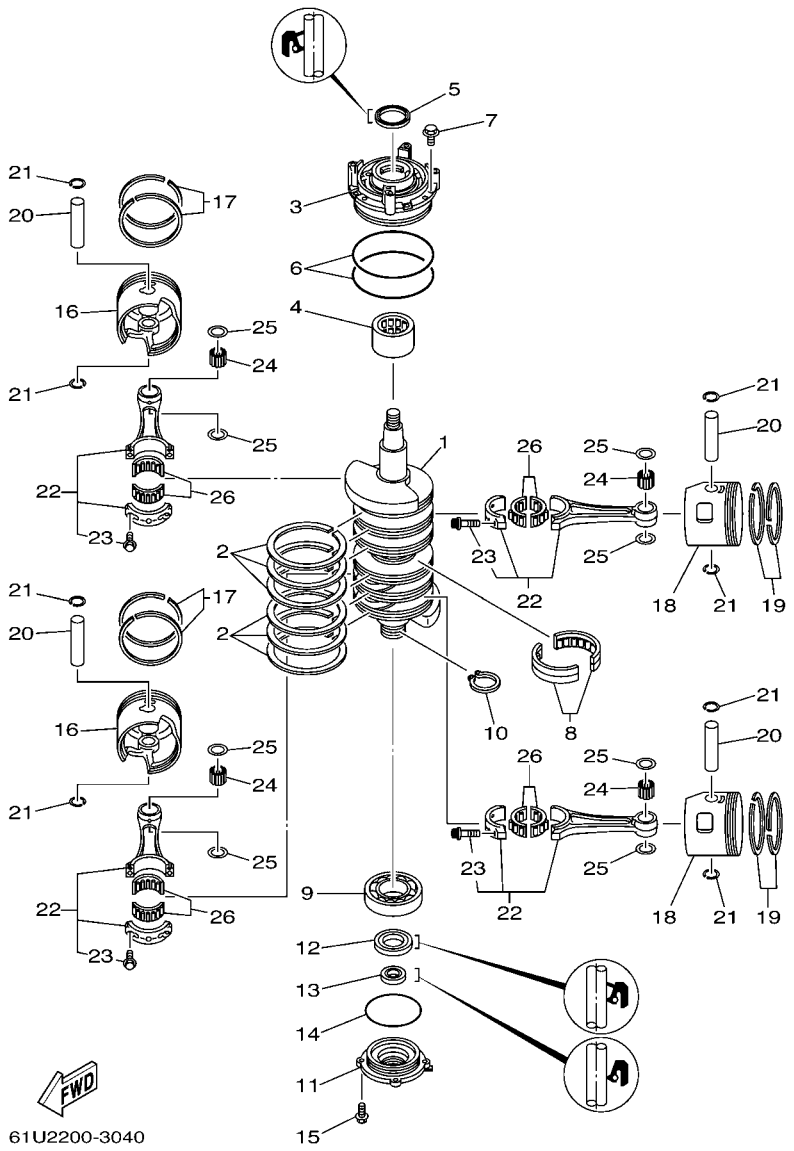

FIG. 4 CRANKSHAFT & PISTON CIGUENAL & PISTON

REF. NO.	PART NO. CODIGO Nº	DESCRIPTION DESCRIPCION	ET	E	WH	MH		REMARKS OBSERVACIONES
20	6K7–11633–00	PIN, PISTON PASADOR, PISTON	4	4	4	4		
21	6E5–11634–00	CLIP, PISTON PIN PRESILLA, BULON DE PISTON	8	8	8	8		
22	6E5–11650–01	CONNECTING ROD ASSY BIELA COMPLETA	4	4	4	4		
23	90109–08022	.BOLT .PERNO	2	2	2	2		
24	93603–21111	PIN, DOWEL PASADOR DE CLAVIJA	1	1	1	1		UN(QTY:120) UN(QTY:120)
25	90201–21M75	WASHER, PLATE ARANDELA PLANA	8	8	8	8		
26	93310–836U0	BEARING COJINETE DE RODILLOS	4	4	4	4		

FIG. 5 CYLINDER & CRANKCASE 2 CILINDRO & CARTER 2

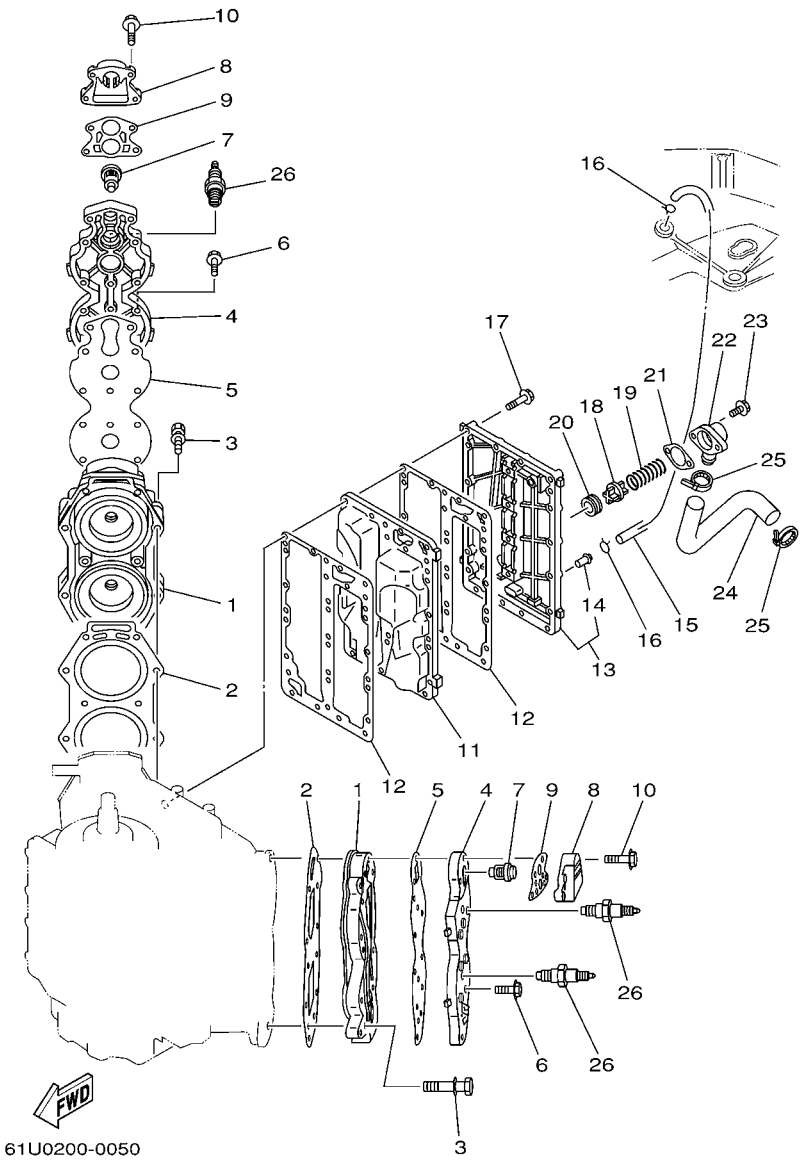

REF. NO.	PART NO. CODIGO Nº	DESCRIPTION DESCRIPCION	ET	E	WH	MH		REMARKS OBSERVACIONES
1	6E5–11111–00–1S	HEAD, CYLINDER 1 CULATA CILINDRO 1	2	2	2	2		
2	6E5–11181–A1	GASKET, CYLINDER HEAD 1 JUNTA, DE CULATA 1	2	2	2	2		
3	90119–08MA8	BOLT, WITH WASHER TORNILLO CON ARANDELA	20	20	20	20		
4	6E5–11191–01–1S	COVER, CYLINDER HEAD 1 TAPA CULATA DE CILINDRO 1	2	2	2	2		
5	6E5–11193–A0	GASKET, HEAD COVER 1 EMPAQUE	2	2	2	2		
6	90119–06MA4	BOLT, WITH WASHER TORNILLO CON ARANDELA	24	24	24	24		
7	6E5–12411–30	THERMOSTAT TERMOSTAT	2	2	2	2		
8	6G5–12413–00–1S	COVER, THERMOSTAT CUBIERTA TERMOSTATO	2	2	2	2		
9	688–12414–A1	GASKET, COVER EMPAQUE	2	2	2	2		
10	90119–06MA6	BOLT, WITH WASHER TORNILLO CON ARANDELA	8	8	8	8		
11	6E5–41111–00–1S	INNER COVER, EXHAUST CUBIERTA INTERIOR DE ESCAPE	1	1	1	1		
12	6E5–41112–A1	GASKET, EXHAUST INNER COVER EMPAQUE	2	2	2	2		
13	6N7–41113–00–1S	OUTER COVER, EXHAUST CUBOERTA EXTERIOR DE ESCAPE	1	1	1	1		
14	650–24378–00	.PIPE, JOINT 4 .TUBO DE UNION 4	1	1	1	1		
15	6E5–24312–00	PIPE 2 TUBO 2	1	1	1	1		
16	90467–08004	CLIP PRESILLA	2	2	2	2		
17	90119–06MA5	BOLT, WITH WASHER TORNILLO CON ARANDELA	23	23	23	23		
18	6G5–12416–00	VALVE, PRESSURE CONTROL VALVULA DE CONTROL DE PRESION	1	1	1	1		
19	90501–16M11	SPRING, COMPRESSION RESORTE DE COMPRESION	1	1	1	1		
20	90480–20M05	GROMMET TAPON	1	1	1	1		
21	6G5–11382–A1	GASKET 2 EMPAQUE 2	1	1	1	1		
22	6G5–11372–00–1S	COVER, BYPASS 2 CUBIERTA	1	1	1	1		
23	90119–06MA2	BOLT, WITH WASHER TORNILLO CON ARANDELA	2	2	2	2		
24	6E5–12576–00	HOSE 1 MANGUERA 1	1	1	1	1		
25	90465–13M18	CLAMP BRIDA	2	2	2	2		
26	94702–00160	PLUG, SPARK (NGK B8HS-10) BUJIA (NGK B8HS-10)	4	4	4	4		
	94702–00247	PLUG, SPARK (NGK BR8HS-10) BUJIA (NGK BR8HS-10)	4	4				CHN,CAR(EPA-CE/CE) CHN,CAR(EPA-CE/CE)

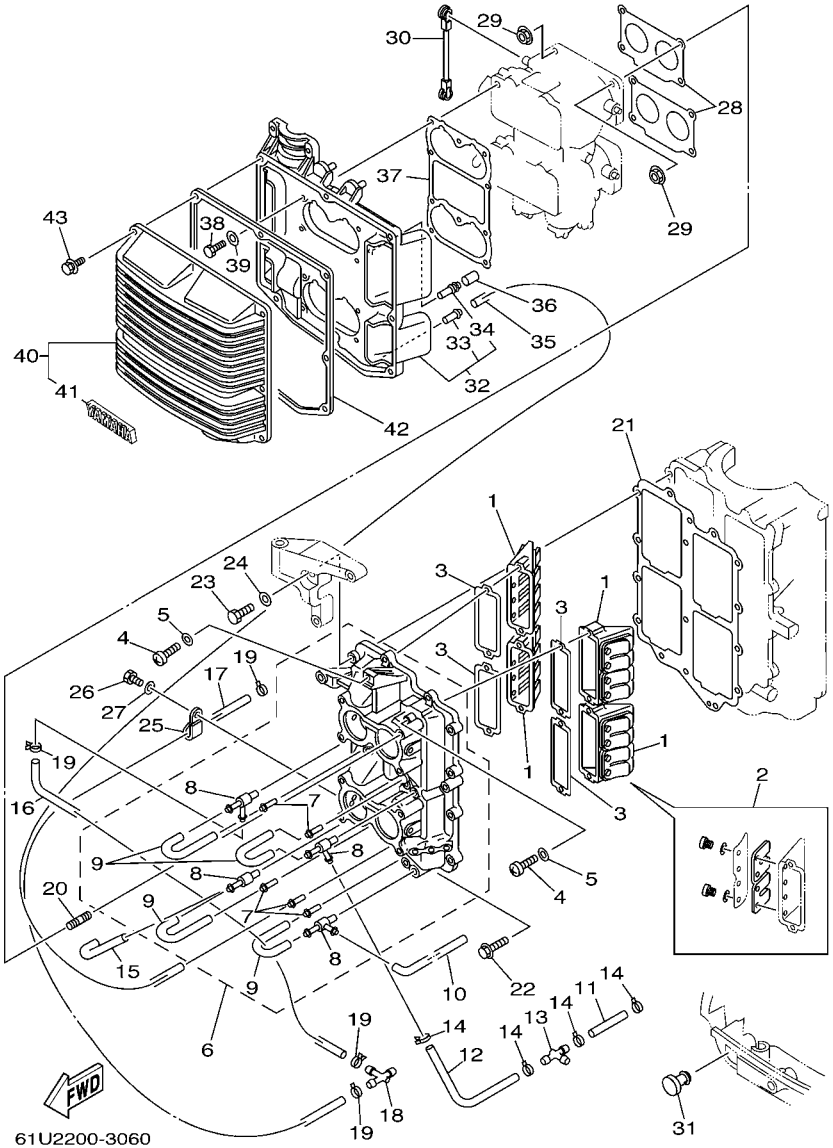

FIG. 6 INTAKE 1 — ADMISION 1

REF. NO.	PART NO. CODIGO Nº	DESCRIPTION DESCRIPCION	ET	E	WH	MH		REMARKS OBSERVACIONES
1	6E5–13610–00	REED VALVE ASSY VALVULA DE LAMINAS COMPLETA			4	4		
2	6E5–W0004–00	.REED SET .JUEGO DE VALVULAS DE LENGUETA			1	1		
3	6E5–13621–A1	GASKET, VALVE SEAT JUNTA, DE VALV.DE EMPAQUE			4	4		
4	97880–05025	SCREW, PAN HEAD TORNILLO DE CABEZA CON PLANA			8	8		
5	92990–05600	WASHER, PLATE ARANDELA PLANA			8	8		
6	6E5–13641–03–1S	MANIFOLD 1 MULTIPLE 1			1	1		
7	624–14485–00	.PIPE, JOINT .TUBO DE UNION			5	5		
8	6E5–11370–01	.CHECK VALVE ASSY .VALVULA DE CONTROL COMPL.			4	4		
9	90445–07M28	.HOSE (L70) .TUBO (L70)			4	4		
10	90445–07M24	HOSE (L240) TUBO (L240)			1	1		
11	90445–07M25	HOSE (L53) TUBO (L53)			1	1		
12	90445–07M23	HOSE (L408) TUBO (L408)			1	1		
13	6E0–24378–00	PIPE, JOINT 4 TUBO DE UNION 4			1	1		
14	90468–07M02	CLIP PRESILLA			4	4		
15	90445–07M46	HOSE (L360) TUBO (L360)			1	1		
16	90445–07M59	HOSE (L1160) TUBO (L1160)			1	1		
17	90445–07M27	HOSE (L310) TUBO (L310)			1	1		
18	6E0–24378–00	PIPE, JOINT 4 TUBO DE UNION 4			1	1		
19	90468–07M02	CLIP PRESILLA			4	4		
20	90116–06M30	BOLT, STUD ESPARRAGO			8	8		
21	6E5–13645–A1	GASKET, MANIFOLD 1 EMPAQUE			1	1		
22	90119–06MA3	BOLT, WITH WASHER TORNILLO CON ARANDELA			9	9		
23	97013–06045	BOLT PERNO			3	3		
24	92903–06600	WASHER, PLATE RONDANA SENCILLA			3	3		
25	90465–06M86	CLAMP BRIDA			1	1		
26	97095–06012	BOLT PERNO				1		
27	92995–06600	WASHER ARANDELA				1		

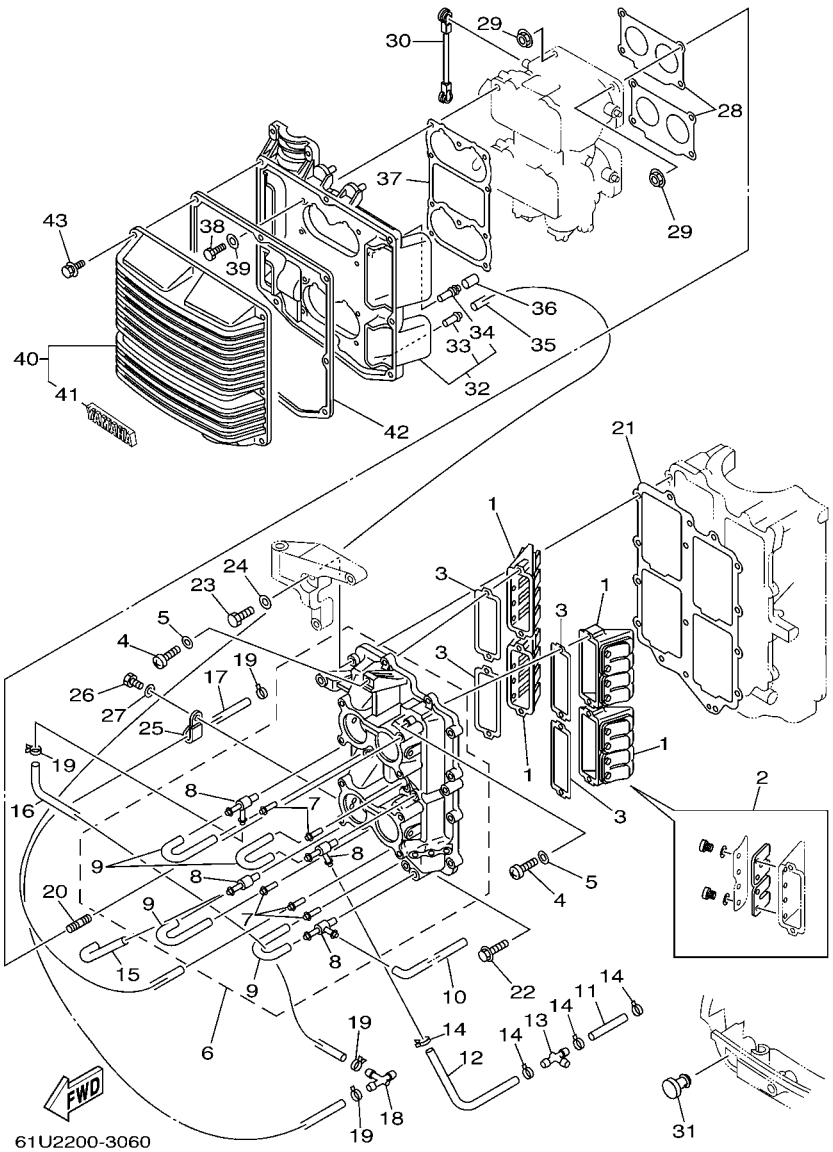

FIG. 6 INTAKE 1 — ADMISION 1

REF. NO.	PART NO. CODIGO Nº	DESCRIPTION DESCRIPCION	ET	E	WH	MH		REMARKS OBSERVACIONES
28	6E5–14198–A2	GASKET EMPAQUE			2	2		
29	90179–06M28	NUT TUERCA			8	8		
30	6E5–41217–01	ROD, ACCEL. LEVER VARILLA PALANCA ACELERADOR			1	1		
31	6G1–42748–00	GROMMET TAPON			1	1		
32	61U–14417–00–94	COVER 1 CUBIERTA 1			1	1		
33	624–14485–00	.PIPE, JOINT .TUBO DE UNION			1	1		
34	6E5–14485–00	.PIPE, JOINT .TUBO DE UNION			1	1		
35	90445–07M23	HOSE (L408) TUBO (L408)			1	1		
36	647–14395–60	CAP, OVERFLOW PIPE TAPA DE TUBO REBOSAMIENTO			1	1		
37	6E5–14483–A1	GASKET EMPAQUE			1	1		
38	97013–06020	BOLT PERNO			8	8		
39	92903–06600	WASHER, PLATE RONDANA SENCILLA			8	8		
40	6E5–14418–00	COVER 2 CUBIERTA 2			1	1		
41	6E5–1441K–00	.EMBLEM .EMBLEMA			1	1		
42	6E5–14416–A1	GASKET, AIR CLEANER EMPAQUE			1	1		
43	90119–06M31	BOLT, WITH WASHER TORNILLO CON ARANDELA			8	8		

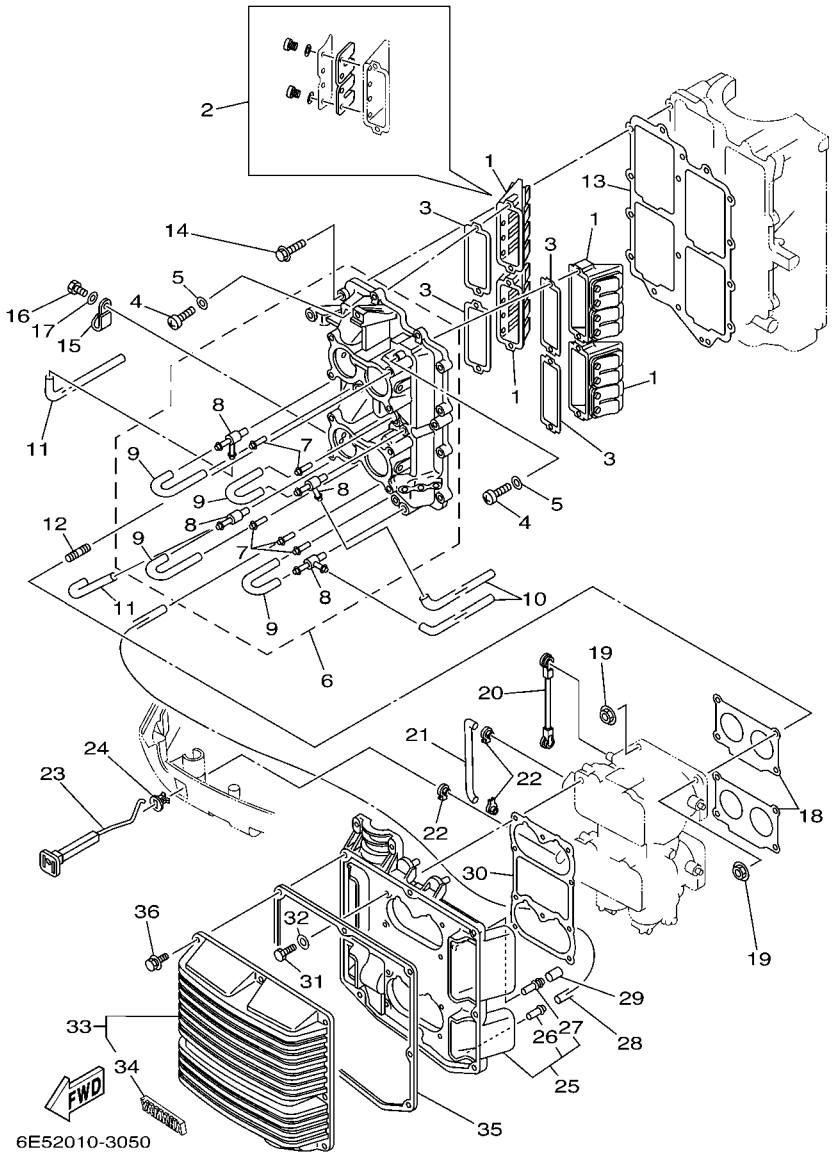

FIG. 7 INTAKE 2 — ADMISION 2

REF. NO.	PART NO. CODIGO Nº	DESCRIPTION DESCRIPCION	ET	E	WH	MH		REMARKS OBSERVACIONES
1	6E5–13610–00	REED VALVE ASSY VALVULA DE LAMINAS COMPLETA	4	4				
2	6E5–W0004–00	.REED SET .JUEGO DE VALVULAS DE LENGUETA	1	1				
3	6E5–13621–A1	GASKET, VALVE SEAT JUNTA, DE VALV.DE EMPAQUE	4	4				
4	97880–05025	SCREW, PAN HEAD TORNILLO DE CABEZA CON PLANA	8	8				
5	92990–05600	WASHER, PLATE ARANDELA PLANA	8	8				
6	6E5–13641–03–1S	MANIFOLD 1 MULTIPLE 1	1	1				
7	624–14485–00	.PIPE, JOINT .TUBO DE UNION	5	5				
8	6E5–11370–01	.CHECK VALVE ASSY .VALVULA DE CONTROL COMPL.	4	4				
9	90445–07M28	.HOSE (L70) .TUBO (L70)	4	4				
10	90445–07M24	HOSE (L240) TUBO (L240)	2	2				
11	90445–07M46	HOSE (L360) TUBO (L360)	2	2				
12	90116–06M30	BOLT, STUD ESPARRAGO	8	8				
13	6E5–13645–A1	GASKET, MANIFOLD 1 EMPAQUE	1	1				
14	90119–06MA3	BOLT, WITH WASHER TORNILLO CON ARANDELA	12	12				
15	90465–06M86	CLAMP BRIDA	1	1				
16	97095–06012	BOLT PERNO	1	1				
17	92995–06600	WASHER ARANDELA	1	1				
18	6E5–14198–A2	GASKET EMPAQUE	2	2				
19	90179–06M28	NUT TUERCA	8	8				
20	6E5–41217–01	ROD, ACCEL. LEVER VARILLA PALANCA ACELERADOR	1	1				
21	6E5–41256–01	ROD, CHOKE 1 VARILLA DE AHOGADOR	1	1				
22	661–41262–02	JOINT, CHOKE LEVER CONECTOR DE AHOGADOR	3	3				
23	6E5–41271–02	KNOB, CHOKE PERILLA AHOGADOR	1	1				
24	689–41273–00	GROMMET TAPON PROTECTOR	1	1				
25	6E5–14417–10–94	COVER 1 CUBIERTA 1	1	1				
26	624–14485–00	.PIPE, JOINT .TUBO DE UNION	1	1				
27	6E5–14485–00	.PIPE, JOINT .TUBO DE UNION	1	1				

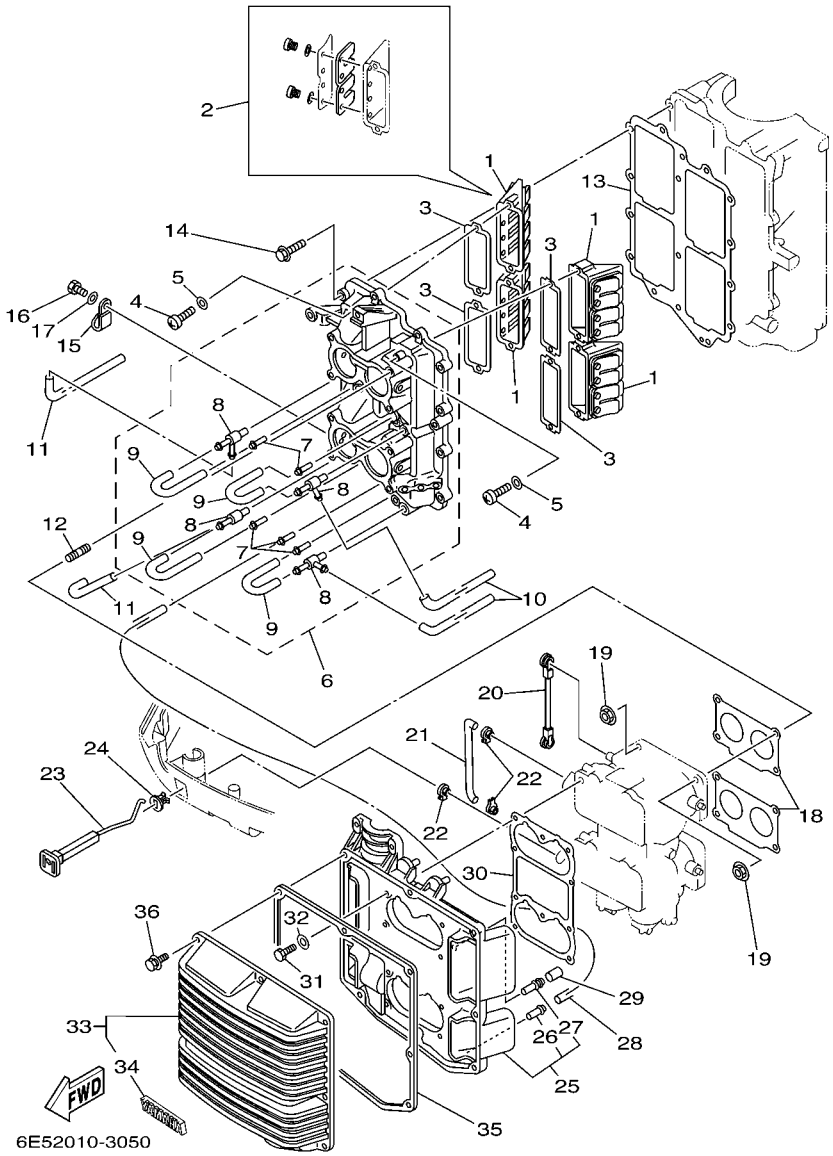

FIG. 7 INTAKE 2 — ADMISION 2

REF. NO.	PART NO. CODIGO Nº	DESCRIPTION DESCRIPCION	ET	E	WH	MH		REMARKS OBSERVACIONES
28	90445–07M23	HOSE (L408) TUBO (L408)	1	1				
29	647–14395–60	CAP, OVERFLOW PIPE TAPA DE TUBO REBOSAMIENTO	1	1				
30	6E5–14483–A1	GASKET EMPAQUE	1	1				
31	97013–06020	BOLT PERNO	8	8				
32	92903–06600	WASHER, PLATE RONDANA SENCILLA	8	8				
33	6E5–14418–00	COVER 2 CUBIERTA 2	1	1				
34	6E5–1441K–00	.EMBLEM .EMBLEMA	1	1				
35	6E5–14416–A1	GASKET, AIR CLEANER EMPAQUE	1	1				
36	90119–06M31	BOLT, WITH WASHER TORNILLO CON ARANDELA	8	8				

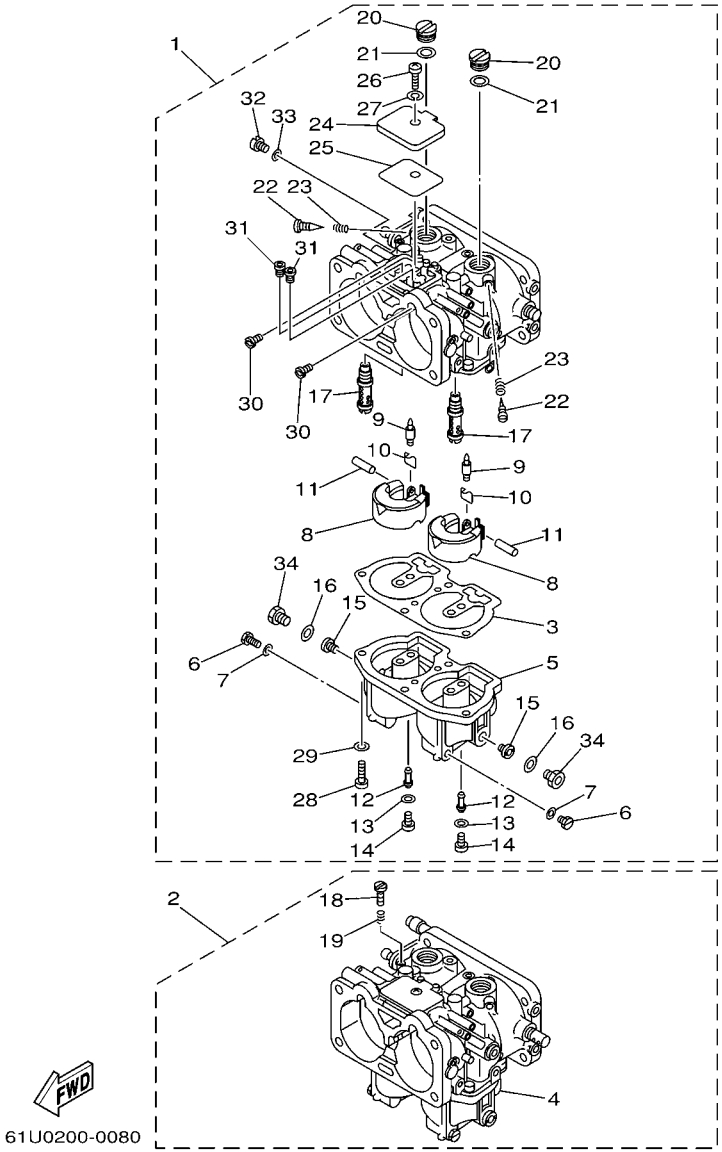

FIG. 8 CARBURETOR 1 — CARBURADOR 1

REF. NO.	PART NO. CODIGO Nº	DESCRIPTION DESCRIPCION	ET	E	WH	MH		REMARKS OBSERVACIONES
1	61U–14301–M2	CARBURETOR ASSY 1 CARBURADOR COMPLETO 1			1	1		
2	61U–14302–M2	CARBURETOR ASSY 2 CARBURADOR COMPLETO 2			1	1		
3	6E5–14384–04	.GASKET, FLOAT CHAMBER .EMPAQUE DE CAMARA DE BOIA			2	2		
4	61U–14381–00	.BODY, FLOAT CHAMBER .CUERPO DE CAMARA DE BOIA			1	1		#2 #2
5	61U–14381–M0	.BODY, FLOAT CHAMBER .CUERPO DE CAMARA DE BOIA			1	1		#1 #1
6	6E5–14383–01	.SCREW, DRAIN .TORNILLO DE DRENAJE			4	4		
7	6J8–14959–00	.GASKET .EMPAQUE			4	4		
8	6E5–14385–02	.FLOAT .BOIA			4	4		
9	6E5–14546–00	.VALVE, NEEDLE .VALVULA DE AGUJA			4	4		
10	6E5–14159–00	.CLIP .PRESILLA			4	4		
11	6E5–14386–02	.PIN, FLOAT .PASADOR DE BOIA			4	4		
12	61U–1492F–39	.JET, AIR SLOW .ESPREA			4	4		
13	61U–14959–00	.GASKET .EMPAQUE			4	4		
14	61U–14394–00	.VALVE, DRAIN .VALVULA DE DRENAJE			4	4		
15	61A–1492E–87	.JET, MAIN (#174) .INYECTOR, PRINCIPAL (#174)			4	4		
16	6E5–14398–01	.GASKET .EMPAQUE			4	4		
17	6E5–1492A–00	.NOZZLE, MAIN .BOQUILLA, PRINCIPAL			4	4		
18	6E5–14321–00	.SCREW, THROTTLE .TORNILLO DE OBTURADOR			1	1		#2 #2
19	6J8–14334–00	.SPRING, THROTTLE .RESORTE DE AJUSTADOR DE AIRE			1	1		#2 #2
20	6E5–14328–01	.PLUG .TORNILLO TOPE DE PILOTO			4	4		
21	6E5–14979–00	.GASKET .EMPAQUE DE ARRANQUE			4	4		
22	6E5–14323–03	.SCREW, AIR ADJUSTING .TORNILLO DE AJUSTE DE AIRE			4	4		
23	6E5–14223–00	.SPRING, AIR ADJUSTING .RESORTE, AJUSTE DE AIRE			4	4		
24	6E5–14527–01	.PLATE .PLACA			2	2		
25	6E5–14959–01	.GASKET .EMPAQUE			2	2		
26	97880–05008	.SCREW, PAN HEAD .TORNILLO DE CABEZA CON PLANA			2	2		
27	92900–05100	.WASHER .RONDANA			2	2		

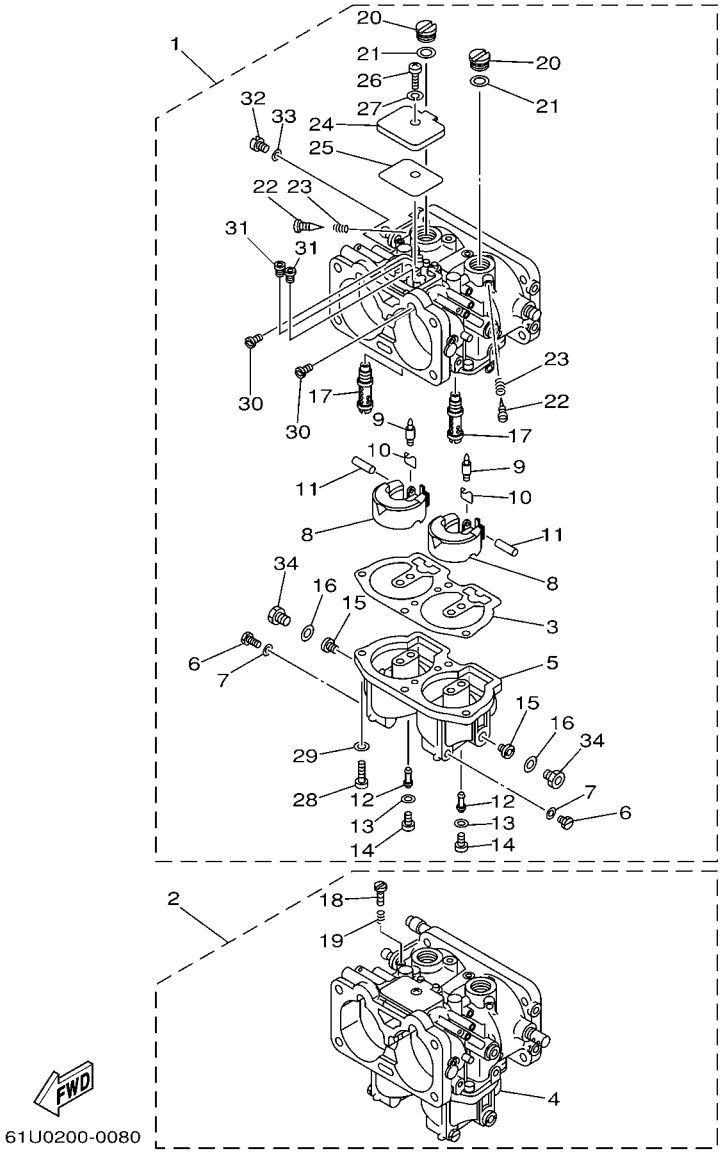

FIG. 8 CARBURETOR 1 CARBURADOR 1

REF. NO.	PART NO. CODIGO Nº	DESCRIPTION DESCRIPCION	ET	E	WH	MH		REMARKS OBSERVACIONES
28	97880–05016	.SCREW, PAN HEAD .TORNILLO DE CABEZA CON PLANA			8	8		
29	92900–05100	.WASHER .RONDANA			8	8		
30	61A–1492H–12	.JET, SLOW AIR BLEED (#60) .ESPREA AIRE (#60)			4	4		
31	61A–1492G–54	.JET, MAIN AIR BLEED .INYECTOR, PRINCIPAL AIRE			4	4		
32	6E5–14324–00	.SCREW, FLAT HEAD .TORNILLO CABEZA PLANA			2	2		
33	6J8–14959–00	.GASKET .EMPAQUE			2	2		
34	61A–14383–01	.SCREW, DRAIN .TORNILLO DE DRENAJE			4	4		

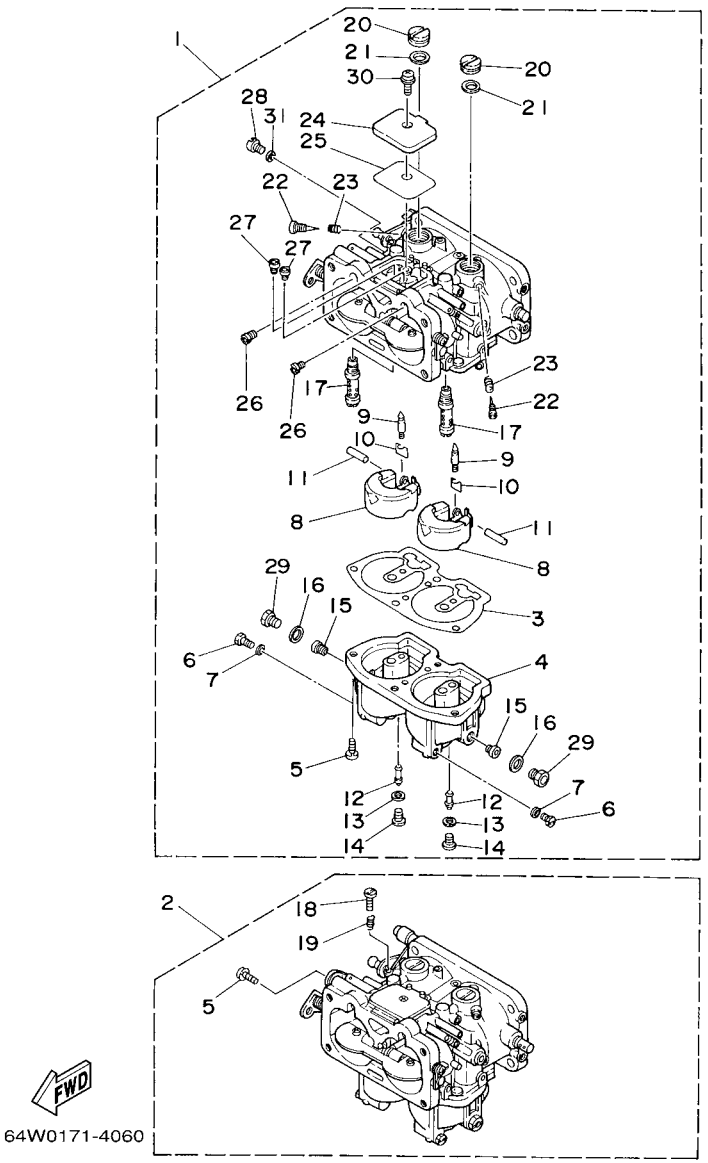

FIG. 9 CARBURETOR 2 — CARBURADOR 2

REF. NO.	PART NO. CODIGO Nº	DESCRIPTION DESCRIPCION	ET	E	WH	MH		REMARKS OBSERVACIONES
1	61U–14301–03	CARBURETOR ASSY 1 CARBURADOR COMPLETO 1	1	1				
	61U–14301–10	CARBURETOR ASSY 1 CARBURADOR COMPLETO 1	1					CAR(EPA/EPA-CE) CAR(EPA/EPA-CE)
2	61U–14302–03	CARBURETOR ASSY 2 CARBURADOR COMPLETO 2	1	1				
	61U–14302–10	CARBURETOR ASSY 2 CARBURADOR COMPLETO 2	1					CAR(EPA/EPA-CE) CAR(EPA/EPA-CE)
3	6E5–14384–04	.GASKET, FLOAT CHAMBER .EMPAQUE DE CAMARA DE BOIA	2	2				
	64D–14384–01	.GASKET, FLOAT CHAMBER .EMPAQUE DE CAMARA DE BOIA	2					CAR(EPA/EPA-CE) CAR(EPA/EPA-CE)
4	61U–14381–00	.BODY, FLOAT CHAMBER .CUERPO DE CAMARA DE BOIA	2	2				
5	97980–05116	.SCREW, WITH WASHER .TORNILLO, CON ARANDELA	9	9				
6	6E5–14383–01	.SCREW, DRAIN .TORNILLO DE DRENAJE	4	4				
7	6J8–14995–00	.GASKET .EMPAQUE	4	4				
8	6E5–14385–02	.FLOAT .BOIA	4	4				
9	6E5–14546–00	.VALVE, NEEDLE .VALVULA DE AGUJA	4	4				
10	6E5–14159–00	.CLIP .PRESILLA	4	4				
11	6E5–14386–02	.PIN, FLOAT .PASADOR DE BOIA	4	4				
12	61U–1492F–39	.JET, AIR SLOW .ESPREA	4	4				
13	61U–14959–00	.GASKET .EMPAQUE	4	4				
14	61U–14394–00	.VALVE, DRAIN .VALVULA DE DRENAJE	4	4				
	64D–14394–00	.VALVE, DRAIN .VALVULA DE DRENAJE	4					CAR(EPA/EPA-CE) CAR(EPA/EPA-CE)
15	61A–1492E–87	.JET, MAIN (#174) .INYECTOR, PRINCIPAL (#174)	4	4				
16	6E5–14398–01	.GASKET .EMPAQUE	4	4				
17	6E5–1492A–00	.NOZZLE, MAIN .BOQUILLA, PRINCIPAL	4	4				
18	6E5–14321–00	.SCREW, THROTTLE .TORNILLO DE OBTURADOR	1	1				#2 #2
19	6J8–14334–00	.SPRING, THROTTLE .RESORTE DE AJUSTADOR DE AIRE	1	1				#2 #2
20	6E5–14328–01	.PLUG .TORNILLO TOPE DE PILOTO	4	4				
21	6E5–14979–00	.GASKET .EMPAQUE DE ARRANQUE	4	4				
22	6E5–14323–03	.SCREW, AIR ADJUSTING .TORNILLO DE AJUSTE DE AIRE	4	4				
23	6E5–14223–00	.SPRING, AIR ADJUSTING .RESORTE, AJUSTE DE AIRE	4	4				

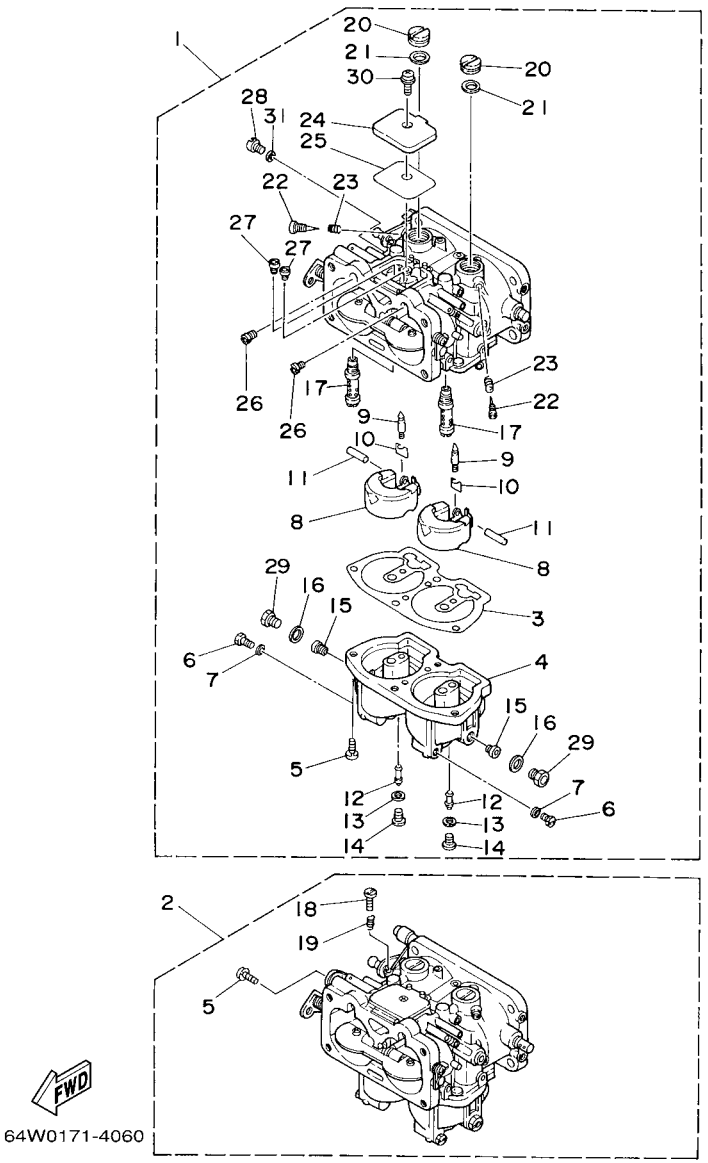

FIG. 9 CARBURETOR 2 CARBURADOR 2

REF. NO.	PART NO. CODIGO Nº	DESCRIPTION DESCRIPCION	ET	E	WH	MH		REMARKS OBSERVACIONES
24	6E5–14527–01	.PLATE .PLACA	2	2				
25	6E5–14959–01	.GASKET .EMPAQUE	2	2				
26	61A–1492H–12	.JET, SLOW AIR BLEED (#60) .ESPREA AIRE (#60)	4	4				
27	61A–1492G–54	.JET, MAIN AIR BLEED .INYECTOR, PRINCIPAL AIRE	4	4				
28	6E5–14324–00	.SCREW, FLAT HEAD .TORNILLO CABEZA PLANA	2	2				
29	61A–14383–01	.SCREW, DRAIN .TORNILLO DE DRENAJE	4	4				
30	97980–05108	.SCREW, WITH WASHER .TORNILLO, CON ARANDELA	2	2				
31	6J8–14959–00	.GASKET .EMPAQUE	2	2				

FIG. 10 FUEL 1 — COMBUSTIBLE 1

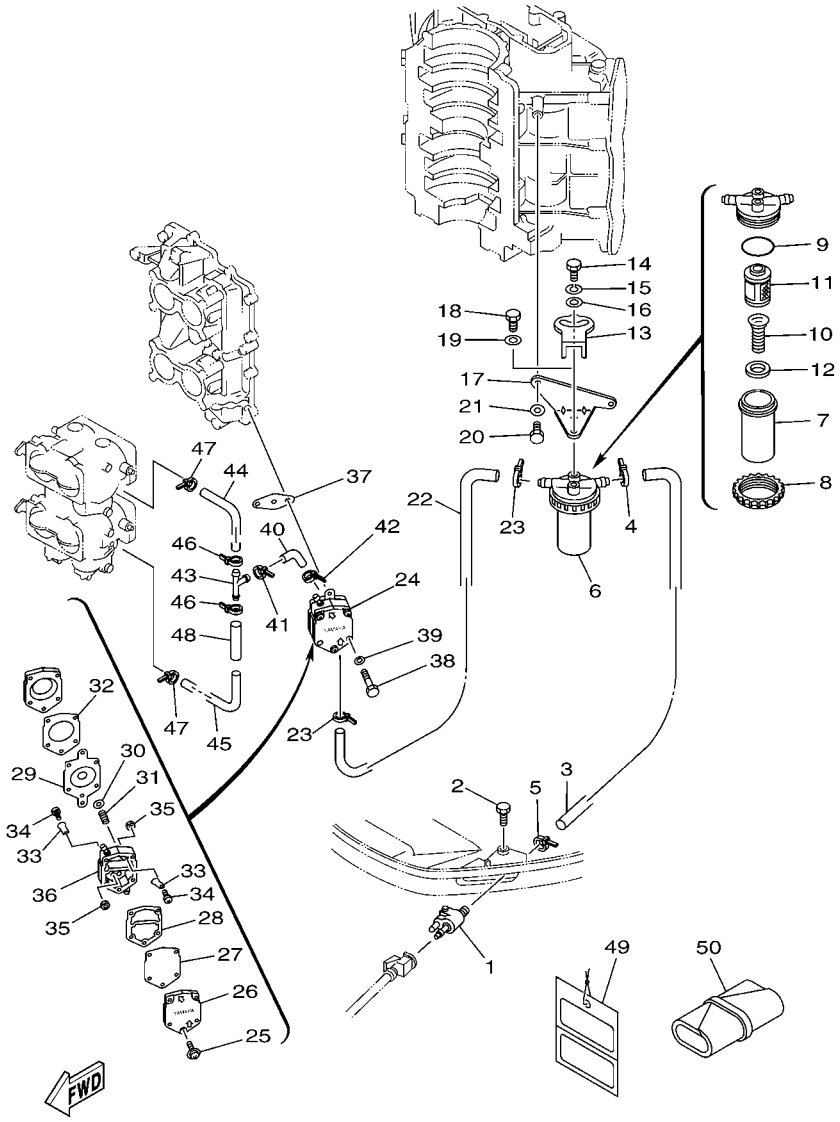

REF. NO.	PART NO. CODIGO Nº	DESCRIPTION DESCRIPCION	ET	E	WH	MH		REMARKS OBSERVACIONES
1	6E5–24304–10	FUEL PIPE JOINT COMP. 1 CONECTOR MANGUERA COMBUST.1	1	1	1	1		
2	97095–06028	BOLT PERNO	1	1	1	1		
3	61U–24313–00	PIPE 3 TUBO 3	1	1	1	1		
4	90465–11M10	CLAMP BRIDA	1	1	1	1		
5	90465–11M10	CLAMP BRIDA	1	1	1	1		
6	61A–24560–04	FILTER ASSY FILTRO COMPLETO	1	1	1	1		
7	61A–24521–00	.CUP, FILTER .COPA DE FILTRO	1	1	1	1		
8	65L–24531–01	.NUT .TUERCA	1	1	1	1		
9	61A–24564–00	.O-RING .ANILLO O	1	1	1	1		
10	61A–24577–01	.SPRING .RESORTE	1	1	1	1		
11	61A–24563–00	.ELEMENT, FILTER .ELEMENTO DEL FILTRO	1	1	1	1		
12	61A–24469–00	.FLOAT, WATER LEVEL .BOIA	1	1	1	1		
13	60H–24558–00	HOLDER, FILTER SOPORTE DE FILTRO	1	1	1	1		
14	97095–06016	BOLT PERNO	1	1	1	1		
15	92995–06100	WASHER, SPRING ARANDELA	1	1	1	1		
16	90201–06068	WASHER, PLATE ARANDELA PLANA	1	1	1	1		
17	61U–24566–01	BRACKET, FILTER SOPORTE DEL FILTRO	1	1	1	1		
18	97095–06014	BOLT PERNO	1	1	1	1		
19	92995–06600	WASHER ARANDELA	1	1	1	1		
20	97095–06016	BOLT PERNO	2	2	2	2		
21	92995–06600	WASHER ARANDELA	2	2	2	2		
22	61U–24314–00	PIPE 4 TUBO 4	1	1				
23	90465–11M10	CLAMP BRIDA	2	2				
24	6E5–24410–03	FUEL PUMP ASSY BOMBA DE COMBUSTIBLE COMPLETA	1	1	1	1		
25	6E5–24444–00	.SCREW .TORNILLO	3	3	3	3		
26	6E5–24413–00	.BODY 2 .CUERPO 2	1	1	1	1		
27	6E5–24471–00	.DIAPHRAGM .DIAFRAGMA	1	1	1	1		

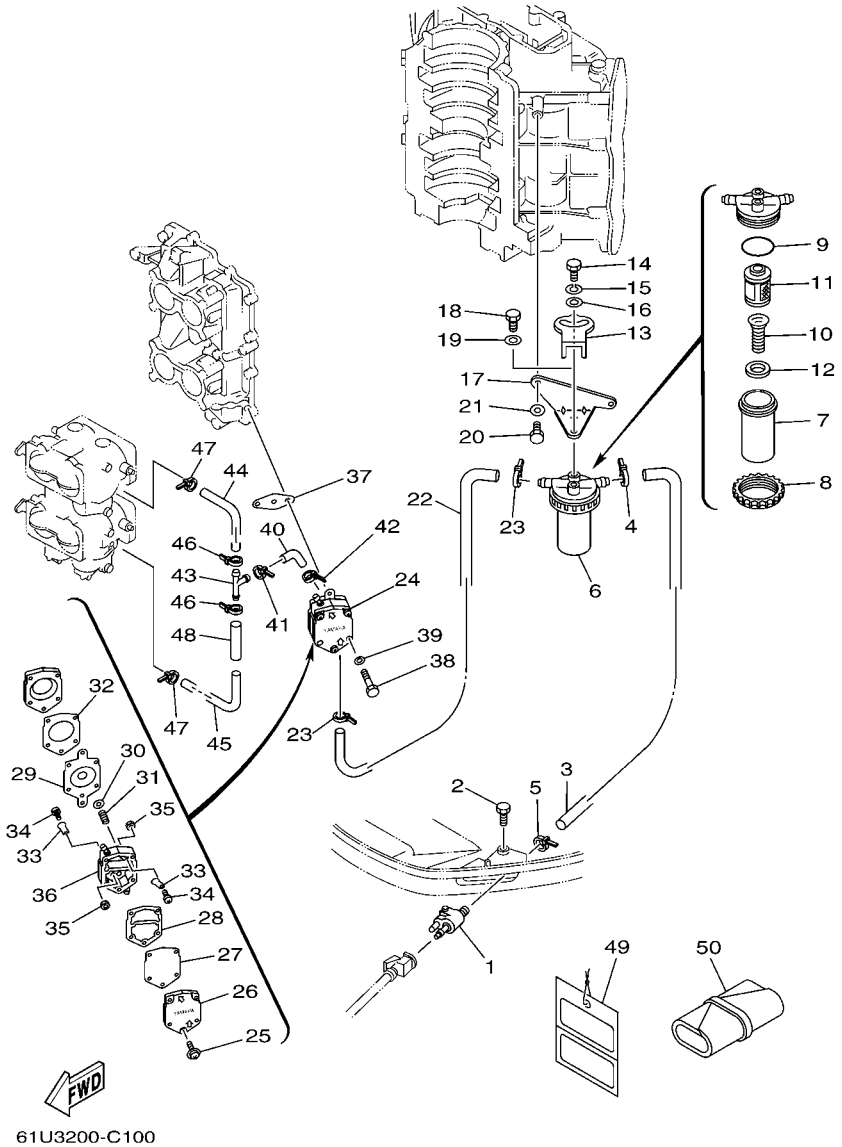

FIG. 10 FUEL 1 — COMBUSTIBLE 1

REF. NO.	PART NO. CODIGO Nº	DESCRIPTION DESCRIPCION	ET	E	WH	MH		REMARKS OBSERVACIONES
28	6E5–24435–00	.GASKET, BODY 2 .EMPAQUE	1	1	1	1		
29	6E5–24411–00	.DIAPHRAGM .DIAFRAGMA	1	1	1	1		
30	648–24424–00	.SEAT, SPRING .PLACA DE RESORTE	1	1	1	1		
31	6E5–24423–00	.SPRING, DIAPHRAGM .RESORTE DE DIAFRAGMA	1	1	1	1		
32	6E5–24434–02	.GASKET, BODY .EMPAQUE	1	1	1	1		
33	6A0–24421–01	.VALVE, CHECK .VALVULA DE RETENCION	4	4	4	4		
34	6A0–14325–00	.SCREW, PAN HEAD .TORNILLO CABEZA REDONDA	4	4	4	4		
35	95380–03600	.NUT .TUERCA	4	4	4	4		
36	6E5–24412–10	.BODY 1 .CUERPO 1	1	1	1	1		
37	650–24431–A0	GASKET, FUEL PUMP 1 EMPAQUE BOMBA COMBUST 1	1	1	1	1		
38	97095–06050	BOLT PERNO	2	2	2	2		
39	92995–06600	WASHER ARANDELA	2	2	2	2		
40	6G5–24316–10	PIPE 6 TUBO 6	1	1	1	1		
41	90465–11M10	CLAMP BRIDA	1	1	1	1		
42	90465–11M10	CLAMP BRIDA	1	1	1	1		
43	6E5–24376–10	PIPE, JOINT 1 TUBO DE UNION 1	1	1	1	1		
44	6G5–24318–10	PIPE, OVERFLOW TUBO DE REBOSAMIENTO	1	1	1	1		
45	6G5–24319–10	PIPE, OIL TUBO DE ACEITE	1	1	1	1		
46	90465–11M10	CLAMP BRIDA	2	2	2	2		
47	90465–11M10	CLAMP BRIDA	2	2	2	2		
48	90446–15M07	HOSE (L60) TUBO (L60)	1	1	1	1		
49	61H–2819R–31	TAG, WARNING ETIQUETA DE ADVERTENCIA	1					FOR CAR FOR CAR
50	656–W2810–02	TOOL KIT JUEGO DE HERRAMIENTAS	1	1	1	1		

FIG. 11 FUEL 2 — COMBUSTIBLE 2

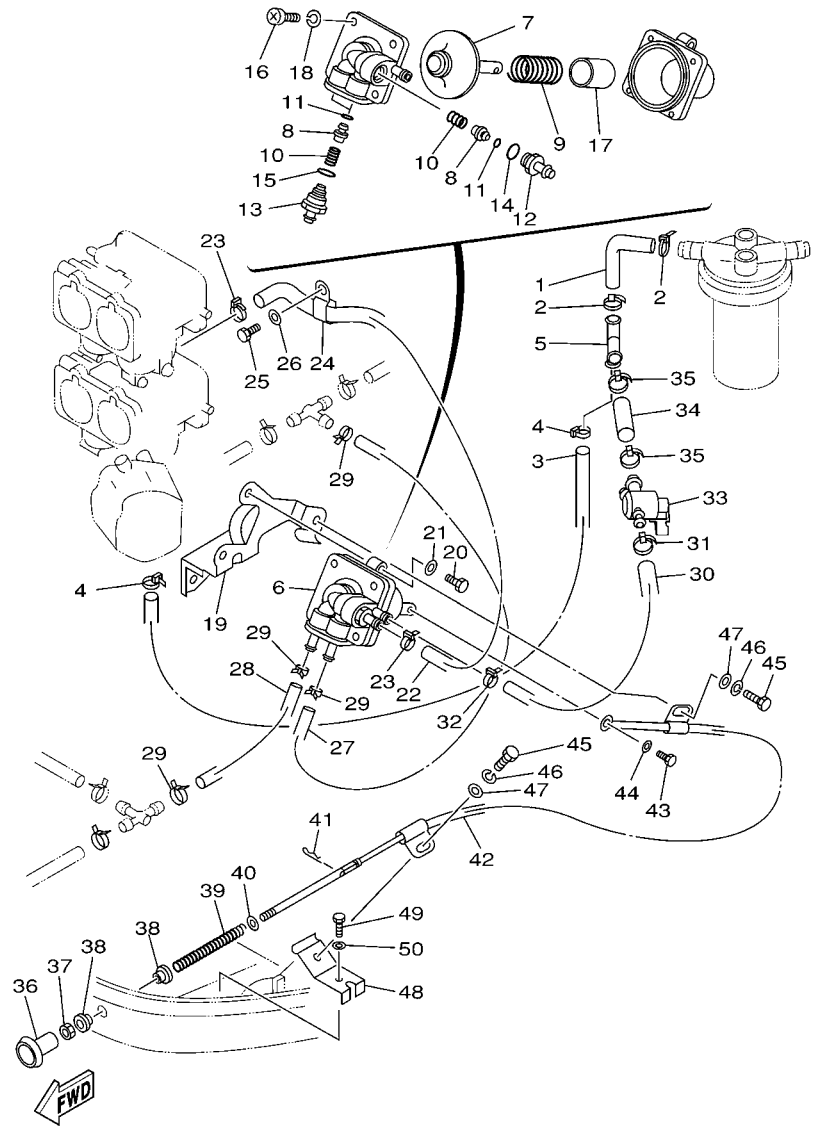

61U0200-8110

REF. NO.	PART NO. CODIGO Nº	DESCRIPTION DESCRIPCION	ET	E	WH	MH		REMARKS OBSERVACIONES
1	61U–24316–00	PIPE 6 TUBO 6			1	1		
2	90465–11M10	CLAMP BRIDA			2	2		
3	90445–13M11	HOSE (L300) TUBO (L300)			1	1		
4	90465–11M10	CLAMP BRIDA			2	2		
5	6E5–24378–00	PIPE, JOINT 3 TUBO DE UNION 3			1	1		
6	61U–24410–00	FUEL PUMP ASSY BOMBA DE COMBUSTIBLE COMPLETA			1	1		
7	61U–24411–00	.DIAPHRAGM .DIAFRAGMA			1	1		
8	61U–24421–00	.VALVE, CHECK .VALVULA DE RETENCION			3	3		
9	61U–24423–00	.SPRING, DIAPHRAGM .RESORTE DE DIAFRAGMA			1	1		
10	61U–24454–00	.SPRING .RESORTE			3	3		
11	61U–24486–00	.O-RING .ANILLO O			3	3		
12	61U–24461–00	.PIPE, JOINT .TUBO DE UNION			1	1		
13	61U–24478–00	.JOINT .UNION			2	2		
14	61U–24479–00	.O-RING .ANILLO O			1	1		
15	61U–24489–00	.O-RING .ANILLO O			2	2		
16	97880–06016	.SCREW, PAN HEAD .TORNILLO DE CABEZA CON PLANA			4	4		
17	61U–24424–00	.SEAT, SPRING .PLACA DE RESORTE			1	1		
18	92990–06100	.WASHER, SPRING .ARANDELA PLANA			4	4		
19	61U–24491–10	BRACKET, FUEL PUMP SOPORTE BOMBA COMBUSTIBLE			1	1		
20	97095–06020	BOLT PERNO			2	2		
21	92995–06600	WASHER ARANDELA			2	2		
22	61U–24315–00	PIPE 5 TUBO DE DESAGUE			1	1		
23	90465–11M10	CLAMP BRIDA			2	2		
24	90465–08M46	CLAMP BRIDA				1		
25	97095–06012	BOLT PERNO				1		
26	92995–06600	WASHER ARANDELA				1		
27	90445–07MA3	HOSE (L200) TUBO (L200)			1	1		

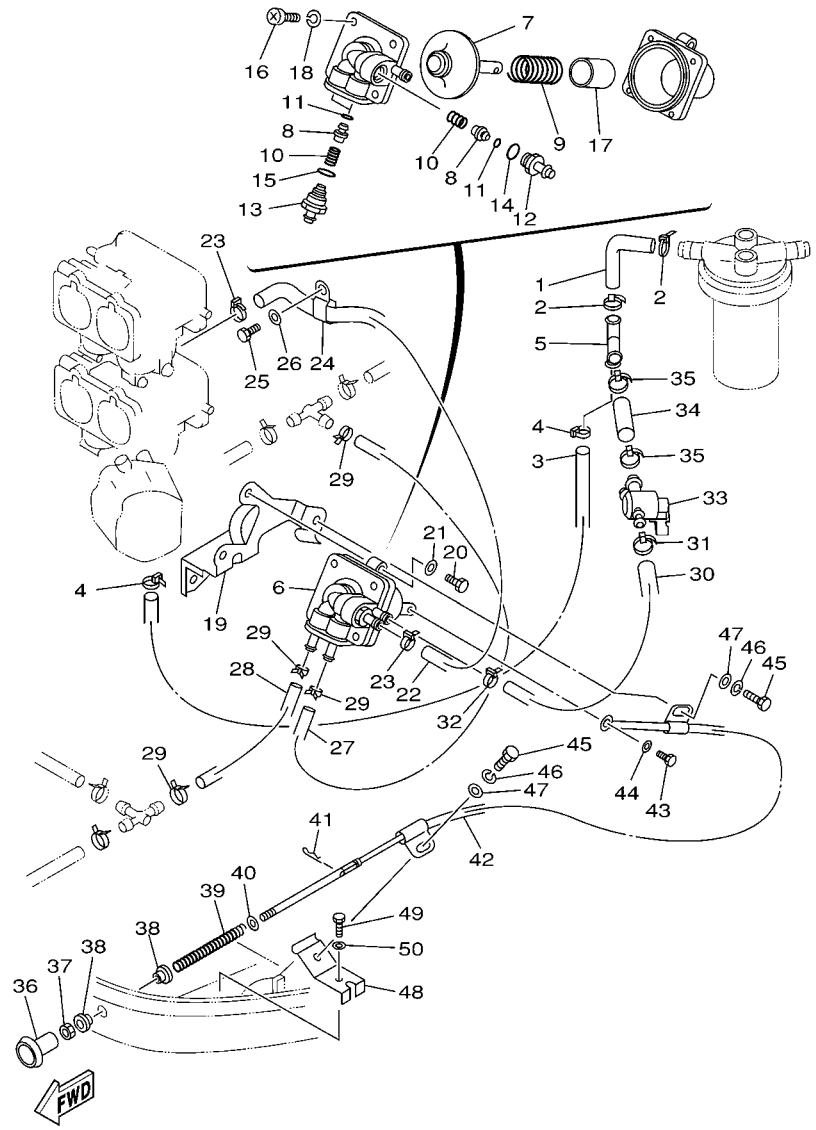

FIG. 11 FUEL 2 — COMBUSTIBLE 2

REF. NO.	PART NO. CODIGO Nº	DESCRIPTION DESCRIPCION	ET	E	WH	MH		REMARKS OBSERVACIONES
28	90445–07M32	HOSE (L120) TUBO (L120)			1	1		
29	90468–07M02	CLIP PRESILLA			4	4		
30	61U–24317–00	PIPE 7 TUBO 7			1	1		
31	90465–11M10	CLAMP BRIDA			1	1		
32	90465–11M10	CLAMP BRIDA			1	1		
33	61A–24500–00	FUEL COCK ASSY 1 GRIFO DE COMBUSTIBLE 1			1	1		
34	90445–13M02	HOSE (L40) TUBO (L40)			1	1		
35	90465–11M10	CLAMP BRIDA			2	2		
36	61U–24496–00	KNOB PERILLA			1	1		
37	95380–05600	NUT TUERCA			1	1		
38	90386–05M54	BUSH BUJE			2	2		
39	90501–07M81	SPRING, COMPRESSION RESORTE DE COMPRESION			1	1		
40	90201–05M06	WASHER, PLATE ARANDELA PLANA			1	1		
41	90468–05M03	CLIP PRESILLA			1	1		
42	61U–24494–00	WIRE, PULL ALAMBLE-JALADOR			1	1		
43	97095–05010	BOLT PERNO			1	1		
44	92995–05600	WASHER ARANDELA			1	1		
45	97095–06012	BOLT PERNO			2	2		
46	92995–06100	WASHER, SPRING ARANDELA			2	2		
47	92995–06600	WASHER ARANDELA			2	2		
48	61U–42744–00	STAY SOPORTE			1	1		
49	97095–06016	BOLT PERNO			1	1		
50	92995–06100	WASHER, SPRING ARANDELA			1	1		

FIG. 12 FUEL 3 — COMBUSTIBLE 3

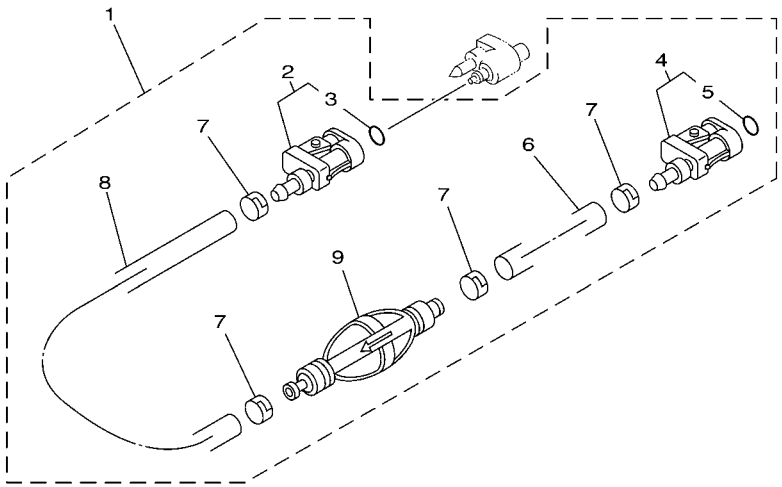

68R3100-C100

REF. NO.	PART NO. CODIGO Nº	DESCRIPTION DESCRIPCION	ET	E	WH	MH		REMARKS OBSERVACIONES
1	6Y2–24306–55	FUEL PIPE COMP. 1 TUBO COMBUST. COMPL 1	1	1				AP FOR TUNA AP FOR TUNA
2	6E5–24305–05	.FUEL PIPE JOINT COMP. 2 .CONECTOR MANGUERA COMBUST. 2	1	1				
3	93210–08287	..O-RING ..ANILLO O	1	1				
4	6Y2–24305–05	.FUEL PIPE JOINT COMP. 2 .CONECTOR MANGUERA COMBUST. 2	1	1				
5	93210–08287	..O-RING ..ANILLO O	1	1				
6	90445–13M01	.HOSE (L2050) .MANGUERA (L2050)	1	1				
7	6E5–24351–51	.BAND 1 .ABRAZADERA 1	4	4				
8	90445–13M00	.HOSE (L850) .MANGUERA (L850)	1	1				
9	6Y2–24360–60	.PRIMER PUMP ASSY .SOPORTE BOMBA	1	1				

FIG. 13 STARTER ARRANQUE

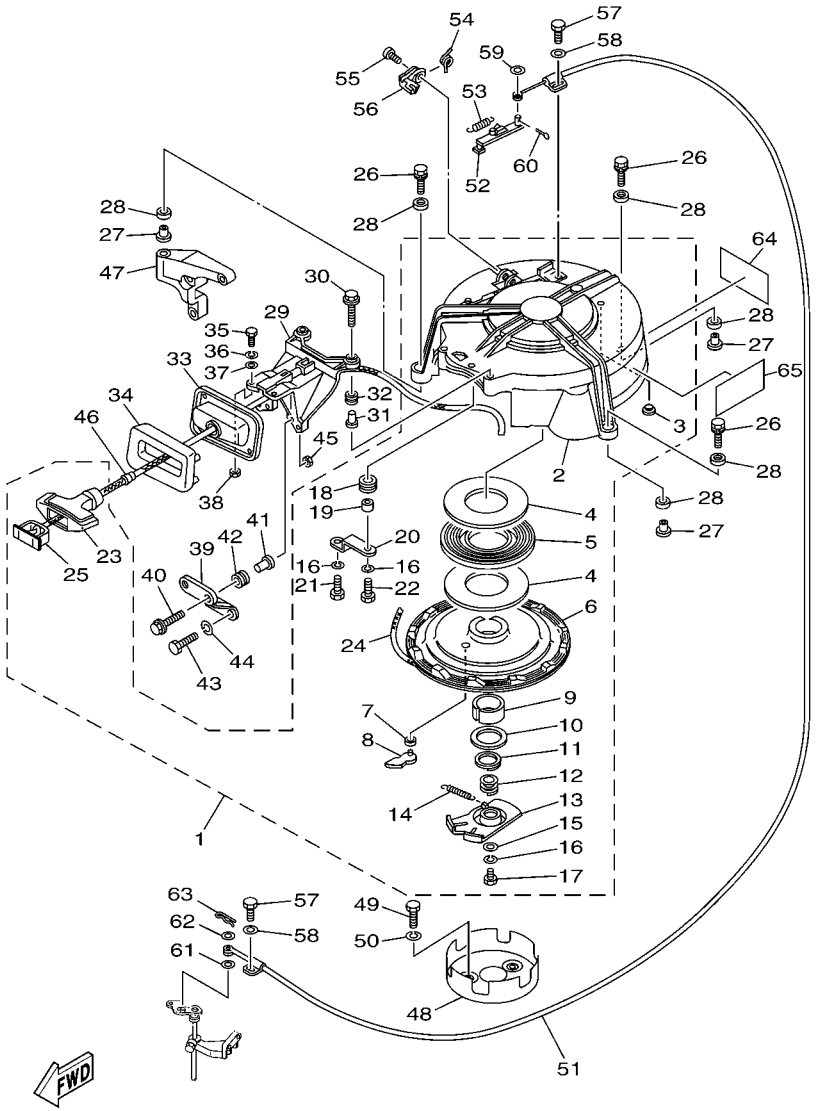

61U3200-C130

*1:CUT FROM 50M ROLLS,PART NO.90890-44374,CUTTING LENGTH 2.3M

*1:CORTE DE UN RODILLO DE 50M , PARTS NUMERO 90890-44374, LARGO DEL CORTE 2.3M

REF. NO.	PART NO. CODIGO Nº	DESCRIPTION DESCRIPCION	ET	E	WH	MH		REMARKS OBSERVACIONES
1	61U–W1571–00	STARTER ASSY ARRANQUE COMPLETO			1	1		
2	61U–15711–00	.CASE, STARTER .CAJA DE ARRANQUE			1	1		
3	696–15773–00	.STAY 3 .SOPORTE 3			5	5		
4	663–15739–00	.WASHER, THRUST .ARANDELA DE EMPUJE AXIAL			2	2		
5	663–15713–00	.SPRING, STARTER .RESORTE DE ARRANQUE			1	1		
6	61U–15714–00	.DRUM, SHEAVE .TAMBOR ROLDANA			1	1		
7	663–15764–00	.COLLAR 1 .COLLAR 1			1	1		
8	663–15741–02	.PAWL, DRIVE .TRINQUETE DE TRACCION			1	1		
9	663–15754–00	.BUSH 2 .BUJE 2			1	1		
10	663–15726–01	.WASHER, FLAT .ARANDELA PLANA			1	1		
11	663–15744–00	.CIRCLIP .SEGURO			1	1		
12	663–15715–00	.SPRING, FRICTION .RESORTE PLACA DE TRACCION			1	1		
13	696–15716–00	.PLATE, DRIVE .PLACA DE TRACCION			1	1		
14	696–15734–00	.SPRING, RETURN .RESORTE DE RETORNO			1	1		
15	663–15719–00	.WASHER, THRUST .ARANDELA DE EMPUJE			1	1		
16	92905–06100	.WASHER .ARANDELA			3	3		
17	97305–06016	.BOLT .TORNILLO			1	1		
18	663–15752–00	.ROLLER, WIRE .RODILLO DE CUERDA			1	1		
19	663–15753–00	.BUSH .BUJE			1	1		
20	61U–15758–00	.GUIDE, ROPE .GUIA DE CUERDA			1	1		
21	97305–06012	.BOLT .TORNILLO			1	1		
22	97305–06025	.BOLT .TORNILLO			1	1		
23	689–15755–01	.HANDLE, STARTER .MANIJA DE ARRANQUE			1	1		
24	*	.WIRE (L:2300MM) .CABLE (L:2300MM)			1	1		*1 *1
25	6F5–15779–02	.COVER .CUBIERTA			1	1		
26	90119–08M26	BOLT, WITH WASHER TORNILLO CON ARANDELA			3	3		
27	90387–08M05	COLLAR COLLAR			3	3		

FIG. 13 STARTER ARRANQUE

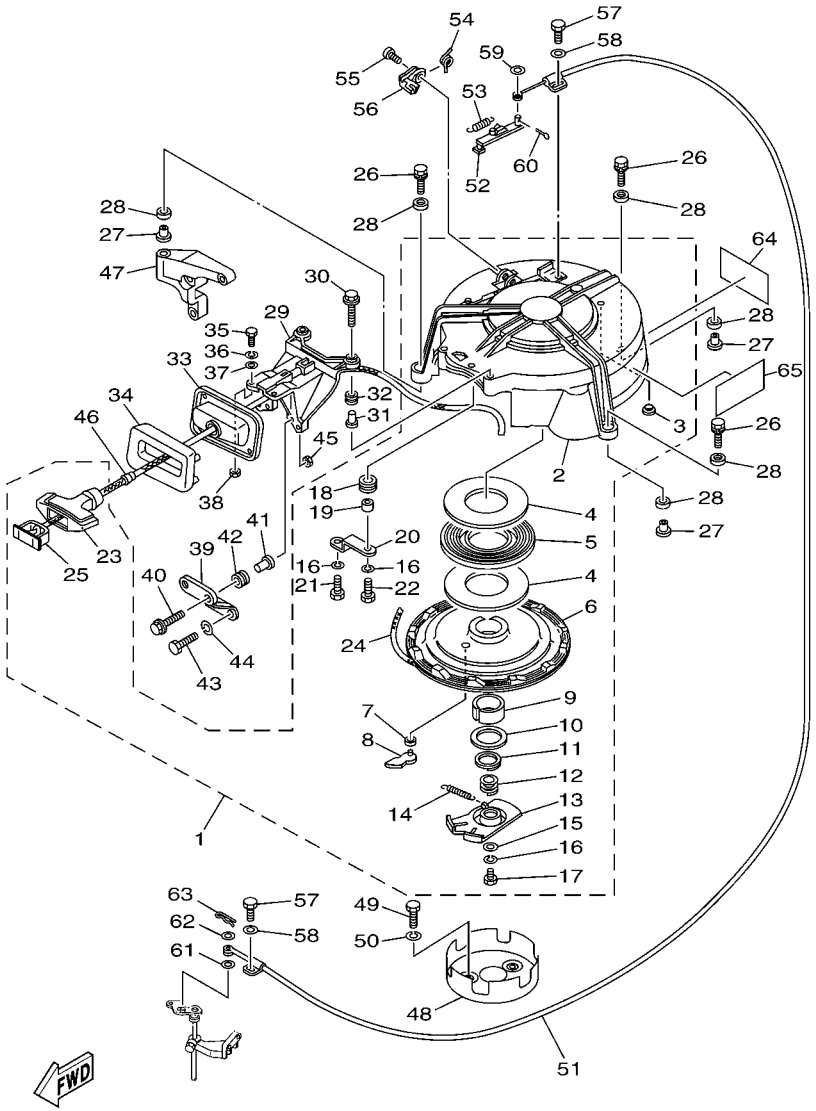

61U3200-C130

*1:CUT FROM 50M ROLLS,PART NO.90890-44374,CUTTING LENGTH 2.3M

*1:CORTE DE UN RODILLO DE 50M , PARTS NUMERO 90890-44374, LARGO DEL CORTE 2.3M

REF. NO.	PART NO. CODIGO Nº	DESCRIPTION DESCRIPCION	ET	E	WH	MH		REMARKS OBSERVACIONES
28	90385–12M04	BUSH BUJE			6	6		
29	697–15787–00–94	ADAPTOR ADAPTADOR			1	1		
30	90119–06M95	BOLT, WITH WASHER TORNILLO CON ARANDELA			2	2		
31	624–42542–00	PIPE TUBO			2	2		
32	6A0–82317–00	DAMPER, IGNITION COIL AMORTIGUADOR BOBINA ENCENDIDO			2	2		
33	692–15758–01–94	GUIDE, ROPE GUIA DE CUERDA			1	1		
34	697–15762–00	SEAL, RUBBER 2 SELLO DE GOMA 2			1	1		
35	97095–06020	BOLT PERNO			2	2		
36	92995–06100	WASHER, SPRING ARANDELA			2	2		
37	92995–06600	WASHER ARANDELA			2	2		
38	95380–06600	NUT, HEXAGON TUERCA			2	2		
39	61U–15772–00	STAY 2 SOPORTE 2			1	1		
40	90119–06M95	BOLT, WITH WASHER TORNILLO CON ARANDELA			2	2		
41	624–42542–00	PIPE TUBO			2	2		
42	6A0–82317–00	DAMPER, IGNITION COIL AMORTIGUADOR BOBINA ENCENDIDO			2	2		
43	97095–06020	BOLT PERNO			2	2		
44	92995–06100	WASHER, SPRING ARANDELA			2	2		
45	95380–06600	NUT, HEXAGON TUERCA			2	2		
46	697–15789–00	DAMPER AMORTIGUADOR			1	1		
47	61U–15774–00–94	STAY 4 SOPORTE 4			1	1		
48	61U–15723–01	PULLEY, STARTER POLEA DE ARRANQUE			1	1		
49	97013–08016	BOLT PERNO			3	3		
50	92903–08100	WASHER, SPRING RONDANA SENCILLA			3	3		
51	61U–15770–00	CABLE COMP., STARTER STOP CABLECOMPL DE SEGURO ARRANQUE			1	1		
52	663–15735–01	GUIDE, CAM GUIA DE LEVA			1	1		
53	90506–08M23	SPRING, TENSION RESORTE DE TENSION			1	1		
54	90508–12015	SPRING, TORSION RESORTE DE TORSION			1	1		

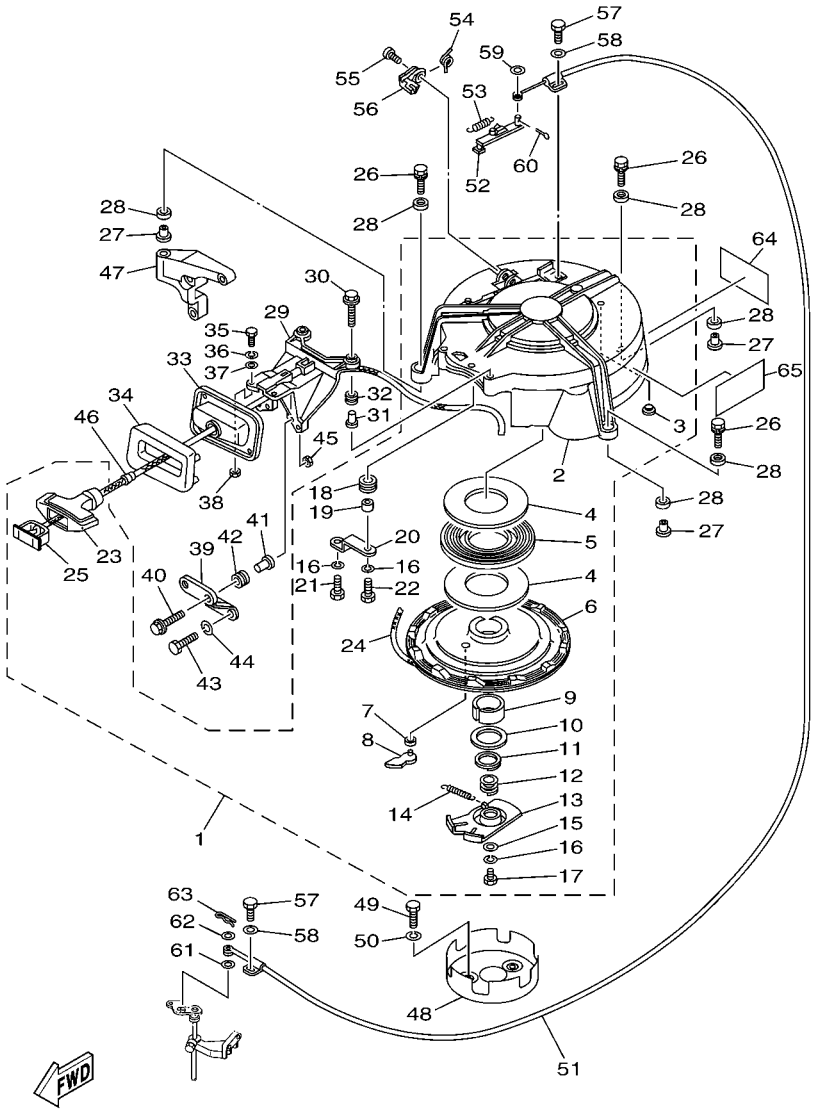

61U3200-C130

*1:CUT FROM 50M ROLLS,PART NO.90890-44374,CUTTING LENGTH 2.3M

*1:CORTE DE UN RODILLO DE 50M , PARTS NUMERO 90890-44374, LARGO DEL CORTE 2.3M

FIG. 13 STARTER ARRANQUE

REF. NO.	PART NO. CODIGO Nº	DESCRIPTION DESCRIPCION	ET	E	WH	MH		REMARKS OBSERVACIONES
55	90149–05095	SCREW TORNILLO DE REGLAJE			1	1		
56	663–15794–00	STOPPER TOPE			1	1		
57	97095–06010	BOLT PERNO			2	2		
58	92995–06600	WASHER ARANDELA			2	2		
59	92990–06200	WASHER, PLAIN ARANDELA PLANA			1	1		
60	91490–16012	PIN, COTTER CHAVETA			1	1		
61	90202–06009	WASHER, PLATE ARANDELA DE PLANA			1	1		
62	92990–06200	WASHER, PLAIN ARANDELA PLANA			1	1		
63	90468–18008	CLIP PRESILLA			1	1		
64	61U–2415A–00	LABEL, CAUTION ETIQUETA DE PRECAUCION			1	1		
65	61U–14488–00	LABEL, CAUTION ETIQUETA PRECAUCION			1	1		

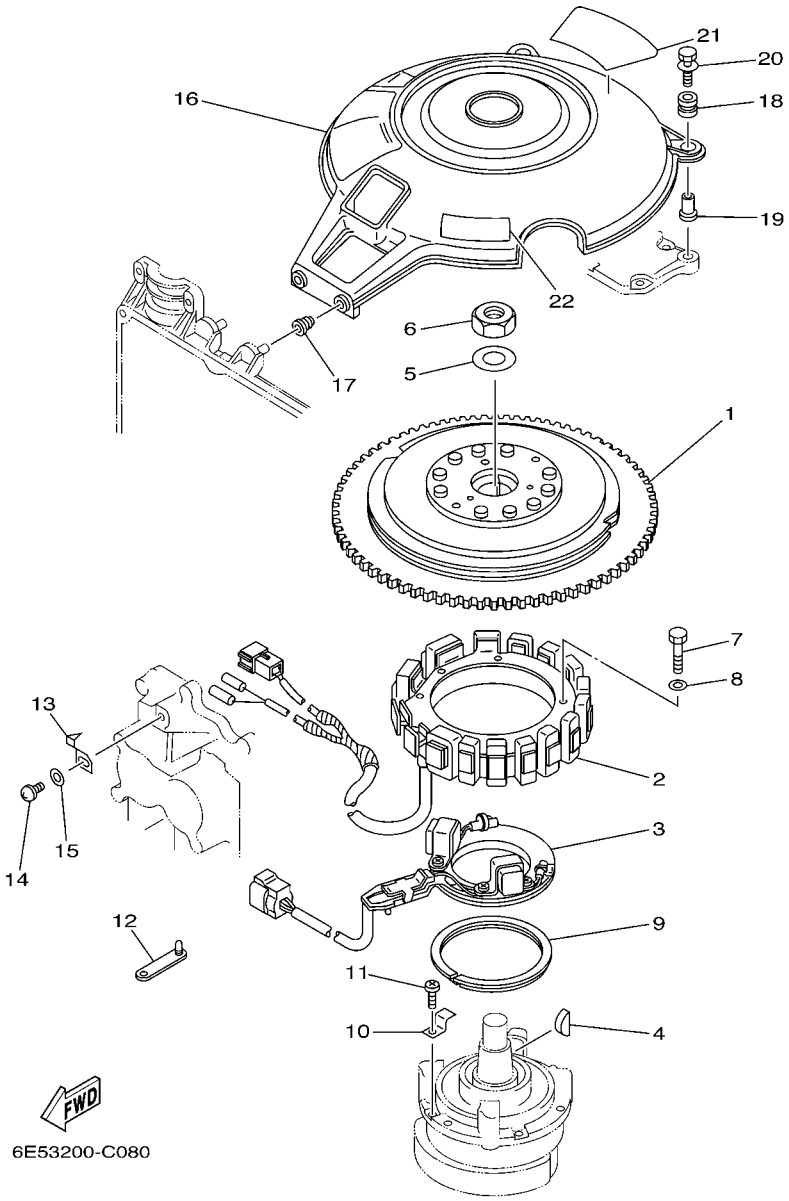

FIG. 14 GENERATOR GENERADOR

REF. NO.	PART NO. CODIGO Nº	DESCRIPTION DESCRIPCION	ET	E	WH	MH		REMARKS OBSERVACIONES
1	6E5–85550–00	ROTOR ASSY ROTOR COMPLETO	1	1	1	1		
2	6E5–85510–01	STATOR ASSY ESTATOR COMPLET	1	1	1	1		
3	6E5–85580–00	COIL, PULSER BOBINA DE PULSACION	1	1	1	1		
4	90280–05015	KEY, WOODRUFF CUNA WOODRUFF	1	1	1	1		
5	90201–21M18	WASHER, PLATE ARANDELA PLANA	1	1	1	1		
6	90170–20137	NUT TUERCA	1	1	1	1		
7	97013–06060	BOLT PERNO	3	3	3	3		
8	92903–06600	WASHER, PLATE RONDANA SENCILLA	3	3	3	3		
9	688–41611–00	RETAINER, MAGNETO BASE RETENEDOR BASE MAGNETO	1	1	1	1		
10	688–41612–00	RETAINER, MAGNETO BASE RETENEDOR BASE MAGNETO	4	4	4	4		
11	97880–06018	SCREW, PAN HEAD TORNILLO DE CABEZA CON PLANA	4	4	4	4		
12	90464–12M00	CLAMP BRIDA	1	1	1	1		
13	6E5–81332–00	PLATE, TIMING PLACA REGULADOR DE TIEMPO	1	1	1	1		
14	97885–06010	SCREW, PAN HEAD TORNILLO A MUESCA	1	1	1	1		
15	92995–06600	WASHER ARANDELA	1	1	1	1		
16	6E5–81337–01	COVER, FLYWHEEL CUBIERTA DE VOLANTE	1	1				
17	6G5–82317–00	DAMPER, IGNITION COIL AMORTIGUADOR BOBINA ENCENDIDO	2	2				
18	6A0–82317–00	DAMPER, IGNITION COIL AMORTIGUADOR BOBINA ENCENDIDO	2	2				
19	624–42542–00	PIPE TUBO	2	2				
20	90119–06M65	BOLT, WITH WASHER TORNILLO CON ARANDELA	2	2				
21	6E5–14488–00	LABEL, CAUTION ETIQUETA PRECAUCION	1	1				
22	6A1–83625–41	MARK 5 MARCA 5	1	1	1	1		

FIG. 15 ELECTRICAL 1 — EQUIPO ELECTRICO 1

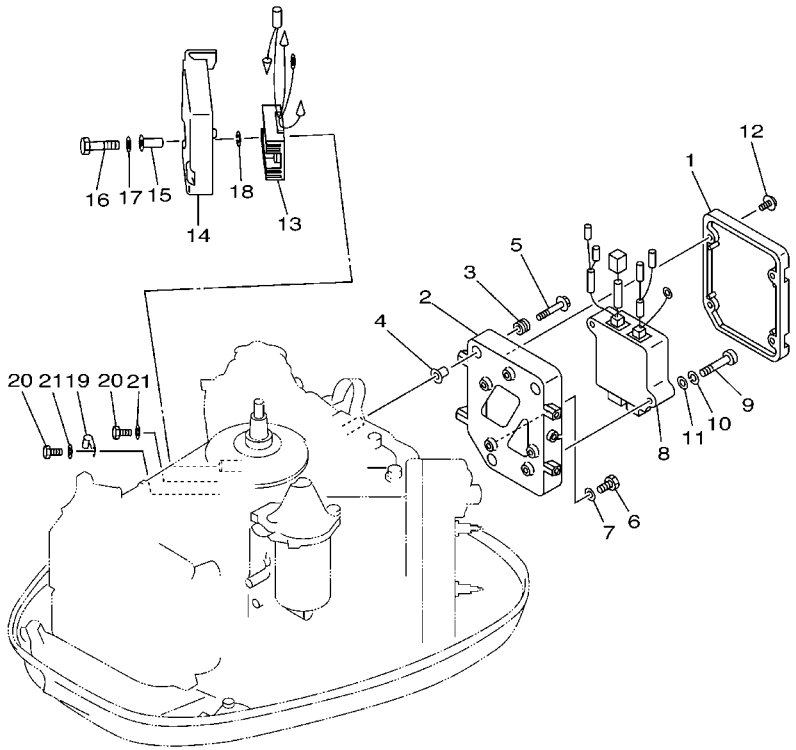

61U0200-0151

REF. NO.	PART NO. CODIGO Nº	DESCRIPTION DESCRIPCION	ET	E	WH	MH		REMARKS OBSERVACIONES
1	6N7–85537–00	COVER CUBIERTA	1	1	1	1		
2	6N7–85542–01–1S	BRACKET SOPORTE	1	1	1	1		
3	6A0–82317–00	DAMPER, IGNITION COIL AMORTIGUADOR BOBINA ENCENDIDO	3	3	3	3		
4	624–42542–00	PIPE TUBO	3	3	3	3		
5	90119–06M59	BOLT, WITH WASHER TORNILLO CON ARANDELA	3	3	3	3		
6	97095–06012	BOLT PERNO	1	1	1	1		
7	92995–06600	WASHER ARANDELA	1	1	1	1		
8	6E5–85540–00	C.D.I. UNIT ASSY UNIDAD C.D.I. COMPLETA	1	1	1	1		
9	97880–06040	SCREW, PAN HEAD TORNILLO DE CABEZA CON PLANA	2	2	2	2		
10	92990–06100	WASHER, SPRING ARANDELA PLANA	2	2	2	2		
11	92990–06600	WASHER, PLATE ARANDELA PLANA	2	2	2	2		
12	90159–06M11	SCREW, WITH WASHER TORNILLO CON VALONA	4	4	4	4		
13	6H0–81960–00	RECTIFIER & REGULATOR ASSY RECTIFICADOR Y REGULADOR	1	1	1	1		
14	6E5–81961–00	COVER CUBIERTA	1	1	1	1		
15	90387–06M77	COLLAR COLLAR	2	2	2	2		
16	97013–06045	BOLT PERNO	2	2	2	2		
17	92903–06600	WASHER, PLATE RONDANA SENCILLA	2	2	2	2		
18	90201–06M05	WASHER, PLATE ARANDELA PLANA	2	2	2	2		
19	90465–06M86	CLAMP BRIDA	1	1	1	1		
20	97095–06012	BOLT PERNO	2	2	2	2		
21	92995–06600	WASHER ARANDELA	2	2	2	2		

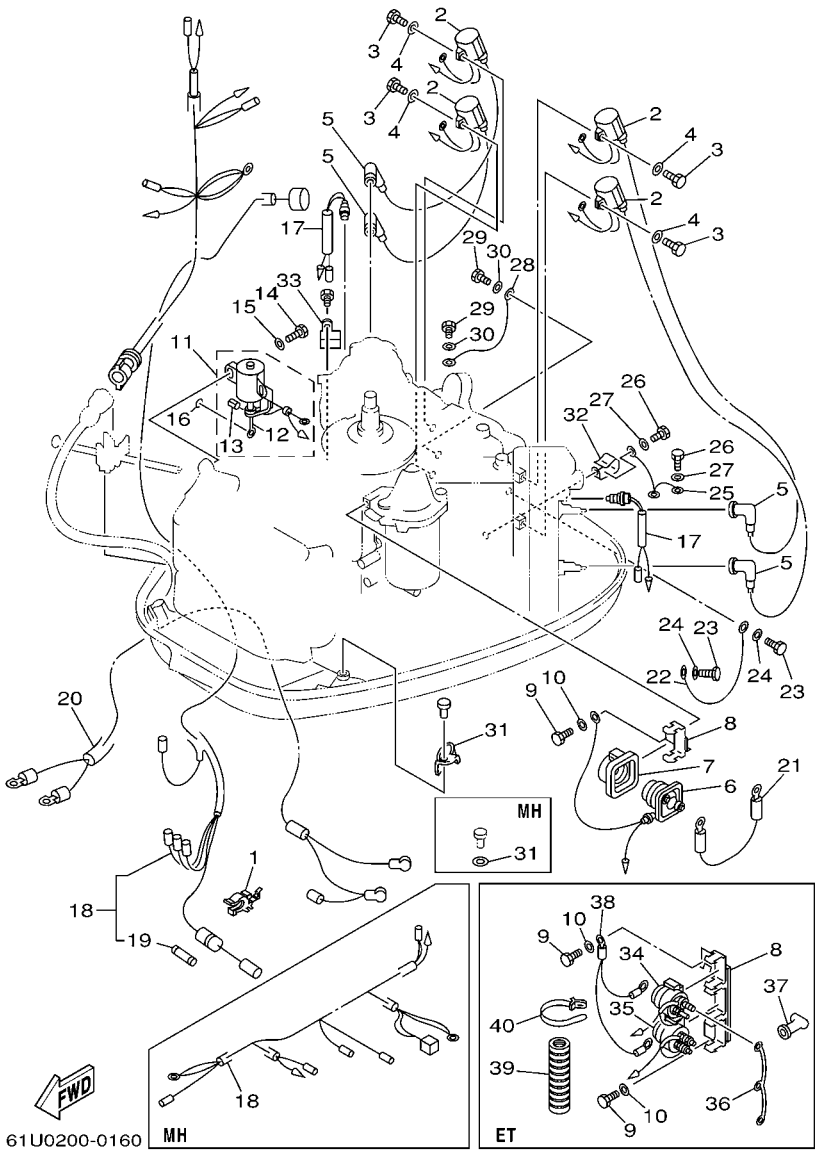

FIG. 16 ELECTRICAL 2 — EQUIPO ELECTRICO 2

REF. NO.	PART NO. CODIGO Nº	DESCRIPTION DESCRIPCION	ET	E	WH	MH		REMARKS OBSERVACIONES
1	6G5–82152–00	HOLDER, FUSE PORTA-FUSIBLES	1	1	1			
2	6R3–85570–01	IGNITION COIL ASSY BOBINA DE IGNICION COMPLETO	4	4	4	4		
3	97095–06020	BOLT PERNO	4	4	4	4		
4	92995–06600	WASHER ARANDELA	4	4	4	4		
5	663–82370–01	PLUG CAP ASSY TAPON DE BUJIA COMPLT	4	4	4	4		
	6G1–82370–21	PLUG CAP ASSY TAPON DE BUJIA COMPLT	4	4				CAR(EPA-CE/CE) CAR(EPA-CE/CE)
	6E3–82370–21	PLUG CAP ASSY TAPON DE BUJIA COMPLT	4					WITH HOUR METER WITH HOUR METER
6	61A–81941–00	STARTER RELAY ASSY RELE DE ARRANQUE	1	1	1			
7	689–81952–10	HOLDER, RELAY SOSTEN DE RELE	1	1	1			
8	6E5–81948–22	BRACKET SOPORTE	1					
	6E5–81948–10	BRACKET SOPORTE		1	1			
9	97095–06016	BOLT PERNO	2					
	97095–06016	BOLT PERNO		1	1			
10	92995–06600	WASHER ARANDELA	2					
	92995–06600	WASHER ARANDELA		1	1			
11	6E5–86110–02	SOLENOID SOLENOIDE	1	1				
12	6E5–86116–01	.WIRE, PULL .ALAMBRE-JALADOR	1	1				
13	91609–30010	.PIN, SPRING .PASADOR DE RESORTE	1	1				
14	97095–06016	BOLT PERNO	2	2				
15	92995–06600	WASHER ARANDELA	2	2				
16	93210–03261	O-RING ANILLO O	1	1				
17	688–82560–10	THERMO SWITCH ASSY INTER. DE TERMO	2	2	2	2		
18	6E5–82590–04	WIRE HARNESS ASSY CONJUNTO DE CABLES	1	1	1			
	61U–82590–M1	WIRE HARNESS ASSY CONJUNTO DE CABLES				1		
	6E5–82590–20	WIRE HARNESS ASSY CONJUNTO DE CABLES	1					WITH HOUR METER WITH HOUR METER
19	663–82151–00	.FUSE (12V-20A) .FUSIBLE (12V-20A)	1	1	1			
20	61U–82105–01	WIRE HARNESS ARNES DE CABLES	1	1	1			

FIG. 16 ELECTRICAL 2 — EQUIPO ELECTRICO 2

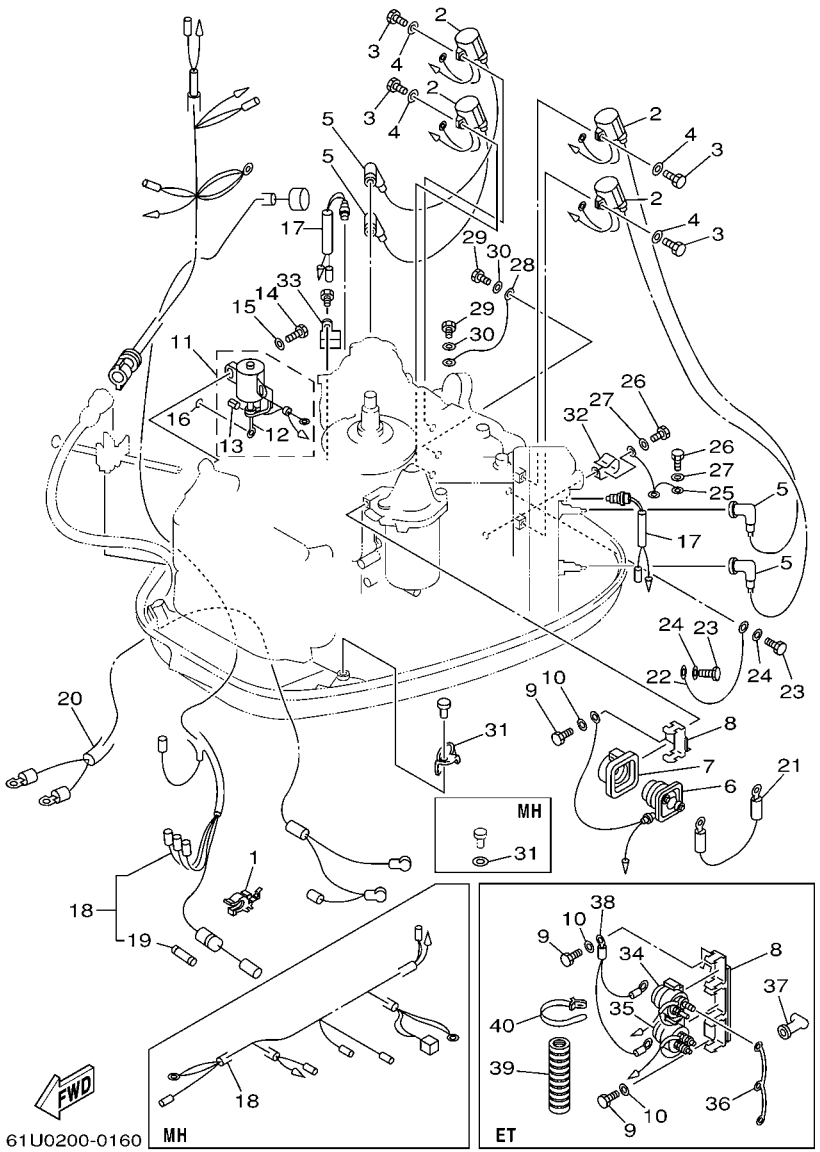

REF. NO.	PART NO. CODIGO Nº	DESCRIPTION DESCRIPCION	ET	E	WH	MH		REMARKS OBSERVACIONES
21	6E5–82117–01	WIRE, LEAD CABLE CONDUCTOR	1	1	1			
22	6R3–82519–00	WIRE, EARTH LEAD CABLE CONDUCTOR A TIERRA	1	1	1	1		
23	97095–06012	BOLT PERNO	2	2	2	2		
24	92995–06600	WASHER ARANDELA	2	2	2	2		
25	6E5–82531–10	WIRE, LEAD CABLE CONDUCTOR	1	1	1	1		
26	97095–06012	BOLT PERNO	2	2	2	2		
27	92995–06600	WASHER ARANDELA	2	2	2	2		
28	662–82519–00	WIRE, EARTH LEAD CABLE CONDUCTOR A TIERRA	1	1	1	1		
29	97095–06012	BOLT PERNO	2	2	2	2		
30	92995–06600	WASHER ARANDELA	2	2	2	2		
31	90465–12M25	CLAMP BRIDA	1	1	1			
	92995–06200	WASHER ARANDELA				1		
32	90465–05M87	CLAMP BRIDA	1	1	1	1		
33	90465–08M89	CLAMP BRIDA	1	1	1	1		
34	6E5–81950–00	RELAY ASSY RELE COMPLETO	1					
35	6E5–8195A–00	RELAY ASSY RELE COMPLETO	1					
36	6G5–87149–10	CONNECTOR CONECTOR	1					
37	6G5–82119–00	COVER, LEAD WIRE CUBIERTA DE CABLE CONDUCTOR	2					
38	6E5–82116–00	WIRE, MINUS LEAD CABLE CONDUCTOR NEGATIVO	1					
39	6N7–83557–00	TUBE (I.DIA:22MM) ENCHUFE DE ACEITE (I.DIA:22MM)	1					
40	90465–13M18	CLAMP BRIDA	1					

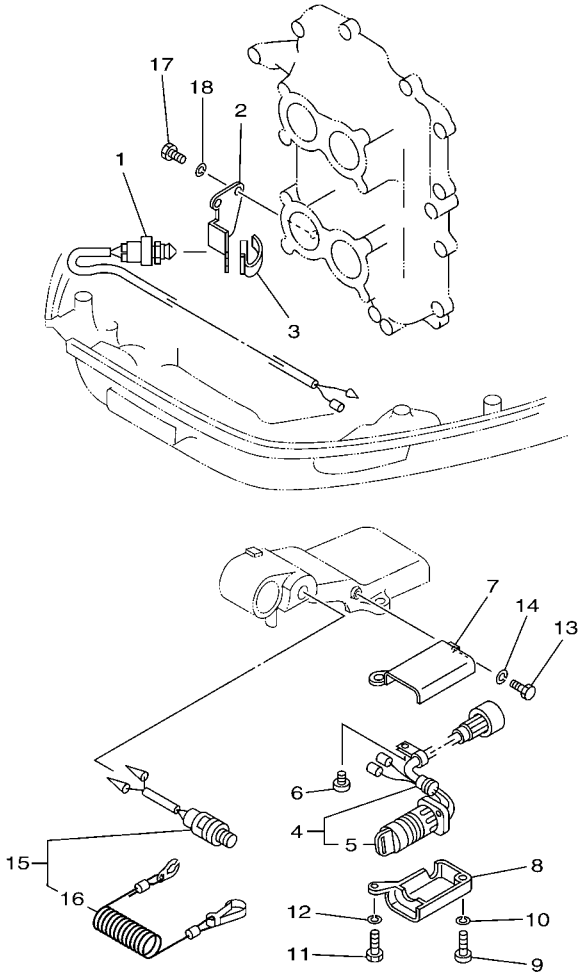

61U3200-C170

FIG. 17 ELECTRICAL 3 — EQUIPO ELECTRICO 3

REF. NO.	PART NO. CODIGO Nº	DESCRIPTION DESCRIPCION	ET	E	WH	MH		REMARKS OBSERVACIONES
1	688–82540–11	NEUTRAL SWITCH ASSY INTERRUPTOR NEUTRAL COMPL			1			
2	6E5–82554–00	STAY, NEUTRAL SWITCH SOPORTE INTERRUPTOR DE NEUTRAL			1			
3	663–82555–01	DAMPER, MAIN SWITCH 1 AMORT.DE INTER.PPAL.1			1			
4	63D–82510–20	MAIN SWITCH ASSY CONJUNTO DE LLAVE IGNICION			1			
5	676–82577–00	.CAP, KEY .TAPA			1			
6	97885–06012	SCREW, PAN HEAD TORNILLO A MUESCA			1			
7	697–8252E–02–4D	COVER, MAIN SWITCH 1 CUBIELA INTERRUPTOR PRINC.1			1			
8	697–8252F–02–4D	COVER, MAIN SWITCH 2 CUBIELA INTERRUPTOR PRINC.2			1			
9	97880–06025	SCREW, PAN HEAD TORNILLO DE CABEZA CON PLANA			1			
10	92990–06100	WASHER, SPRING ARANDELA PLANA			1			
11	97013–06030	BOLT PERNO			1			
12	92903–06100	WASHER, SPRING RONDANA SENCILLA			1			
13	97013–06020	BOLT PERNO			1			
14	92903–06100	WASHER, SPRING RONDANA SENCILLA			1			
15	688–82575–10	ENGINE STOP SWITCH ASSY INTERRUPTOR DE PARADA COMPL			1			
16	682–82556–00	.STOPPER .RETENER			1			
17	97095–06016	BOLT PERNO			2			
18	92995–06100	WASHER, SPRING ARANDELA			2			

FIG. 18 ELECTRICAL 4 — EQUIPO ELECTRICO 4

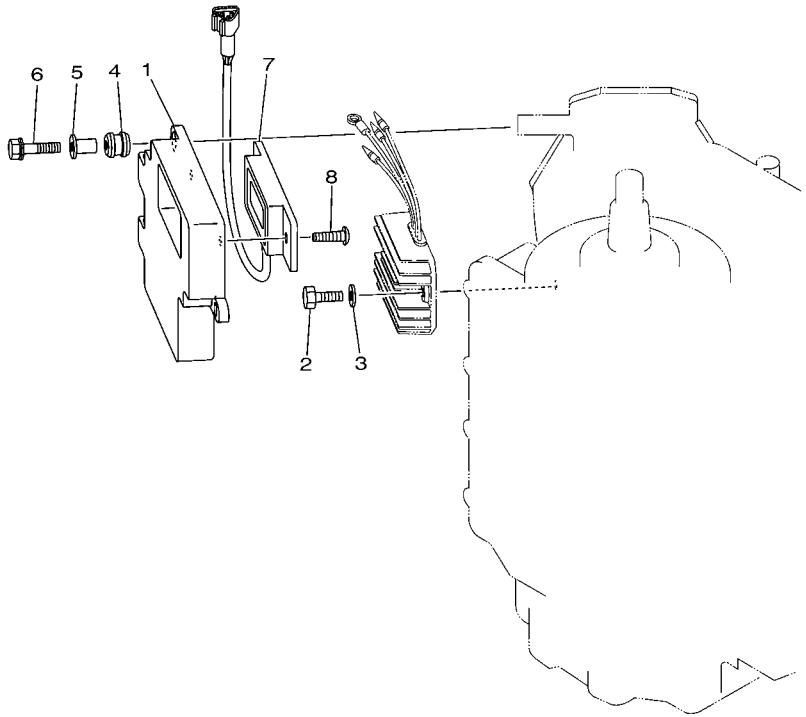

61U3200-C180

REF. NO.	PART NO. CODIGO Nº	DESCRIPTION DESCRIPCION	ET	E	WH	MH		REMARKS OBSERVACIONES
1	61U–83519–00	BRACKET, METER SOPORTE DE MEDIDOR	1					
2	97013–06020	BOLT PERNO	2					
3	92903–06600	WASHER, PLATE RONDANA SENCILLA	2					
4	6A0–82317–00	DAMPER, IGNITION COIL AMORTIGUADOR BOBINA ENCENDIDO	2					
5	624–42542–00	PIPE TUBO	2					
6	90119–06M65	BOLT, WITH WASHER TORNILLO CON ARANDELA	2					
7	6Y5–83504–20	HOUR METER ASSY MEDIDOR DE HORAS COMPLETO	1					
8	90169–05M00	SCREW, TRUSS HEAD TAPPING TORNILLO	2					

FIG. 19 STARTING MOTOR — MOTOR DE ARRANQUE

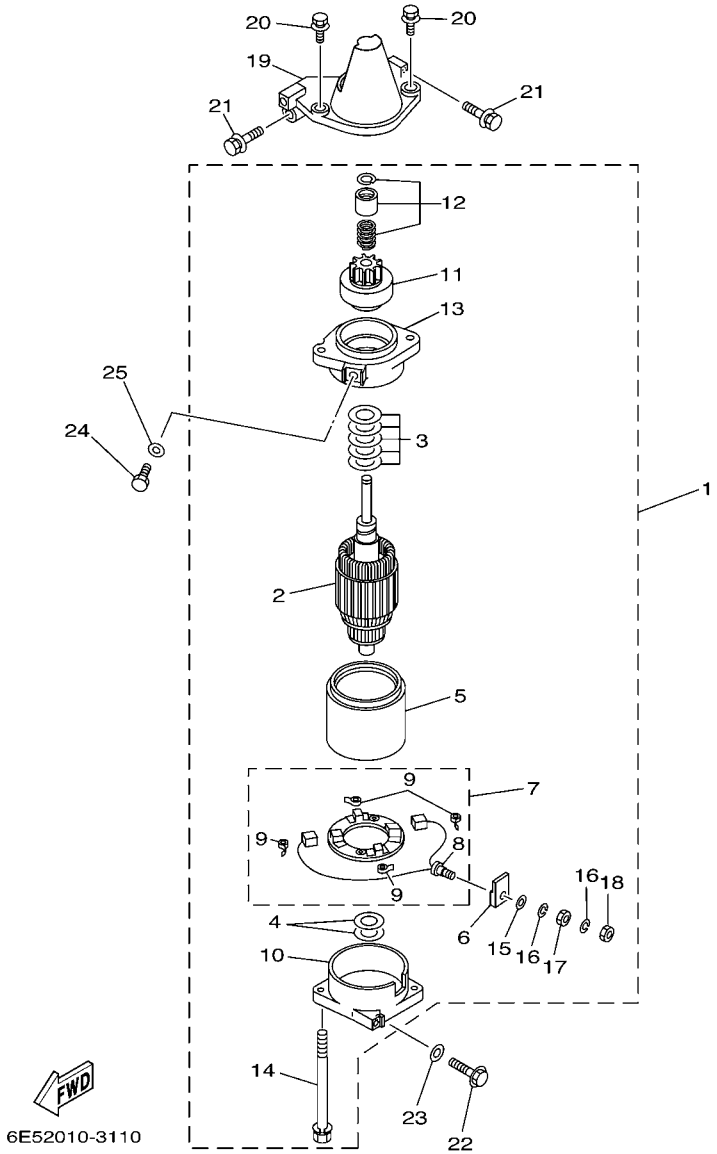

REF. NO.	PART NO. CODIGO Nº	DESCRIPTION DESCRIPCION	ET	E	WH	MH		REMARKS OBSERVACIONES
1	6N7–81800–10	STARTING MOTOR ASSY MOTOR DE ARRANQUE COMPLETO	1	1	1			
2	6N7–81850–10	.ARMATURE ASSY .INDUCIDO COMPLETO	1	1	1			
3	61A–81809–00	.WASHER KIT .JUEGO DE ARANDELA	1	1	1			
4	61A–81824–00	.WASHER 2 .ARANDELA 2	2	2	2			
5	6N7–81810–00	.STATOR ASSY .ESTATOR COMPLETO	1	1	1			
6	6K7–8182G–10	.BUSH, TERMINAL .BUJE DE TERMINAL	1	1	1			
7	6N7–81840–00	.BRUSH HOLDER ASSY .SOSTEN DE ESCOBILLA COMPLETO	1	1	1			
8	6N7–81801–00	..BRUSH SET ..JUEGO DE ESCOBILLA	1	1	1			
9	6N7–81813–00	..SPRING, BRUSH ..RESORTE DE ESCOBILLA	4	4	4			
10	6N7–81820–10	.REAR BRACKET ASSY .CUBIERTA TRASERA COMPL	1	1	1			
11	6N7–81807–00	.GEAR ASSY, STARTING MOTOR .PINON CONJUNTO	1	1	1			
12	6N7–81857–00	.RETAINER .SEGURO	1	1	1			
13	6N7–81830–00	.FRONT BRACKET ASSY .SOPORTE DELANTERO COMPLETO	1	1	1			
14	6K7–81826–10	.BOLT .PERNO	2	2	2			
15	6E5–8182E–10	.WASHER .RONDANA	1	1	1			
16	6E5–8182F–10	.WASHER .RONDANA	2	2	2			
17	6E5–8182A–10	.NUT .TUERCA	1	1	1			
18	6E5–8182K–10	.NUT .TUERCA	1	1	1			
19	6E5–81822–02–98	BRACKET, STARTING MOTOR SOPORTE DE MOTOR DE ARRANQUE	1	1	1	1		
20	90119–08M76	BOLT, WITH WASHER TORNILLO CON ARANDELA	2	2	2			
21	90119–08M77	BOLT, WITH WASHER TORNILLO CON ARANDELA	2	2	2	2		
22	90119–08M57	BOLT, WITH WASHER TORNILLO CON ARANDELA	1	1	1			
23	92990–08600	WASHER, PLATE ARANDELA PLANA	1	1	1			
24	97095–08016	BOLT PERNO	1	1	1			
25	92995–08600	WASHER ARANDELA	1	1	1			

FIG. 20 BOTTOM COWLING CUBIERTA INFERIOR

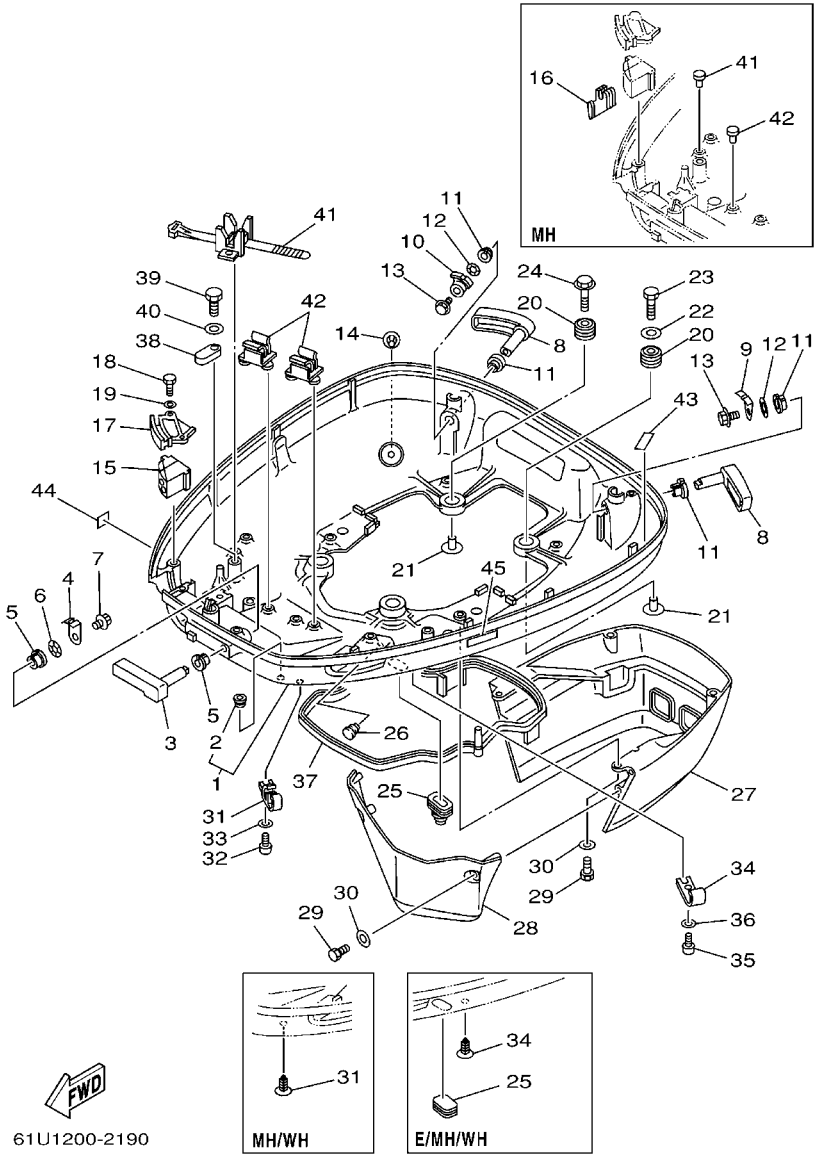

REF. NO.	PART NO. CODIGO Nº	DESCRIPTION DESCRIPCION	ET	E	WH	MH		REMARKS OBSERVACIONES
1	6E5–W4271–05–4D	COWLING, BOTTOM CUBIERTA INFERIOR	1	1				
	61U–W4271–02–4D	COWLING, BOTTOM CUBIERTA INFERIOR			1	1		
2	6H4–42748–00	.GROMMET .TAPON	1	1	1	1		
3	688–42815–01–8D	LEVER, CLAMP PALANCA ABRAZADERA	1	1	1	1		
4	688–42816–00	LEVER, CLAMP PALANCA ABRAZADERA	1	1	1	1		
5	90386–13M38	BUSH BUJE	2	2	2	2		
6	90206–13M10	WASHER, WAVE ARANDELA ONDULADA	1	1	1	1		
7	90119–06M09	BOLT, WITH WASHER TORNILLO CON ARANDELA	1	1	1	1		
8	6E5–42817–01–4D	LEVER, CLAMP PALANCA ABRAZADERA	2	2	2	2		
9	6G5–42816–00	LEVER, CLAMP PALANCA ABRAZADERA	1	1	1	1		
10	6E5–42816–01	LEVER, CLAMP PALANCA ABRAZADERA	1	1	1	1		
11	90386–13M38	BUSH BUJE	4	4	4	4		
12	90206–13M10	WASHER, WAVE ARANDELA ONDULADA	2	2	2	2		
13	90119–06M09	BOLT, WITH WASHER TORNILLO CON ARANDELA	2	2	2	2		
14	6E5–44391–00	NIPPLE, HOSE NIPLE MANGUERA	1	1	1	1		
15	6E5–42725–00	GROMMET TAPON	1	1	1	1		
16	61U–42725–00	GROMMET TAPON				1		
17	6E5–42738–01–5B	PLATE, FITTING PLACA DE AJUSTE	1	1	1	1		
18	97095–06016	BOLT PERNO	2	2	2	2		
19	92995–06600	WASHER ARANDELA	2	2	2	2		
20	90480–22M15	GROMMET TAPON	4	4	4	4		
21	90387–08M37	COLLAR COLLAR	4	4	4	4		
22	90201–08M54	WASHER, PLATE ARANDELA PLANA	1	1	1	1		
23	97075–08035	BOLT PERNO	1	1	1	1		
24	90119–08M22	BOLT, WITH WASHER TORNILLO CON ARANDELA	3	3	3	3		
25	688–42726–10	GROMMET TAPON	1					
	6H4–42726–00	GROMMET TAPON		1	1	1		

FIG. 20 BOTTOM COWLING CUBIERTA INFERIOR

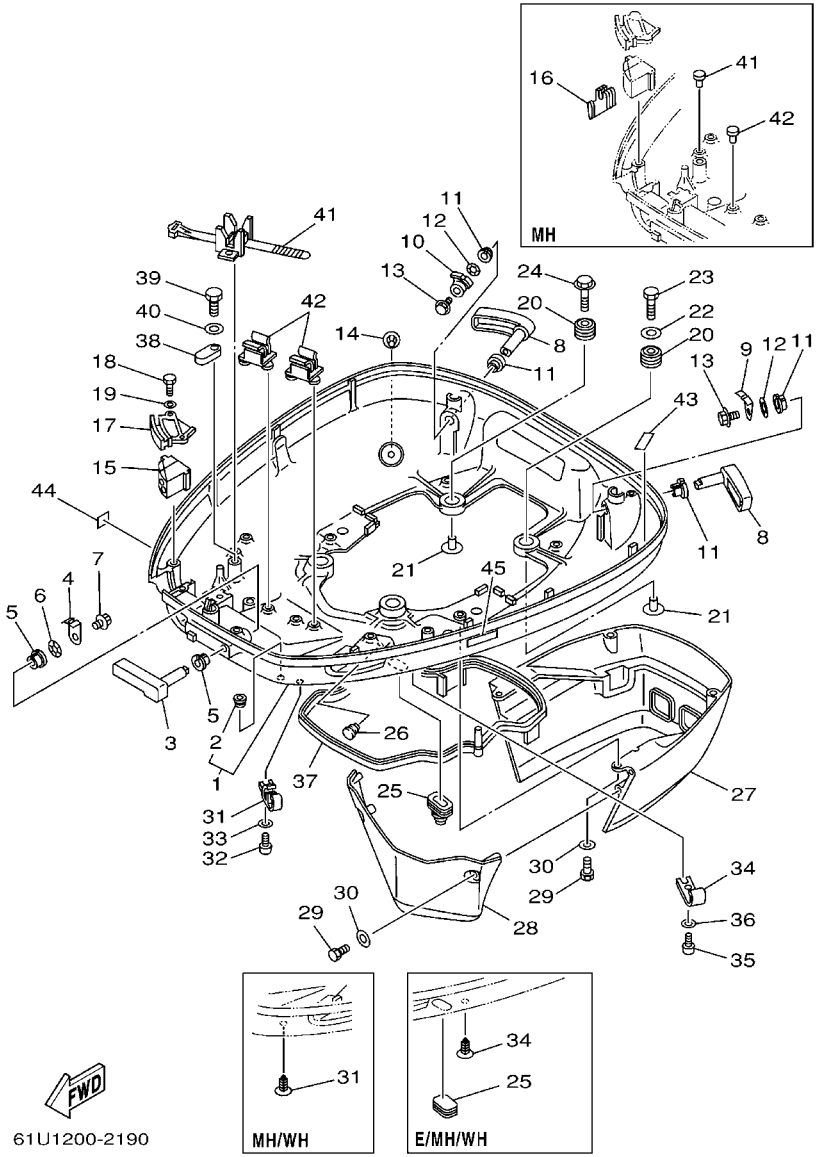

REF. NO.	PART NO. CODIGO Nº	DESCRIPTION DESCRIPCION	ET	E	WH	MH		REMARKS OBSERVACIONES
26	90480–10M36	GROMMET TAPON	1	1	1	1		
27	6E5–42741–01–4D	APRON MANDIL	1	1	1	1		
28	6E5–42771–01–4D	APRON MANDIL	1	1	1	1		
29	97095–06020	BOLT PERNO	6	6	6	6		
30	92995–06600	WASHER ARANDELA	6	6	6	6		
31	6E5–24367–01	CLAMP, FUEL PIPE 2 GRAMPA DE TUBO DE COMBUST.2	2	2				
	90338–05M03	PLUG TAPON			2	2		
32	90157–06M01	SCREW, PAN HEAD TORNILLO CABEZA CONICA PLANA	2	2				
33	92990–06600	WASHER, PLATE ARANDELA PLANA	2	2				
34	6E5–24367–10	CLAMP, FUEL PIPE 2 GRAMPA DE TUBO DE COMBUST.2	1					
	90338–05M03	PLUG TAPON		1	1	1		
35	90157–06M01	SCREW, PAN HEAD TORNILLO CABEZA CONICA PLANA	1					
36	92990–06600	WASHER, PLATE ARANDELA PLANA	1					
37	6E5–42716–00	RUBBER, SEAL 1 SELLO DE GOMA 1	1	1	1	1		
38	6E5–82588–00	PLATE PLACA	1	1	1	1		
39	97095–06020	BOLT PERNO	1	1	1	1		
40	92995–06600	WASHER ARANDELA	1	1	1	1		
41	688–82594–00	CLAMP GRAMPA	1	1	1			
	703–82119–00	COVER, LEAD WIRE CUBIERTA DE CABLE CONDUCTOR				2		
42	6E5–82594–00	CLAMP GRAMPA	2	2	2			
	689–85547–00	DAMPER AMORTIGUADOR				4		
43	6G5–42791–00	MARK 1 MARCA 1	1	1	1	1		
	6G5–42791–10	MARK 1 MARCA 1	1	1				CHN,CAR(EPA-CE/CE) CHN,CAR(EPA-CE/CE)
44	6A1–28176–00	LABEL, CAUTION ETIQUETA DE PRECAUCION	1	1				CAR(EPA-CE/CE) CAR(EPA-CE/CE)
45	6E3–8257H–00	PLATE, MARK PLACA DE MARCA	1	1				CAR(EPA-CE/CE) CAR(EPA-CE/CE)

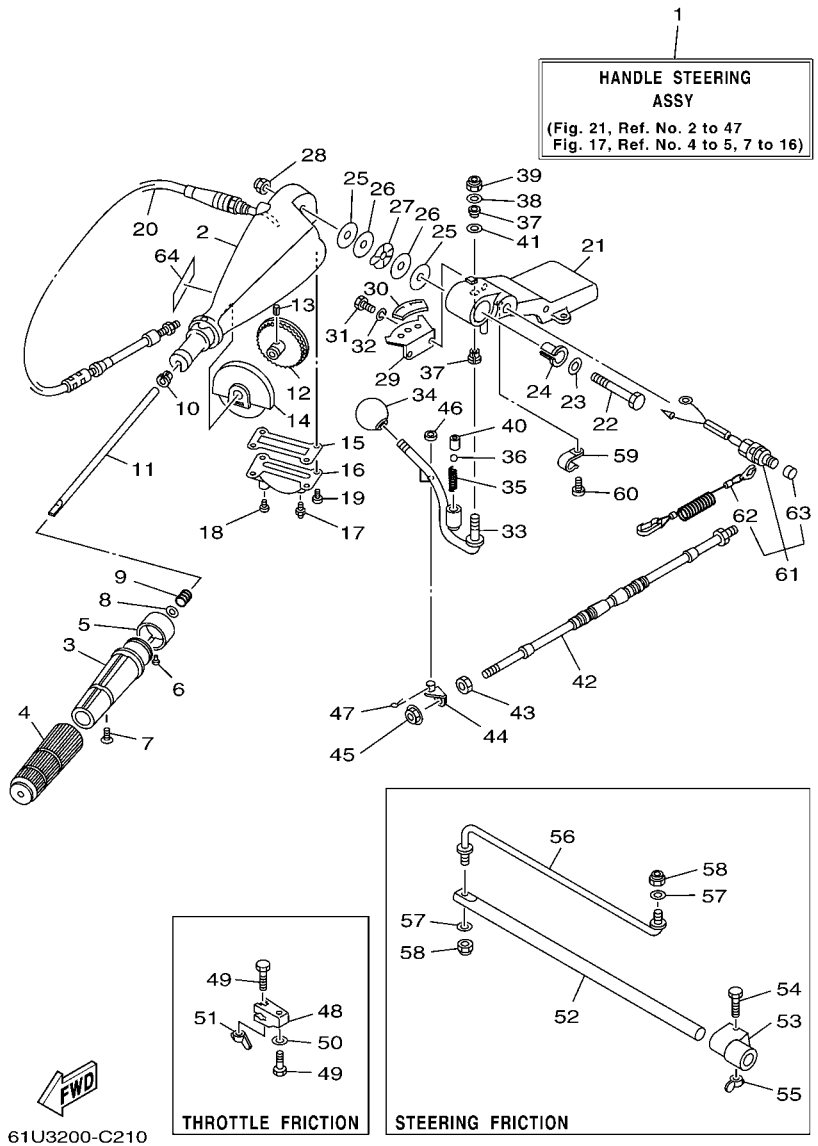

FIG. 21 STEERING — DIRECCION

REF. NO.	PART NO. CODIGO Nº	DESCRIPTION DESCRIPCION	ET	E	WH	MH		REMARKS OBSERVACIONES
1	6E5–W0084–14–4D	HANDLE STEERING ASSY CONJUNTO DE MANIJA			1	1		
2	692–42111–12–4D	HANDLE, STEERING MANIJA DE DIRECCION			1	1		
3	664–42119–00	GRIP, STEERING HANDLE MANGO, MANIJA DE DIRRECCION			1	1		
4	6F6–42177–A0	RUBBER, HANDLE HULE DE MANIJA			1	1		
5	6K5–42137–00	INDICATOR, THROTTLE INDICADOR ACELERADOR			1	1		
6	90269–02M09	RIVET REMACHE			1	1		
7	90149–05M13	SCREW TORNILLO DE REGLAJE			1	1		
8	92903–10600	WASHER, PLATE RONDANA SENCILLA			1	1		
9	90501–23215	SPRING, COMPRESSION RESORTE DE COMPRESION			1	1		
10	90386–08032	BUSH BUJE			1	1		
11	692–42115–00	SHAFT, STEERING HANDLE EJE MANIJA DE DIRECCION			1	1		
12	663–42138–00	LEVER, THROTTLE PLANCA DE ACELERACION			1	1		
13	90254–03003	PIN, SPRING PASADOR DE TIPO A RESORTE			1	1		
14	692–42135–00	HOUSING, THROTTLE LEVER CAJA PALANCA ACELERADOR			1	1		
15	663–42133–01	GASKET EMPAQUE			1	1		
16	692–42134–03–94	COVER, THROTTLE LEVER CUBIERTA PALANCA ACELERADOR			1	1		
17	93700–06M03	NIPPLE, GREASE BOQUILLA DE ENGRASAR			1	1		
18	97885–06008	SCREW, PAN HEAD TORNILLO A MUESCA			1	1		
19	97885–05012	SCREW, PAN HEAD TORNILLO A MUESCA			4	4		
20	692–26301–03	THROTTLE CABLE ASSY CABLE DE ACELERADOR COMPLETO			1	1		
21	692–42121–02–4D	BRACKET SOPORTE			1	1		
22	90101–12M06	BOLT TORNILLO			1	1		
23	92990–12200	WASHER, PLAIN ARANDELA PLANA			1	1		
24	90386–12089	BUSH BUJE			1	1		
25	90202–12092	WASHER, PLATE ARANDELA DE PLANA			2	2		
26	90201–12537	WASHER, PLATE ARANDELA PLANA			2	2		
27	90206–12054	WASHER, WAVE ARANDELA ONDULADA			1	1		

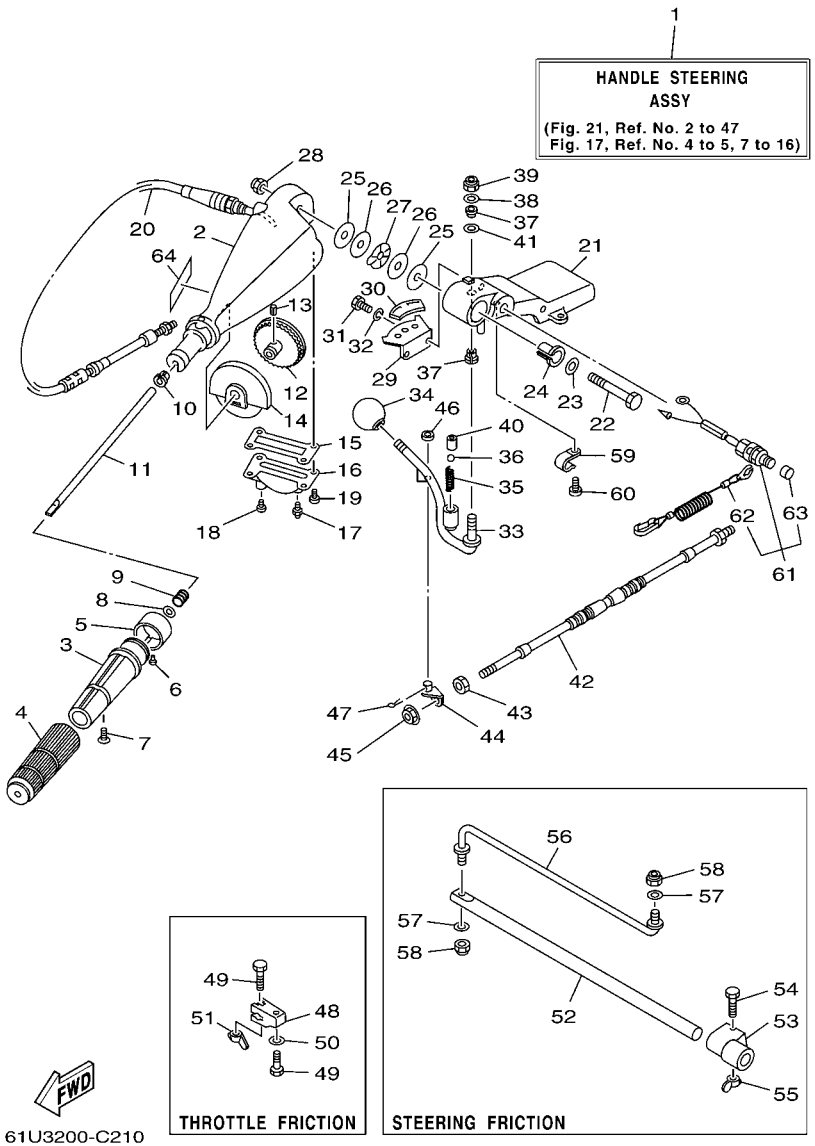

FIG. 21 STEERING — DIRECCION

REF. NO.	PART NO. CODIGO Nº	DESCRIPTION DESCRIPCION	ET	E	WH	MH		REMARKS OBSERVACIONES
28	90185–12058	NUT, SELF-LOCKING TUERCA AUTOBLOCANTE			1	1		
29	697–44113–00	CAM PLATE, HANDLE PLACA DE LA LEVA DEL MANGO			1	1		
30	6K5–44191–00	INDICATOR, SHIFT INDICADOR DE CAMBIOS			1	1		
31	97013–06016	BOLT PERNO			2	2		
32	92903–06100	WASHER, SPRING RONDANA SENCILLA			2	2		
33	692–44159–01	HANDLE, GEAR SHIFT MANIJA DE CAMBIO DE MARCHAS			1	1		
34	663–44173–00	LEVER, SHIFT CONTROL PALANCA CONTROL CAMBIOS			1	1		
35	90501–16M17	SPRING, COMPRESSION RESORTE DE COMPRESION			1	1		
36	93515–32M01	BALL ESFERA			1	1		
37	90386–10009	BUSH BUJE			2	2		
38	90201–10120	WASHER, PLATE ARANDELA PLANA			1	1		
39	90185–10051	NUT, SELF-LOCKING TUERCA AUTOBLOCANTE			1	1		
40	90387–12M30	COLLAR COLLAR			1	1		
41	90201–12M34	WASHER, PLATE ARANDELA PLANA			1	1		
42	6E5–48310–01	CABLE, REMOTE CONTROL CABLE CONTROL REMOTO			1	1		
43	95380–05600	NUT TUERCA			1	1		
44	6E5–44124–00	LINK, SHIFT ROD ESLABON			1	1		
45	95780–05300	NUT, NYLON TUERCA			1	1		
46	92990–06600	WASHER, PLATE ARANDELA PLANA			1	1		
47	91490–25012	PIN, COTTER CHAVETA			1	1		
48	663–42126–01	FRICTION, STEERING HANDLE GRIP FRICCION DE MANGO DIRECCION			1	1		
49	90101–06M27	BOLT TORNILLO			2	2		
50	92990–06600	WASHER, PLATE ARANDELA PLANA			1	1		
51	90175–06003	NUT, WING TUERCA MARIPOSA			1	1		
52	6E5–42518–01	SHAFT, FRICTION EJE FRICCION			1	1		
53	663–42528–00	PLATE, FRICTION PIEZA DE FRICCION			1	1		
54	97080–06035	BOLT PERNO			1	1		

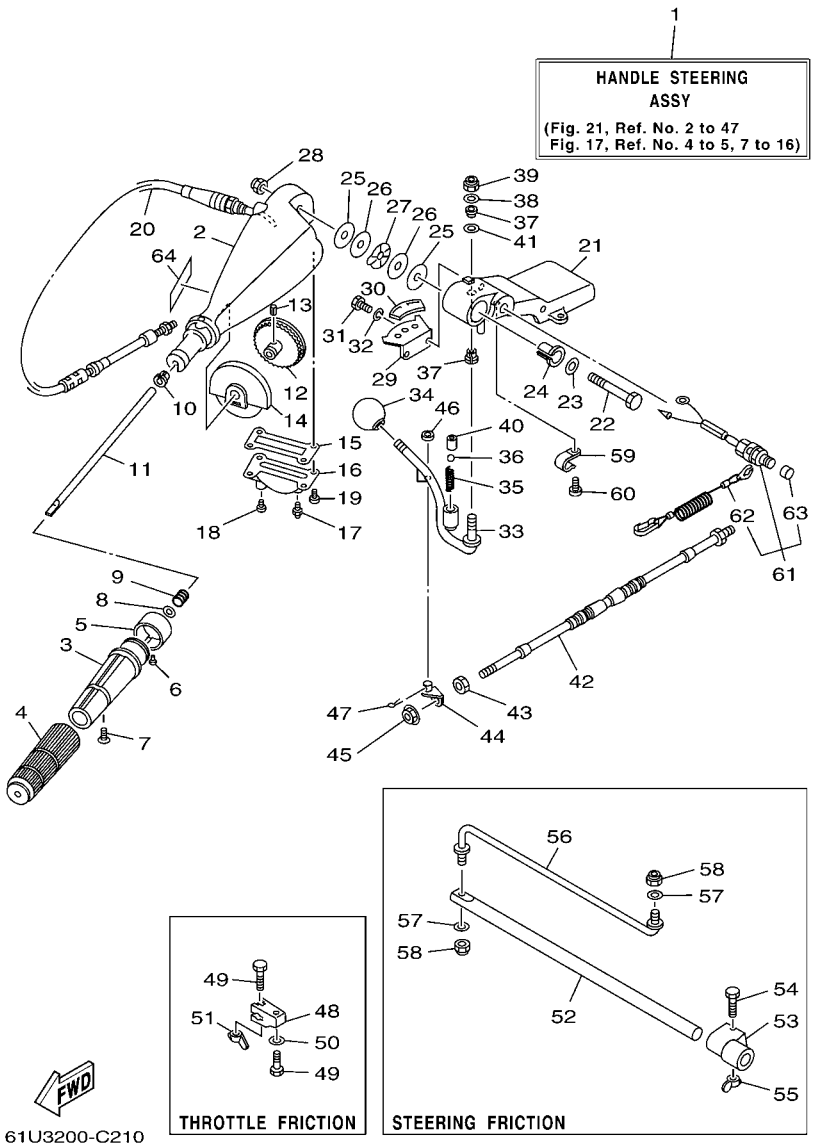

FIG. 21 STEERING DIRECCION

REF. NO.	PART NO. CODIGO Nº	DESCRIPTION DESCRIPCION	ET	E	WH	MH		REMARKS OBSERVACIONES
55	90175–06003	NUT, WING TUERCA MARIPOSA			1	1		
56	6E5–42515–00	ROD, STEERING LINK VARILLA ESLABON DIRECCION			1	1		
57	92995–08600	WASHER ARANDELA			2	2		
58	90185–08057	NUT, SELF-LOCKING TUERCA AUTOBLOCANTE			2	2		
59	90465–06M90	CLAMP BRIDA				1		
60	97885–06012	SCREW, PAN HEAD TORNILLO A MUESCA				1		
61	697–82575–00	ENGINE STOP SWITCH ASSY INTERRUPTOR DE PARADA COMPL				1		
62	682–82556–00	.STOPPER .RETENER				1		
63	689–8257Y–00	.CAP .CASQUILLO				1		
64	6E0–83627–41	LABEL, CAUTION 7 ETIQUETA DE PRECAUCION 7			1	1		

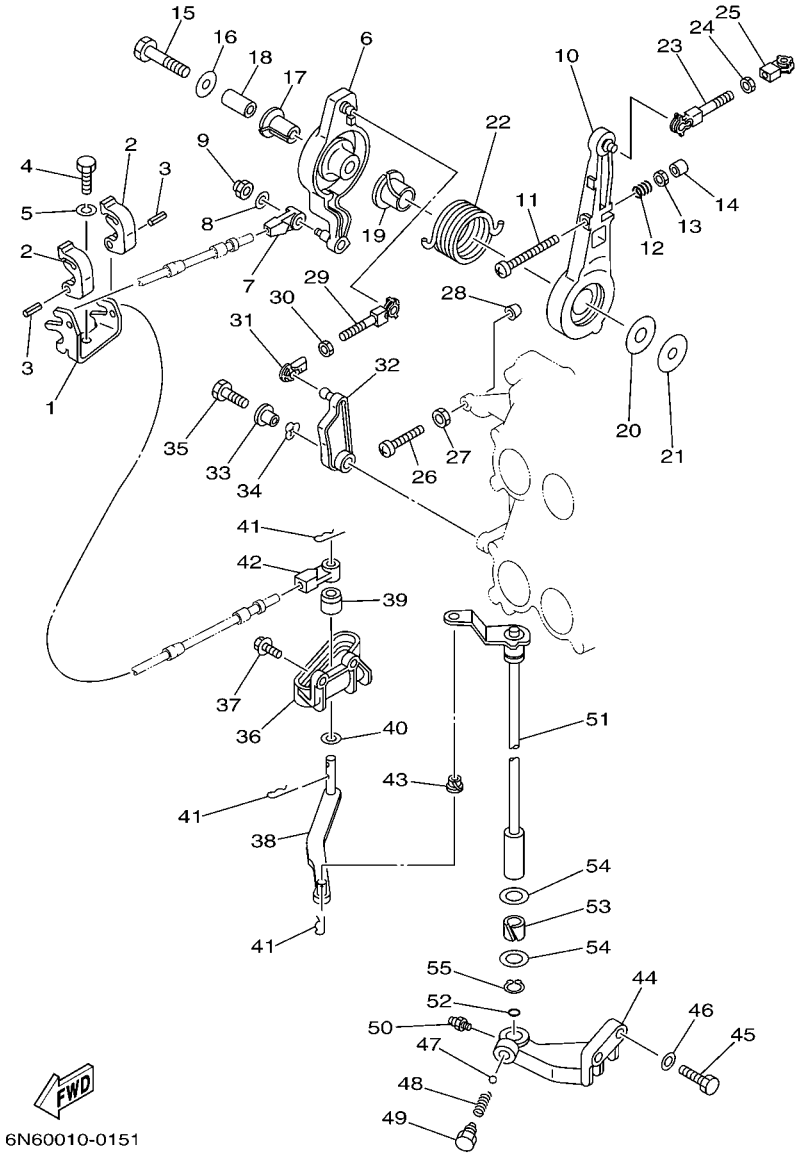

FIG. 22 CONTROL — CONTROL

REF. NO.	PART NO. CODIGO Nº	DESCRIPTION DESCRIPCION	ET	E	WH	MH		REMARKS OBSERVACIONES
1	6E5–48531–00	BRACKET, REMOTE CONTROL 1 SOPORTE DE CONTROL REMOTO	1	1	1	1		
2	6E5–48538–00	CLAMP, CABLE GRAMPA DE CABLE	2	2	2	2		
3	91690–30012	PIN, SPRING PASADOR DE RESORTE	2	2	2	2		
4	97095–08020	BOLT PERNO	1	1	1	1		
5	92995–08100	WASHER ARANDELA	1	1	1	1		
6	6E5–41632–02–1S	LEVER, MAGNETO CONTROL PALANCA DE CONTROL DE MAGNETO	1	1	1	1		
7	6E5–48344–00	CABLE END, REMOTE CONTROL BASE CONTROL	1	1	1	1		
8	92990–06200	WASHER, PLAIN ARANDELA PLANA	1	1	1	1		
9	90185–06M07	NUT, SELF-LOCKING TUERCA AUTOBLOCANTE	1	1	1	1		
10	6E5–41631–01–1S	LEVER, MAGNETO CONTROL PALANCA DE CONTROL DE MAGNETO	1	1	1	1		
11	90157–06013	SCREW, PAN HEAD TORNILLO CABEZA CONICA PLANA	1	1	1	1		
12	90501–16M12	SPRING, COMPRESSION RESORTE DE COMPRESION	1	1	1	1		
13	95303–06600	NUT TUERCA	1	1	1	1		
14	688–44194–00	CAP TAPA	1	1	1	1		
15	97013–08045	BOLT PERNO	1	1	1	1		
16	90201–08M23	WASHER, PLATE ARANDELA PLANA	1	1	1	1		
17	90386–12089	BUSH BUJE	1	1	1	1		
18	90387–08M16	COLLAR COLLAR	1	1	1	1		
19	90386–22M13	BUSH BUJE	1	1	1	1		
20	90202–12092	WASHER, PLATE ARANDELA DE PLANA	1	1	1	1		
21	90201–08M13	WASHER, PLATE ARANDELA PLANA	1	1	1	1		
22	90508–29M12	SPRING, TORSION RESORTE DE TORSION	1	1	1	1		
23	6E5–41636–01	ROD, MAGNETO CONTROL VARILLA DE CONTROL MAGNETO	1	1	1	1		
24	95380–05600	NUT TUERCA	1	1	1	1		
25	662–41237–01	JOINT, LINK CONECTOR	1	1	1	1		
26	90157–06013	SCREW, PAN HEAD TORNILLO CABEZA CONICA PLANA	1	1	1	1		
27	95303–06600	NUT TUERCA	1	1	1	1		

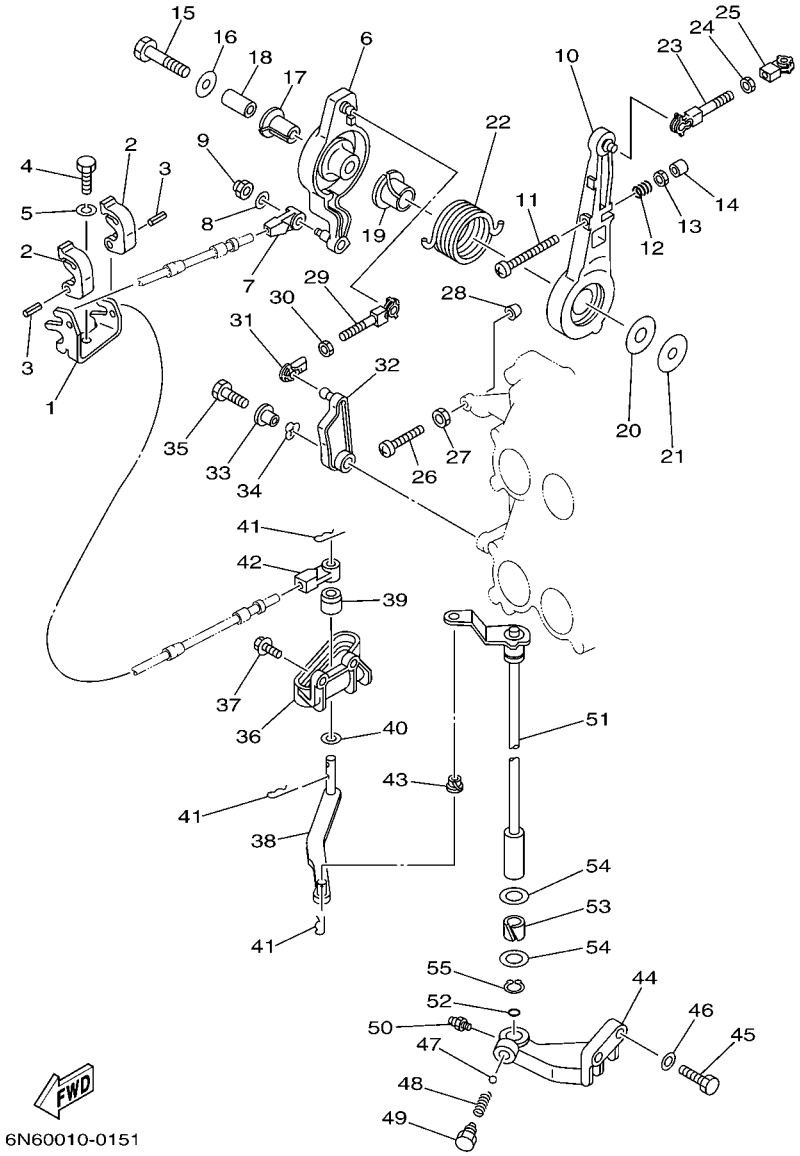

FIG. 22 CONTROL — CONTROL

REF. NO.	PART NO. CODIGO Nº	DESCRIPTION DESCRIPCION	ET	E	WH	MH		REMARKS OBSERVACIONES
28	688–44194–00	CAP TAPA	1	1	1	1		
29	688–41636–00	ROD, MAGNETO CONTROL VARILLA DE CONTROL MAGNETO	1	1	1	1		
30	95380–05600	NUT TUERCA	1	1	1	1		
31	662–41237–01	JOINT, LINK CONECTOR	1	1	1	1		
32	6E5–41213–00	CAM, ACCEL. LEVA ACELERADOR	1	1	1	1		
33	90387–06M29	COLLAR COLLAR	1	1	1	1		
34	90206–10M04	WASHER, WAVE ARANDELA ONDULADA	1	1	1	1		
35	97095–06025	BOLT PERNO	1	1	1	1		
36	6E5–44117–00–1S	BRACKET SOPORTE	1	1	1	1		
37	90119–06MA2	BOLT, WITH WASHER TORNILLO CON ARANDELA	2	2	2	2		
38	68F–44121–00	LEVER, SHIFT ROD PALANCA VARILLA CAMBIOS	1	1	1	1		
39	6E5–44122–00	BUSHING, SHIFT ROD LEVER BUJE PALANCA VARILLA DE CAMBIO	1	1	1	1		
40	90202–08M20	WASHER, PLATE ARANDELA DE PLANA	1	1	1	1		
41	90468–18008	CLIP PRESILLA	3	3	3	3		
42	6E5–48344–00	CABLE END, REMOTE CONTROL BASE CONTROL	1	1	1	1		
43	90386–06M12	BUSH BUJE	1	1	1	1		
44	6E5–44118–01–94	BRACKET SOPORTE	1	1	1	1		
45	97013–08030	BOLT PERNO	2	2	2	2		
46	92903–08600	WASHER, PLATE RONDANA SENCILLA	2	2	2	2		
47	93501–04M02	BALL BOLA	1	1	1	1		
48	90501–12082	SPRING, COMPRESSION RESORTE DE COMPRESION	1	1	1	1		
49	648–42715–00	BUSHING BUJE	1	1	1	1		
50	93700–06M03	NIPPLE, GREASE BOQUILLA DE ENGRASAR	1	1	1	1		
51	6E5–44120–03	HANDLE GEAR SHIFT ASSY MANIJA DE CAMBIO COMPL	1	1				L L
	61U–44120–01	HANDLE GEAR SHIFT ASSY MANIJA DE CAMBIO COMPL			1	1		L L
	61U–44120–11	HANDLE GEAR SHIFT ASSY MANIJA DE CAMBIO COMPL			1	1		Y Y
	6E5–44120–23	HANDLE GEAR SHIFT ASSY MANIJA DE CAMBIO COMPL	1	1				X X

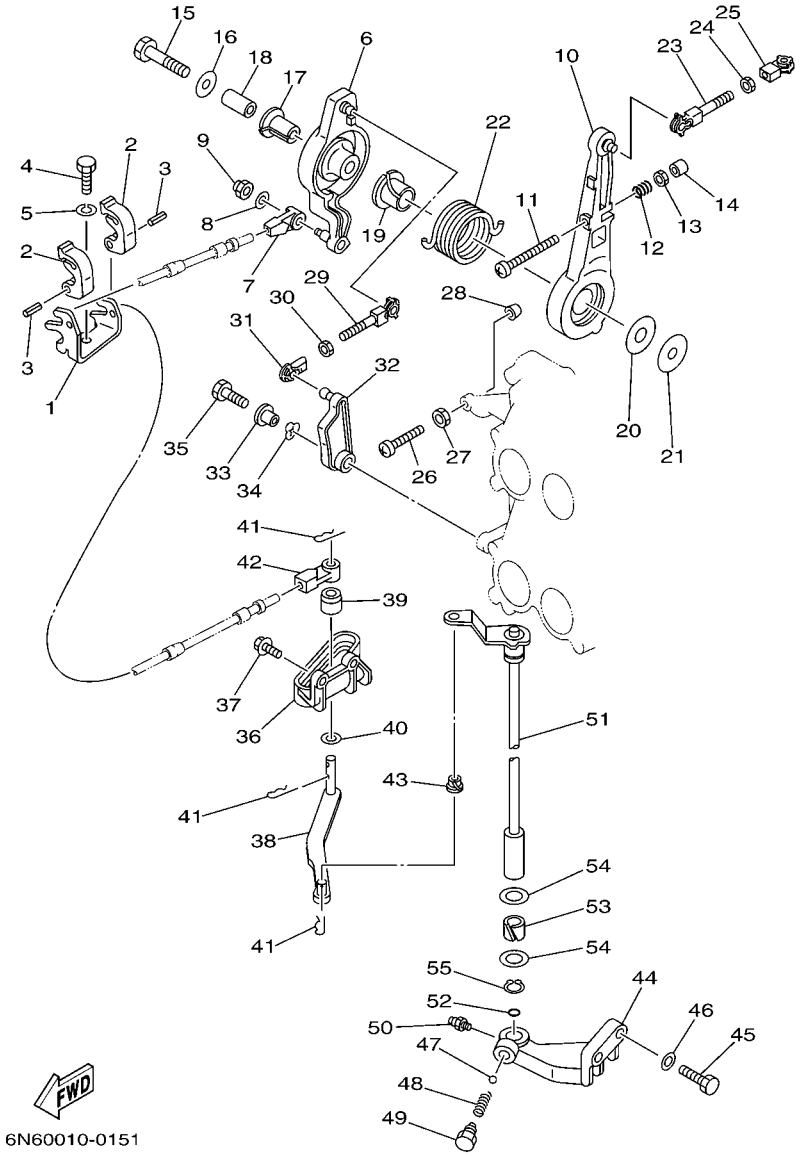

FIG. 22 CONTROL — CONTROL

REF. NO.	PART NO. CODIGO Nº	DESCRIPTION DESCRIPCION	ET	E	WH	MH		REMARKS OBSERVACIONES
51	61U–44120–21	HANDLE GEAR SHIFT ASSY MANIJA DE CAMBIO COMPL			1	1		X X
52	93210–09165	O-RING ANILLO O	1	1	1	1		
53	90386–16M66	BUSH BUJE	1	1	1	1		
54	90202–16061	WASHER, PLATE ARANDELA DE PLANA	2	2	2	2		
55	93410–16006	CIRCLIP SEGURO	1	1	1	1		

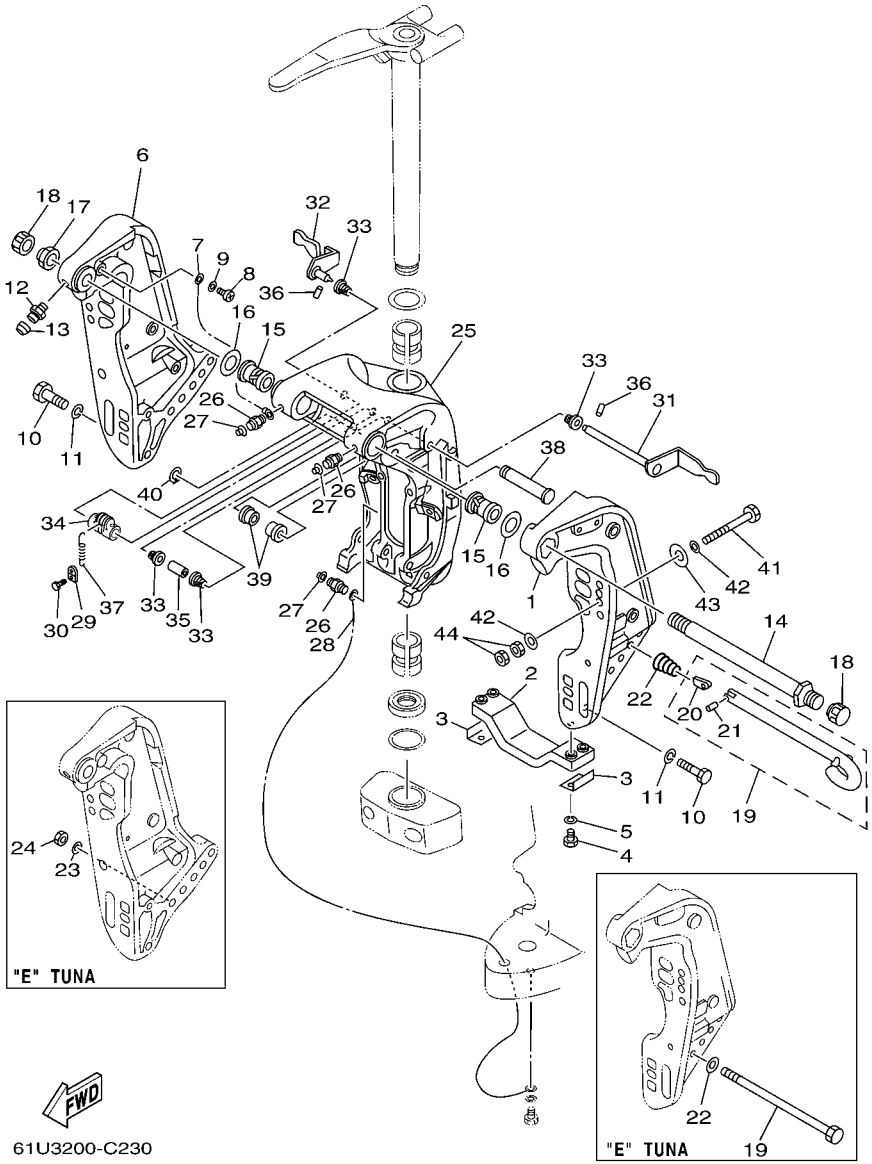

FIG. 23 BRACKET 1 SOPORTE 1

REF. NO.	PART NO. CODIGO Nº	DESCRIPTION DESCRIPCION	ET	E	WH	MH		REMARKS OBSERVACIONES
1	6E5–43111–05–8D	BRACKET, CLAMP SOPORTE DE LA ABRAZADERA		1	1	1		
	6E5–43111–63–8D	BRACKET, CLAMP SOPORTE DE LA ABRAZADERA		1				FOR TUNA FOR TUNA
2	6G5–45251–02	ANODE CATODE		1	1	1		
3	6G5–44526–00	PLATE PLACA 1		2	2	2		
4	97095–06030	BOLT PERNO		4	4	4		
5	92995–06100	WASHER, SPRING ARANDELA		4	4	4		
6	6E5–43112–05–8D	BRACKET, CLAMP SOPORTE DE LA ABRAZADERA		1	1	1		
	6E5–43112–63–8D	BRACKET, CLAMP SOPORTE DE LA ABRAZADERA		1				FOR TUNA FOR TUNA
7	6E5–82148–00	WIRE, LEAD 4 CABLE CONDUCTOR 4		1	1	1		
8	97880–06012	SCREW, PAN HEAD TORNILLO DE CABEZA CON PLANA		1	1	1		
9	92990–06600	WASHER, PLATE ARANDELA PLANA		1	1	1		
10	97095–10045	BOLT PERNO		6	6	6		
11	92995–10100	WASHER ARANDELA		6	6	6		
12	93700–06M03	NIPPLE, GREASE BOQUILLA DE ENGRASAR		1	1	1		
13	663–45119–00	CAP, GREASE NIPPLE TAPA DE GRASERA		1	1	1		AP AP
14	6R3–43131–00	BOLT, CLAMP BRACKET TORNILLO DE ABRAZADERA DEL SOP		1	1	1		
15	90386–25M31	BUSH BUJE		2	2	2		
16	90201–26M59	WASHER, PLATE ARANDELA PLANA		2	2	2		
17	90185–22M11	NUT, SELF-LOCKING TUERCA AUTOBLOCANTE		1	1	1		
18	6G5–43145–01	CAP, CLAMP BRACKET TAPA			2	2		
19	6E5–43160–00	TILT ROD ASSY VARILLA DE BASCULACION COMPL.		1	1	1		
	90109–12M55	BOLT PERNO		1				FOR TUNA FOR TUNA
20	688–43165–00	.PLATE, TILT LOCK .PLACA DE TOPE, VARILLA SEGURI		1	1	1		
21	91690–30014	.PIN, SPRING .PASADOR DE RESORTE		1	1	1		
22	90502–20M03	SPRING, CONICAL RESORTE CONICO		1	1	1		
	92995–16600	WASHER ARANDELA		1				FOR TUNA FOR TUNA
23	92995–12200	WASHER ARANDELA		1				FOR TUNA FOR TUNA

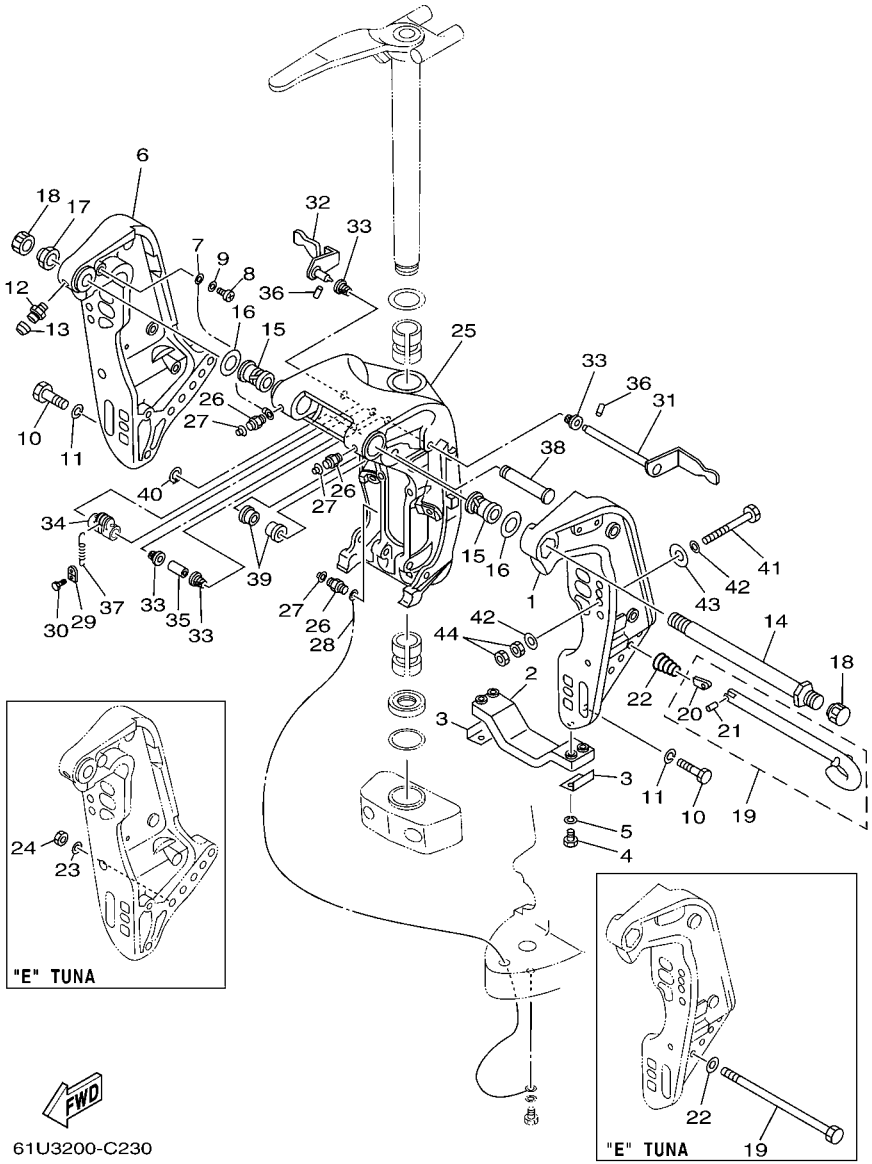

FIG. 23 BRACKET 1 SOPORTE 1

REF. NO.	PART NO. CODIGO Nº	DESCRIPTION DESCRIPCION	ET	E	WH	MH		REMARKS OBSERVACIONES
24	95780–12300	NUT, FLANGE TUERCA		1				FOR TUNA FOR TUNA
25	6E5–43311–A2–8D	BRACKET, SWIVEL 1 SOPORTE GIRATORIO 1		1	1	1		L/Y L/Y
	6E5–43311–E2–8D	BRACKET, SWIVEL 1 SOPORTE GIRATORIO 1		1	1	1		X X
26	93700–06M03	NIPPLE, GREASE BOQUILLA DE ENGRASAR		3	3	3		
27	663–45119–00	CAP, GREASE NIPPLE TAPA DE GRASERA		3	3	3		AP AP
28	6E5–82147–00	WIRE, LEAD 4 CABLE CONDUCTOR 4		1	1	1		L/Y L/Y
	6E5–82147–20	WIRE, LEAD 4 CABLE CONDUCTOR 4		1	1	1		X X
29	6G5–43144–00	HOOK, SPRING GANCHO		1	1	1		
30	97095–06010	BOLT PERNO		1	1	1		
31	61U–43181–00	LEVER, TILT STOP PALANCA TOPE INCLINACION		1	1	1		
32	61U–43185–00	LEVER, TILT STOP PALANCA TOPE INCLINACION		1	1	1		
33	90386–10M16	BUSH BUJE		4	4	4		
34	6G5–43148–10	COLLAR, DISTANCE COLLAR		1	1	1		
35	90387–10M05	COLLAR COLLAR		1	1	1		
36	91690–30020	PIN, SPRING PASADOR DE RESORTE		2	2	2		
37	90506–20011	SPRING, TENSION RESORTE DE TENSION		1	1	1		
38	6E5–43126–02	PIN, UPPER SHOCK MOUNT PASADOR DE AMORTIGUADOR SUPERI		1	1	1		
39	90386–18M44	BUSH BUJE		2	2	2		
40	93410–18M02	CIRCLIP SEGURO		1	1	1		
41	90101–12M03	BOLT (L:115MM) TORNILLO (L:115MM)		4	4	4		
	90101–12M03	BOLT (L:115MM) TORNILLO (L:115MM)		6				FOR TUNA FOR TUNA
42	90201–13M01	WASHER, PLATE ARANDELA PLANA		8	8	8		
	90201–13M01	WASHER, PLATE ARANDELA PLANA		12				FOR TUNA FOR TUNA
43	90201–12M05	WASHER, PLATE ARANDELA PLANA		4	4	4		
	90201–12M05	WASHER, PLATE ARANDELA PLANA		6				FOR TUNA FOR TUNA
44	95380–12600	NUT TUERCA		8	8	8		
	95380–12600	NUT TUERCA		12				FOR TUNA FOR TUNA

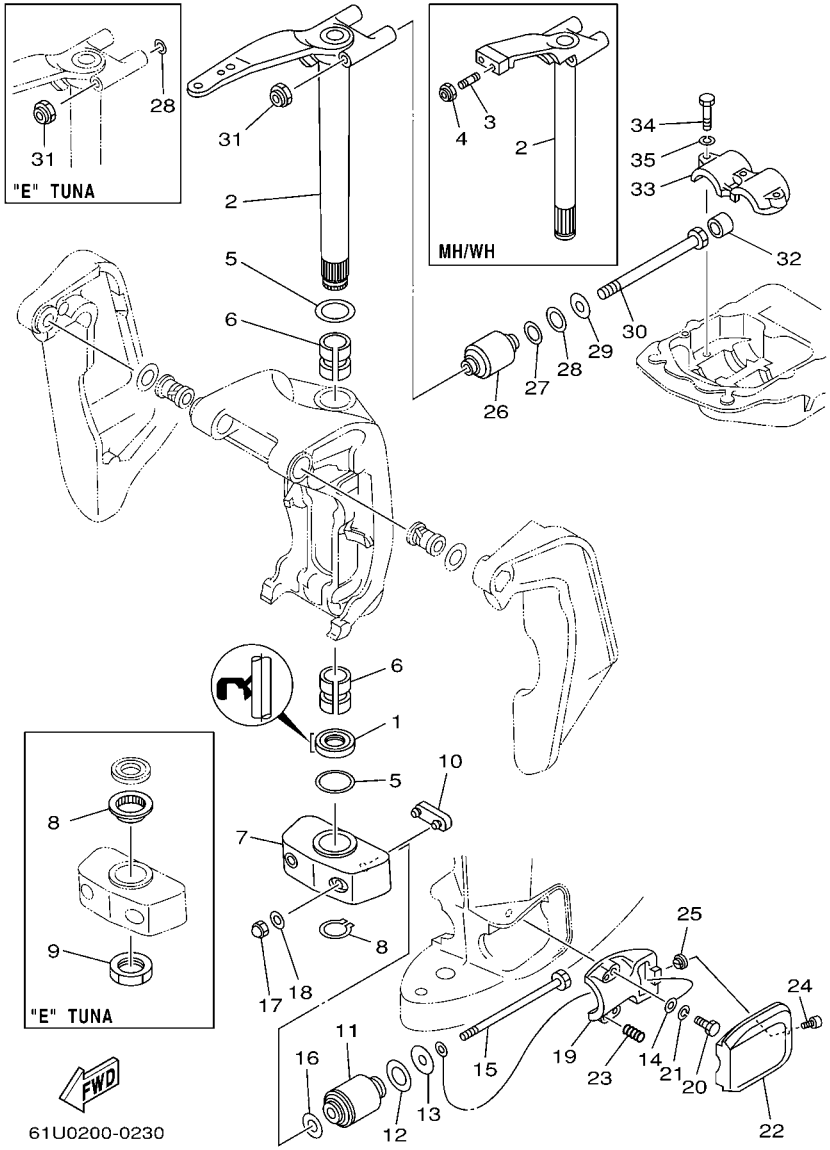

FIG. 24 BRACKET 2 SOPORTE 2

REF. NO.	PART NO. CODIGO Nº	DESCRIPTION DESCRIPCION	ET	E	WH	MH		REMARKS OBSERVACIONES
1	93109–38M02	OIL SEAL SELLO ACEITE		1	1	1		
2	6E5–42510–05–8D	STEERING BRACKET ASSY SOPORTE DIRECCION COMPL.		1				L L
	6E5–42510–11–8D	STEERING BRACKET ASSY SOPORTE DIRECCION COMPL.			1	1		L/Y L/Y
	6E5–42510–61–8D	STEERING BRACKET ASSY SOPORTE DIRECCION COMPL.		1				L-FOR TUNA L-FOR TUNA
	6E5–42510–25–8D	STEERING BRACKET ASSY SOPORTE DIRECCION COMPL.		1				X X
	6E5–42510–71–8D	STEERING BRACKET ASSY SOPORTE DIRECCION COMPL.			1	1		X X
3	90116–10M28	BOLT, STUD ESPARRAGO			2	2		
4	90185–10051	NUT, SELF-LOCKING TUERCA AUTOBLOCANTE			2	2		
5	90201–38M60	WASHER, PLATE ARANDELA PLANA		2	2	2		
	90201–38M60	WASHER, PLATE ARANDELA PLANA		1				FOR TUNA FOR TUNA
6	90386–38M32	BUSH BUJE		2	2	2		
	90386–38M89	BUSH BUJE		2				FOR TUNA FOR TUNA
7	6G5–44551–01–8D	HOUSING, LOWER MOUNT RUBBER CAJA AMORTIGUADOR INFERIOR HU		1	1	1		
	6E5–44551–61–8D	HOUSING, LOWER MOUNT RUBBER CAJA AMORTIGUADOR INFERIOR HU		1				FOR TUNA FOR TUNA
8	93410–37M04	CIRCLIP SEGURO		1	1	1		
	6E5–42535–60	WASHER, THRUST RONDANA EMPUJE		1				FOR TUNA FOR TUNA
9	6E5–42546–60	NUT TUERCA		1				FOR TUNA FOR TUNA
10	6E5–44575–00	DAMPER, LOWER MOUNT RUBBER AMORTIGUADOR INFERIOR		1	1	1		
11	6E5–44555–00–94	MOUNT DAMPER, LOWER SIDE AMORTIGUADOR DE HULE LADO INFE		2	2	2		
12	90202–32M19	WASHER, PLATE ARANDELA DE PLANA		2	2	2		
13	90201–16M55	WASHER, PLATE ARANDELA PLANA		2	2	2		
14	6E5–82149–00	WIRE, LEAD 3 CABLE CONDUCTOR 3		1	1	1		
15	90109–14M34	BOLT PERNO		2	2	2		
	90109–14M54	BOLT PERNO		2				FOR TUNA FOR TUNA
16	90201–15M58	WASHER, PLATE ARANDELA PLANA		2	2	2		
17	95380–14800	NUT TUERCA		2	2	2		
	90185–14M00	NUT, SELF-LOCKING TUERCA AUTOBLOCANTE		2				FOR TUNA FOR TUNA

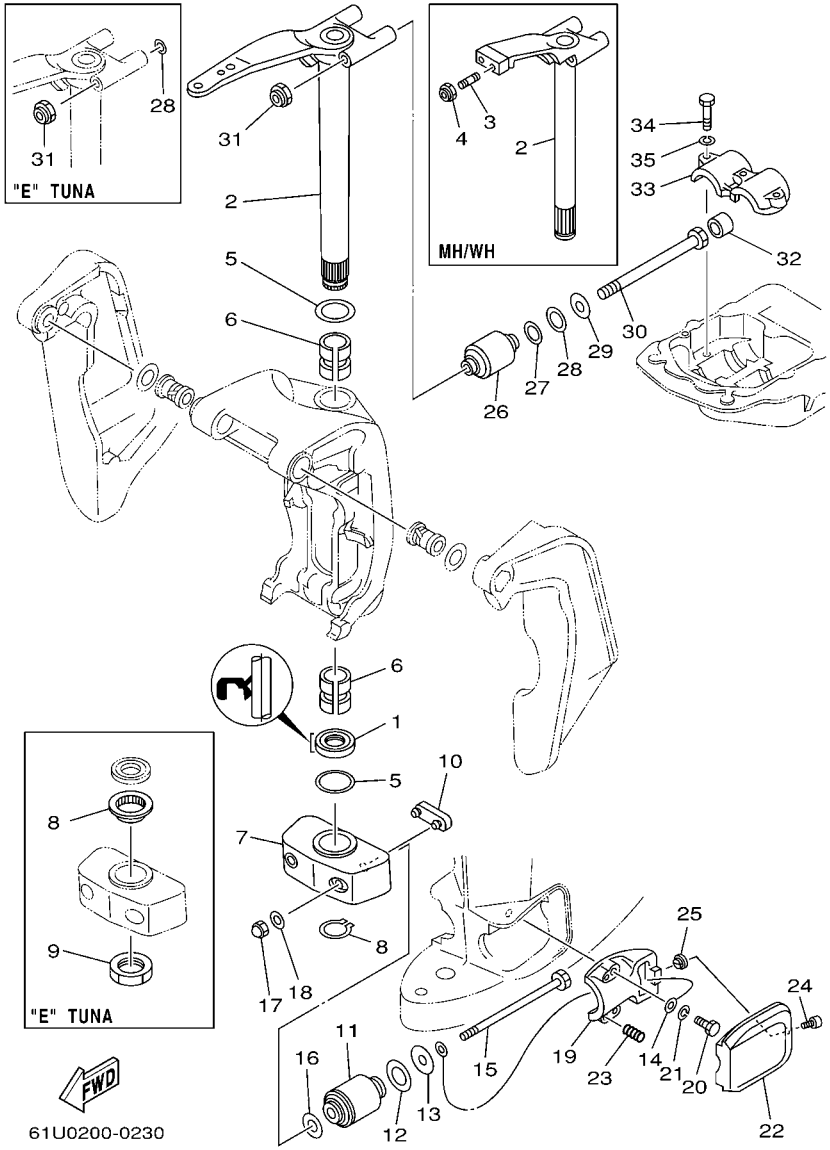

FIG. 24 BRACKET 2 SOPORTE 2

REF. NO.	PART NO. CODIGO Nº	DESCRIPTION DESCRIPCION	ET	E	WH	MH		REMARKS OBSERVACIONES
18	92995–14600	WASHER ARANDELA		2	2	2		
19	6E5–44552–01–94	HOUSING, LOWER MOUNT RUBBER CAJA AMORTIGUADOR INFERIOR HU		2	2	2		
20	97095–10045	BOLT PERNO		4	4	4		
21	92995–10100	WASHER ARANDELA		4	4	4		
22	6E5–44553–01–8D	COVER, LOWER MOUNT CUBIERTA,AMORTIGUADOR INFERIOR		2	2	2		
23	90501–16M28	SPRING, COMPRESSION RESORTE DE COMPRESION		4	4	4		
24	97885–06016	SCREW, PAN HEAD TORNILLO A MUESCA		2	2	2		
25	90179–06066	NUT TUERCA		2	2	2		
26	6E5–44514–00–94	MOUNT DAMPER, UPPER SIDE AMORTIGUADOR LADO SUPERIOR		2	2	2		
	6E5–44514–60–94	MOUNT DAMPER, UPPER SIDE AMORTIGUADOR LADO SUPERIOR		2				FOR TUNA FOR TUNA
27	90201–26M57	WASHER, PLATE ARANDELA PLANA		2	2	2		
28	90202–26M18	WASHER, PLATE ARANDELA DE PLANA		2	2	2		
	92995–14200	WASHER ARANDELA		2				FOR TUNA FOR TUNA
29	90201–14M56	WASHER, PLATE ARANDELA PLANA		2	2	2		
	90201–15M00	WASHER, PLATE ARANDELA PLANA		2				FOR TUNA FOR TUNA
30	90109–12M37	BOLT PERNO		2	2	2		
	90109–14M53	BOLT PERNO		2				FOR TUNA FOR TUNA
31	90185–12M12	NUT, SELF-LOCKING TUERCA AUTOBLOCANTE		2	2	2		
	90185–14M00	NUT, SELF-LOCKING TUERCA AUTOBLOCANTE		2				FOR TUNA FOR TUNA
32	663–44575–00	DAMPER, LOWER MOUNT RUBBER AMORTIGUADOR INFERIOR		2	2	2		EXCEPT FOR TUNA EXCEPT FOR TUNA
33	6E5–44511–00–5B	COVER, UPPER MOUNT CUBIERTA AMORTIGUADOR SUPERIOR		1	1	1		
	6E5–44511–60–5B	COVER, UPPER MOUNT CUBIERTA AMORTIGUADOR SUPERIOR		1				FOR TUNA FOR TUNA
34	97095–10045	BOLT PERNO		3	3	3		
35	92995–10100	WASHER ARANDELA		3	3	3		

FIG. 25 BRACKET 3 SOPORTE 3

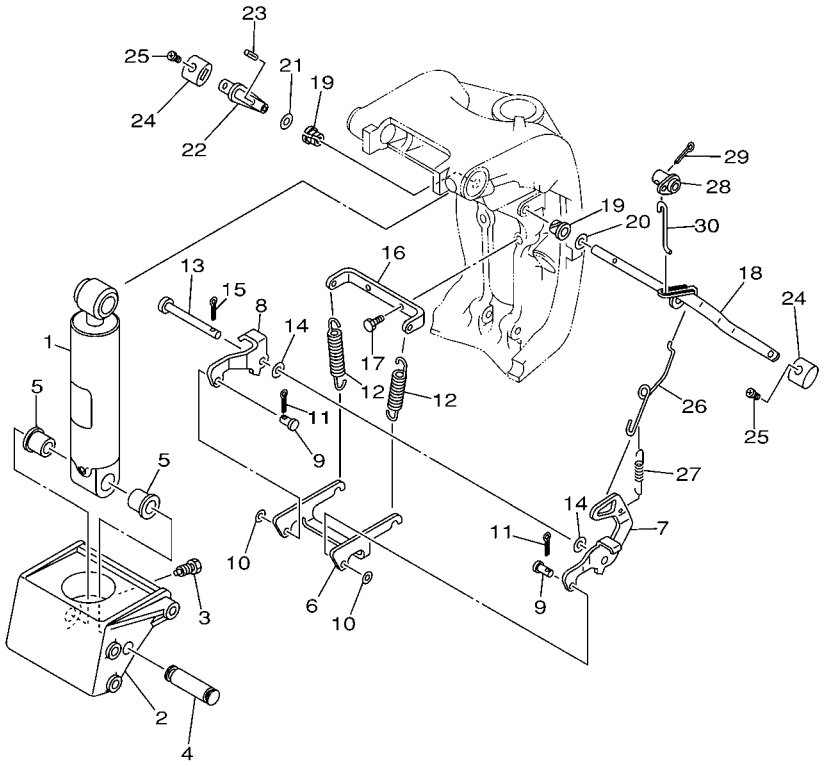

6E50200-0160

REF. NO.	PART NO. CODIGO Nº	DESCRIPTION DESCRIPCION	ET	E	WH	MH		REMARKS OBSERVACIONES
1	6E5–43170–00–4D	SHOCK ABSORBER ASSY AMORTIGUADOR COMPL.		1	1	1		
2	6E5–43128–00–8D	SPACER, CLAMP BRACKET ESPACIADOR ABRAZADERA SOPORTE		1	1	1		
3	90109–06M07	BOLT PERNO		1	1	1		
4	6E5–43124–00	PIN, LOWER SHOCK MOUNT PASADOR DE AMORTIGUADOR INFERI		1	1	1		
5	90386–18M44	BUSH BUJE		2	2	2		
6	6E5–43613–00	ARM, TILT LOCK BRAZO DE SEGURO DE INCLINACION		1	1	1		
7	6E5–43614–00	PLATE, TILT LOCK PLACA DE SEGURO DE INCLINACION		1	1	1		
8	6E5–43615–00	PLATE, TILT LOCK PLACA DE SEGURO DE INCLINACION		1	1	1		
9	90240–06M07	PIN, CLEVIS PASADOR CON HOYO		2	2	2		
10	92990–06600	WASHER, PLATE ARANDELA PLANA		2	2	2		
11	91490–25012	PIN, COTTER CHAVETA		2	2	2		
12	90506–23M10	SPRING, TENSION RESORTE DE TENSION		2	2	2		
13	6E5–43659–00	SHAFT, REVERSE LOCK EJE SEGURO DE REVERSA		1	1	1		
14	92995–08600	WASHER ARANDELA		2	2	2		
15	91490–25012	PIN, COTTER CHAVETA		1	1	1		
16	6E5–43679–00	STOPPER, HOOK TAPON		1	1	1		
17	97095–06016	BOLT PERNO		2	2	2		
18	6E5–43630–01	TILT LEVER ASSY PLANCA DE INCLINACION COMPL		1	1	1		
19	90386–08032	BUSH BUJE		2	2	2		
20	90202–08M08	WASHER, PLATE ARANDELA DE PLANA		1	1	1		
21	92995–08600	WASHER ARANDELA		1	1	1		
22	61U–43631–00	LEVER, TILT PALANCA DE INCLINACION		1	1	1		
23	90254–03003	PIN, SPRING PASADOR DE TIPO A RESORTE		1	1	1		
24	6E5–43317–00	GRIP MANGO		2	2	2		
25	90152–05M00	SCREW, COUNTERSUNK TORNILLO EMBUTIDO		2	2	2		
26	6E5–43616–00	ROD, TILT LOCK VARILLA SEGURO DE INCLINACION		1	1	1		
27	90506–09M09	SPRING, TENSION RESORTE DE TENSION		1	1	1		

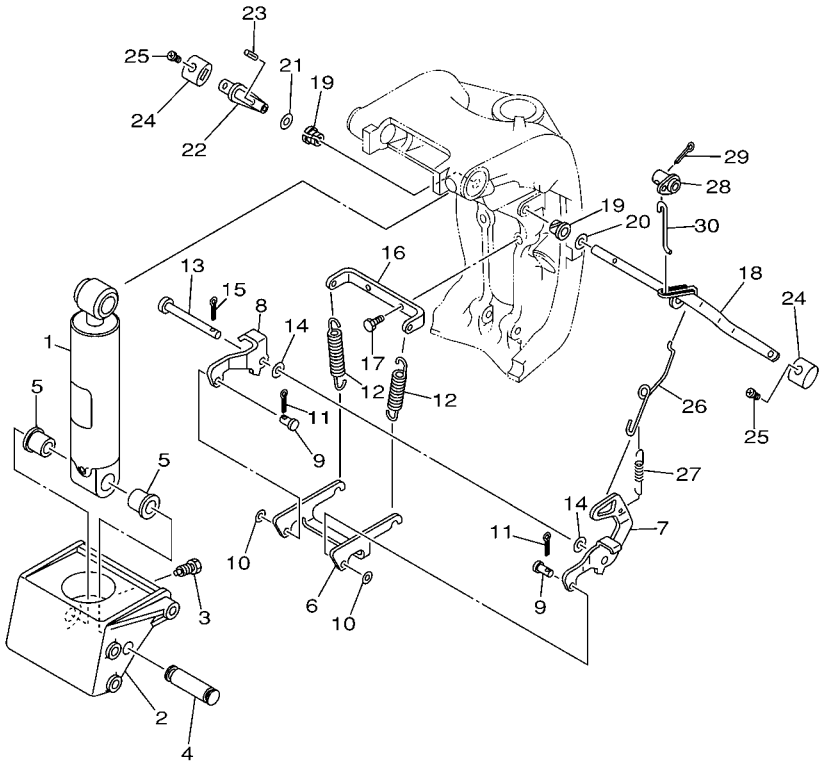

6E50200-0160

FIG. 25 BRACKET 3 SOPORTE 3

REF. NO.	PART NO. CODIGO Nº	DESCRIPTION DESCRIPCION	ET	E	WH	MH		REMARKS OBSERVACIONES
28	688–43184–00	COLLAR, ANCHOR LEVER COLLAR		1	1	1		
29	91490–30025	PIN, COTTER CHAVETA		1	1	1		
30	6E5–43676–00	HOOK GANCHO		1	1	1		

FIG. 26 BRACKET 4 SOPORTE 4

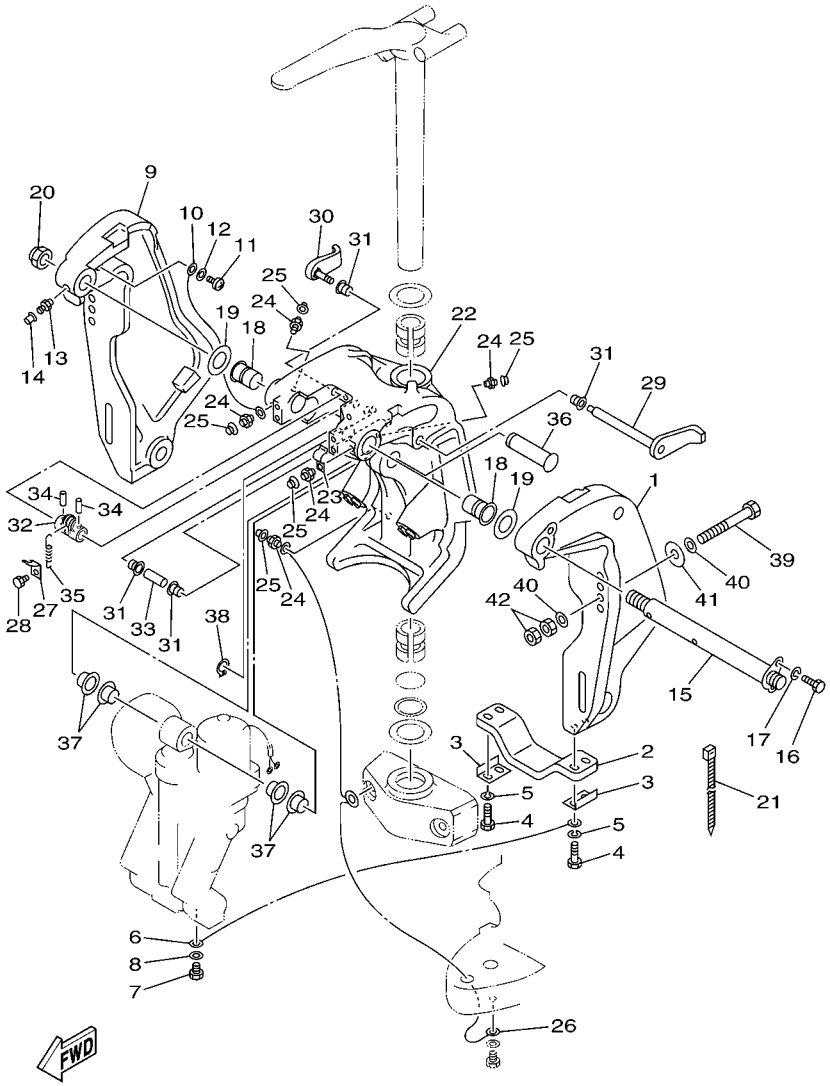

REF. NO.	PART NO. CODIGO Nº	DESCRIPTION DESCRIPCION	ET	E	WH	MH		REMARKS OBSERVACIONES
1	64E–43111–02–8D	BRACKET, CLAMP SOPORTE DE LA ABRAZADERA	1					
2	6G5–45251–02	ANODE CATODE	1					
3	6G5–44526–00	PLATE PLACA 1	2					
4	97095–06030	BOLT PERNO	4					
5	92995–06100	WASHER, SPRING ARANDELA	4					
6	6E5–82148–00	WIRE, LEAD 4 CABLE CONDUCTOR 4	1					
7	97095–06010	BOLT PERNO	1					
8	92995–06600	WASHER ARANDELA	1					
9	64E–43112–02–8D	BRACKET, CLAMP SOPORTE DE LA ABRAZADERA	1					
10	6E5–82148–00	WIRE, LEAD 4 CABLE CONDUCTOR 4	1					
11	97880–06012	SCREW, PAN HEAD TORNILLO DE CABEZA CON PLANA	1					
12	92990–06600	WASHER, PLATE ARANDELA PLANA	1					
13	93700–06M03	NIPPLE, GREASE BOQUILLA DE ENGRASAR	1					
14	663–45119–00	CAP, GREASE NIPPLE TAPA DE GRASERA	1					AP AP
15	64E–43131–01	BOLT, CLAMP BRACKET TORNILLO DE ABRAZADERA DEL SOP	1					
16	97095–08020	BOLT PERNO	1					
17	92995–08100	WASHER ARANDELA	1					
18	90386–25M31	BUSH BUJE	2					
19	90201–26M59	WASHER, PLATE ARANDELA PLANA	2					
20	90185–22M11	NUT, SELF-LOCKING TUERCA AUTOBLOCANTE	1					
21	90465–11M10	CLAMP BRIDA	1					
22	64E–43311–10–8D	BRACKET, SWIVEL 1 SOPORTE GIRATORIO 1	1					L L
	64E–43311–20–8D	BRACKET, SWIVEL 1 SOPORTE GIRATORIO 1	1					X X
23	90465–08M63	CLAMP BRIDA	1					
24	93700–06M03	NIPPLE, GREASE BOQUILLA DE ENGRASAR	5					
25	663–45119–00	CAP, GREASE NIPPLE TAPA DE GRASERA	5					AP AP
26	6E5–82147–00	WIRE, LEAD 4 CABLE CONDUCTOR 4	1					L L

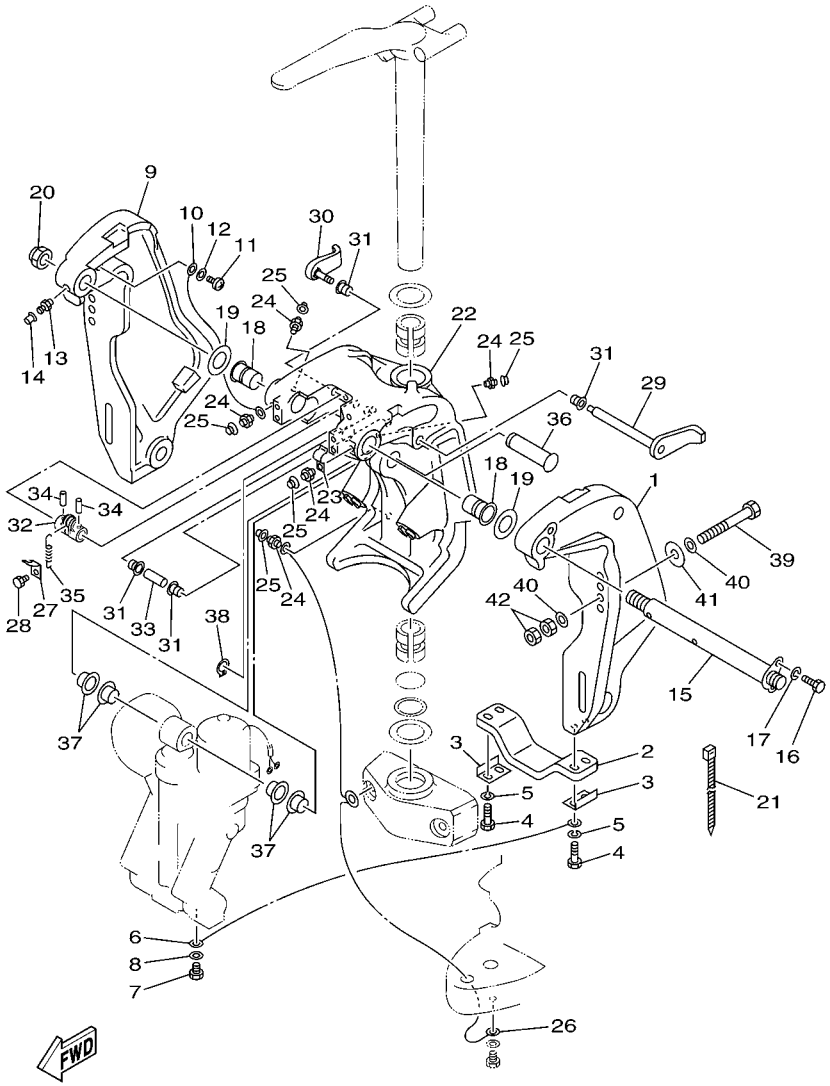

FIG. 26 BRACKET 4 SOPORTE 4

REF. NO.	PART NO. CODIGO Nº	DESCRIPTION DESCRIPCION	ET	E	WH	MH		REMARKS OBSERVACIONES
26	6E5–82147–20	WIRE, LEAD 4 CABLE CONDUCTOR 4	1					X X
27	6G5–43144–00	HOOK, SPRING GANCHO	1					
28	97095–06010	BOLT PERNO	1					
29	6G5–43181–02	LEVER, TILT STOP PALANCA TOPE INCLINACION	1					
30	6G5–43185–02	LEVER, TILT STOP PALANCA TOPE INCLINACION	1					
31	90386–10M16	BUSH BUJE	4					
32	6G5–43148–10	COLLAR, DISTANCE COLLAR	1					
33	90387–10M05	COLLAR COLLAR	1					
34	91690–30020	PIN, SPRING PASADOR DE RESORTE	2					
35	90506–20011	SPRING, TENSION RESORTE DE TENSION	1					
36	64E–43126–00	PIN, UPPER SHOCK MOUNT PASADOR DE AMORTIGUADOR SUPERI	1					
37	90386–22M98	BUSH BUJE	4					
38	93410–22M11	CIRCLIP SEGURO	1					
39	90101–12M03	BOLT (L:115MM) TORNILLO (L:115MM)	4					
	90101–12M03	BOLT (L:115MM) TORNILLO (L:115MM)	6					FOR TUNA FOR TUNA
40	90201–13M01	WASHER, PLATE ARANDELA PLANA	8					
	90201–13M01	WASHER, PLATE ARANDELA PLANA	12					FOR TUNA FOR TUNA
41	90201–12M05	WASHER, PLATE ARANDELA PLANA	4					
	90201–12M05	WASHER, PLATE ARANDELA PLANA	6					FOR TUNA FOR TUNA
42	95380–12600	NUT TUERCA	8					
	95380–12600	NUT TUERCA	12					FOR TUNA FOR TUNA

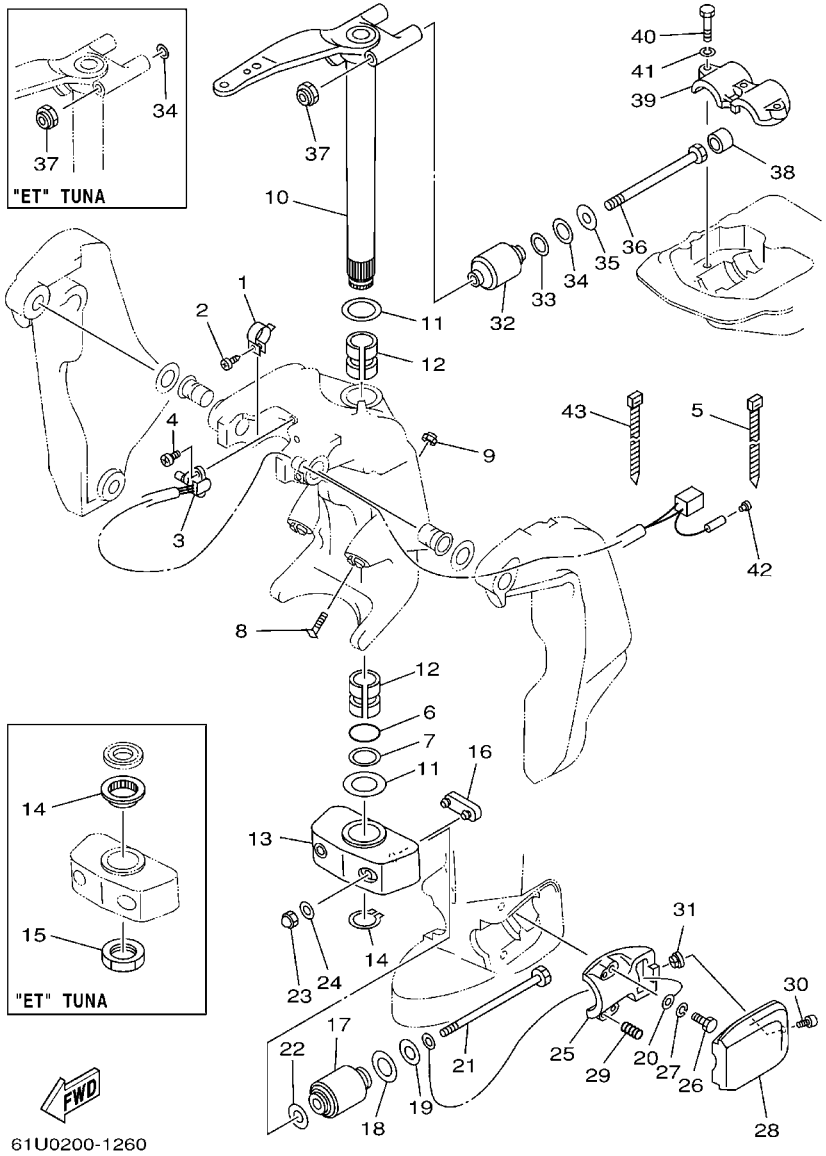

FIG. 27 BRACKET 5 SOPORTE 5

REF. NO.	PART NO. CODIGO Nº	DESCRIPTION DESCRIPCION	ET	E	WH	MH		REMARKS OBSERVACIONES
1	64E–43139–02	CAM, TRIM SENDER LEVA TRANSMISOR DE INCLINDOR	1					
2	97780–60525	SCREW, TAPPING TORNILLO DE CABEZA DE CONO ACH	1					
3	64E–83672–02	TRIM SENDER TRANSMISOR DE INCLINADOR	1					
4	97885–06016	SCREW, PAN HEAD TORNILLO A MUESCA	2					
5	90465–11M10	CLAMP BRIDA	3					
6	93210–37MH7	O-RING ANILLO O	1					
7	90202–40M47	WASHER, PLATE ARANDELA DE PLANA	1					
8	61A–43376–00	BOLT, THRUST RECEIVER TORNILLO RECEPTOR	2					
9	95780–10300	NUT, FLANGE TUERCA	2					
10	6E5–42510–05–8D	STEERING BRACKET ASSY SOPORTE DIRECCION COMPL.	1					L L
	6E5–42510–25–8D	STEERING BRACKET ASSY SOPORTE DIRECCION COMPL.	1					X X
	6E5–42510–61–8D	STEERING BRACKET ASSY SOPORTE DIRECCION COMPL.	1					L-FOR TUNA L-FOR TUNA
11	90201–38M60	WASHER, PLATE ARANDELA PLANA	2					
	90201–38M60	WASHER, PLATE ARANDELA PLANA	1					FOR TUNA FOR TUNA
12	90386–38M32	BUSH BUJE	2					
	90386–38M89	BUSH BUJE	2					FOR TUNA FOR TUNA
13	6G5–44551–01–8D	HOUSING, LOWER MOUNT RUBBER CAJA AMORTIGUADOR INFERIOR HU	1					
	6E5–44551–61–8D	HOUSING, LOWER MOUNT RUBBER CAJA AMORTIGUADOR INFERIOR HU	1					FOR TUNA FOR TUNA
14	93410–37M04	CIRCLIP SEGURO	1					
	6E5–42535–60	WASHER, THRUST RONDANA EMPUJE	1					FOR TUNA FOR TUNA
15	6E5–42546–60	NUT TUERCA	1					FOR TUNA FOR TUNA
16	6E5–44575–00	DAMPER, LOWER MOUNT RUBBER AMORTIGUADOR INFERIOR	1					
17	6E5–44555–00–94	MOUNT DAMPER, LOWER SIDE AMORTIGUADOR DE HULE LADO INFE	2					
18	90202–32M19	WASHER, PLATE ARANDELA DE PLANA	2					
19	90201–16M55	WASHER, PLATE ARANDELA PLANA	2					
20	6E5–82149–00	WIRE, LEAD 3 CABLE CONDUCTOR 3	1					
21	90109–14M34	BOLT PERNO	2					

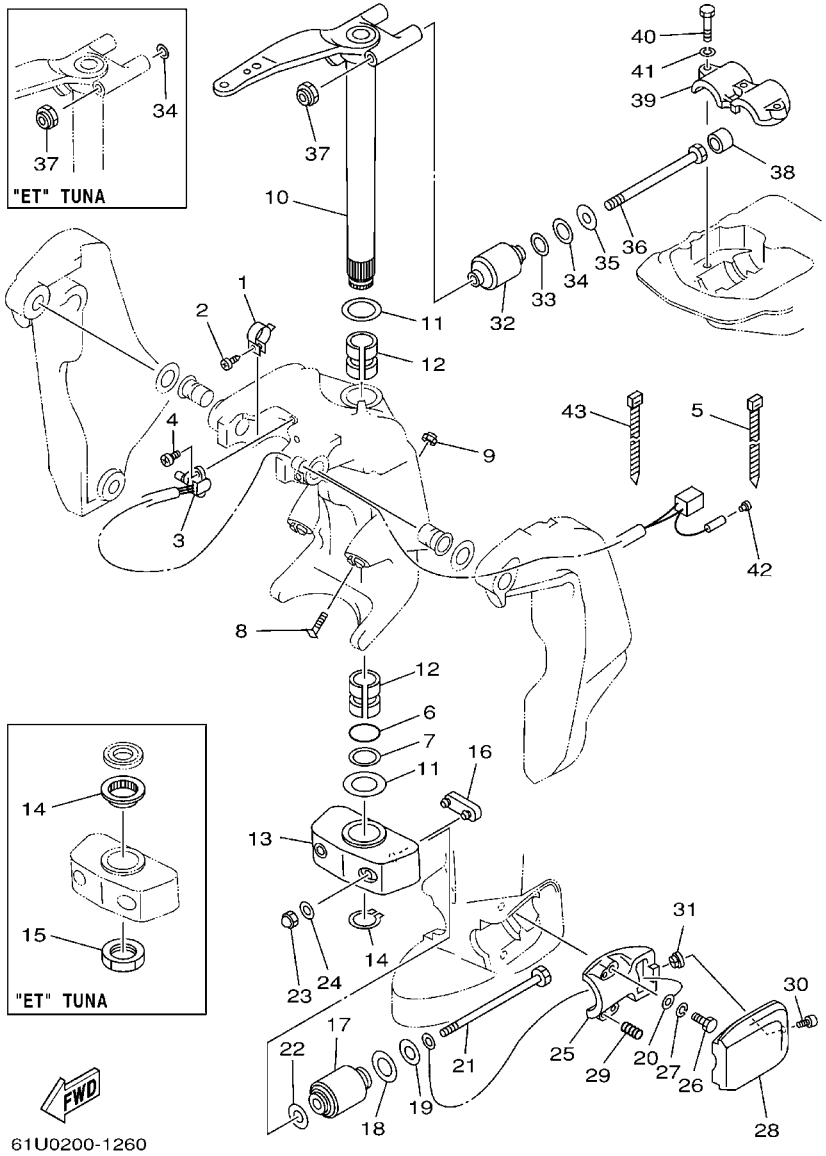

FIG. 27 BRACKET 5 SOPORTE 5

REF. NO.	PART NO. CODIGO Nº	DESCRIPTION DESCRIPCION	ET	E	WH	MH		REMARKS OBSERVACIONES
21	90109–14M54	BOLT PERNO	2					FOR TUNA FOR TUNA
22	90201–15M58	WASHER, PLATE ARANDELA PLANA	2					
23	95380–14800	NUT TUERCA	2					
	90185–14M00	NUT, SELF-LOCKING TUERCA AUTOBLOCANTE	2					FOR TUNA FOR TUNA
24	92995–14600	WASHER ARANDELA	2					
25	6E5–44552–01–94	HOUSING, LOWER MOUNT RUBBER CAJA AMORTIGUADOR INFERIOR HU	2					
26	97095–10045	BOLT PERNO	4					
27	92995–10100	WASHER ARANDELA	4					
28	6E5–44553–01–8D	COVER, LOWER MOUNT CUBIERTA,AMORTIGUADOR INFERIOR	2					
29	90501–16M28	SPRING, COMPRESSION RESORTE DE COMPRESION	4					
30	97885–06016	SCREW, PAN HEAD TORNILLO A MUESCA	2					
31	90179–06066	NUT TUERCA	2					
32	6E5–44514–00–94	MOUNT DAMPER, UPPER SIDE AMORTIGUADOR LADO SUPERIOR	2					
	6E5–44514–60–94	MOUNT DAMPER, UPPER SIDE AMORTIGUADOR LADO SUPERIOR	2					FOR TUNA FOR TUNA
33	90201–26M57	WASHER, PLATE ARANDELA PLANA	2					
34	90202–26M18	WASHER, PLATE ARANDELA DE PLANA	2					
	92995–14200	WASHER ARANDELA	2					FOR TUNA FOR TUNA
35	90201–14M56	WASHER, PLATE ARANDELA PLANA	2					
	90201–15M00	WASHER, PLATE ARANDELA PLANA	2					FOR TUNA FOR TUNA
36	90109–12M37	BOLT PERNO	2					
	90109–14M53	BOLT PERNO	2					FOR TUNA FOR TUNA
37	90185–12M12	NUT, SELF-LOCKING TUERCA AUTOBLOCANTE	2					
	90185–14M00	NUT, SELF-LOCKING TUERCA AUTOBLOCANTE	2					FOR TUNA FOR TUNA
38	663–44575–00	DAMPER, LOWER MOUNT RUBBER AMORTIGUADOR INFERIOR	2					EXCEPT FOR TUNA EXCEPT FOR TUNA
39	6E5–44511–00–5B	COVER, UPPER MOUNT CUBIERTA AMORTIGUADOR SUPERIOR	1					
	6E5–44511–60–5B	COVER, UPPER MOUNT CUBIERTA AMORTIGUADOR SUPERIOR	1					FOR TUNA FOR TUNA
40	97095–10045	BOLT PERNO	3					

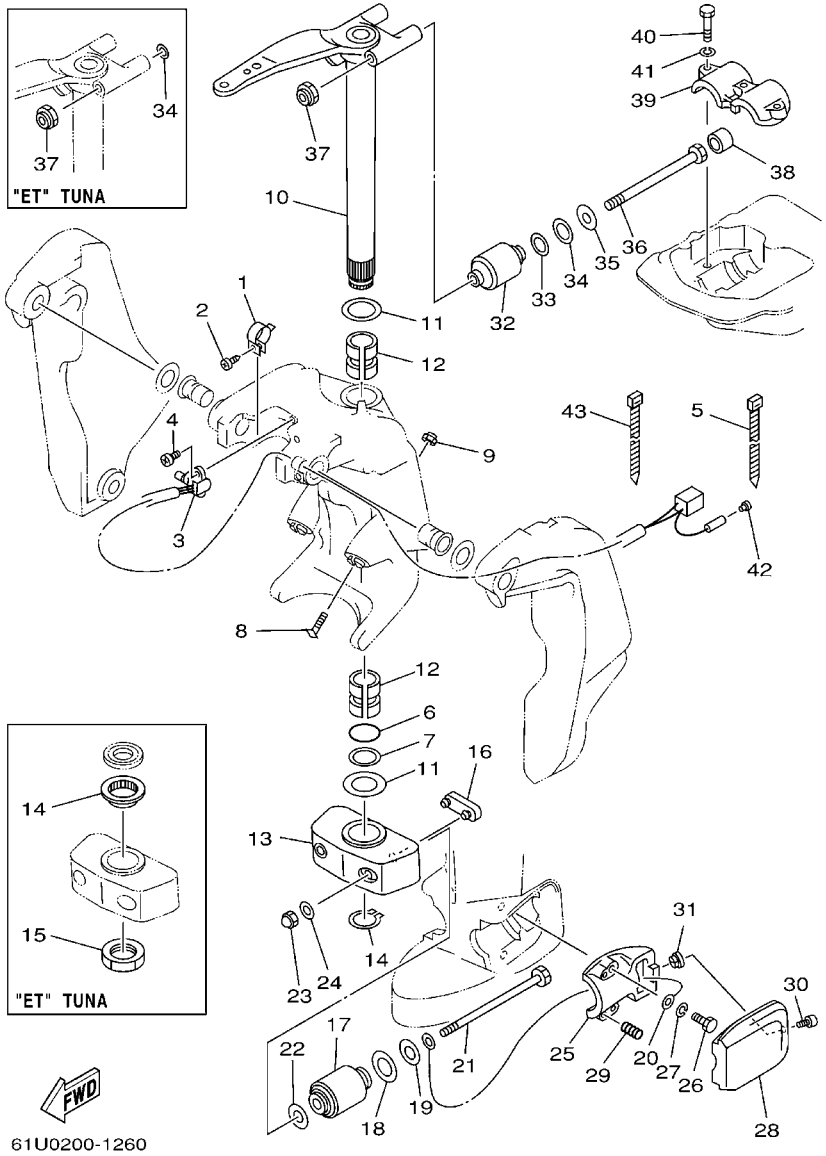

FIG. 27 BRACKET 5 SOPORTE 5

REF. NO.	PART NO. CODIGO Nº	DESCRIPTION DESCRIPCION	ET	E	WH	MH		REMARKS OBSERVACIONES
41	92995–10100	WASHER ARANDELA	3					
42	703–82119–00	COVER, LEAD WIRE CUBIERTA DE CABLE CONDUCTOR	1					
43	90465–13M18	CLAMP BRIDA	1					

FIG. 28 POWER TRIM & TILT ASSY 1 COMPONER Y PODER VARILLA 1

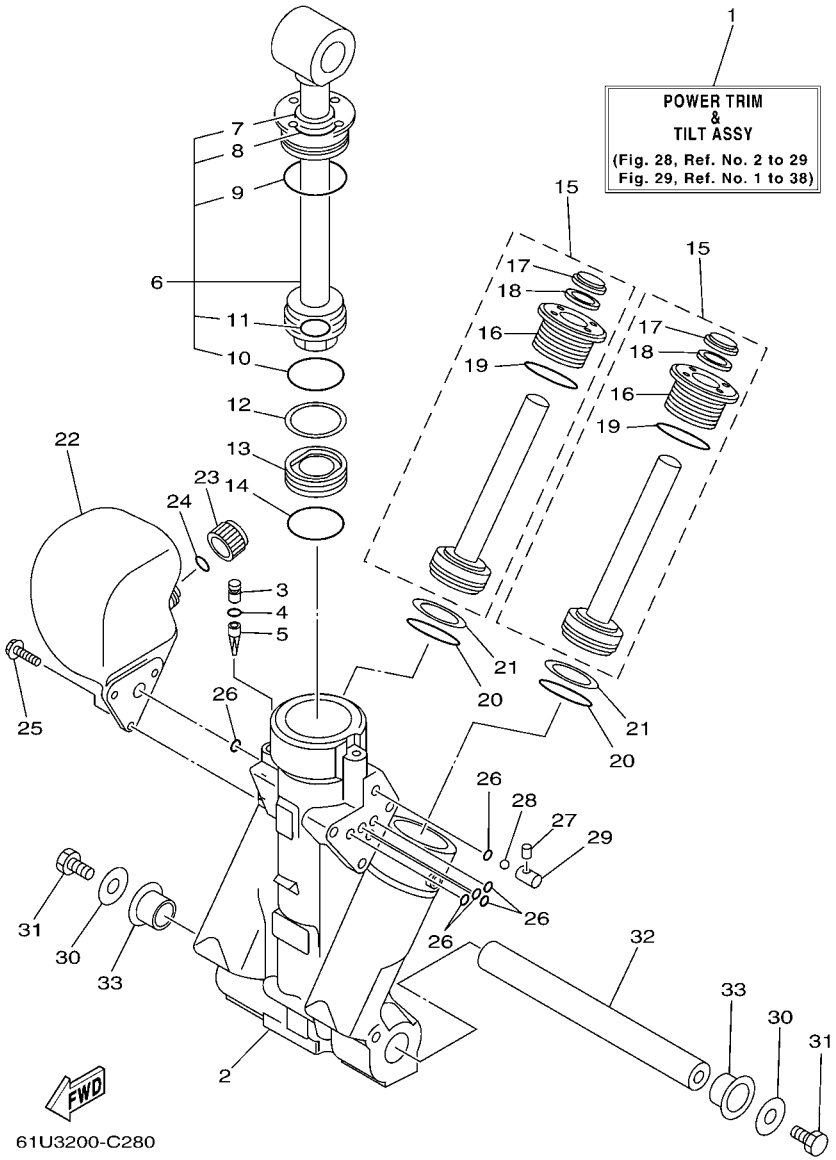

REF. NO.	PART NO. CODIGO Nº	DESCRIPTION DESCRIPCION	ET	E	WH	MH		REMARKS OBSERVACIONES
1	64E–43800–02–4D	POWER TRIM & TILT ASSY ELEVADOR HIDRAULICO COMPL.	1					
2	64E–43825–01	HOUSING, TRIM & TILT CAJA INCLINACION Y ADRNO	1					
3	64E–4388J–00	PLUG 2 TAPON 2	1					
4	93210–10M74	O-RING ANILLO O	1					
5	64E–43817–00	FILTER 2 FIELTRO 2	1					
6	64E–43810–00	TILT PISTON SUB ASSY ELEVADOR SUB-PISTON COMPL.	1					
7	64E–43898–00	.SEAL ,DUST 2 .SELLO ANTIPOLVO	1					
8	64E–43867–00	.O-RING .ANILLO EN O 7	1					
9	64E–43866–00	.O-RING .ANILLO EN O 6	1					
10	6E5–43862–00	.O-RING .ANILLO EN O 2	1					
11	64E–43883–00	.O-RING .ANILLO EN O 10	1					
12	6E5–43872–00	RING, BACK UP ANILLO	1					
13	6E5–43814–02	PISTON, FREE PISTON LIBRE	1					
14	6E5–43862–00	O-RING ANILLO EN O 2	1					
15	64E–43820–00	TRIM PISTON SUB ASSY ELEVADOR PISTON COMPL.	2					
16	64E–43821–00	.SCREW, TRIM CYLINDER END .TORNILLO CILINDURO EXTREMO	1					
17	64E–43822–00	.SEAL, TRIM DUST .SELLO DE POLVO	1					
18	64E–4384J–00	.SEAL, TRIM DOWN .SELLO	1					
19	6G5–43864–00	.O-RING .ANILLO EN O 4	1					
20	6E5–43864–00	O-RING ANILLO EN O 4	2					
21	6E5–43874–01	RING, BACK UP ANILLO	2					
22	64E–43828–00	BODY, RESERVOIR CUERPO DEPOSITO	1					
23	64E–43829–00	PLUG, RESERVOIR TAPON DEPOSITO	1					
24	64E–43897–00	O-RING ANILLO EN O	1					
25	64E–4388E–00	BOLT ,SCREW (L:14MM) PERNO (L:14MM)	3					
26	64E–43869–00	O-RING ANILLO EN O 9	6					
27	64E–4381G–00	PIN PASADOR 1	1					

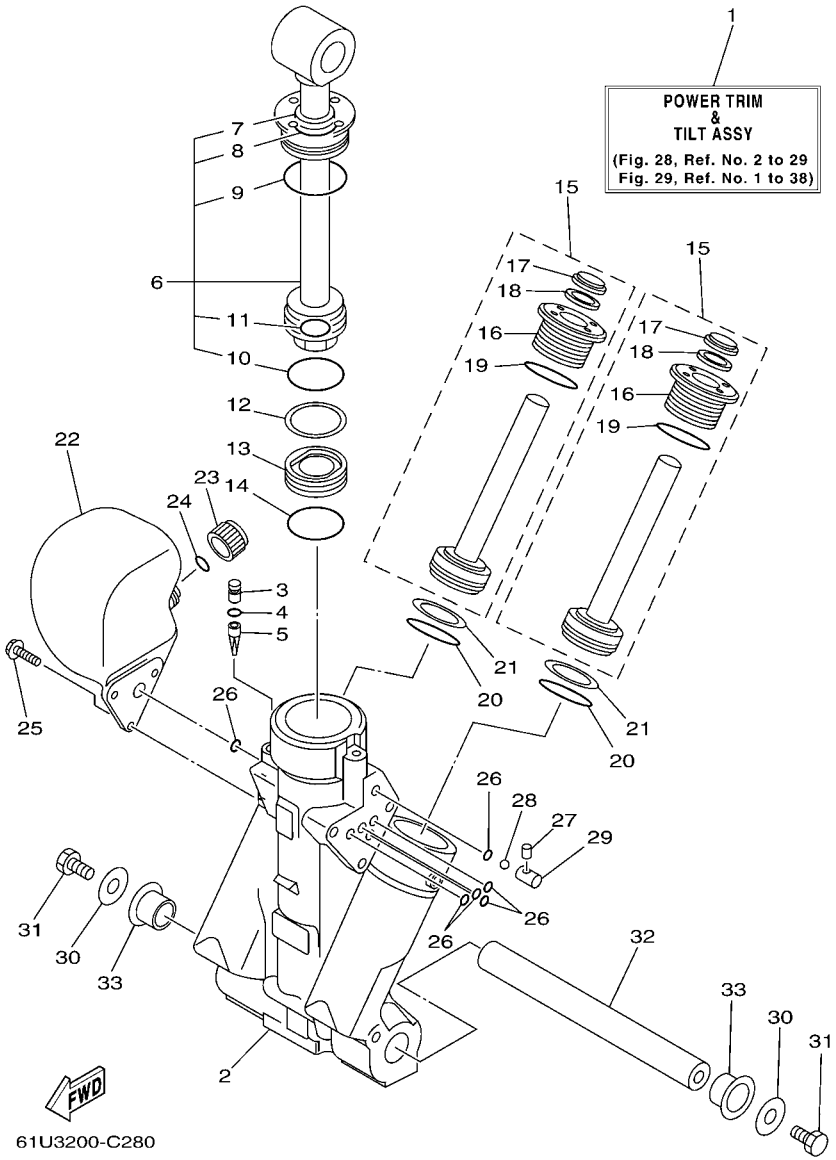

FIG. 28 POWER TRIM & TILT ASSY 1 COMPONER Y PODER VARILLA 1

REF. NO.	PART NO. CODIGO Nº	DESCRIPTION DESCRIPCION	ET	E	WH	MH		REMARKS OBSERVACIONES
28	6E5–43858–00	BALL ESFERA	1					
29	64E–4382G–00	VALVE, SEAT JUEGO ASIENTO VALVULA	1					
30	90201–08M14	WASHER, PLATE ARANDELA PLANA	2					
31	97080–08016	BOLT PERNO	2					
32	64E–43818–01	PIN, LOWER SHOCK MOUNT PASADOR AMORTIGUADOR INFERIOR	1					
33	90386–22M98	BUSH BUJE	2					

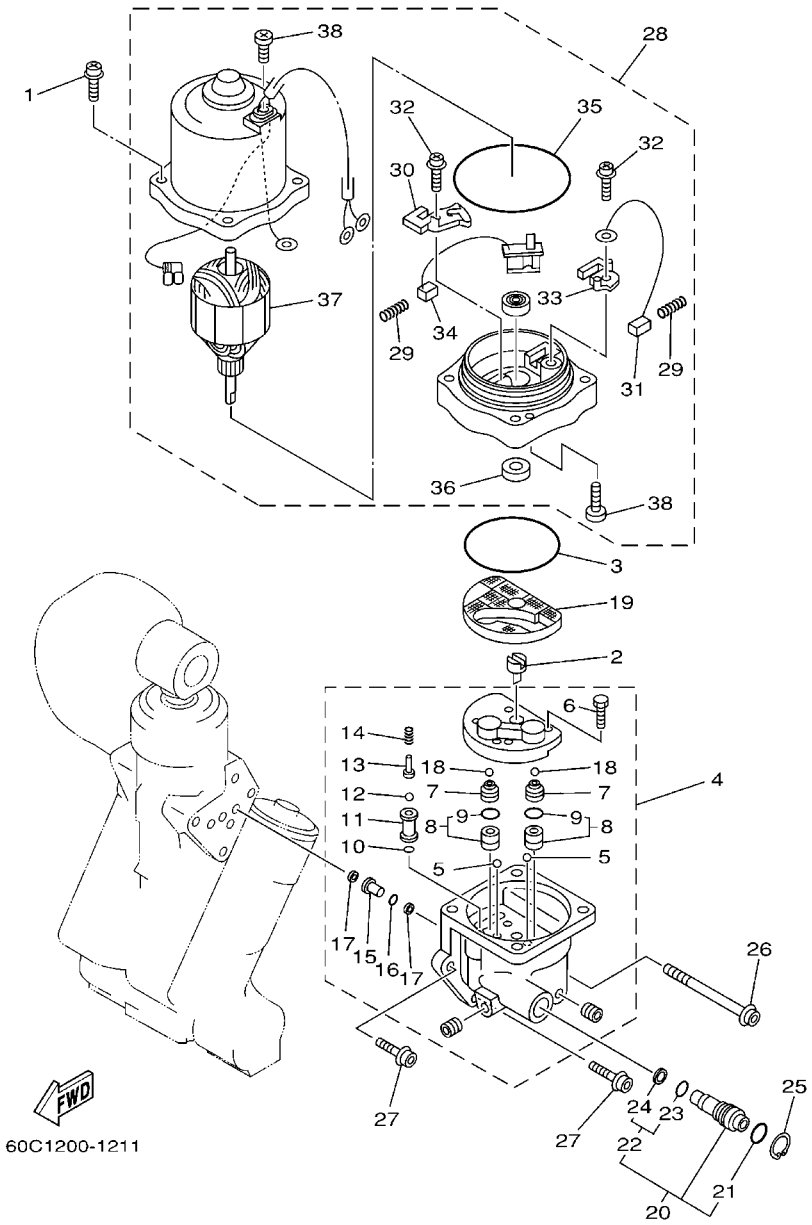

FIG. 29 POWER TRIM & TILT ASSY 2 COMPONER Y PODER VARILLA 2

REF. NO.	PART NO. CODIGO Nº	DESCRIPTION DESCRIPCION	ET	E	WH	MH		REMARKS OBSERVACIONES
1	64E–4388E–10	BOLT ,SCREW (L:34.7MM) PERNO (L:34.7MM)	4					
2	64E–43831–00	CONNECTOR, SHAFT CONEXION EJE	1					
3	64E–43868–00	O-RING ANILLO EN O 8	1					
4	64E–43830–00	GEAR PUMP ASSY ENGRANAJE BOMBA COMPL.	1					
5	72X–43858–00	.BALL .ESFERA	2					
6	64E–43843–00	.SCREW, VALVE LOCK .TORNILLO	4					
7	64E–43841–00	.PISTON, SHUTTLE .PISTON	2					
8	64E–43802–00	.VALVE SUB ASSY .VALVULA PRINCIPAL COMPL.	2					
9	6E5–43896–00	..O-RING ..ANILLO EN O	1					
10	6G5–43863–00	.O-RING .ANILLO EN O 3	1					
11	64E–43851–00	.SEAT, RELIEF VALVE .ASIENTO VALVULA DE DESCARGA	1					
12	64E–43858–00	.BALL .ESFERA	1					
13	64E–43859–00	.PIN, VALVE SUPPORT .PASADOR VALVULA SOPORTE	1					
14	64E–43855–00	.SPRING, UP RELIEF .RESORTE SEGURIDAD SUPERIOR	1					
15	64E–43850–00	.VALVE SUB ASSY .VALVULA COMPL	1					
16	64E–43865–00	.O-RING .ANILLO EN O 5	1					
17	64E–43816–00	.FILTER 1 .FIELTRO 1	2					
18	64E–43858–00	.BALL .ESFERA	2					
19	64E–43817–10	FILTER 2 FIELTRO 2	1					
20	64E–43860–00	MANUAL VALVE SUB-ASSY VALVULA SUB-COMPL.	1					
21	72X–85075–L0	.O-RING .ANILLO EN O 5	1					
22	64E–43827–00	.RING SET .ESFERA	1					
23	64E–4387A–00	..O-RING ..ANILLO O	1					
24	64E–43873–00	..RING, BACK UP ..ANILLO	1					
25	64E–43875–00	RING, SNAP ANILLO	1					
26	64E–43879–10	SCREW, WITH WASHER TORNILLO CON RONDANA	1					
27	64E–43879–00	SCREW, WITH WASHER TORNILLO CON RONDANA	2					

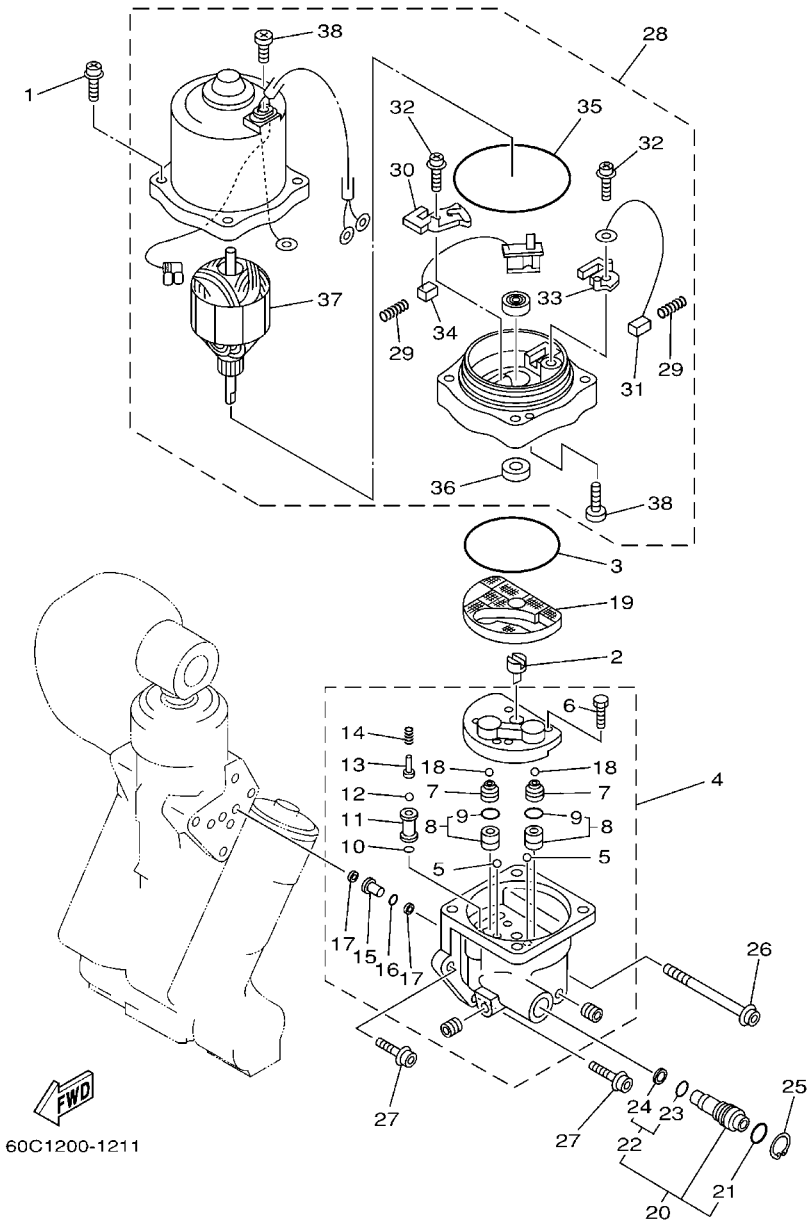

FIG. 29 POWER TRIM & TILT ASSY 2 COMPONER Y PODER VARILLA 2

REF. NO.	PART NO. CODIGO Nº	DESCRIPTION DESCRIPCION	ET	E	WH	MH		REMARKS OBSERVACIONES
28	64E–43880–01	MOTOR ASSY MOTOR COMPL.	1					
29	6H1–4386K–10	.SPRING, BRUSH .RESORTE, ESCOBILLA	2					
30	64E–4380J–00	.HOLDER, BRUSH .PORTAESCOBILLA	1					
31	64E–43891–00	.BRUSH 1 .ESCOBILLA 1	1					
32	97607–04310	.SCREW,WITH WASHER .TORNILLO CAB CON PLANA C/ARAN	2					
33	64E–4380F–00	.HOLDER, BRUSH 2 .PORTAESCOBILLA 2	1					
34	64E–43892–00	.BRUSH 2 .ESCOBILLA 2	1					
35	6G5–43865–00	.O-RING .ANILLO EN O 5	1					
36	93102–08M43	.OIL SEAL .SELLO ACEITE	1					
37	64E–43805–00	.ARMATURE ASSY .INDUCIDO COMPL.	1					
38	64E–43843–10	.SCREW, VALVE LOCK .TORNILLO	3					

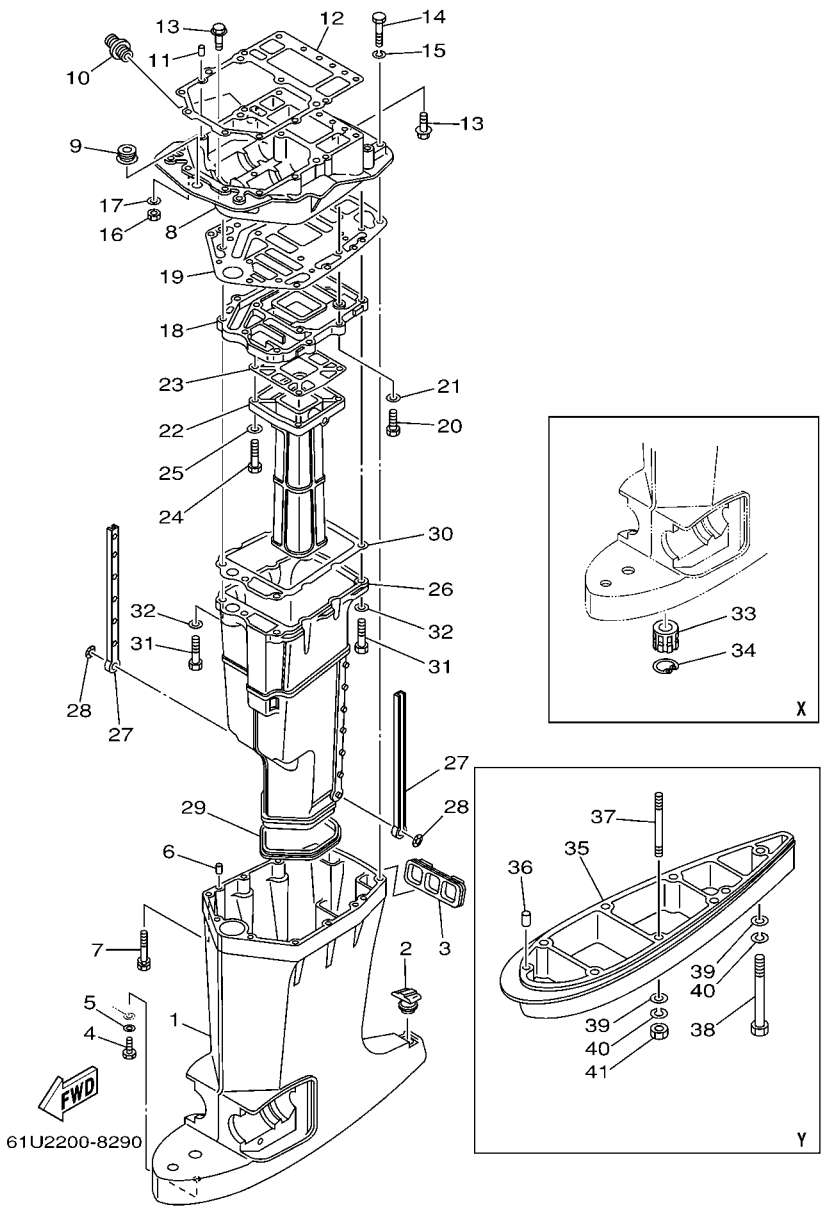

FIG. 30 UPPER CASING — FUNDA SUPERIOR

REF. NO.	PART NO. CODIGO Nº	DESCRIPTION DESCRIPCION	ET	E	WH	MH		REMARKS OBSERVACIONES
1	6E5–45111–02–8D	CASING, UPPER CAJA SUPERIOR	1	1	1	1		L/Y L/Y
	6E5–45111–23–8D	CASING, UPPER CAJA SUPERIOR	1	1	1	1		X X
2	6E5–45155–00	CAP TAPA	1	1	1	1		
3	6E5–42769–00	SEAL, RUBBER SELLO DE GOMA	1	1	1	1		
4	97095–06010	BOLT PERNO	1	1	1	1		
5	92995–06600	WASHER ARANDELA	1	1	1	1		
6	93608–12M05	PIN, DOWEL PASADOR DE CLAVIJA	2	2	2	2		
7	90119–08027	BOLT, WITH WASHER TORNILLO CON ARANDELA	6	6	6	6		
8	6E5–41137–03–94	GUIDE, EXHAUST GUIA DE ESCAPE	1	1	1	1		
9	6E5–42724–00	GROMMET TAPON	1	1	1	1		
10	6G5–12581–00	JOINT, HOSE 1 CONEXION	1	1	1	1		
11	93608–12M05	PIN, DOWEL PASADOR DE CLAVIJA	2	2	2	2		
12	6E5–45113–A0	GASKET, UPPER CASING EMPAQUE	1	1	1	1		
13	90119–08M79	BOLT, WITH WASHER TORNILLO CON ARANDELA	6	6	6	6		
14	97095–08045	BOLT PERNO	2	2	2	2		
15	92995–08100	WASHER ARANDELA	2	2	2	2		
16	95380–08700	NUT TUERCA	2	2	2	2		
17	92995–08100	WASHER ARANDELA	2	2	2	2		
18	6E5–41131–01–5B	MANIFOLD, EXT. 1 TUBO MULTIPLE DE ESCAPE	1	1	1	1		
	6E5–41131–10–5B	MANIFOLD, EXT. 1 TUBO MULTIPLE DE ESCAPE	1	1				FOR NME FOR NME
19	6E5–45114–A0	GASKET, UPPER CASING EMPAQUE	1	1	1	1		
20	97095–08030	BOLT PERNO	4	4	4	4		
21	92995–08600	WASHER ARANDELA	4	4	4	4		
22	6E5–41132–00–5B	MANIFOLD, EXHAUST TUBO MULTIPLE DE ESCAPE	1	1	1	1		
	6E5–41132–20–5B	MANIFOLD, EXHAUST TUBO MULTIPLE DE ESCAPE	1	1				FOR NME FOR NME
23	6E5–41134–B0	GASKET, EXHAUST MANIFOLD EMPAQUE	1	1	1	1		
24	97095–08045	BOLT PERNO	4	4	4	4		

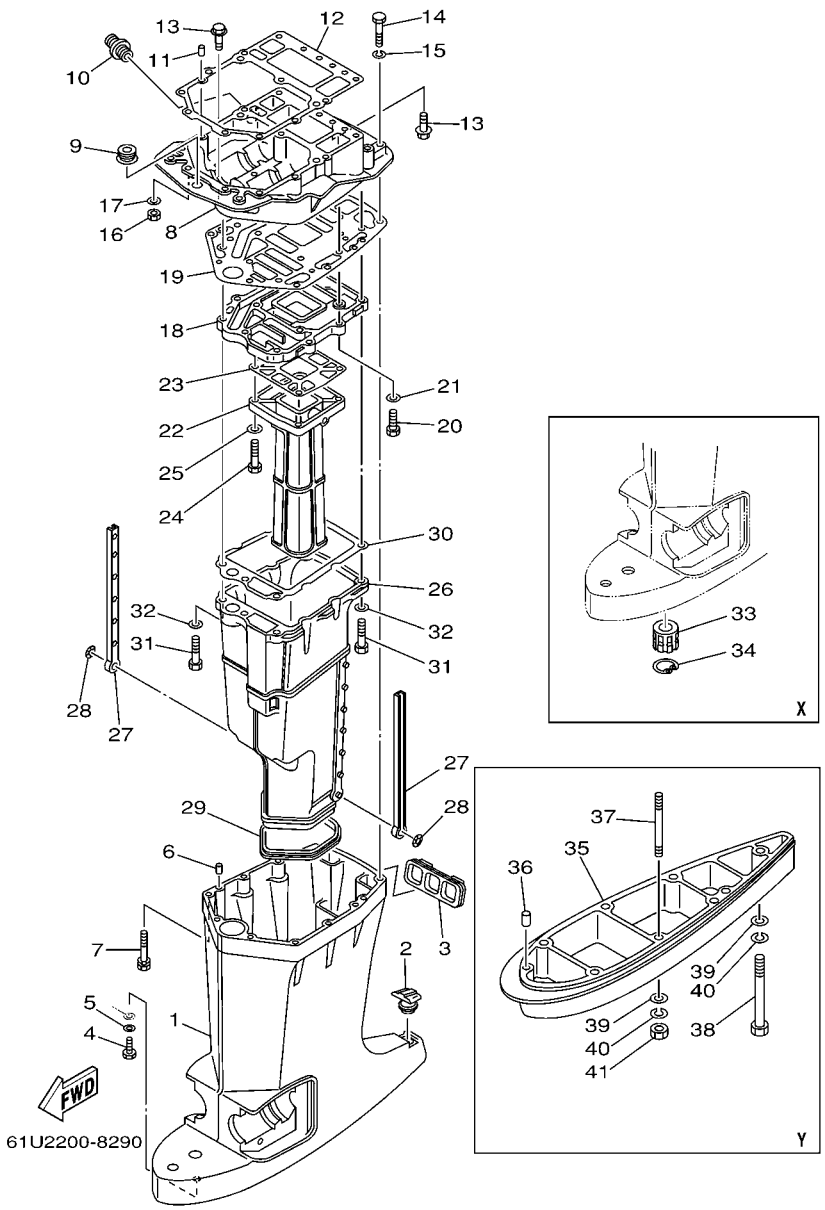

FIG. 30 UPPER CASING — FUNDA SUPERIOR

REF. NO.	PART NO. CODIGO Nº	DESCRIPTION DESCRIPCION	ET	E	WH	MH		REMARKS OBSERVACIONES
25	92995–08600	WASHER ARANDELA	4	4	4	4		
26	6E5–14711–01–5B	MUFFLER 1 SILENCIADOR 1	1	1	1	1		
	6E5–14711–10–5B	MUFFLER 1 SILENCIADOR 1	1	1				FOR NME FOR NME
27	6E5–14737–00	DAMPER, MUFFLER AMORTIGUADOR DE SILENCIADOR	2	2	2	2		
28	90183–05M02	NUT, SPRING TUERCA DE RESORTE	2	2	2	2		
29	6E5–45123–00	GASKET, MUFFLER EMPAQUE SILENCIADOR	1	1	1	1		
30	6E5–41135–A0	GASKET, EXHAUST MANIFOLD EMPAQUE	1	1	1	1		
31	97095–08045	BOLT PERNO	5	5	5	5		
32	92995–08600	WASHER ARANDELA	5	5	5	5		
33	6E5–45318–00	BUSHING, DRIVE SHAFT BUJE, EJE DE MANDO	1	1	1	1		X X
34	93420–36M01	CIRCLIP SEGURO	1	1	1	1		X X
35	6E5–45211–00–4D	EXTENSION EXTENSION			1	1		Y Y
36	93608–12M05	PIN, DOWEL PASADOR DE CLAVIJA			4	4		Y Y
37	90116–10M38	BOLT, STUD ESPARRAGO			6	6		Y Y
38	90101–10M02	BOLT TORNILLO			1	1		Y Y
39	92990–10600	WASHER, PLATE ARANDELA PLANA			7	7		Y Y
40	92990–10100	WASHER, SPRING ARANDELA PLANA			7	7		Y Y
41	95380–10600	NUT TUERCA			6	6		Y Y

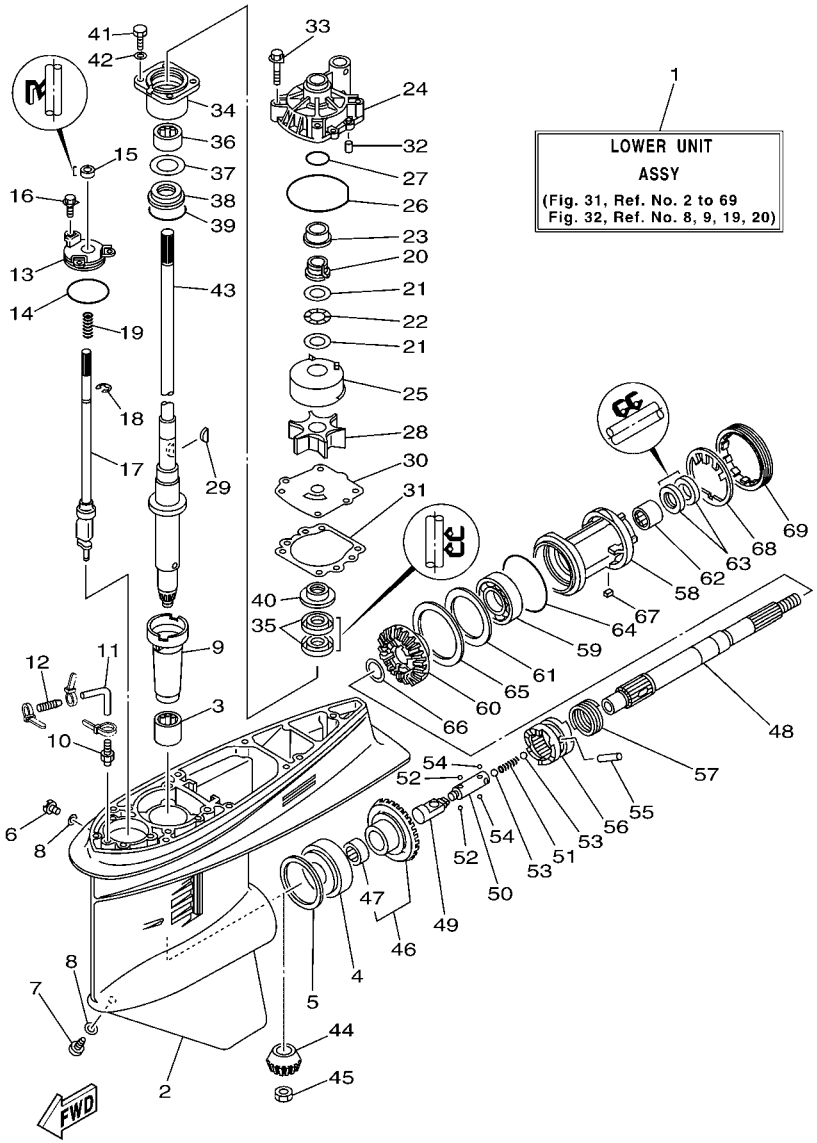

FIG. 31 LOWER CASING & DRIVE 1 IMPULSOR E INFERIOR 1

REF. NO.	PART NO. CODIGO Nº	DESCRIPTION DESCRIPCION	ET	E	WH	MH		REMARKS OBSERVACIONES
1	61U–45300–13–8D	LOWER UNIT ASSY CONJUNTO UNIDAD INFERIOR	1	1	1	1		L L
	61U–45300–33–8D	LOWER UNIT ASSY CONJUNTO UNIDAD INFERIOR			1	1		Y Y
	61U–45300–23–8D	LOWER UNIT ASSY CONJUNTO UNIDAD INFERIOR	1	1	1	1		X X
2	6E5–45301–05–8D	CASING, LOWER FUNDA INFERIOR COMPLETA	1	1	1	1		
3	93315–628U9	BEARING COJINETE DE RODILLOS	1	1	1	1		
4	93332–000U7	BEARING COJINETE	1	1	1	1		
5	6E5–45567–01–10	SHIM (T:0.10MM) LAMINA(T:0.10MM)	1	1	1	1		UR UR
	6E5–45567–01–12	SHIM (T:0.12MM) LAINA (T:0.12MM)	1	1	1	1		UR UR
	6E5–45567–01–15	SHIM (T:0.15MM) LAINA (T:0.15MM)	1	1	1	1		UR UR
	6E5–45567–01–18	SHIM (T:0.18MM) LAINA (T:0.18MM)	1	1	1	1		UR UR
	6E5–45567–01–30	SHIM (T:0.30MM) LAINA (T:0.30MM)	1	1	1	1		UR UR
	6E5–45567–01–40	SHIM (T:0.40MM) LAINA (T:0.40MM)	1	1	1	1		UR UR
	6E5–45567–01–50	SHIM (T:0.50MM) LAINA (T:0.50MM)	1	1	1	1		UR UR
6	90340–08002	PLUG, STRAIGHT SCREW TORNILLO, DE DRENAJE	1	1	1	1		
7	688–45341–10	PLUG, DRAIN TAPON, DREN	1	1	1	1		
8	90430–08020	GASKET JUNTA	2	2	2	2		
9	6E5–45536–00	SLEEVE, DRIVE SHAFT CAMISA EJE DE MANDO	1	1	1	1		
10	6E5–45378–00	NIPPLE, HOSE NIPLE MANGUERA	1	1	1	1		
11	90445–07ME8	HOSE (L80) TUBO (L80)	1	1	1	1		L L
	90445–07ME9	HOSE (L120) TUBO (L120)	1	1	1	1		Y/X Y/X
12	6E5–83558–10	END, NIPPLE EXTREMO DE NIPLE	1	1	1	1		
	6E5–83558–00	END, NIPPLE EXTREMO DE NIPLE	1	1				FOR TUNA FOR TUNA
13	6E5–45321–00	PLATE PLACA	1	1	1	1		
14	93210–58144	O-RING ANILLO O	1	1	1	1		
15	93106–09014	OIL SEAL RETEN DE ACEITE	1	1	1	1		
16	90119–06M10	BOLT, WITH WASHER TORNILLO CON ARANDELA	3	3	3	3		
17	6E5–44150–02	SHIFT CAM ASSY CONJUNTO EJE LEVA COMPL.	1	1	1	1		

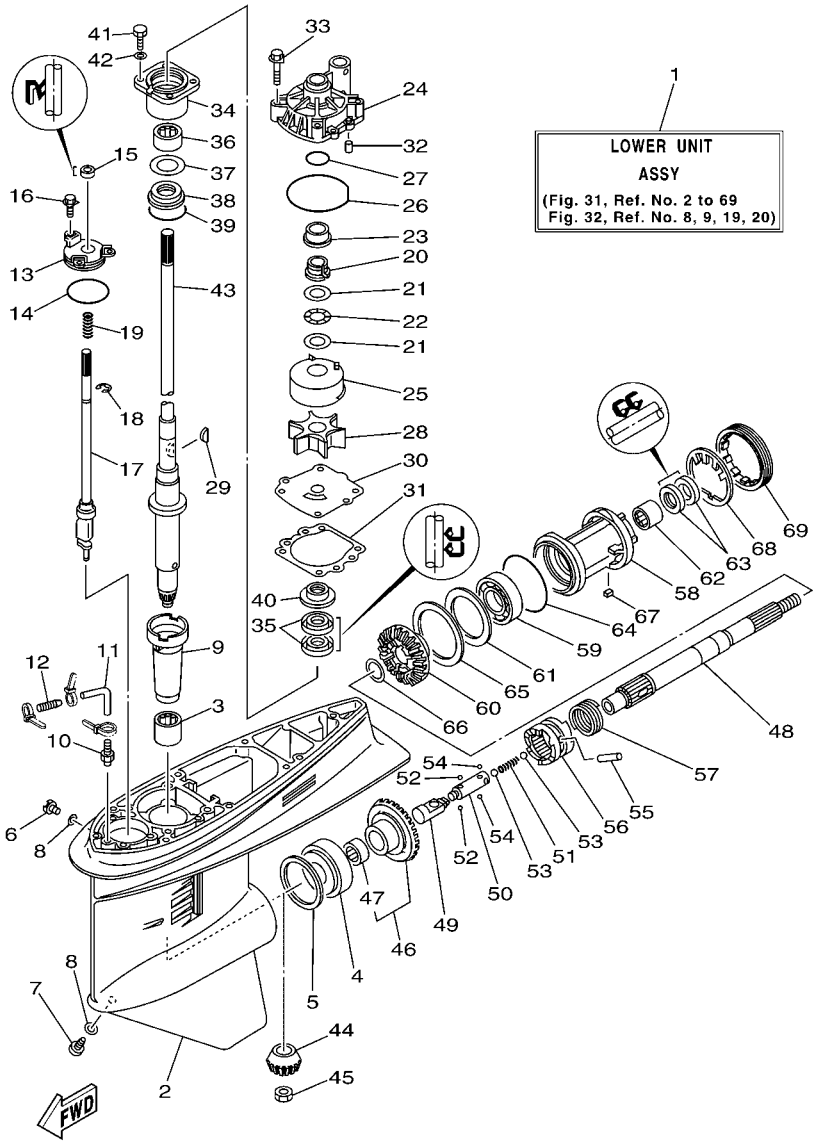

FIG. 31 LOWER CASING & DRIVE 1 IMPULSOR E INFERIOR 1

REF. NO.	PART NO. CODIGO Nº	DESCRIPTION DESCRIPCION	ET	E	WH	MH		REMARKS OBSERVACIONES
18	99001–08600	CIRCLIP PRESILLA REDONDA	1	1	1	1		
19	90501–11M10	SPRING, COMPRESSION RESORTE DE COMPRESION	1	1	1	1		
20	61A–45538–00	SPACER 1 ESPACIADOR 1	1	1	1	1		
21	90201–22M01	WASHER, PLATE ARANDELA PLANA	2	2	2	2		
22	90206–22M19	WASHER, WAVE ARANDELA ONDULADA	1	1	1	1		
23	61A–45527–00	COLLAR, DRIVE SHAFT COLLAR EJE FLECHA DE PROPULSIO	1	1	1	1		
24	61A–44311–01	HOUSING, WATER PUMP CAJA BOMBA DE AGUA	1	1	1	1		
25	6R3–44322–42	INSERT, CARTRIDGE CARTUCHO	1	1	1	1		FOR CHROMATE FOR CHROMATE
26	93210–86M38	O-RING ANILLO O	1	1	1	1		
27	93210–37160	O-RING ANILLO O	1	1	1	1		
28	6E5–44352–01	IMPELLER IMPULSOR	1	1	1	1		
29	90280–04M05	KEY, WOODRUFF CUNA WOODRUFF	1	1	1	1		
30	6E5–44323–40	OUTER PLATE, CARTRIDGE PLACA EXTERIOR DEL CARTUCHO	1	1	1	1		FOR CHROMATE FOR CHROMATE
31	6E5–44315–A0	GASKET, WATER PUMP EMPAQUE	1	1	1	1		
32	93606–12019	PIN, DOWEL PASADOR DE CLAVIJA	2	2	2	2		
33	90119–08M14	BOLT, WITH WASHER TORNILLO CON ARANDELA	4	4	4	4		
34	6E5–45331–00–94	HOUSING, BEARING CAJA DE COJINETE	1	1	1	1		
35	93101–28M16	OIL SEAL SELLO ACEITE	2	2	2	2		
36	93317–330U2	BEARING COJINETE	1	1	1	1		
37	6E5–45587–01–10	SHIM (T:0.10MM) LAINA (T:0.10MM)	1	1	1	1		UR UR
	6E5–45587–01–12	SHIM (T:0.12MM) LAINA (T:0.12MM)	1	1	1	1		UR UR
	6E5–45587–01–15	SHIM (T:0.15MM) LAINA (T:0.15MM)	1	1	1	1		UR UR
	6E5–45587–01–18	SHIM (T:0.18MM) LAINA (T:0.18MM)	1	1	1	1		UR UR
	6E5–45587–01–30	SHIM (T:0.30MM) LAINA (T:0.30MM)	1	1	1	1		UR UR
	6E5–45587–01–40	SHIM (T:0.40MM) LAINA (T:0.40MM)	1	1	1	1		UR UR
	6E5–45587–01–50	SHIM (T:0.50MM) LAINA (T:0.50MM)	1	1	1	1		UR UR
38	93341–930V2	BEARING COJINETES CON RODAMIENTOS	1	1	1	1		

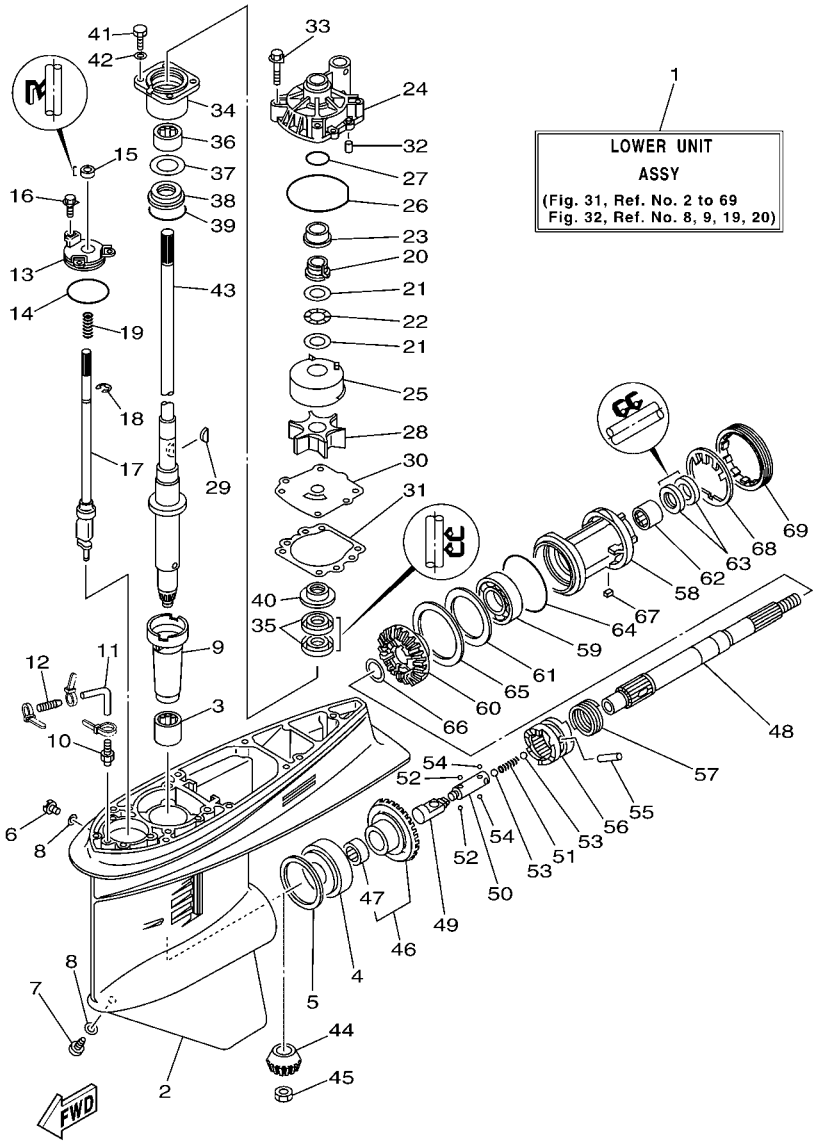

FIG. 31 LOWER CASING & DRIVE 1 IMPULSOR E INFERIOR 1

REF. NO.	PART NO. CODIGO Nº	DESCRIPTION DESCRIPCION	ET	E	WH	MH		REMARKS OBSERVACIONES
39	93210–55M14	O-RING ANILLO O	1	1	1	1		
40	6E5–45344–00	COVER, OIL SEAL CUBIERTA SELLO ACEITE	1	1	1	1		
41	97095–08025	BOLT PERNO	4	4	4	4		
42	92995–08600	WASHER ARANDELA	4	4	4	4		
43	6E5–45501–01	DRIVE SHAFT COMP. EJE DE MANDO COMPL.	1	1	1	1		L L
	6E5–45501–11	DRIVE SHAFT COMP. EJE DE MANDO COMPL.			1	1		Y Y
	6E5–45501–21	DRIVE SHAFT COMP. EJE DE MANDO COMPL.	1	1	1	1		X X
44	6E5–45551–02	PINION PINON	1	1	1	1		
45	90170–16M01	NUT TUERCA	1	1	1	1		
46	6E5–45560–01	GEAR ENGRANE COMPLE 1	1	1	1	1		
47	93315–425U7	.BEARING .COJINETE DE RODILLOS	1	1	1	1		
48	6E5–45611–01	SHAFT, PROPELLER EJE PROPUSOR	1	1	1	1		
49	6E5–45641–03	SHIFTER CAMBIO	1	1	1	1		
50	6E5–45634–01	SLIDE, SHIFT DESLIZADOR, CAMBIO	1	1	1	1		
51	90501–16M37	SPRING, COMPRESSION RESORTE DE COMPRESION	1	1	1	1		
52	93507–32009	BALL ESFERA	2	2	2	2		
53	93511–32017	BALL ESFERA	2	2	2	2		
54	93503–16003	BALL ESFERA	2	2	2	2		
55	90250–08M07	PIN, STRAIGHT PASADOR CILINDRICO	1	1	1	1		
56	6E5–45631–01	CLUTCH, DOG EMBRAGUE DE GARRA	1	1	1	1		
57	6E5–45633–01	RING, CROSS PIN ANILLO DE PASADOR	1	1	1	1		
58	6E5–45332–00–94	HOUSING, BEARING CAJA BALERO 2	1	1	1	1		
59	93306–208U0	BEARING COJINETE	1	1	1	1		
60	6E5–45571–01	GEAR ENGRANAJE	1	1	1	1		
61	6E5–45576–00	WASHER, THRUST ARANDELA DE EMPUJE AXIAL	1	1	1	1		
62	93315–43061	BEARING COJINETE DE RODILLOS	1	1	1	1		
63	93101–30M17	OIL SEAL SELLO ACEITE	2	2	2	2		

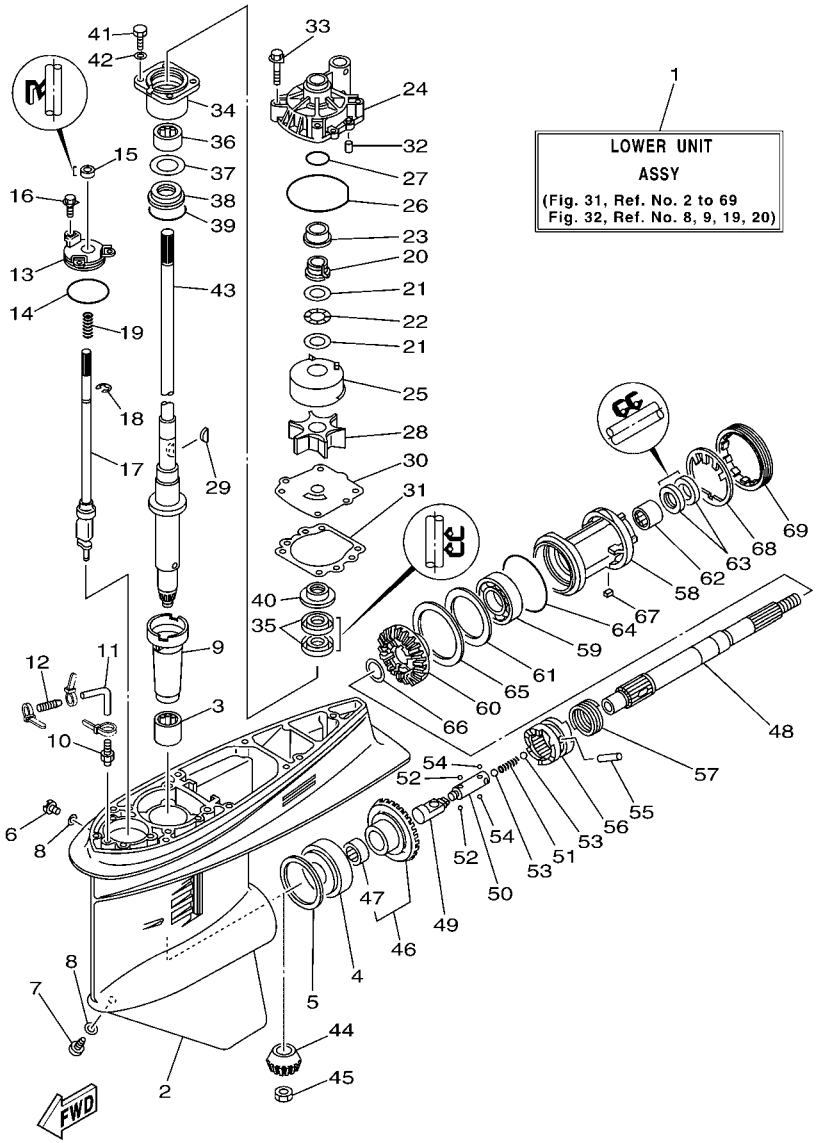

FIG. 31 LOWER CASING & DRIVE 1 IMPULSOR E INFERIOR 1

REF. NO.	PART NO. CODIGO Nº	DESCRIPTION DESCRIPCION	ET	E	WH	MH		REMARKS OBSERVACIONES
64	93210–86M39	O-RING ANILLO O	1	1	1	1		
65	6L6–45577–00–10	SHIM (T:0.10MM) LAINA (T:0.10MM)	1	1	1	1		UR UR
	6L6–45577–00–12	SHIM (T:0.12MM) LAINA (:0.12MM)	1	1	1	1		UR UR
	6L6–45577–00–15	SHIM (T:0.15MM) LAINA (T:0.15MM)	1	1	1	1		UR UR
	6L6–45577–00–18	SHIM (T:0.18MM) LAINA (T:0.18MM)	1	1	1	1		UR UR
	6L6–45577–00–30	SHIM (T:0.30MM) LAINA (T:0.30MM)	1	1	1	1		UR UR
	6L6–45577–00–40	SHIM (T:0.40MM) LAINA (T:0.40MM)	1	1	1	1		UR UR
	6L6–45577–00–50	SHIM (T:0.50MM) LAINA (T:0.50MM)	1	1	1	1		UR UR
66	90201–30M92	WASHER, PLATE ARANDELA PLANA	1	1	1	1		
67	90282–04010	KEY, STRAIGHT CHAVETA, RECTA	1	1	1	1		
68	688–45383–02	WASHER, CLAW ARANDELA DE UNA	1	1	1	1		
69	688–45384–00	NUT TUERCA	1	1	1	1		

FIG. 32 LOWER CASING & DRIVE 2 IMPULSOR E INFERIOR 2

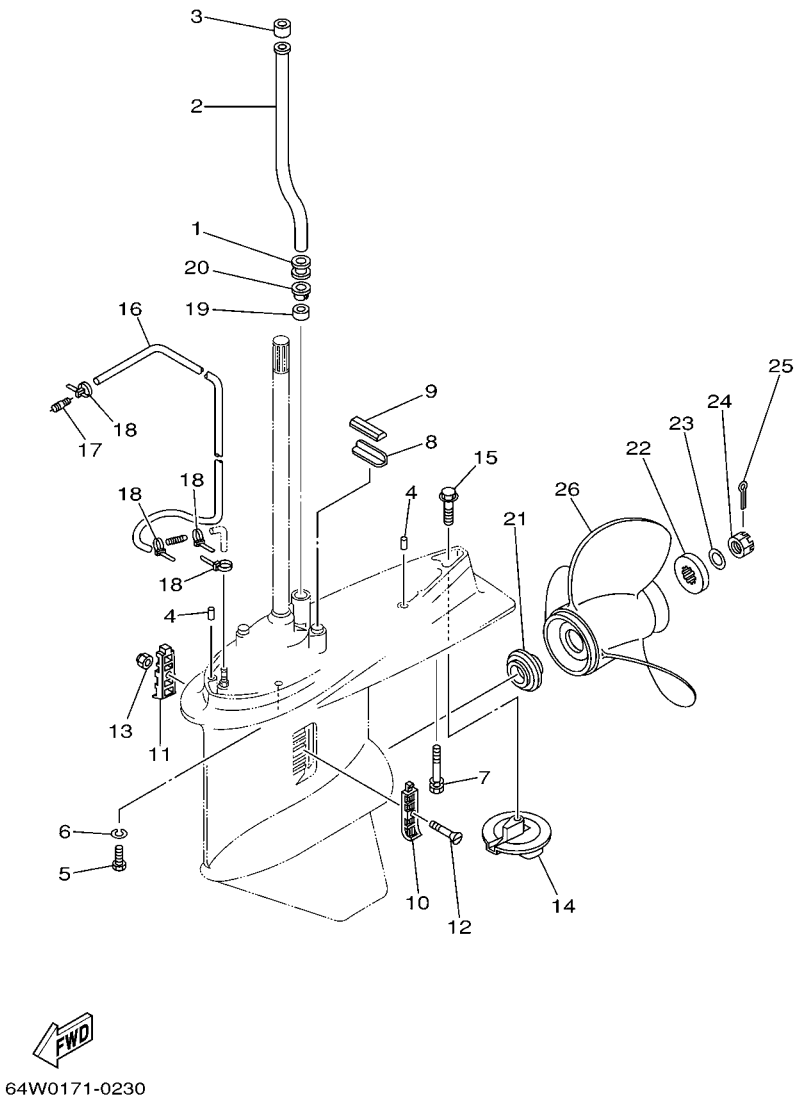

REF. NO.	PART NO. CODIGO Nº	DESCRIPTION DESCRIPCION	ET	E	WH	MH		REMARKS OBSERVACIONES
1	6E5–44366–00	DAMPER, WATER SEAL GOMA DEL SELLO DE AGUA	1	1	1	1		
2	6E5–44361–00	TUBE, WATER TUBO DE AGUA	1	1	1	1		L L
	6E5–44361–10	TUBE, WATER TUBO DE AGUA			1	1		Y Y
	6E5–44361–20	TUBE, WATER TUBO DE AGUA	1	1	1	1		X X
3	6E5–44365–00	DAMPER, WATER SEAL HULE DE SELLO DE AGUA	1	1	1	1		
4	93608–12M05	PIN, DOWEL PASADOR DE CLAVIJA	2	2	2	2		L/X L/X
5	97075–10045	BOLT PERNO	6	6	6	6		L/X L/X
6	92995–10100	WASHER ARANDELA	6	6	6	6		L/X L/X
7	90119–10M89	BOLT, WITH WASHER TORNILLO CON ARANDELA	1	1	1	1		L/X L/X
8	663–45376–00–94	GUIDE, SEAL DAMPER GUIA DE SELLO GOMA	1	1	1	1		
9	688–45375–00	DAMPER, SEAL GOMA DE SELLO	1	1	1	1		
10	688–45214–02	COVER, WATER INLET CUBIERTA ENTRADA AGUA	1	1	1	1		
11	688–45215–02	COVER, WATER INLET CUBIERTA ENTRADA AGUA	1	1	1	1		
12	90152–05M07	SCREW, COUNTERSUNK TORNILLO EMBUTIDO	1	1	1	1		
13	90185–05002	NUT, SELF-LOCKING TUERCA AUTOBLOCANTE	1	1	1	1		
14	6E5–45371–01	TAB-TRIM QUILLA ESTABILIZADOR	1	1	1	1		
15	90105–10M00	BOLT, FLANGE TORNILLO	1	1	1	1		
16	90445–07MF0	HOSE (L1030) TUBO (L1030)	1	1	1	1		EXCEPT FOR TUNA EXCEPT FOR TUNA
17	6E5–83558–00	END, NIPPLE EXTREMO DE NIPLE	1	1	1	1		EXCEPT FOR TUNA EXCEPT FOR TUNA
18	90465–11M10	CLAMP BRIDA	4	4	4	4		
	90465–11M10	CLAMP BRIDA	2	2				FOR TUNA FOR TUNA
19	6E5–44365–00	DAMPER, WATER SEAL HULE DE SELLO DE AGUA	1	1	1	1		
20	6E5–44312–00	COVER, WATER PUMP HOUSING CUBIERTA CAJA BOMBA DE AGUA	1	1	1	1		
21	6E5–45987–01	SPACER ESPACIADOR	1	1	1	1		
22	688–45997–01	SPACER ESPACIADOR	1	1	1	1		
23	92990–18200	WASHER ARANDELA PLANA	1	1	1	1		
24	90171–18M04	NUT, CASTLE TUERCA ENTALLADA	1	1	1	1		

FIG. 32 LOWER CASING & DRIVE 2 IMPULSOR E INFERIOR 2

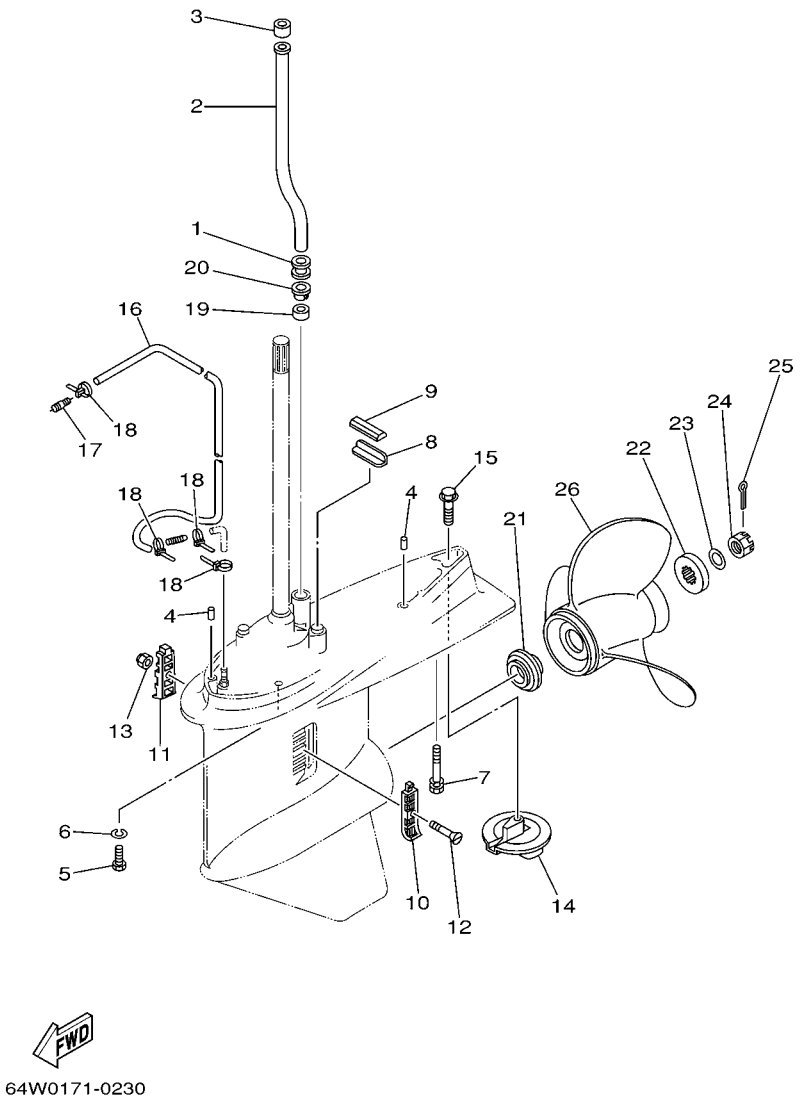

REF. NO.	PART NO. CODIGO Nº	DESCRIPTION DESCRIPCION	ET	E	WH	MH		REMARKS OBSERVACIONES
25	91490–40030	PIN, COTTER CHAVETA	1	1	1	1		
26	6E5–45943–00–EL	PROPELLER (3X12-5/8"X21"-K) PROPELA (3X12-5/8"X21"-K)	1	1	1	1		UR UR
	6E5–45945–01–EL	PROPELLER (3X13-1/4"X17"-K) PROPELA (3X13-1/4"X17"-K)	1	1	1	1		UR UR
	6E5–45947–00–EL	PROPELLER (3X13-1/2"X15"-K) PROPELA (3X13-1/2"X15"-K)	1	1	1	1		UR UR
	688–45941–00–EL	PROPELLER (3X13"X19"-K) PROPELA (3X13"X19"-K)	1	1	1	1		UR UR
	688–45930–02–98	PROPELLER (3X13"X17"-K) PROPELA (3X13"X17"-K)	1	1	1	1		UR UR
	688–45970–03–98	PROPELLER (3X13"X19"-K) PROPELA (3X13"X19"-K)	1	1	1	1		UR UR
	688–45978–60–98	PROPELLER (3X13-1/2"X16"-K) PROPELA (3X13-1/2"X16"-K)	1	1	1	1		UR UR

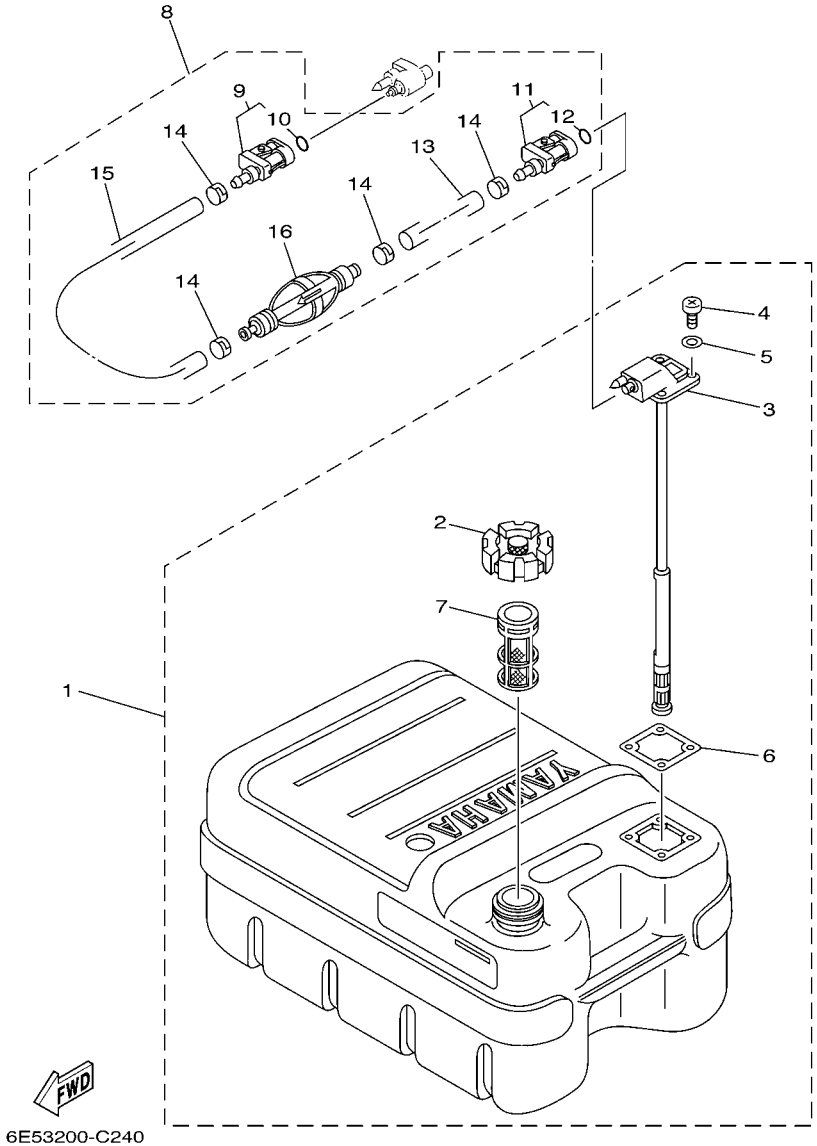

FIG. 33 FUEL TANK — DEPOSITO DE COMBUSTIBLE

REF. NO.	PART NO. CODIGO Nº	DESCRIPTION DESCRIPCION	ET	E	WH	MH		REMARKS OBSERVACIONES
1	6YJ–24201–00	FUEL TANK ASSY (24L) TANQUE DEL COMBUSTIBLE (24L)	1	1	1	1		AP AP
	6YJ–24201–10	FUEL TANK ASSY (24L) TANQUE DEL COMBUSTIBLE (24L)	1					AP FOR CHN AP FOR CHN
2	6YJ–24610–01	.CAP ASSY .TAPA COMPLETA	1	1	1	1		
3	6YJ–24260–00	.FUEL METER ASSY .MEDIDOR DE COMBUSTIBLE COMPL.	1	1	1	1		
	6Y1–24260–12	.FUEL METER ASSY .MEDIDOR DE COMBUSTIBLE COMPL.	1					FOR CHN FOR CHN
4	98586–05016	.SCREW, PAN HEAD .TORNILLO DE CABEZA CON PLANA	4	4	4	4		
5	6Y1–24329–00	.SEAL .SELLO	4	4	4	4		
6	6Y1–24268–00	.GASKET, FUEL METER .EMPAQ MEDIDOR DE COMBUSTIBLE	1	1	1	1		
7	6YJ–24167–00	.STRAINER .COLADOR	1	1	1	1		
8	6Y2–24306–0A	FUEL PIPE COMP. 1 TUBO COMBUST. COMPL 1	1	1	1	1		AP AP
9	6E5–24305–05	.FUEL PIPE JOINT COMP. 2 .CONECTOR MANGUERA COMBUST. 2	1	1	1	1		
10	93210–08287	..O-RING ..ANILLO O	1	1	1	1		
11	6Y2–24305–05	.FUEL PIPE JOINT COMP. 2 .CONECTOR MANGUERA COMBUST. 2	1	1	1	1		
12	93210–08287	..O-RING ..ANILLO O	1	1	1	1		
13	90445–13M01	.HOSE (L2050) .MANGUERA (L2050)	1	1	1	1		
14	6E5–24351–01	.BAND 1 .ABRAZADERA 1	4	4	4	4		
15	90445–13M00	.HOSE (L850) .MANGUERA (L850)	1	1	1	1		
16	61J–24360–11	.PRIMER PUMP ASSY .SOPORTE BOMBA	1	1	1	1		

FIG. 34 STEERING GUIDE DIRECCIONGUIAR

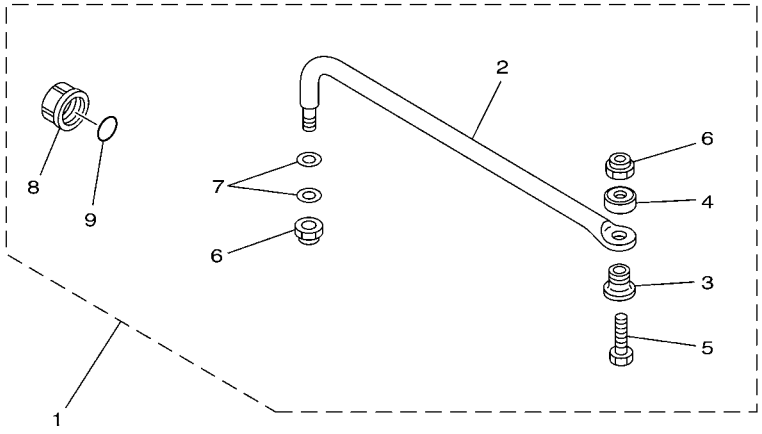

67H0100-9290

REF. NO.	PART NO. CODIGO Nº	DESCRIPTION DESCRIPCION	ET	E	WH	MH		REMARKS OBSERVACIONES
1	6E5–61350–02	STEERING GUIDE ATTACHMENT KIT ESTUCHE ADITAMENTO GUIA DE TIM	1					AP FOR CHN AP FOR CHN
2	6E5–61351–01	.ROD, STEERING LINK .VARILLA ESLABON DIRECCION	1					
3	90387–10M61	.COLLAR .COLLAR	1					
4	90560–12M01	.SPACER .SEPARADOR	1					
5	6E5–61355–00	.BOLT .TORNILLO	1					
6	90185–09M01	.NUT, SELF-LOCKING .TUERCA AUTOBLOCANTE	2					
7	90201–10M20	.WASHER, PLATE .ARANDELA PLANA	2					
8	6E5–43145–01	.CAP, CLAMP BRACKET .TAPA	1					
9	93210–16275	.O-RING .ANILLO O	1					

FIG. 35 REMOTE CONTROL BOX CONTROL REMOTO COMPLETO

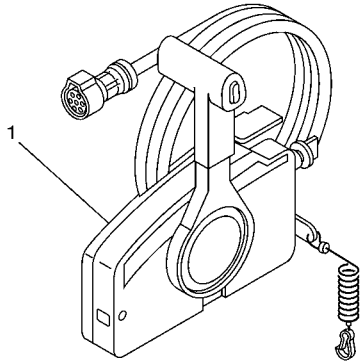

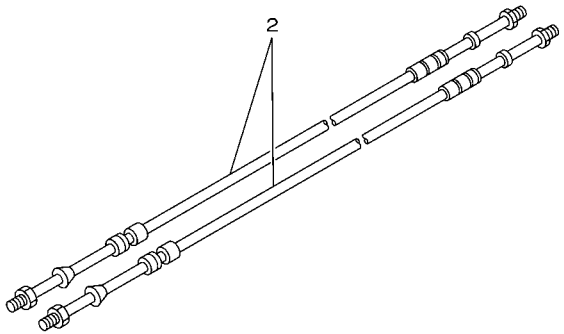

67M0100-8280

REF. NO.	PART NO. CODIGO Nº	DESCRIPTION DESCRIPCION	ET	E	WH	MH		REMARKS OBSERVACIONES
1	703–48205–17	REMOTE CONTROL ASSY (10P) REMOTO CONTROL COMPL. (10P)	1					AP WITH PT/T SW. AP WITH PT/T SW.
	703–48201–16	REMOTE CONTROL ASSY (10P) REMOTO CONTROL COMPL. (10P)		1	1	1		AP AP
2	701–48320–30	CABLE, REMOTE CONTROL L=14F CABLE CONTROL REMOTO L=14F	2	2	2	2		UR UR
	701–48320–50	CABLE, REMOTE CONTROL L=15F CABLE CONTROL REMOTO L=15F	2	2	2	2		UR UR
	701–48320–80	CABLE, REMOTE CONTROL L=17F CABLE CONTROL REMOTO L=17F	2	2	2	2		UR UR
	701–48320–40	CABLE, REMOTE CONTROL L=19F CABLE CONTROL REMOTO L=19F	2	2	2	2		UR UR
	701–48350–30	CABLE, REMOTE CONTROL L=24F CABLE CONTROL REMOTO L=24F	2	2	2	2		UR UR

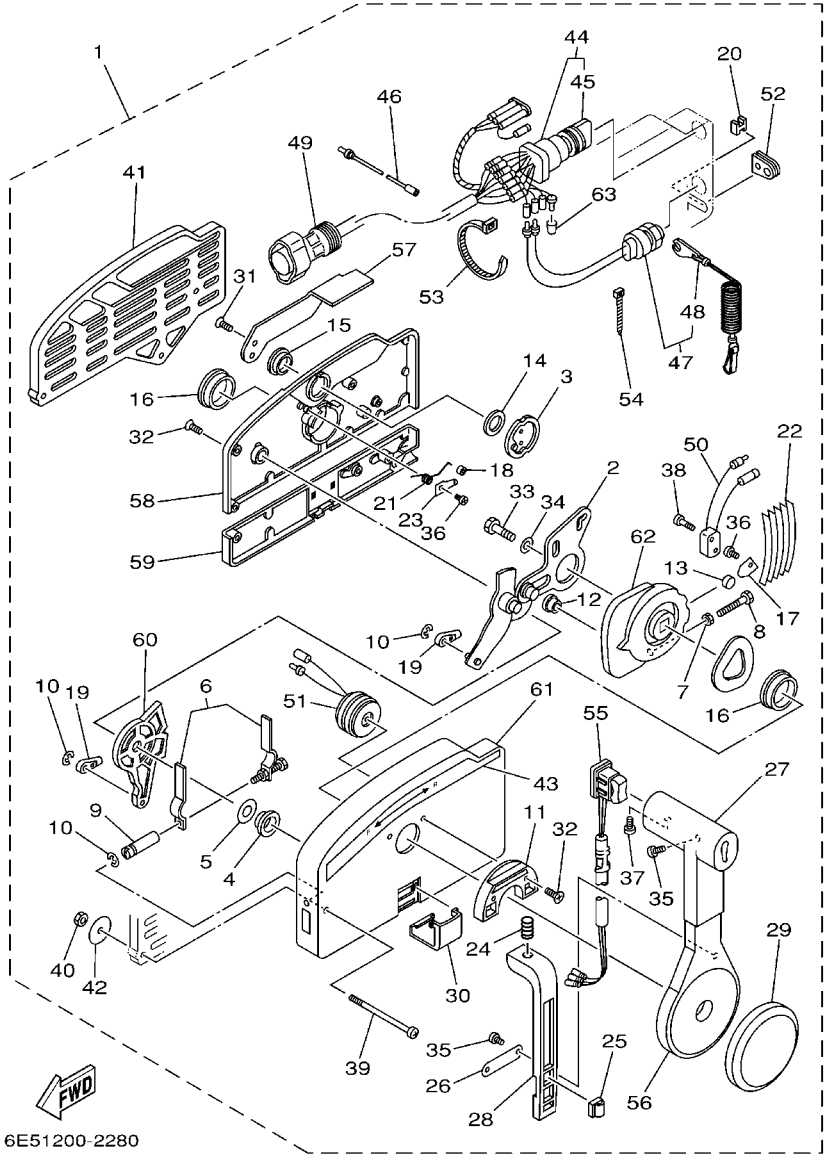

FIG. 36 REMOTE CONTROL ASSY — CONTROL REMOTO COMPL

REF. NO.	PART NO. CODIGO Nº	DESCRIPTION DESCRIPCION	ET	E	WH	MH		REMARKS OBSERVACIONES
1	703–48205–17	REMOTE CONTROL ASSY (10P) REMOTO CONTROL COMPL. (10P)	1					AP WITH PT/T SW. AP WITH PT/T SW.
	703–48201–16	REMOTE CONTROL ASSY (10P) REMOTO CONTROL COMPL. (10P)		1	1	1		AP AP
2	703–48261–01	.ARM, THROTTLE .BRAZO ACELERADOR	1	1	1	1		
3	703–48153–00	.SHAFT, FREE ACCEL. .EJE	1	1	1	1		
4	703–48235–00	.BUSHING .BUJE	1	1	1	1		
5	703–48268–00	.SPACER .ESPACIADOR 3	1	1	1	1		
6	703–48264–00	.THROTTLE, FRICTION .FRICCION ACELERADOR	1	1	1	1		
7	95380–05600	.NUT .TUERCA	1	1	1	1		
8	97380–05025	.BOLT .TORNILLO HEXAGONAL	1	1	1	1		
9	703–48265–00	.SHAFT, FRICTION .EJE FRICCION	1	1	1	1		
10	93430–06024	.CIRCLIP .SEGURO	3	3	3	3		
11	703–48245–00	.PLATE, LOCK .PLACA CERRADURA	1	1	1	1		
12	703–48252–00	.ROLLER, CAM .RODILLO LEVA	1	1	1	1		
13	701–48248–00	.ROLLER, FREE ACCEL. .RODILLO ACELERADOR LIBRE	1	1	1	1		
14	703–48198–00	.WASHER, WAVE .RONDANA ONDULADA 3	1	1	1	1		
15	703–48243–00	.BUSHING .BUJE 3	1	1	1	1		
16	703–48236–00	.BUSHING 1 .BUJE	2	2	2	2		
17	703–48189–00	.RETAINER .RETENEDOR	1	1	1	1		
18	703–48234–00	.ROLLER, DETENT .RODILLO	1	1	1	1		
19	703–48345–01	.CABLE END, REMOTE CONTROL 2 .TERMINAL CABLE DE CONTROL REM	2	2	2	2		
20	703–48358–00	.ANCHOR, CABLE .ABRAZADERA CABLE	1	1	1	1		
21	703–48244–00	.SPRING, FREE ACCEL. .RESORTE ACELERADOR LIBRE	1	1	1	1		
22	703–48238–00	.SPRING, DETENT .RESORTE	5	5	5	5		
23	703–48246–00	.SPACER .ESPACIADOR	1	1	1	1		
24	703–48227–00	.SPRING, NEUTRAL LOCK .RESORTE DE SEGURO	1	1	1	1		
25	703–82594–00	.CLAMP .GRAMPA	1					WITH PT/T SW. WITH PT/T SW.
26	703–48226–00	.PLATE, STOPPER .PLACA RETEN	1	1	1	1		

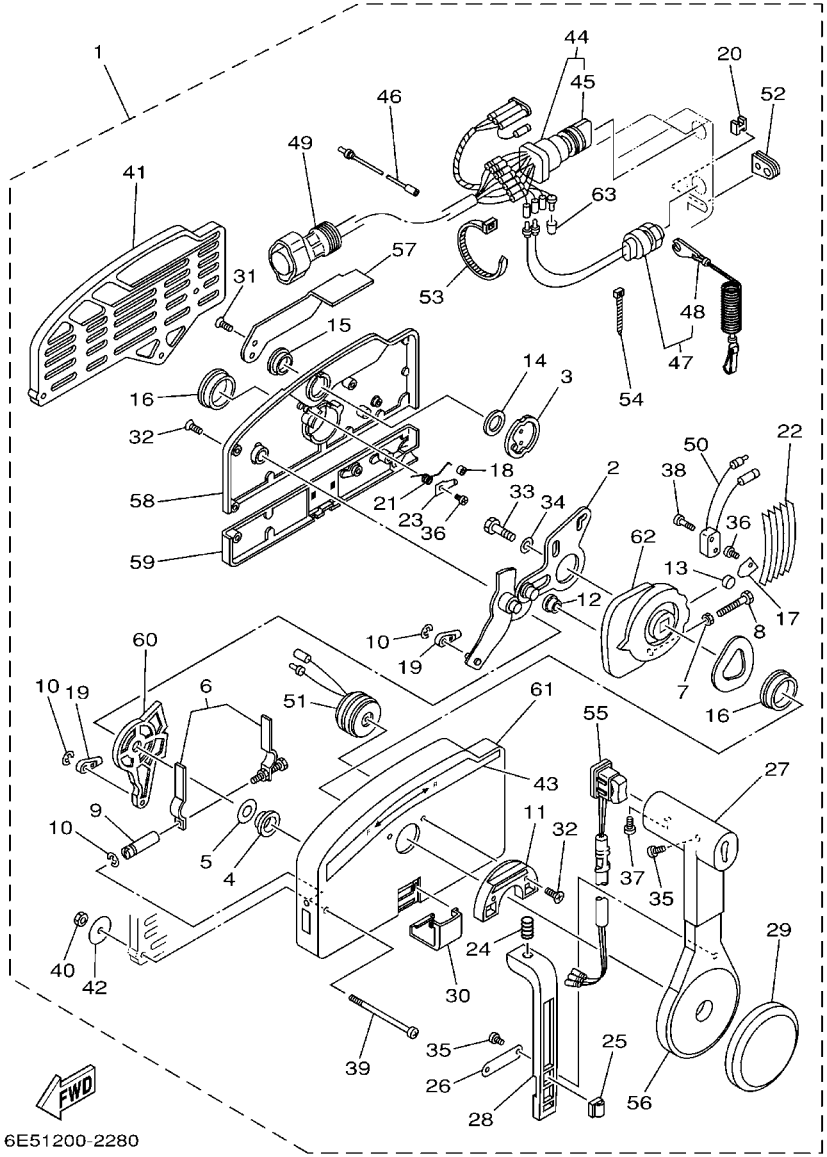

6E51200-2280

FIG. 36 REMOTE CONTROL ASSY — CONTROL REMOTO COMPL

REF. NO.	PART NO. CODIGO Nº	DESCRIPTION DESCRIPCION	ET	E	WH	MH		REMARKS OBSERVACIONES
27	703–48222–00	.GRIP, CONTROL LEVER .MANGO DE PALANCA CONTROL	1	1	1	1		SINGLE SINGLE
28	703–48223–00	.LOCK, NEUTRAL .CERRADURA NEUTRO	1	1	1	1		
29	703–48225–00	.COVER .CUBIERTA	1	1	1	1		
30	703–48219–00	.COVER, LEAD .CUBIERTA	1	1	1	1		
31	703–48281–00	.SCREW .TORNILLO 1	2	2	2	2		
32	703–48282–00	.SCREW .TORNILLO 2	7	7	7	7		
33	97380–08030	.BOLT .TORNILLO HEXAGONAL	1	1	1	1		
34	92990–08600	.WASHER, PLATE .ARANDELA PLANA	1	1	1	1		
35	98580–04010	.SCREW, PAN HEAD .TORNILLO DE CABEZA CRUZADA	3	3	3	3		
36	98580–04006	.SCREW, PAN HEAD .TORNILLO DE CABEZA CRUZADA	2	2	2	2		
37	98580–05010	.SCREW, PAN HEAD .TORNILLO DE CABEZA CRUZADA	1	1	1	1		
38	98580–03015	.SCREW, PAN HEAD .TORNILLO DE CABEZA CRUZADA	2	2	2	2		
39	703–48291–10	.SCREW (M6) .TORNILLO (M6)	3	3	3	3		
40	95380–06600	.NUT, HEXAGON .TUERCA	3	3	3	3		
41	703–48293–10	.SPACER, REMOTE CONTROL .ESPACIADOR	1	1	1	1		SINGLE SINGLE
42	701–48287–00	.WASHER .ARANDELA	3	3	3	3		
43	703–48215–00	.GRAPHIC .CALCOMANIA 1	1	1	1	1		
44	703–82510–43	.MAIN SWITCH ASSY .CONJUNTO DE LLAVE IGNICION	1	1	1	1		
45	703–82577–00	..CAP, KEY ..TAPA	1	1	1	1		
46	703–82531–00	.WIRE, LEAD .CABLE CONDUCTOR	1	1	1	1		
47	688–82575–01	.ENGINE STOP SWITCH ASSY .INTERRUPTOR DE PARADA COMPL	1	1	1	1		
48	682–82556–00	..STOPPER ..RETENER	1	1	1	1		
49	688–8258A–20	.EXTENSION, WIRE HARNESS .EXTENSION, ARNES DE CABLES	1	1	1	1		L:5M (10P) L:5M (10P)
50	703–82540–00	.NEUTRAL SWITCH ASSY .INTERRUPTOR NEUTRAL COMPL	1	1	1	1		
51	703–83383–02	.BUZZER .ZUMBADOR	1	1	1	1		
52	703–48284–00	.GROMMET .TAPON 1	1	1	1	1		
53	703–82591–00	.BAND .BANDA	1	1	1	1		

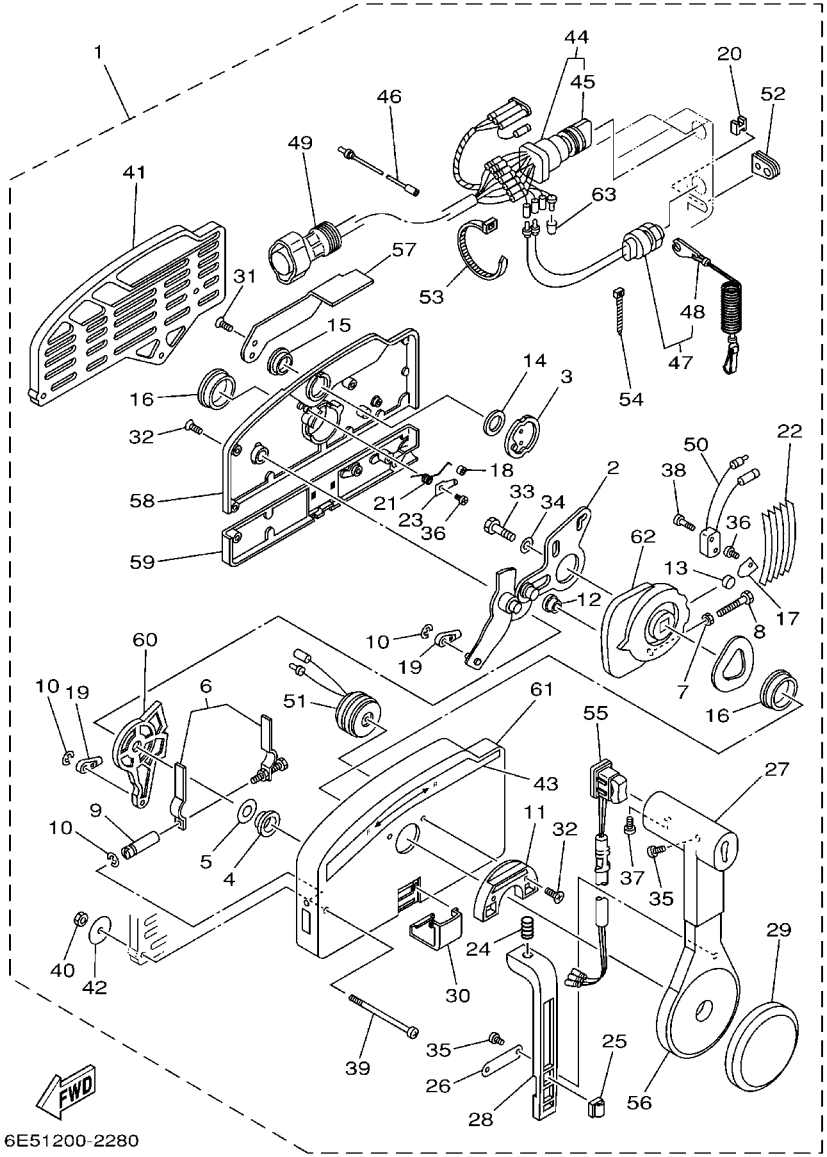

FIG. 36 REMOTE CONTROL ASSY — CONTROL REMOTO COMPL

REF. NO.	PART NO. CODIGO Nº	DESCRIPTION DESCRIPCION	ET	E	WH	MH		REMARKS OBSERVACIONES
54	703–82592–00	.BAND .BANDA	1	1	1	1		
55	703–82563–02	.TRIM & TILT SWITCH ASSY .INTERRUPTOR DE INCLINACION	1					WITH PT/T SW. WITH PT/T SW.
	703–48224–00	.COVER, CONTROL LEVER .CUBIERTA DE PALANCA CONTROL		1	1	1		WITHOUT PT/T SW. WITHOUT PT/T SW.
56	703–48221–00	.LEVER, CONTROL .PALANCA CONTROL	1	1	1	1		
57	703–48152–00	.KNOB, FREE ACCEL. .PERILLA	1	1	1	1		
58	703–48212–00	.BACK PLATE 1 .PLACA TRASERA 1	1	1	1	1		
59	703–48213–00	.BACK PLATE 2 .PLACA TRASERA 2	1	1	1	1		
60	703–48271–00	.ARM, SHIFT .BRAZO CAMBIADOR	1	1	1	1		
61	703–48211–01	.HOUSING,1 .CAJA	1	1	1	1		
62	703–48232–00	.GEAR .ENGRANAJE 1	1	1	1	1		
63	703–82542–00	.CAP .TAPA		2	2	2		FOR 703-48201-16 FOR 703-48201-16

FIG. 37 METER MEDIDOR

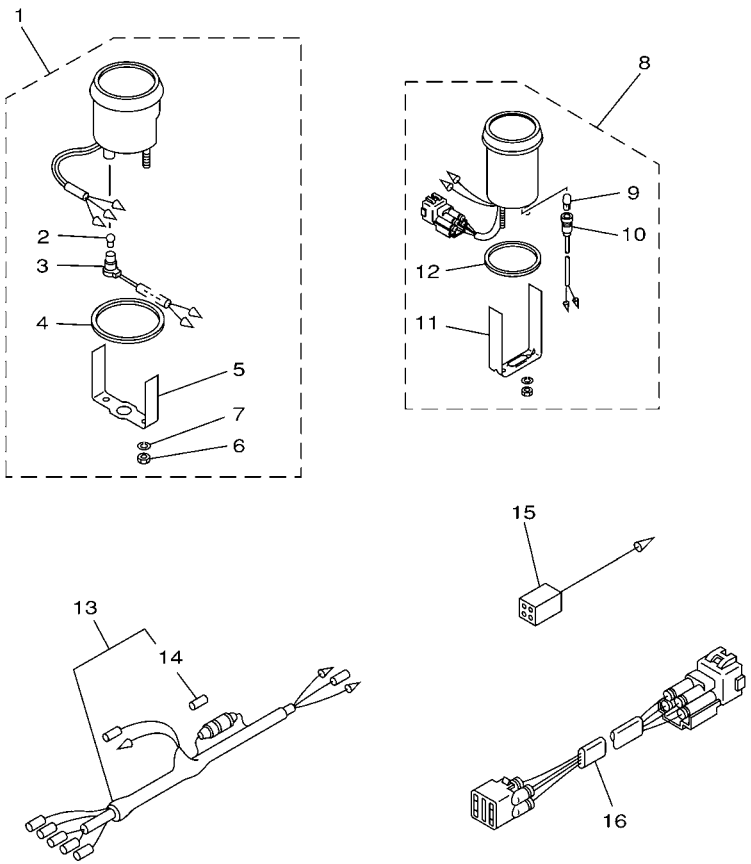

6E50200-0280

REF. NO.	PART NO. CODIGO Nº	DESCRIPTION DESCRIPCION	ET	E	WH	MH		REMARKS OBSERVACIONES
1	6Y5–83540–14	TACHOMETER ASSY TACOMETRO COMPLETO	1					AP EXCEPT TUNA WI AP EXCEPT TUNA WI
2	6Y5–83517–00	.BULB (12V-1.7W, T10) .BOMBILLA (12V-1.7W, T10)	1					
3	6Y5–83536–10	.SOCKET, METER .ENCASTRE DE MEDIDOR	1					
4	6Y5–83523–00	.DAMPER .AMORTIGUADOR	1					
5	6Y5–83514–00	.PLATE, FITTING .PLACA ACCESORIA	1					
6	95380–05600	.NUT .TUERCA	2					
7	92990–05100	.WASHER, SPRING .ARANDELA PLANA	2					
8	6Y5–83670–12	TRIM METER ASSY. MEDIDOR DE INCLINACION	1					AP AP
9	6Y5–83518–00	.BULB (12V-1.7W, T6.5) .BOMBILLA (12V-1.7W, T6.5)	1					
10	6Y5–83536–00	.SOCKET, METER .ENCASTRE DE MEDIDOR	1					
11	6Y5–83544–00	.PLATE, FITTING .PLACA ACCESORIA	1					
12	688–83664–00	.DAMPER .AMORTIGUADOR	1					
13	6Y5–83553–00	WIRE, LEAD CABLE CONDUCTOR	1					AP AP
14	1E6–82151–00	.FUSE (10A) .FUSIBLE (10A)	1					
15	6Y5–82117–00	WIRE, LEAD (BLACK) CABLE, CONDUCTOR (NEGRO)	1					AP EXCEPT TUNA AP EXCEPT TUNA
16	6R3–82553–70	EXTENSION, WIRE LEAD CABLE	1					AP 4P,7M AP 4P,7M

FIG. 38 REPAIR KIT 1 — ESTUCHE REPARATION 1

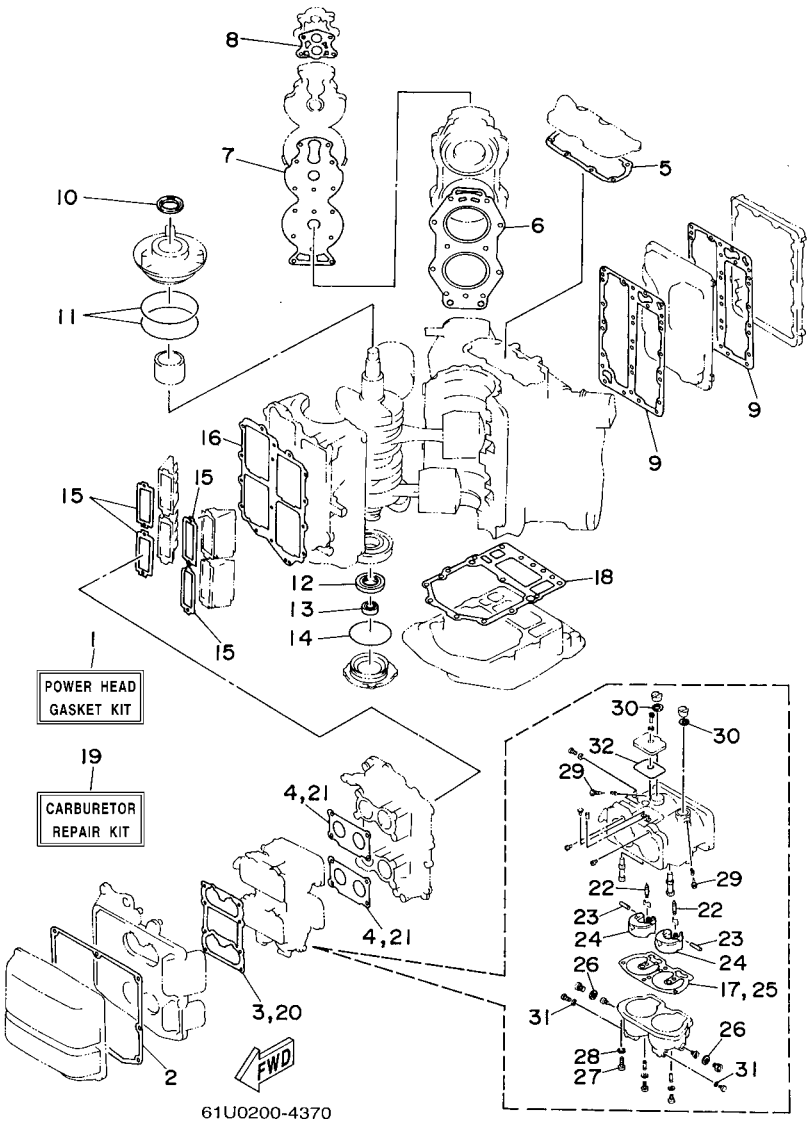

REF. NO.	PART NO. CODIGO Nº	DESCRIPTION DESCRIPCION	ET	E	WH	MH		REMARKS OBSERVACIONES
1	6E5–W0001–A3	POWER HEAD GASKET KIT JUEGO DE EMPAQUE DE MOTOR	1	1	1	1		
2	6E5–14416–A1	.GASKET, AIR CLEANER .EMPAQUE	1	1	1	1		
3	6E5–14483–A1	.GASKET .EMPAQUE	1	1	1	1		
4	6E5–14198–A2	.GASKET .EMPAQUE	2	2	2	2		
5	6E5–11381–A2	.GASKET 1 .EMPAQUE 1	1	1	1	1		
6	6E5–11181–A1	.GASKET, CYLINDER HEAD 1 .JUNTA, DE CULATA 1	2	2	2	2		
7	6E5–11193–A0	.GASKET, HEAD COVER 1 .EMPAQUE	2	2	2	2		
8	688–12414–A1	.GASKET, COVER .EMPAQUE	2	2	2	2		
9	6E5–41112–A1	.GASKET, EXHAUST INNER COVER .EMPAQUE	2	2	2	2		
10	93102–40M14	.OIL SEAL .SELLO ACEITE	1	1	1	1		
11	93211–04001	.O-RING .ANILLO O	2	2	2	2		
12	93102–35M13	.OIL SEAL .SELLO ACEITE	1	1	1	1		
13	93101–22M15	.OIL SEAL .SELLO ACEITE	1	1	1	1		
14	93210–74M35	.O-RING .ANILLO O	1	1	1	1		
15	6E5–13621–A1	.GASKET, VALVE SEAT .JUNTA, DE VALV.DE EMPAQUE	4	4	4	4		
16	6E5–13645–A1	.GASKET, MANIFOLD 1 .EMPAQUE	1	1	1	1		
17	6E5–14384–04	.GASKET, FLOAT CHAMBER .EMPAQUE DE CAMARA DE BOIA	2	2	2	2		
18	6E5–45113–A0	.GASKET, UPPER CASING .EMPAQUE	1	1	1	1		
19	61U–W0093–01	CARBURETOR REPAIR KIT KIT REPARACION CARBURADOR	1	1	1	1		
20	6E5–14483–A1	.GASKET .EMPAQUE	1	1	1	1		
21	6E5–14198–A2	.GASKET .EMPAQUE	2	2	2	2		
22	6E5–14546–00	.VALVE, NEEDLE .VALVULA DE AGUJA	4	4	4	4		
23	6E5–14386–02	.PIN, FLOAT .PASADOR DE BOIA	4	4	4	4		
24	6E5–14385–02	.FLOAT .BOIA	4	4	4	4		
25	6E5–14384–04	.GASKET, FLOAT CHAMBER .EMPAQUE DE CAMARA DE BOIA	2	2	2	2		
26	6E5–14398–01	.GASKET .EMPAQUE	4	4	4	4		
27	97880–05016	.SCREW, PAN HEAD .TORNILLO DE CABEZA CON PLANA	2	2	2	2		

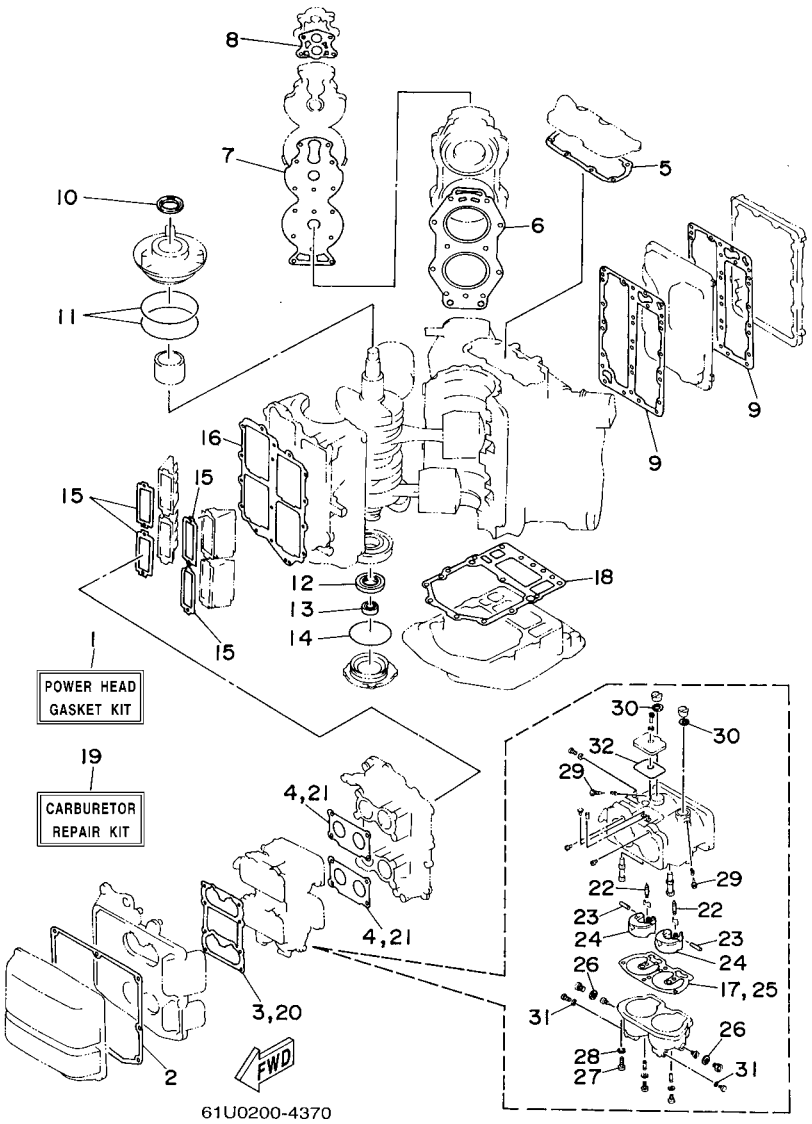

FIG. 38 REPAIR KIT 1 — ESTUCHE REPARATION 1

REF. NO.	PART NO. CODIGO Nº	DESCRIPTION DESCRIPCION	ET	E	WH	MH		REMARKS OBSERVACIONES
28	92990–05100	.WASHER, SPRING .ARANDELA PLANA	2	2	2	2		
29	6E5–14323–03	.SCREW, AIR ADJUSTING .TORNILLO DE AJUSTE DE AIRE	4	4	4	4		
30	6E5–14979–00	.GASKET .EMPAQUE DE ARRANQUE	4	4	4	4		
31	6J8–14959–00	.GASKET .EMPAQUE	4	4	4	4		
32	6E5–14959–01	.GASKET .EMPAQUE	2	2	2	2		

FIG. 39 REPAIR KIT 2 — ESTUCHE REPARATION 2

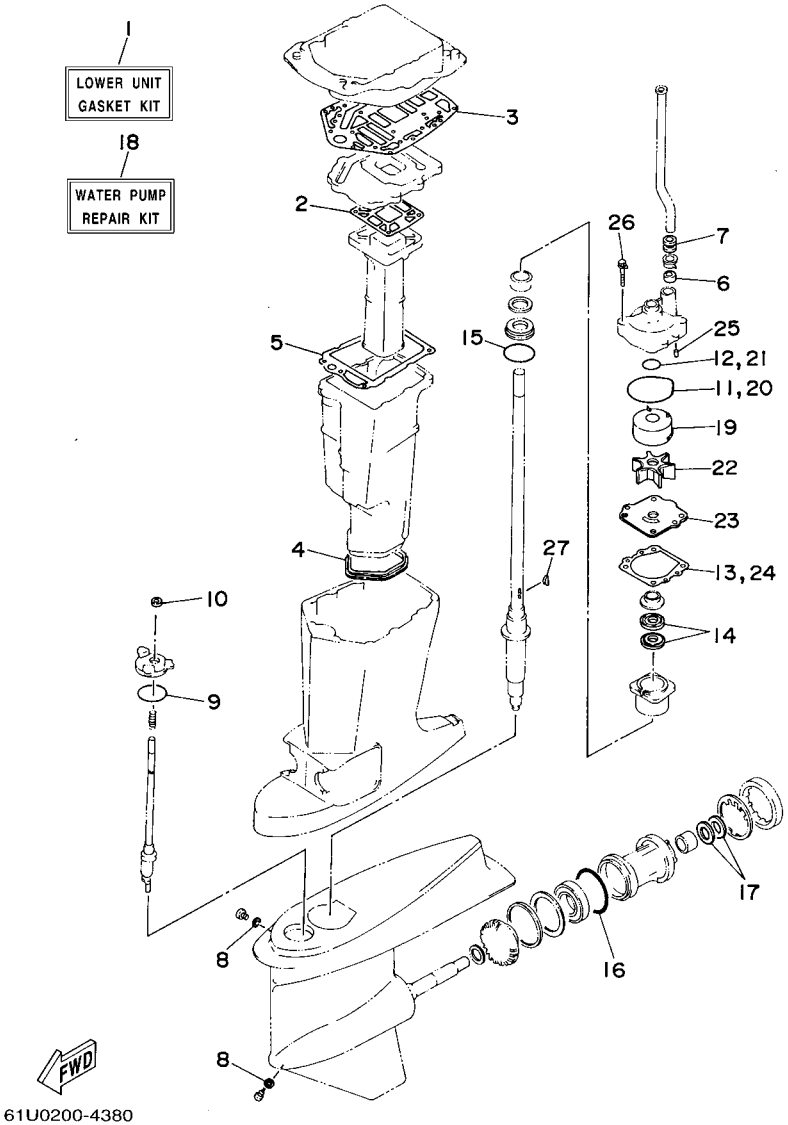

REF. NO.	PART NO. CODIGO Nº	DESCRIPTION DESCRIPCION	ET	E	WH	MH		REMARKS OBSERVACIONES
1	6E5–W0001–C1	LOWER UNIT GASKET KIT JUEGO DE EMPAQUE UNIDAD INFER.	1	1	1	1		
2	6E5–41134–B0	.GASKET, EXHAUST MANIFOLD .EMPAQUE	1	1	1	1		
3	6E5–45114–A0	.GASKET, UPPER CASING .EMPAQUE	1	1	1	1		
4	6E5–45123–00	.GASKET, MUFFLER .EMPAQUE SILENCIADOR	1	1	1	1		
5	6E5–41135–A0	.GASKET, EXHAUST MANIFOLD .EMPAQUE	1	1	1	1		
6	6E5–44365–00	.DAMPER, WATER SEAL .HULE DE SELLO DE AGUA	1	1	1	1		
7	6E5–44366–00	.DAMPER, WATER SEAL .GOMA DEL SELLO DE AGUA	1	1	1	1		
8	90430–08020	.GASKET .JUNTA	2	2	2	2		
9	93210–58144	.O-RING .ANILLO O	1	1	1	1		
10	93106–09014	.OIL SEAL .RETEN DE ACEITE	1	1	1	1		
11	93210–86M38	.O-RING .ANILLO O	1	1	1	1		
12	93210–37160	.O-RING .ANILLO O	1	1	1	1		
13	6E5–44315–A0	.GASKET, WATER PUMP .EMPAQUE	1	1	1	1		
14	93101–28M16	.OIL SEAL .SELLO ACEITE	2	2	2	2		
15	93210–55M14	.O-RING .ANILLO O	1	1	1	1		
16	93210–86M39	.O-RING .ANILLO O	1	1	1	1		
17	93101–30M17	.OIL SEAL .SELLO ACEITE	2	2	2	2		
18	61U–W0078–03	WATER PUMP REPAIR KIT ESTUCHE REPARACION BOMBA AGUA	1	1	1	1		
19	6R3–44322–42	.INSERT, CARTRIDGE .CARTUCHO	1	1	1	1		
20	93210–86M38	.O-RING .ANILLO O	1	1	1	1		
21	93210–37160	.O-RING .ANILLO O	1	1	1	1		
22	6E5–44352–01	.IMPELLER .IMPULSOR	1	1	1	1		
23	6E5–44323–40	.OUTER PLATE, CARTRIDGE .PLACA EXTERIOR DEL CARTUCHO	1	1	1	1		
24	6E5–44315–A0	.GASKET, WATER PUMP .EMPAQUE	1	1	1	1		
25	93606–12019	.PIN, DOWEL .PASADOR DE CLAVIJA	2	2	2	2		
26	90119–08M14	.BOLT, WITH WASHER .TORNILLO CON ARANDELA	4	4	4	4		
27	90280–04M05	.KEY, WOODRUFF .CUNA WOODRUFF	1	1	1	1		

NUMERICAL INDEX
INDICE NUMERICO

PART NO. CODIGO Nº	REF. NO.
6E5–11111–00–1S	5 – 1
61U–11119–01	3 – 18
6E5–11119–01	3 – 18
6E5–11181–A1	5 – 2
	38 – 6
6E5–11191–01–1S	5 – 4
6E5–11193–A0	5 – 5
	38 – 7
6R3–1131M–01	3 – 14
6E5–11325–00	3 – 12
6E5–11370–01	6 – 8
	7 – 8
6E5–11371–00–1S	3 – 24
6G5–11372–00–1S	5 – 22
6E5–11372–01	3 – 5
624–11379–00	3 – 3
6E5–11381–A2	3 – 25
	38 – 5
6G5–11382–A1	5 – 21
6R3–11397–01	3 – 15
6N7–11411–01	4 – 1
6E5–11447–00	4 – 2
663–11518–01	3 – 4
61U–11601–00	4 – 17
61U–11601–10	4 – 17
61U–11601–20	4 – 17
6R5–11631–01–93	4 – 16
6K7–11633–00	4 – 20
6E5–11634–00	4 – 21
6R5–11635–01	4 – 16
6R5–11636–01	4 – 16
6R5–11642–01–93	4 – 18
6R5–11645–01	4 – 18
6R5–11646–01	4 – 18
6E5–11650–01	4 – 22
6E5–12411–30	5 – 7
6G5–12413–00–1S	5 – 8
688–12414–A1	5 – 9
	38 – 8
6G5–12416–00	5 – 18
6E5–12576–00	5 – 24
6G5–12581–00	30 – 10
677–13437–0B	1 – 24
	2 – 23
6E5–13610–00	6 – 1
	7 – 1
6E5–13621–A1	6 – 3
	7 – 3

PART NO. CODIGO Nº	REF. NO.
6E5–13621–A1	38 – 15
6E5–13641–03–1S	6 – 6
	7 – 6
6E5–13645–A1	6 – 21
	7 – 13
	38 – 16
6E5–14159–00	8 – 10
	9 – 10
6E5–14198–A2	6 – 28
	7 – 18
	38 – 4
6E5–14223–00	8 – 23
	9 – 23
61U–14301–03	9 – 1
61U–14301–10	9 – 1
61U–14301–M2	8 – 1
61U–14302–03	9 – 2
61U–14302–10	9 – 2
61U–14302–M2	8 – 2
6E5–14321–00	8 – 18
	9 – 18
6E5–14323–03	8 – 22
	9 – 22
	38 – 29
6E5–14324–00	8 – 32
	9 – 28
6A0–14325–00	10 – 34
6E5–14328–01	8 – 20
	9 – 20
6J8–14334–00	8 – 19
	9 – 19
61U–14381–00	8 – 4
	9 – 4
61U–14381–M0	8 – 5
61A–14383–01	8 – 34
	9 – 29
6E5–14383–01	8 – 6
	9 – 6
64D–14384–01	9 – 3
6E5–14384–04	8 – 3
	9 – 3
	38 – 17
6E5–14385–02	8 – 8
	9 – 8
	38 – 24
6E5–14386–02	8 – 11
	9 – 11
	38 – 23

PART NO. CODIGO Nº	REF. NO.
61U–14394–00	8 – 14
	9 – 14
64D–14394–00	9 – 14
647–14395–60	6 – 36
	7 – 29
6E5–14398–01	8 – 16
	9 – 16
	38 – 26
6E5–14416–A1	6 – 42
	7 – 35
	38 – 2
61U–14417–00–94	6 – 32
6E5–14417–10–94	7 – 25
6E5–14418–00	6 – 40
	7 – 33
6E5–1441K–00	6 – 41
	7 – 34
6E5–14483–A1	6 – 37
	7 – 30
	38 – 3
624–14485–00	6 – 7
	7 – 7
6E5–14485–00	6 – 34
	7 – 27
61U–14488–00	13 – 65
6E5–14488–00	14 – 21
6E5–14527–01	8 – 24
	9 – 24
6E5–14546–00	8 – 9
	9 – 9
	38 – 22
6E5–14711–01–5B	30 – 26
6E5–14711–10–5B	30 – 26
6E5–14737–00	30 – 27
6E5–1492A–00	8 – 17
	9 – 17
61A–1492E–87	8 – 15
	9 – 15
61U–1492F–39	8 – 12
	9 – 12
61A–1492G–54	8 – 31
	9 – 27
61A–1492H–12	8 – 30
	9 – 26
61U–14959–00	8 – 13
	9 – 13
6J8–14959–00	8 – 7
	9 – 31

PART NO. CODIGO Nº	REF. NO.
6J8–14959–00	38 – 31
6E5–14959–01	8 – 25
	9 – 25
	38 – 32
6E5–14979–00	8 – 21
	9 – 21
	38 – 30
6J8–14995–00	9 – 7
61U–15100–00–1S	3 – 2
6E5–15163–00–1S	4 – 3
6G5–15359–00–94	4 – 11
61U–15711–00	13 – 2
663–15713–00	13 – 5
61U–15714–00	13 – 6
663–15715–00	13 – 12
696–15716–00	13 – 13
663–15719–00	13 – 15
61U–15723–01	13 – 48
663–15726–01	13 – 10
696–15734–00	13 – 14
663–15735–01	13 – 52
663–15739–00	13 – 4
663–15741–02	13 – 8
663–15744–00	13 – 11
663–15752–00	13 – 18
663–15753–00	13 – 19
663–15754–00	13 – 9
689–15755–01	13 – 23
61U–15758–00	13 – 20
692–15758–01–94	13 – 33
697–15761–01	1 – 23
697–15762–00	13 – 34
663–15764–00	13 – 7
61U–15770–00	13 – 51
61U–15772–00	13 – 39
696–15773–00	13 – 3
61U–15774–00–94	13 – 47
6F5–15779–02	13 – 25
697–15787–00–94	13 – 29
697–15789–00	13 – 46
663–15794–00	13 – 56
61U–2415A–00	13 – 64
6YJ–24167–00	33 – 7
6YJ–24201–00	33 – 1
6YJ–24201–10	33 – 1
6YJ–24260–00	33 – 3
6Y1–24260–12	33 – 3
6Y1–24268–00	33 – 6

PART NO. CODIGO Nº	REF. NO.
6E5–24304–10	10 – 1
6E5–24305–05	12 – 2
	33 – 9
6Y2–24305–05	12 – 4
	33 – 11
6Y2–24306–0A	33 – 8
6Y2–24306–55	12 – 1
6E5–24312–00	5 – 15
61U–24313–00	10 – 3
61U–24314–00	10 – 22
61U–24315–00	11 – 22
61U–24316–00	11 – 1
6G5–24316–10	10 – 40
61U–24317–00	11 – 30
6G5–24318–10	10 – 44
6G5–24319–10	10 – 45
6Y1–24329–00	33 – 5
6E5–24351–01	33 – 14
6E5–24351–51	12 – 7
61J–24360–11	33 – 16
6Y2–24360–60	12 – 9
6E5–24367–01	20 – 31
6E5–24367–10	20 – 34
6E5–24376–10	10 – 43
650–24378–00	5 – 14
6E0–24378–00	6 – 13
6E5–24378–00	11 – 5
61U–24410–00	11 – 6
6E5–24410–03	10 – 24
61U–24411–00	11 – 7
6E5–24411–00	10 – 29
6E5–24412–10	10 – 36
6E5–24413–00	10 – 26
61U–24421–00	11 – 8
6A0–24421–01	10 – 33
61U–24423–00	11 – 9
6E5–24423–00	10 – 31
61U–24424–00	11 – 17
648–24424–00	10 – 30
650–24431–A0	10 – 37
6E5–24434–02	10 – 32
6E5–24435–00	10 – 28
6E5–24444–00	10 – 25
61U–24454–00	11 – 10
61U–24461–00	11 – 12
61A–24469–00	10 – 12
6E5–24471–00	10 – 27
61U–24478–00	11 – 13

PART NO. CODIGO Nº	REF. NO.
61U–24479–00	11 – 14
61U–24486–00	11 – 11
61U–24489–00	11 – 15
61U–24491–10	11 – 19
61U–24494–00	11 – 42
61U–24496–00	11 – 36
61A–24500–00	11 – 33
61A–24521–00	10 – 7
65L–24531–01	10 – 8
60H–24558–00	10 – 13
61A–24560–04	10 – 6
61A–24563–00	10 – 11
61A–24564–00	10 – 9
61U–24566–01	10 – 17
61A–24577–01	10 – 10
6YJ–24610–01	33 – 2
692–26301–03	21 – 20
6A1–28176–00	20 – 44
61H–2819R–31	10 – 49
6E5–41111–00–1S	5 – 11
6E5–41112–A1	5 – 12
	38 – 9
6N7–41113–00–1S	5 – 13
6E5–41131–01–5B	30 – 18
6E5–41131–10–5B	30 – 18
6E5–41132–00–5B	30 – 22
6E5–41132–20–5B	30 – 22
6E5–41134–B0	30 – 23
	39 – 2
6E5–41135–A0	30 – 30
	39 – 5
6E5–41137–03–94	30 – 8
6E5–41213–00	22 – 32
6E5–41217–01	6 – 30
	7 – 20
662–41237–01	22 – 25
6E5–41256–01	7 – 21
661–41262–02	7 – 22
6E5–41271–02	7 – 23
689–41273–00	7 – 24
688–41611–00	14 – 9
688–41612–00	14 – 10
6E5–41631–01–1S	22 – 10
6E5–41632–02–1S	22 – 6
688–41636–00	22 – 29
6E5–41636–01	22 – 23
692–42111–12–4D	21 – 2
692–42115–00	21 – 11

NUMERICAL INDEX
INDICE NUMERICO

PART NO. CODIGO Nº	REF. NO.
664–42119–00	21 – 3
692–42121–02–4D	21 – 21
663–42126–01	21 – 48
663–42133–01	21 – 15
692–42134–03–94	21 – 16
692–42135–00	21 – 14
6K5–42137–00	21 – 5
663–42138–00	21 – 12
6F6–42177–A0	21 – 4
6E5–42510–05–8D	24 – 2
	27 – 10
6E5–42510–11–8D	24 – 2
6E5–42510–25–8D	24 – 2
	27 – 10
6E5–42510–61–8D	24 – 2
	27 – 10
6E5–42510–71–8D	24 – 2
6E5–42515–00	21 – 56
6E5–42518–01	21 – 52
663–42528–00	21 – 53
6E5–42535–60	24 – 8
	27 – 14
624–42542–00	13 – 31
	14 – 19
	15 – 4
	18 – 5
6E5–42546–60	24 – 9
	27 – 15
61U–42610–K0–4D	2 – 1
61U–42610–L0–4D	1 – 1
61U–42610–U0–4D	2 – 1
6G5–42613–00–4D	1 – 15
6E5–42613–01–4D	2 – 15
6E5–42615–00	1 – 14
	2 – 14
6E5–42617–00	1 – 11
	2 – 11
6E5–42619–00	2 – 12
61U–42619–10	1 – 12
61U–42626–00	1 – 17
6E5–42627–00	2 – 13
61U–42627–10	1 – 13
61U–42636–00	1 – 18
6E5–42647–00–94	1 – 2
	2 – 2
6E5–42649–01–94	1 – 3
	2 – 3
688–42652–00	1 – 8

PART NO. CODIGO Nº	REF. NO.
688–42652–00	2 – 8
6E5–42652–00	1 – 7
	2 – 7
663–42662–00	1 – 4
	2 – 4
61U–42677–J0	1 – 20
	2 – 18
61U–42678–H0	1 – 22
	2 – 20
688–42681–61	2 – 21
688–42682–61	2 – 22
648–42715–00	22 – 49
6E5–42716–00	20 – 37
6E5–42724–00	30 – 9
61U–42725–00	20 – 16
6E5–42725–00	20 – 15
6H4–42726–00	20 – 25
688–42726–10	20 – 25
6E5–42738–01–5B	20 – 17
6E5–42741–01–4D	20 – 27
61U–42744–00	11 – 48
6G1–42748–00	6 – 31
6H4–42748–00	20 – 2
6E5–42761–00–1S	3 – 20
6E5–42762–00–1S	3 – 21
6E5–42769–00	30 – 3
6E5–42771–01–4D	20 – 28
6G5–42791–00	20 – 43
6G5–42791–10	20 – 43
688–42815–01–8D	20 – 3
688–42816–00	20 – 4
6G5–42816–00	20 – 9
6E5–42816–01	20 – 10
6E5–42817–01–4D	20 – 8
64E–43111–02–8D	26 – 1
6E5–43111–05–8D	23 – 1
6E5–43111–63–8D	23 – 1
64E–43112–02–8D	26 – 9
6E5–43112–05–8D	23 – 6
6E5–43112–63–8D	23 – 6
6E5–43124–00	25 – 4
64E–43126–00	26 – 36
6E5–43126–02	23 – 38
6E5–43128–00–8D	25 – 2
6R3–43131–00	23 – 14
64E–43131–01	26 – 15
64E–43139–02	27 – 1
6G5–43144–00	23 – 29

PART NO. CODIGO Nº	REF. NO.
6G5–43144–00	26 – 27
6E5–43145–01	34 – 8
6G5–43145–01	23 – 18
6G5–43148–10	23 – 34
	26 – 32
6E5–43160–00	23 – 19
688–43165–00	23 – 20
6E5–43170–00–4D	25 – 1
61U–43181–00	23 – 31
6G5–43181–02	26 – 29
688–43184–00	25 – 28
61U–43185–00	23 – 32
6G5–43185–02	26 – 30
64E–43311–10–8D	26 – 22
64E–43311–20–8D	26 – 22
6E5–43311–A2–8D	23 – 25
6E5–43311–E2–8D	23 – 25
6E5–43317–00	25 – 24
61A–43376–00	27 – 8
6E5–43613–00	25 – 6
6E5–43614–00	25 – 7
6E5–43615–00	25 – 8
6E5–43616–00	25 – 26
6E5–43630–01	25 – 18
61U–43631–00	25 – 22
6E5–43659–00	25 – 13
6E5–43676–00	25 – 30
6E5–43679–00	25 – 16
64E–43800–02–4D	28 – 1
64E–43802–00	29 – 8
64E–43805–00	29 – 37
64E–4380F–00	29 – 33
64E–4380J–00	29 – 30
64E–43810–00	28 – 6
6E5–43814–02	28 – 13
64E–43816–00	29 – 17
64E–43817–00	28 – 5
64E–43817–10	29 – 19
64E–43818–01	28 – 32
64E–4381G–00	28 – 27
64E–43820–00	28 – 15
64E–43821–00	28 – 16
64E–43822–00	28 – 17
64E–43825–01	28 – 2
64E–43827–00	29 – 22
64E–43828–00	28 – 22
64E–43829–00	28 – 23
64E–4382G–00	28 – 29

PART NO. CODIGO Nº	REF. NO.
64E–43830–00	29 – 4
64E–43831–00	29 – 2
64E–43841–00	29 – 7
64E–43843–00	29 – 6
64E–43843–10	29 – 38
64E–4384J–00	28 – 18
64E–43850–00	29 – 15
64E–43851–00	29 – 11
64E–43855–00	29 – 14
64E–43858–00	29 – 12
6E5–43858–00	28 – 28
72X–43858–00	29 – 5
64E–43859–00	29 – 13
64E–43860–00	29 – 20
6E5–43862–00	28 – 10
6G5–43863–00	29 – 10
6E5–43864–00	28 – 20
6G5–43864–00	28 – 19
64E–43865–00	29 – 16
6G5–43865–00	29 – 35
64E–43866–00	28 – 9
64E–43867–00	28 – 8
64E–43868–00	29 – 3
64E–43869–00	28 – 26
6H1–4386K–10	29 – 29
6E5–43872–00	28 – 12
64E–43873–00	29 – 24
6E5–43874–01	28 – 21
64E–43875–00	29 – 25
64E–43879–00	29 – 27
64E–43879–10	29 – 26
64E–4387A–00	29 – 23
64E–43880–01	29 – 28
64E–43883–00	28 – 11
64E–4388E–00	28 – 25
64E–4388E–10	29 – 1
64E–4388J–00	28 – 3
64E–43891–00	29 – 31
64E–43892–00	29 – 34
6E5–43896–00	29 – 9
64E–43897–00	28 – 24
64E–43898–00	28 – 7
697–44113–00	21 – 29
6E5–44117–00–1S	22 – 36
6E5–44118–01–94	22 – 44
61U–44120–01	22 – 51
6E5–44120–03	22 – 51
61U–44120–11	22 – 51

PART NO. CODIGO Nº	REF. NO.
61U–44120–21	22 – 51
6E5–44120–23	22 – 51
68F–44121–00	22 – 38
6E5–44122–00	22 – 39
6E5–44124–00	21 – 44
6E5–44150–02	31 – 17
692–44159–01	21 – 33
663–44173–00	21 – 34
6K5–44191–00	21 – 30
688–44194–00	22 – 14
61A–44311–01	31 – 24
6E5–44312–00	32 – 20
6E5–44315–A0	31 – 31
	39 – 13
6R3–44322–42	31 – 25
	39 – 19
6E5–44323–40	31 – 30
	39 – 23
6E5–44352–01	31 – 28
	39 – 22
6E5–44361–00	32 – 2
6E5–44361–10	32 – 2
6E5–44361–20	32 – 2
6E5–44365–00	32 – 3
	39 – 6
6E5–44366–00	32 – 1
	39 – 7
6E5–44391–00	20 – 14
6E5–44511–00–5B	24 – 33
	27 – 39
6E5–44511–60–5B	24 – 33
	27 – 39
6E5–44514–00–94	24 – 26
	27 – 32
6E5–44514–60–94	24 – 26
	27 – 32
6G5–44526–00	23 – 3
	26 – 3
68F–44533–00	3 – 22
6G5–44551–01–8D	24 – 7
	27 – 13
6E5–44551–61–8D	24 – 7
	27 – 13
6E5–44552–01–94	24 – 19
	27 – 25
6E5–44553–01–8D	24 – 22
	27 – 28
6E5–44555–00–94	24 – 11

PART NO. CODIGO Nº	REF. NO.
6E5–44555–00–94	27 – 17
663–44575–00	24 – 32
	27 – 38
6E5–44575–00	24 – 10
	27 – 16
6E5–45111–02–8D	30 – 1
6E5–45111–23–8D	30 – 1
6E5–45113–A0	30 – 12
	38 – 18
6E5–45114–A0	30 – 19
	39 – 3
663–45119–00	23 – 13
	26 – 14
6E5–45123–00	30 – 29
	39 – 4
6E5–45155–00	30 – 2
6E5–45211–00–4D	30 – 35
688–45214–02	32 – 10
688–45215–02	32 – 11
6G5–45251–02	23 – 2
	26 – 2
61U–45300–13–8D	31 – 1
61U–45300–23–8D	31 – 1
61U–45300–33–8D	31 – 1
6E5–45301–05–8D	31 – 2
6E5–45318–00	30 – 33
6E5–45321–00	31 – 13
6E5–45331–00–94	31 – 34
6E5–45332–00–94	31 – 58
688–45341–10	31 – 7
6E5–45344–00	31 – 40
6E5–45371–01	32 – 14
688–45375–00	32 – 9
663–45376–00–94	32 – 8
6E5–45378–00	31 – 10
688–45383–02	31 – 68
688–45384–00	31 – 69
6E5–45501–01	31 – 43
6E5–45501–11	31 – 43
6E5–45501–21	31 – 43
61A–45527–00	31 – 23
6E5–45536–00	31 – 9
61A–45538–00	31 – 20
6E5–45551–02	31 – 44
6E5–45560–01	31 – 46
6E5–45567–01–10	31 – 5
6E5–45567–01–12	31 – 5
6E5–45567–01–15	31 – 5

NUMERICAL INDEX
INDICE NUMERICO

PART NO. CODIGO Nº	REF. NO.
6E5–45567–01–18	31 – 5
6E5–45567–01–30	31 – 5
6E5–45567–01–40	31 – 5
6E5–45567–01–50	31 – 5
6E5–45571–01	31 – 60
6E5–45576–00	31 – 61
6L6–45577–00–10	31 – 65
6L6–45577–00–12	31 – 65
6L6–45577–00–15	31 – 65
6L6–45577–00–18	31 – 65
6L6–45577–00–30	31 – 65
6L6–45577–00–40	31 – 65
6L6–45577–00–50	31 – 65
6E5–45587–01–10	31 – 37
6E5–45587–01–12	31 – 37
6E5–45587–01–15	31 – 37
6E5–45587–01–18	31 – 37
6E5–45587–01–30	31 – 37
6E5–45587–01–40	31 – 37
6E5–45587–01–50	31 – 37
6E5–45611–01	31 – 48
6E5–45631–01	31 – 56
6E5–45633–01	31 – 57
6E5–45634–01	31 – 50
6E5–45641–03	31 – 49
688–45930–02–98	32 – 26
688–45941–00–EL	32 – 26
6E5–45943–00–EL	32 – 26
6E5–45945–01–EL	32 – 26
6E5–45947–00–EL	32 – 26
688–45970–03–98	32 – 26
688–45978–60–98	32 – 26
6E5–45987–01	32 – 21
688–45997–01	32 – 22
703–48152–00	36 – 57
703–48153–00	36 – 3
703–48189–00	36 – 17
703–48198–00	36 – 14
703–48201–16	35 – 1
	36 – 1
703–48205–17	35 – 1
	36 – 1
703–48211–01	36 – 61
703–48212–00	36 – 58
703–48213–00	36 – 59
703–48215–00	36 – 43
703–48219–00	36 – 30
703–48221–00	36 – 56

PART NO. CODIGO Nº	REF. NO.
703–48222–00	36 – 27
703–48223–00	36 – 28
703–48224–00	36 – 55
703–48225–00	36 – 29
703–48226–00	36 – 26
703–48227–00	36 – 24
703–48232–00	36 – 62
703–48234–00	36 – 18
703–48235–00	36 – 4
703–48236–00	36 – 16
703–48238–00	36 – 22
703–48243–00	36 – 15
703–48244–00	36 – 21
703–48245–00	36 – 11
703–48246–00	36 – 23
701–48248–00	36 – 13
703–48252–00	36 – 12
703–48261–01	36 – 2
703–48264–00	36 – 6
703–48265–00	36 – 9
703–48268–00	36 – 5
703–48271–00	36 – 60
703–48281–00	36 – 31
703–48282–00	36 – 32
703–48284–00	36 – 52
701–48287–00	36 – 42
703–48291–10	36 – 39
703–48293–10	36 – 41
6E5–48310–01	21 – 42
701–48320–30	35 – 2
701–48320–40	35 – 2
701–48320–50	35 – 2
701–48320–80	35 – 2
6E5–48344–00	22 – 7
703–48345–01	36 – 19
701–48350–30	35 – 2
703–48358–00	36 – 20
6E5–48531–00	22 – 1
6E5–48538–00	22 – 2
6E5–61350–02	34 – 1
6E5–61351–01	34 – 2
6E5–61355–00	34 – 5
6E5–81332–00	14 – 13
6E5–81337–01	14 – 16
6N7–81800–10	19 – 1
6N7–81801–00	19 – 8
6N7–81807–00	19 – 11
61A–81809–00	19 – 3

PART NO. CODIGO Nº	REF. NO.
6N7–81810–00	19 – 5
6N7–81813–00	19 – 9
6N7–81820–10	19 – 10
6E5–81822–02–98	19 – 19
61A–81824–00	19 – 4
6K7–81826–10	19 – 14
6E5–8182A–10	19 – 17
6E5–8182E–10	19 – 15
6E5–8182F–10	19 – 16
6K7–8182G–10	19 – 6
6E5–8182K–10	19 – 18
6N7–81830–00	19 – 13
6N7–81840–00	19 – 7
6N7–81850–10	19 – 2
6N7–81857–00	19 – 12
61A–81941–00	16 – 6
6E5–81948–10	16 – 8
6E5–81948–22	16 – 8
6E5–81950–00	16 – 34
689–81952–10	16 – 7
6E5–8195A–00	16 – 35
6H0–81960–00	15 – 13
6E5–81961–00	15 – 14
61U–82105–01	16 – 20
6E5–82116–00	16 – 38
6Y5–82117–00	37 – 15
6E5–82117–01	16 – 21
6G5–82119–00	16 – 37
703–82119–00	20 – 41
	27 – 42
6E5–82147–00	23 – 28
	26 – 26
6E5–82147–20	23 – 28
	26 – 26
6E5–82148–00	23 – 7
	26 – 6
6E5–82149–00	24 – 14
	27 – 20
1E6–82151–00	37 – 14
663–82151–00	16 – 19
6G5–82152–00	16 – 1
6A0–82317–00	13 – 32
	14 – 18
	15 – 3
	18 – 4
6G5–82317–00	14 – 17
663–82370–01	16 – 5
6E3–82370–21	16 – 5

PART NO. CODIGO Nº	REF. NO.
6G1–82370–21	16 – 5
63D–82510–20	17 – 4
703–82510–43	36 – 44
662–82519–00	16 – 28
6R3–82519–00	16 – 22
697–8252E–02–4D	17 – 7
697–8252F–02–4D	17 – 8
703–82531–00	36 – 46
6E5–82531–10	16 – 25
703–82540–00	36 – 50
688–82540–11	17 – 1
703–82542–00	36 – 63
6R3–82553–70	37 – 16
6E5–82554–00	17 – 2
663–82555–01	17 – 3
682–82556–00	17 – 16
	21 – 62
	36 – 48
688–82560–10	16 – 17
703–82563–02	36 – 55
697–82575–00	21 – 61
688–82575–01	36 – 47
688–82575–10	17 – 15
676–82577–00	17 – 5
703–82577–00	36 – 45
6E3–8257H–00	20 – 45
689–8257Y–00	21 – 63
6E5–82588–00	20 – 38
688–8258A–20	36 – 49
6E5–82590–04	16 – 18
6E5–82590–20	16 – 18
61U–82590–M1	16 – 18
703–82591–00	36 – 53
703–82592–00	36 – 54
688–82594–00	20 – 41
6E5–82594–00	20 – 42
703–82594–00	36 – 25
703–83383–02	36 – 51
6Y5–83504–20	18 – 7
6Y5–83514–00	37 – 5
6Y5–83517–00	37 – 2
6Y5–83518–00	37 – 9
61U–83519–00	18 – 1
6Y5–83523–00	37 – 4
6Y5–83536–00	37 – 10
6Y5–83536–10	37 – 3
6Y5–83540–14	37 – 1
6Y5–83544–00	37 – 11

PART NO. CODIGO Nº	REF. NO.
6Y5–83553–00	37 – 13
6N7–83557–00	16 – 39
6E5–83558–00	31 – 12
	32 – 17
6E5–83558–10	31 – 12
6A1–83625–41	14 – 22
6E0–83627–41	21 – 64
688–83664–00	37 – 12
6Y5–83670–12	37 – 8
64E–83672–02	27 – 3
72X–85075–L0	29 – 21
6E5–85510–01	14 – 2
6N7–85537–00	15 – 1
6E5–85540–00	15 – 8
6N7–85542–01–1S	15 – 2
689–85547–00	20 – 42
6E5–85550–00	14 – 1
6R3–85570–01	16 – 2
6E5–85580–00	14 – 3
6E5–86110–02	16 – 11
6E5–86116–01	16 – 12
6G5–87149–10	16 – 36
6E5–W0001–A3	38 – 1
6E5–W0001–C1	39 – 1
6E5–W0004–00	6 – 2
	7 – 2
61U–W0070–H0	1 – 21
	2 – 19
61U–W0078–03	39 – 18
6E5–W0084–14–4D	21 – 1
61U–W0090–04–1S	3 – 1
61U–W0093–01	38 – 19
61U–W1571–00	13 – 1
656–W2810–02	10 – 50
61U–W4271–02–4D	20 – 1
6E5–W4271–05–4D	20 – 1
90101–06M27	21 – 49
90101–10M02	30 – 38
90101–12M03	23 – 41
	26 – 39
90101–12M06	21 – 22
90105–10M00	32 – 15
90105–10M20	3 – 9
90109–06M07	25 – 3
90109–08022	4 – 23
90109–12M37	24 – 30
	27 – 36
90109–12M55	23 – 19

PART NO. CODIGO Nº	REF. NO.
90109–14M34	24 – 15
	27 – 21
90109–14M53	24 – 30
	27 – 36
90109–14M54	24 – 15
	27 – 21
90116–06M30	6 – 20
	7 – 12
90116–08M45	3 – 11
90116–10M28	24 – 3
90116–10M38	30 – 37
90119–06M09	20 – 7
90119–06M10	31 – 16
90119–06M31	6 – 43
	7 – 36
90119–06M59	15 – 5
90119–06M65	14 – 20
	18 – 6
90119–06M95	13 – 30
90119–06MA2	3 – 23
	4 – 7
	5 – 23
	22 – 37
90119–06MA3	6 – 22
	7 – 14
90119–06MA4	5 – 6
90119–06MA5	5 – 17
90119–06MA6	5 – 10
90119–08027	30 – 7
90119–08M14	31 – 33
	39 – 26
90119–08M22	20 – 24
90119–08M26	13 – 26
90119–08M57	19 – 22
90119–08M76	19 – 20
90119–08M77	19 – 21
90119–08M79	30 – 13
90119–08M94	3 – 10
90119–08MA3	3 – 19
90119–08MA8	5 – 3
90119–10M89	32 – 7
90149–05095	13 – 55
90149–05M13	21 – 7
90152–05M00	25 – 25
90152–05M07	32 – 12
90157–06013	22 – 11
90157–06M01	20 – 32
90159–06M11	15 – 12

NUMERICAL INDEX
INDICE NUMERICO

PART NO. CODIGO Nº	REF. NO.
90169–05M00	18 – 8
90170–16M01	31 – 45
90170–20137	14 – 6
90171–18M04	32 – 24
90175–06003	21 – 51
90179–06066	24 – 25
	27 – 31
90179–06M24	1 – 16
90179–06M28	6 – 29
	7 – 19
90183–05M02	30 – 28
90185–05002	32 – 13
90185–06M07	22 – 9
90185–08057	21 – 58
90185–09M01	34 – 6
90185–10051	21 – 39
	24 – 4
90185–12058	21 – 28
90185–12M12	24 – 31
	27 – 37
90185–14M00	24 – 17
	27 – 23
90185–22M11	23 – 17
	26 – 20
90201–05M06	11 – 40
90201–06068	10 – 16
90201–06M05	15 – 18
90201–08M13	22 – 21
90201–08M14	28 – 30
90201–08M23	22 – 16
90201–08M54	20 – 22
90201–10120	21 – 38
90201–10M20	34 – 7
90201–12537	21 – 26
90201–12M05	23 – 43
	26 – 41
90201–12M34	21 – 41
90201–13M01	23 – 42
	26 – 40
90201–14M56	24 – 29
	27 – 35
90201–15M00	24 – 29
	27 – 35
90201–15M58	24 – 16
	27 – 22
90201–16M55	24 – 13
	27 – 19
90201–21M18	14 – 5

PART NO. CODIGO Nº	REF. NO.
90201–21M75	4 – 25
90201–22M01	31 – 21
90201–26M57	24 – 27
	27 – 33
90201–26M59	23 – 16
	26 – 19
90201–30M92	31 – 66
90201–38M60	24 – 5
	27 – 11
90202–06009	13 – 61
90202–08M08	25 – 20
90202–08M20	22 – 40
90202–12092	21 – 25
	22 – 20
90202–16061	22 – 54
90202–26M18	24 – 28
	27 – 34
90202–32M19	24 – 12
	27 – 18
90202–40M47	27 – 7
90206–10M04	22 – 34
90206–12054	21 – 27
90206–13M10	20 – 6
90206–22M19	31 – 22
90240–06M07	25 – 9
90250–08M07	31 – 55
90254–03003	21 – 13
	25 – 23
90266–06009	1 – 5
	2 – 5
90266–06M02	1 – 6
	2 – 6
90269–02M09	21 – 6
90280–04M05	31 – 29
	39 – 27
90280–05015	14 – 4
90282–04010	31 – 67
90338–05M03	20 – 31
90340–08002	31 – 6
90340–14M00	3 – 6
90385–12M04	13 – 28
90386–05M54	11 – 38
90386–06M12	22 – 43
90386–08032	21 – 10
	25 – 19
90386–10009	21 – 37
90386–10M16	23 – 33
	26 – 31

PART NO. CODIGO Nº	REF. NO.
90386–12089	21 – 24
	22 – 17
90386–13M38	20 – 5
90386–16M66	22 – 53
90386–18M44	23 – 39
	25 – 5
90386–22M13	22 – 19
90386–22M98	26 – 37
	28 – 33
90386–25M31	23 – 15
	26 – 18
90386–38M32	24 – 6
	27 – 12
90386–38M89	24 – 6
	27 – 12
90387–06M29	22 – 33
90387–06M35	1 – 19
90387–06M77	15 – 15
90387–08M05	13 – 27
90387–08M16	22 – 18
90387–08M37	20 – 21
90387–10M05	23 – 35
	26 – 33
90387–10M61	34 – 3
90387–12M30	21 – 40
90430–08020	31 – 8
	39 – 8
90430–14115	3 – 7
90445–07M23	6 – 12
	7 – 28
90445–07M24	6 – 10
	7 – 10
90445–07M25	6 – 11
90445–07M27	6 – 17
90445–07M28	6 – 9
	7 – 9
90445–07M32	11 – 28
90445–07M46	6 – 15
	7 – 11
90445–07M59	6 – 16
90445–07MA3	11 – 27
90445–07ME8	31 – 11
90445–07ME9	31 – 11
90445–07MF0	32 – 16
90445–13M00	12 – 8
	33 – 15
90445–13M01	12 – 6
	33 – 13

PART NO. CODIGO Nº	REF. NO.
90445–13M02	11 – 34
90445–13M11	11 – 3
90446–15M07	10 – 48
90464–12M00	14 – 12
90465–05M87	16 – 32
90465–06M86	3 – 27
	6 – 25
	7 – 15
	15 – 19
90465–06M90	21 – 59
90465–08M46	11 – 24
90465–08M63	26 – 23
90465–08M89	16 – 33
90465–11M10	10 – 4
	11 – 2
	26 – 21
	27 – 5
	32 – 18
90465–12M25	16 – 31
90465–13M18	5 – 25
	16 – 40
	27 – 43
90467–08004	5 – 16
90468–05M03	11 – 41
90468–07M02	6 – 14
	11 – 29
90468–18008	13 – 63
	22 – 41
90480–10M36	20 – 26
90480–20M05	5 – 20
90480–22M15	20 – 20
90501–07M81	11 – 39
90501–11M10	31 – 19
90501–12082	22 – 48
90501–16M11	5 – 19
90501–16M12	22 – 12
90501–16M17	21 – 35
90501–16M28	24 – 23
	27 – 29
90501–16M37	31 – 51
90501–23215	21 – 9
90502–20M03	23 – 22
90506–08M23	13 – 53
90506–09M09	25 – 27
90506–20011	23 – 37
	26 – 35
90506–23M10	25 – 12
90508–12015	13 – 54

PART NO. CODIGO Nº	REF. NO.
90508–29M12	22 – 22
90560–12M01	34 – 4
91490–16012	13 – 60
91490–25012	21 – 47
	25 – 11
91490–30025	25 – 29
91490–40030	32 – 25
91609–30010	16 – 13
91690–30012	22 – 3
91690–30014	23 – 21
91690–30020	23 – 36
	26 – 34
92900–05100	8 – 27
92903–06100	17 – 12
	21 – 32
92903–06600	3 – 17
	6 – 24
	7 – 32
	14 – 8
	15 – 17
	18 – 3
92903–08100	13 – 50
92903–08600	22 – 46
92903–10600	21 – 8
92905–06100	13 – 16
92990–05100	37 – 7
	38 – 28
92990–05600	6 – 5
	7 – 5
92990–06100	11 – 18
	15 – 10
	17 – 10
92990–06200	13 – 59
	22 – 8
92990–06600	15 – 11
	20 – 33
	21 – 46
	23 – 9
	25 – 10
	26 – 12
92990–08600	19 – 23
	36 – 34
92990–10100	30 – 40
92990–10600	30 – 39
92990–12200	21 – 23
92990–18200	32 – 23
92995–05600	11 – 44
92995–06100	10 – 15

PART NO. CODIGO Nº	REF. NO.
92995–06100	11 – 46
	13 – 36
	17 – 18
	23 – 5
	26 – 5
92995–06200	16 – 31
92995–06600	1 – 10
	2 – 10
	6 – 27
	7 – 17
	10 – 19
	11 – 21
	13 – 37
	14 – 15
	15 – 7
	16 – 4
	20 – 19
	26 – 8
	30 – 5
92995–08100	22 – 5
	26 – 17
	30 – 15
92995–08600	19 – 25
	21 – 57
	25 – 14
	30 – 21
	31 – 42
92995–10100	23 – 11
	24 – 21
	27 – 27
	32 – 6
92995–12200	23 – 23
92995–14200	24 – 28
	27 – 34
92995–14600	24 – 18
	27 – 24
92995–16600	23 – 22
93101–22M15	4 – 13
	38 – 13
93101–28M16	31 – 35
	39 – 14
93101–30M17	31 – 63
	39 – 17
93102–08M43	29 – 36
93102–35M13	4 – 12
	38 – 12
93102–40M14	4 – 5
	38 – 10

NUMERICAL INDEX
INDICE NUMERICO

PART NO. CODIGO Nº	REF. NO.
93106–09014	31 – 15
	39 – 10
93109–38M02	24 – 1
93210–03261	16 – 16
93210–08287	12 – 3
	33 – 10
93210–09165	22 – 52
93210–10M74	28 – 4
93210–16275	34 – 9
93210–37160	31 – 27
	39 – 12
93210–37MH7	27 – 6
93210–55M14	31 – 39
	39 – 15
93210–58144	31 – 14
	39 – 9
93210–74M35	4 – 14
	38 – 14
93210–86M38	31 – 26
	39 – 11
93210–86M39	31 – 64
	39 – 16
93211–04001	4 – 6
	38 – 11
93306–208U0	4 – 9
	31 – 59
93310–836U0	4 – 26
93310–954U1	4 – 8
93311–940U3	4 – 4
93315–425U7	31 – 47
93315–43061	31 – 62
93315–628U9	31 – 3
93317–330U2	31 – 36
93332–000U7	31 – 4
93341–930V2	31 – 38
93410–16006	22 – 55
93410–18M02	23 – 40
93410–22M11	26 – 38
93410–37M04	24 – 8
	27 – 14
93410–40M03	4 – 10
93420–36M01	30 – 34
93430–06024	36 – 10
93501–04M02	22 – 47
93503–16003	31 – 54
93507–32009	31 – 52
93511–32017	31 – 53
93515–32M01	21 – 36

PART NO. CODIGO Nº	REF. NO.
93603–21111	4 – 24
93606–12019	31 – 32
	39 – 25
93608–12063	3 – 8
93608–12M05	30 – 6
	32 – 4
93700–06M03	21 – 17
	22 – 50
	23 – 12
	26 – 13
94702–00160	5 – 26
94702–00247	5 – 26
95303–06600	22 – 13
95380–03600	10 – 35
95380–05600	11 – 37
	21 – 43
	22 – 24
	36 – 7
	37 – 6
95380–06600	13 – 38
	36 – 40
95380–08700	30 – 16
95380–10600	30 – 41
95380–12600	23 – 44
	26 – 42
95380–14800	24 – 17
	27 – 23
95780–05300	21 – 45
95780–10300	27 – 9
95780–12300	23 – 24
97013–06016	3 – 16
	21 – 31
97013–06020	6 – 38
	7 – 31
	17 – 13
	18 – 2
97013–06030	17 – 11
97013–06045	6 – 23
	15 – 16
97013–06060	14 – 7
97013–08016	13 – 49
97013–08030	22 – 45
97013–08045	22 – 15
97075–08035	20 – 23
97075–10045	32 – 5
97080–06035	21 – 54
97080–08016	28 – 31
97095–05010	11 – 43

PART NO. CODIGO Nº	REF. NO.
97095–06010	13 – 57
	23 – 30
	26 – 7
	30 – 4
97095–06012	6 – 26
	7 – 16
	11 – 25
	15 – 6
	16 – 23
97095–06014	10 – 18
97095–06016	1 – 9
	2 – 9
	10 – 14
	11 – 49
	16 – 9
	17 – 17
	20 – 18
	25 – 17
97095–06020	11 – 20
	13 – 35
	16 – 3
	20 – 29
97095–06025	22 – 35
97095–06028	10 – 2
97095–06030	23 – 4
	26 – 4
97095–06050	10 – 38
97095–08016	19 – 24
97095–08020	22 – 4
	26 – 16
97095–08025	31 – 41
97095–08030	30 – 20
97095–08045	30 – 14
97095–10045	23 – 10
	24 – 20
	27 – 26
97305–06012	13 – 21
97305–06016	13 – 17
97305–06025	13 – 22
97380–05025	36 – 8
97380–08030	36 – 33
97607–04310	29 – 32
97780–60525	27 – 2
97880–05008	8 – 26
97880–05016	8 – 28
	38 – 27
97880–05025	6 – 4
	7 – 4

PART NO. CODIGO Nº	REF. NO.
97880–06012	23 – 8
	26 – 11
97880–06016	11 – 16
97880–06018	14 – 11
97880–06025	17 – 9
97880–06040	15 – 9
97885–05012	21 – 19
97885–06008	21 – 18
97885–06010	14 – 14
97885–06012	17 – 6
	21 – 60
97885–06016	24 – 24
	27 – 4
97980–05108	9 – 30
97980–05116	9 – 5
98580–03015	36 – 38
98580–04006	36 – 36
98580–04010	36 – 35
98580–05010	36 – 37
98586–05016	33 – 4
98780–04015	3 – 13
99001–08600	31 – 18

PART NO. CODIGO Nº	REF. NO.

PART NO. CODIGO Nº	REF. NO.

E115A/E115A-TUNA
PARTS CATALOGUE
©2003 by Yamaha Motor Co., Ltd.
1st edition, July 2003
All rights reserved.
Any reprinting or unauthorized use
without the written permission of
Yamaha Motor Co., Ltd.
is expressly prohibited.
Printed in Japan.

E115A/E115A-TUNA
CATALOGO DE REPUESTOS
©2003 por Yamaha Motor Co., Ltd.
1ª edición, julio 2003
Todos los derechos reservados.
Toda reproducción o uso no autorizado
sin el consentimiento escrito de
Yamaha Motor Co., Ltd.
quedan expresamente prohibidos
Impreso en Japón.