YAMAHA

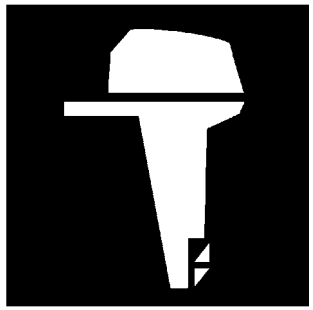

PARTS CATALOGUE

F100CET'04 (60D4)

1C60D-664E2

( )

YAMAHA GENUINE Parts & Accessories

FOREWORD

This Parts Catalogue is related to the parts for the model(s) on the cover page. When you are ordering replacement parts, please refer to this Parts Catalogue and quote both part numbers and part names correctly.

1. Modifications or additions which have been made after the issue of the Parts Catalogue will be announced in the Parts News.
   It is advisable that you make the necessary corrections to the Parts Catalogue according to the Parts News.

2. Abbreviations
   The following abbreviations are used in this Parts Catalogue.

   "UR" Use specified parts number.
   "UN" Use as many as needed.
   "AP" Alternate Parts
   "LM" Locally Made (Parts need to be ordered locally)
   "F#" Frame No. (Applicable machine No.)
   "O/S" Over Size

3. The number of components for assembly
   - Parts, which are to be supplied in an assembly, are listed with a dot (.) in front of the part name as shown below.
   - The numeral appearing to the right of each component part indicates the quantity of parts for each assembly unit.

PART NO.	DESCRIPTION	Q'TY	REMARKS
2F5–83310–60	FRONT FLASHER LIGHT ASSY	2	
115–83311–60	.BULB (6V–18W)	1	

4. Applicable colours of graphics are represented in the "REMARKS" as shown below.

PART NO.	DESCRIPTION	Q'TY	REMARKS
2N4–24110–00–X5	FUEL TANK COMP.	2	MXR
3J1–24240–10	.GRAPHIC, FUEL TANK	1	FOR MXR

5. Note that the illustrations for reference in finding parts numbers are not to be used for assembling. When assembling, please use the applicable service manual.

6. The asterisk (*) before a reference number indicates modified items after the first edition.

7. Applicable Serial No.

   Engine Serial No.

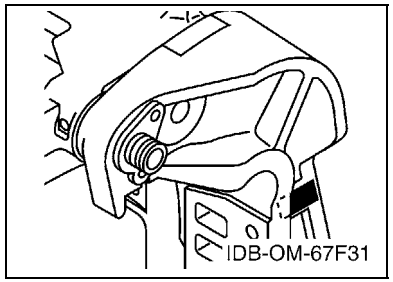

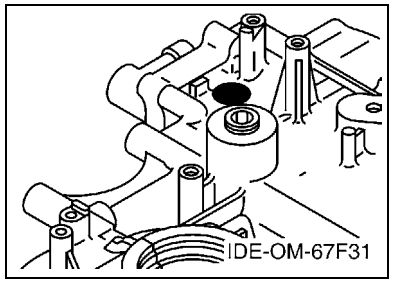

8. Applicable Engine Starting Serial No.

Model	Serial No.	Model	Serial No.
F100C	60D-1000133		

9. Applicable Colour Code

Abbreviation	Colour Name	Colour Code
DBNM2	DARK BLUISH GRAY METALLIC 2	004D

10. Quantity Column Information

Column No.	Name Of Q'ty Column	Applicable Model
1	60D4	F100CET

CONTENTS

TOP COWLING 1
CYLINDER & CRANKCASE 1 2
CRANKSHAFT & PISTON 4
CYLINDER & CRANKCASE 2 5
VALVE 7
INTAKE 10
CARBURETOR 1 11
CARBURETOR 2 13
FUEL 14
GENERATOR 16
ELECTRICAL 1 17
ELECTRICAL 2 19
ELECTRICAL 3 21
ELECTRICAL 4 23
STARTING MOTOR 24
BOTTOM COWLING 26
STEERING 1 28
STEERING 2 31
STEERING FRICTION 33
CONTROL 34
BRACKET 1 36
BRACKET 2 38
OPTIONAL PARTS 40
POWER TRIM & TILT ASSY 1 41
POWER TRIM & TILT ASSY 2 45
UPPER CASING 46
OIL PAN 48
LOWER CASING & DRIVE 1 50
LOWER CASING & DRIVE 2 53
FUEL TANK 55
STEERING GUIDE 56
REMOTE CONTROL BOX 57
REMOTE CONTROL ASSY 58
METER 61
REPAIR KIT 1 62
REPAIR KIT 2 63
REPAIR KIT 3 64

INDEX

NUMERICAL INDEX 66

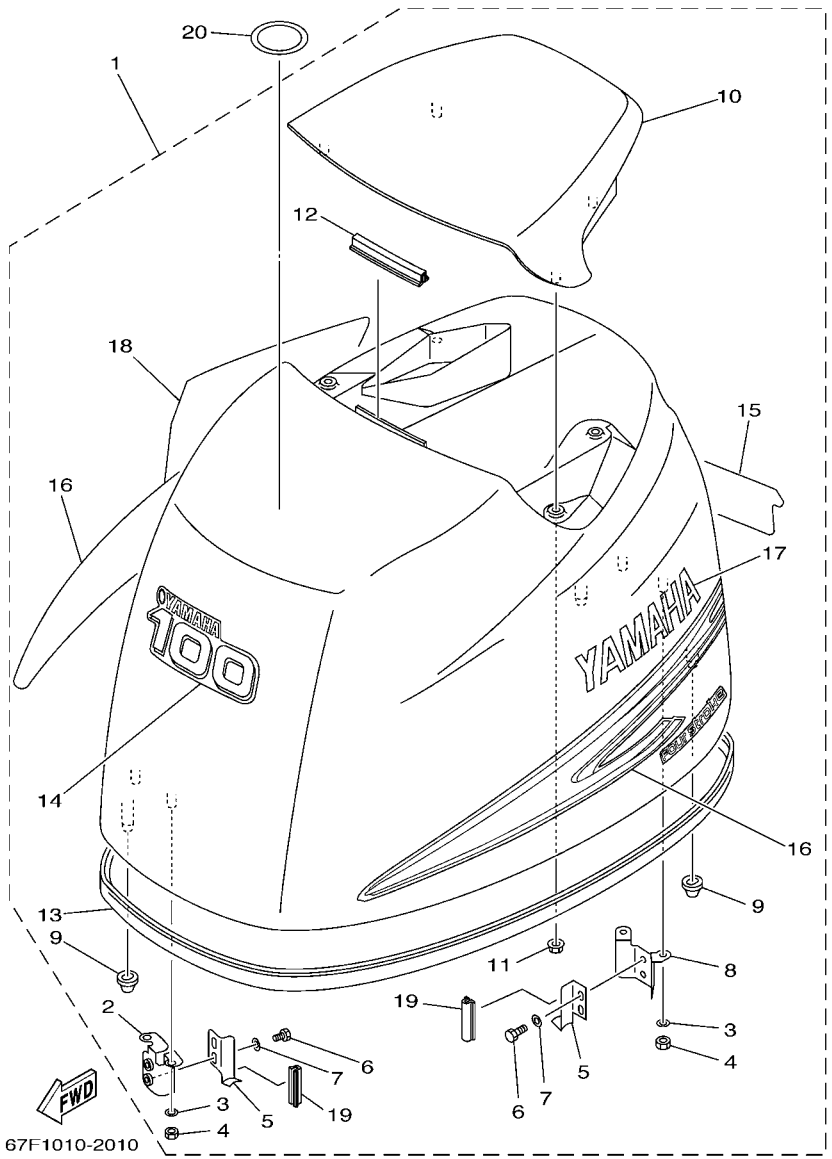

FIG. 1 TOP COWLING

REF. NO.	PART NO.	DESCRIPTION	60D4					REMARKS
1	67F–42610–10–4D	TOP COWLING ASSY	1					
2	67F–42647–00	.HOLDER, CLAMP BAND	1					
3	92990–06100	.WASHER, SPRING	4					
4	95380–06600	.NUT, HEXAGON	4					
5	67F–42652–00	.HOOK	2					
6	97095–06012	.BOLT	4					
7	92995–06600	.WASHER	4					
8	67F–42649–00	.HOLDER, CLAMP BAND	1					
9	67F–42662–00	.DAMPER	3					
10	67F–42613–00–4D	.MOLDING, AIR DUCT	1					
11	90179–06M24	.NUT	4					
12	61N–42628–00	.SEAL	1					
13	67F–42615–00	.SEAL	1					
14	67F–42677–10	.GRAPHIC, FRONT	1					
15	67F–42678–10	.GRAPHIC, REAR	1					
16	67F–W0070–10	.GRAPHIC SET	1					
17	67F–42681–10	.MARK, COWLING	1					
18	67F–42682–10	.MARK, COWLING	1					
19	67F–42628–00	.SEAL	2					
20	67F–13434–02	LABEL, CAUTION	1					

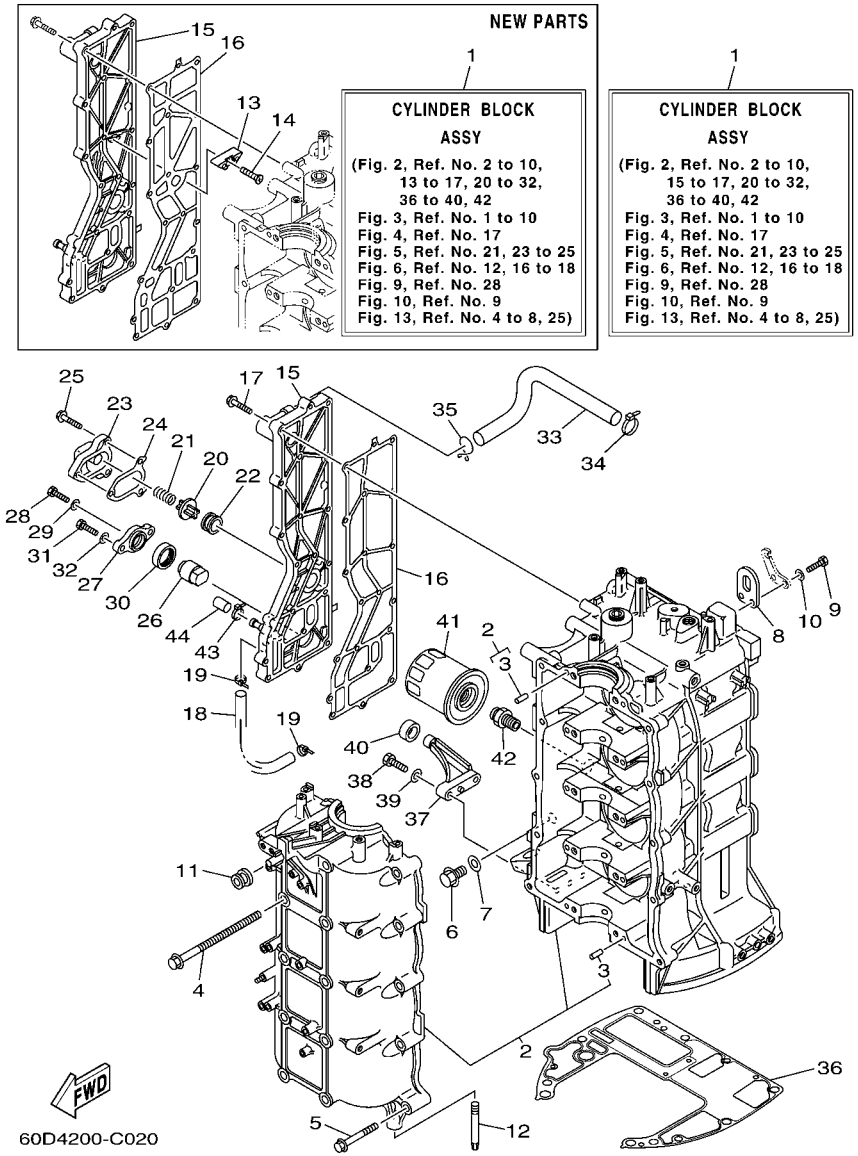

*1: NEW PARTS
STARTING SERIAL NO. : 60D-1000187 ~

FIG. 2 CYLINDER & CRANKCASE 1

REF. NO.	PART NO.	DESCRIPTION	60D4					REMARKS
1	60C–W009B–01–1S	CYLINDER BLOCK ASSY	1					
	60C–W009B–02–1S	CYLINDER BLOCK ASSY	1					NEW PARTS *1
2	67F–15100–03–1S	CRANKCASE ASSY	1					
3	93606–12019	.PIN, DOWEL	10					
4	90119–10M88	BOLT, WITH WASHER	10					
5	90119–08M66	BOLT, WITH WASHER	10					
6	90340–14M06	PLUG, STRAIGHT SCREW	1					
7	90430–14115	GASKET	1					
8	62Y–11119–00	HANGER, ENGINE	2					
9	97095–06020	BOLT	4					
10	92995–06600	WASHER	4					
11	90480–12072	GROMMET	1					
12	67F–15142–00	GUIDE 1	2					
13	6E5–11325–00	ANODE	3					NEW PARTS *1
14	98780–04016	SCREW, FLAT HEAD	3					NEW PARTS *1
15	67F–41113–01–1S	OUTER COVER, EXHAUST	1					
	67F–41113–02–1S	OUTER COVER, EXHAUST	1					NEW PARTS *1
16	67F–41114–A0	GASKET, EXHAUST OUTER COVER	1					
	67F–41114–A1	GASKET, EXHAUST OUTER COVER	1					NEW PARTS *1
17	90119–06MA4	BOLT, WITH WASHER	18					
18	90445–10M40	HOSE (L330)	1					
19	90465–11M10	CLAMP	2					
20	6G5–12416–00	VALVE, PRESSURE CONTROL	1					
21	90501–16M11	SPRING, COMPRESSION	1					
22	90480–20M05	GROMMET	1					
23	67F–1246A–00–1S	COVER 1	1					
24	67F–12435–A0	GASKET	1					

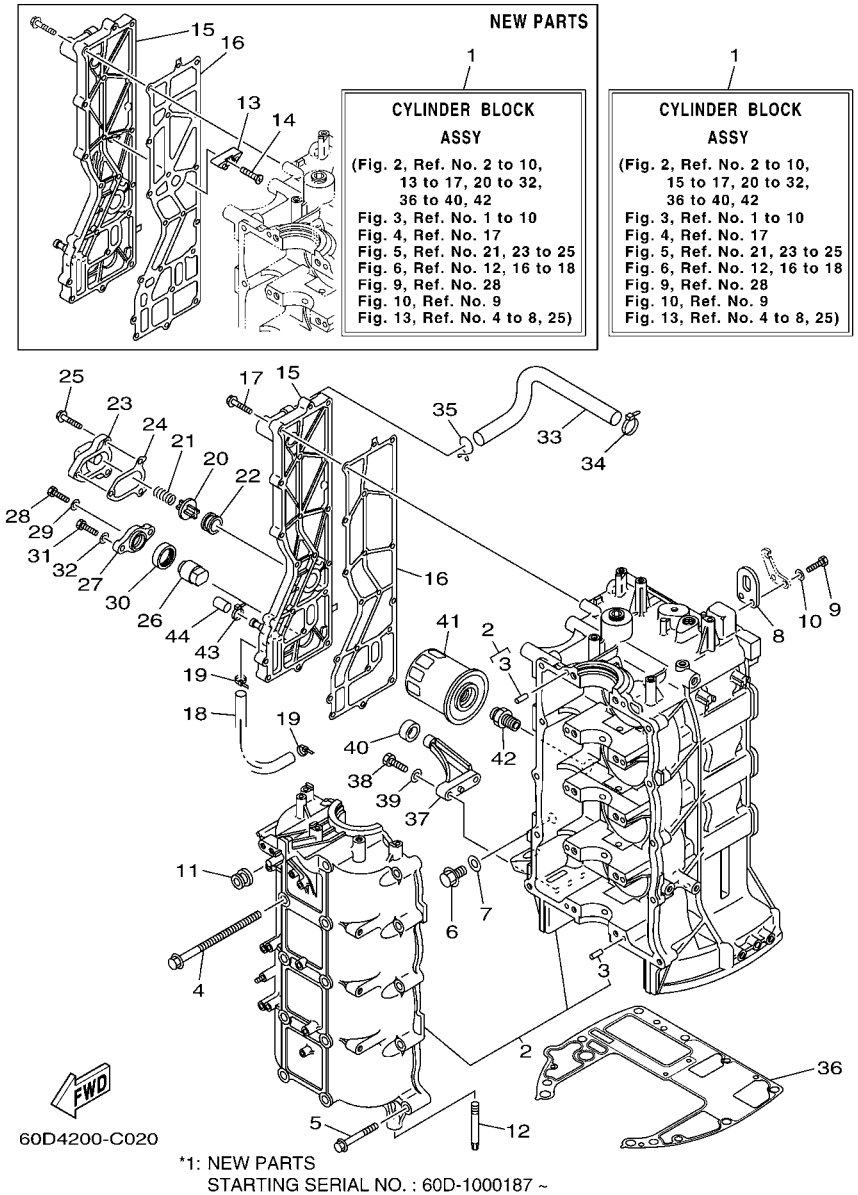

*1: NEW PARTS
STARTING SERIAL NO. : 60D-1000187 ~

FIG. 2 CYLINDER & CRANKCASE 1

REF. NO.	PART NO.	DESCRIPTION	60D4					REMARKS
25	90119–06MA2	BOLT, WITH WASHER	3					
26	68V–11325–00	ANODE	1					
27	67F–11327–00–94	COVER, ANODE	1					
28	97075–06020	BOLT	1					
29	92995–06600	WASHER	1					
30	67F–11328–00	GROMMET, ANODE	1					
31	97075–08025	BOLT	2					
32	92995–08600	WASHER	2					
33	67F–1243A–00	HOSE 1	1					
34	90465–11M10	CLAMP	1					
35	90467–20M15	CLIP	1					
36	68V–11351–00	GASKET, CYLINDER	1					
37	67F–42761–00–94	STOPPER	2					
38	97095–06025	BOLT	4					
39	92995–06600	WASHER	4					
40	68F–44533–00	DAMPER, UPPER MOUNT RUBBER	2					
41	5GH–13440–00	ELEMENT ASSY, OIL CLEANER	1					
42	90401–20145	BOLT, UNION	1					
43	90465–11M10	CLAMP	1					
44	67F–13448–00	CAP	1					

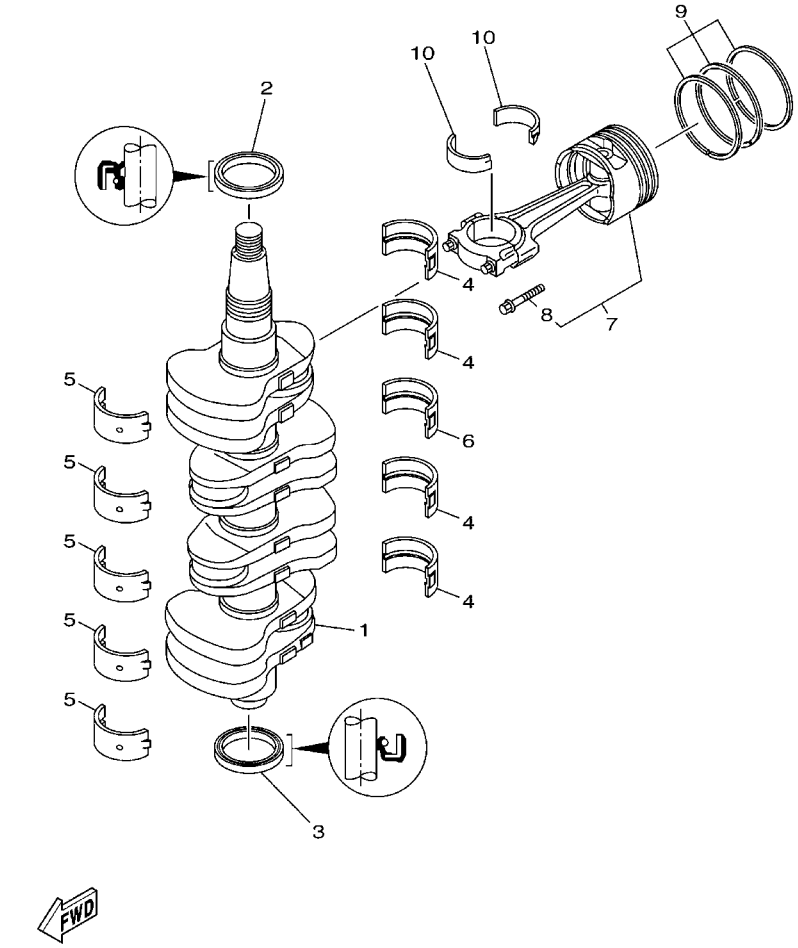

FIG. 3 CRANKSHAFT & PISTON

REF. NO.	PART NO.	DESCRIPTION	60D4					REMARKS
1	67F–11411–00	CRANKSHAFT	1					
2	93102–48008	OIL SEAL	1					
3	93101–48001	OIL SEAL	1					
4	67F–11416–00	PLANE BEARING, CRANKSHAFT 1	4					UR GREEN
	67F–11416–10	PLANE BEARING, CRANKSHAFT 1	4					UR BLUE
	67F–11416–20	PLANE BEARING, CRANKSHAFT 1	4					UR RED
5	67F–11417–00	PLANE BEARING, CRANKSHAFT 2	5					UR YELLOW
	67F–11417–10	PLANE BEARING, CRANKSHAFT 2	5					UR GREEN
	67F–11417–20	PLANE BEARING, CRANKSHAFT 2	5					UR BLUE
	67F–11417–30	PLANE BEARING, CRANKSHAFT 2	5					UR RED
6	67F–11418–00	PLANE BEARING, CRANKSHAFT 3	1					UR GREEN
	67F–11418–10	PLANE BEARING, CRANKSHAFT 3	1					UR BLUE
	67F–11418–20	PLANE BEARING, CRANKSHAFT 3	1					UR RED
7	60C–W1164–00	PISTON/CON-ROD ASSY(STD)	4					
	60C–W1164–10	PISTON/CON-ROD ASSY(0.25MM OS)	4					AP
8	67F–11654–00	.BOLT, CONNECTING ROD	2					
9	60C–11603–00	PISTON RING SET (STD)	4					
	60C–11604–00	PISTON RING SET (0.25MM O/S)	4					AP
10	67F–11656–00	PLANE BEARING, CONNECTING ROD	8					UR YELLOW
	67F–11656–10	PLANE BEARING, CONNECTING ROD	8					UR GREEN
	67F–11656–20	PLANE BEARING, CONNECTING ROD	8					UR BLUE
	67F–11656–30	PLANE BEARING, CONNECTING ROD	8					UR RED

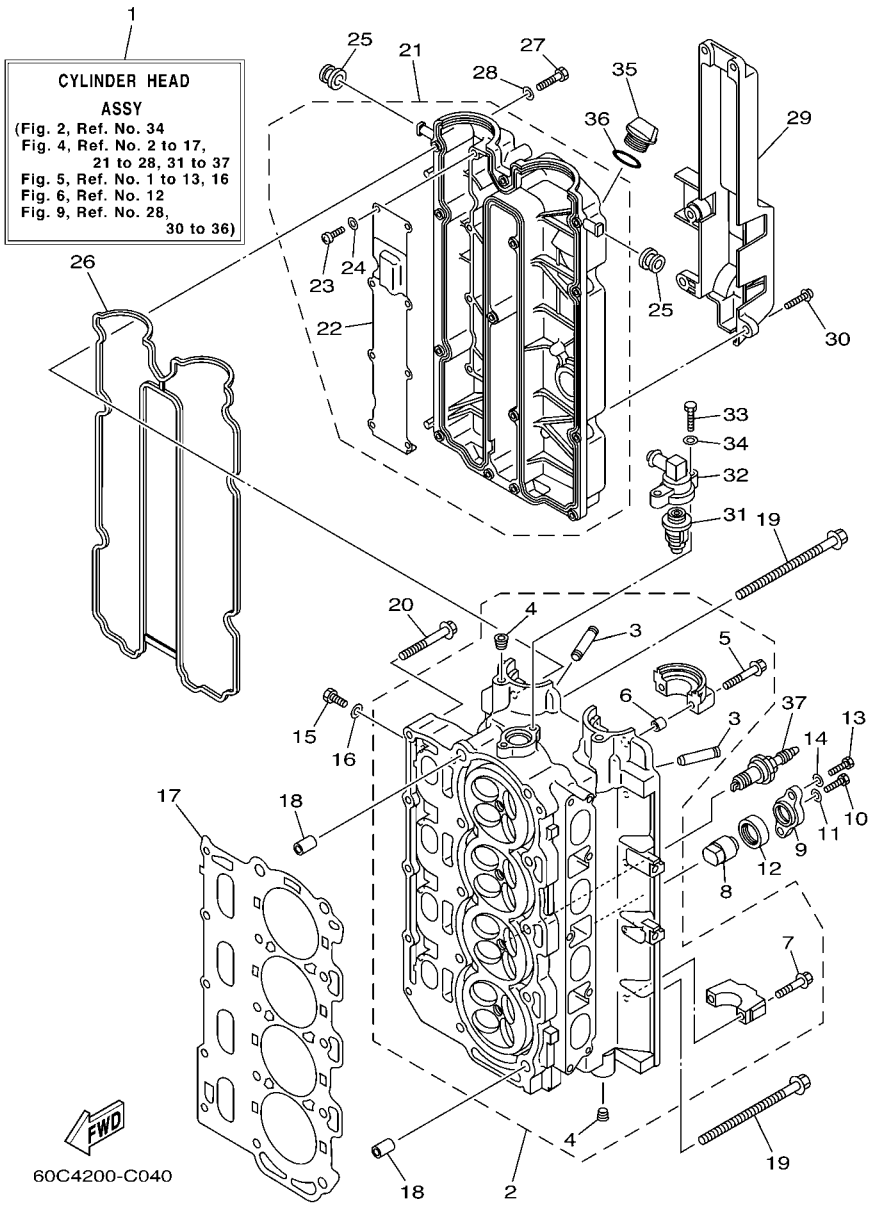

FIG. 4 CYLINDER & CRANKCASE 2

REF. NO.	PART NO.	DESCRIPTION	60D4					REMARKS
1	60C–W009A–02–1S	CYLINDER HEAD ASSY	1					
2	67F–11110–11–94	CYLINDER HEAD ASSY	1					
3	67F–11133–10	.GUIDE, VALVE 1	16					
4	90344–51019	.PLUG, TAPER SCREW	4					
5	90119–07235	.BOLT/WASHER-CAM CAPS	4					
6	91809–08006	.SLEEVE GUIDE-DOWEL	4					
7	90119–07234	.BOLT, WITH WASHER	16					
8	68V–11325–00	ANODE	2					
9	67F–11327–00–94	COVER, ANODE	2					
10	97075–06020	BOLT	2					
11	92995–06600	WASHER	2					
12	67F–11328–00	GROMMET, ANODE	2					
13	97075–08025	BOLT	4					
14	92995–08600	WASHER	4					
15	97095–08014	BOLT	4					
16	90430–08143	GASKET	4					
17	67F–11181–02	GASKET, CYLINDER HEAD 1	1					
18	90387–10M08	COLLAR	2					
19	90105–10M89	BOLT, FLANGE	10					
20	90119–08M91	BOLT, WITH WASHER	5					
21	68V–11191–00–1S	COVER, CYLINDER HEAD 1	1					
22	67F–11168–00	.COVER, BREATHER	1					
23	98507–04008	.SCREW, PAN HEAD	8					
24	92907–04600	.WASHER	8					
25	90480–12072	GROMMET	2					
26	67F–11356–00	SEAL, CYLINDER 2	1					
27	97095–06030	BOLT	14					

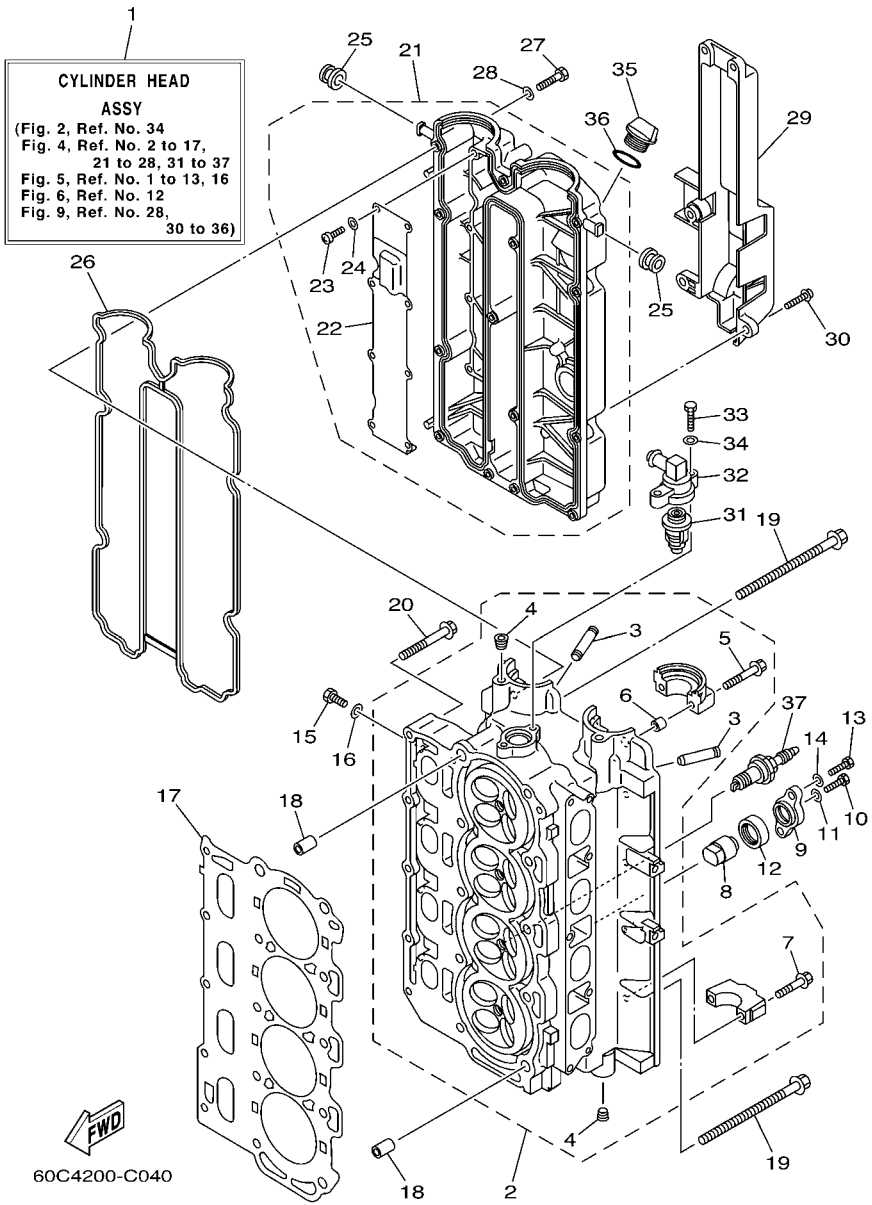

FIG. 4 CYLINDER & CRANKCASE 2

REF. NO.	PART NO.	DESCRIPTION	60D4					REMARKS
28	92995–06600	WASHER	14					
29	67F–11192–00	COVER, CYLINDER HEAD 2	1					
30	90159–06M29	SCREW, WITH WASHER	5					
31	68V–12411–00	THERMOSTAT	1					
32	68V–12413–00–1S	COVER, THERMOSTAT	1					
33	97095–06025	BOLT	2					
34	92995–06600	WASHER	2					
35	6G8–15363–00	PLUG, OIL	1					
36	93210–24M79	O-RING	1					
37	94702–00391	PLUG, SPARK (NGK LFR5A-11)	4					

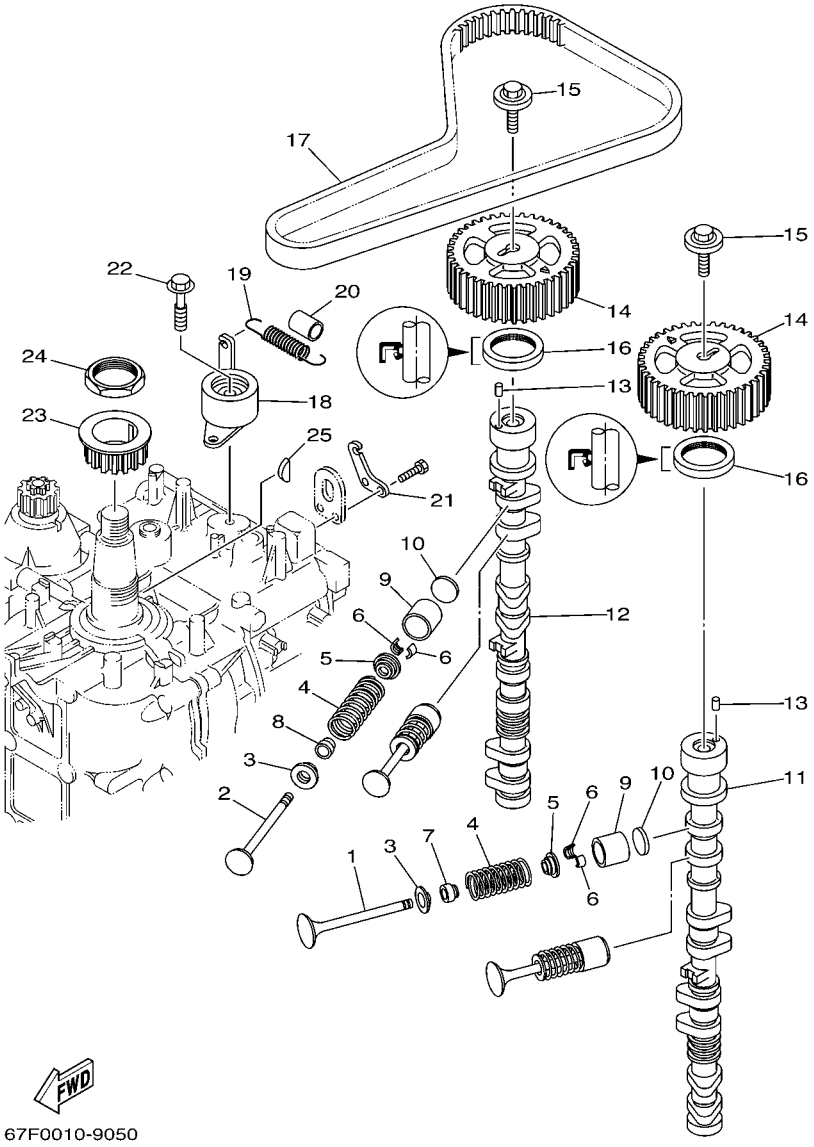

FIG. 5 VALVE

REF. NO.	PART NO.	DESCRIPTION	60D4					REMARKS
1	68V–12111–00	VALVE, INTAKE	8					
2	68V–12121–00	VALVE, EXHAUST	8					
3	67F–12116–00	SEAT, VALVE SPRING	16					
4	67F–12114–00	SPRING, VALVE OUTER	16					
5	67F–12117–00	RETAINER, VALVE SPRING	16					
6	67F–12118–00	COTTER, VALVE	32					
7	K0A–A3721–00	SEAL, VALVE STEM	8					
8	K0A–A3722–00	SEAL, VALVE STEM 2	8					
9	67F–12153–00	LIFTER, VALVE	16					
10	67F–12168–00	PAD, ADJUSTING (2.000)	16					UR
	67F–12168–10	PAD, ADJUSTING (2.025)	16					UR
	67F–12168–20	PAD, ADJUSTING (2.050)	16					UR
	67F–12168–30	PAD, ADJUSTING (2.075)	16					UR
	67F–12168–40	PAD, ADJUSTING (2.100)	16					UR
	67F–12168–50	PAD, ADJUSTING (2.125)	16					UR
	67F–12168–60	PAD, ADJUSTING (2.150)	16					UR
	67F–12168–70	PAD, ADJUSTING (2.175)	16					UR
	67F–12168–80	PAD, ADJUSTING (2.200)	16					UR
	67F–12168–A0	PAD, ADJUSTING (2.225)	16					UR
	67F–12168–B0	PAD, ADJUSTING (2.250)	16					UR
	67F–12168–C0	PAD, ADJUSTING (2.275)	16					UR
	67F–12168–D0	PAD, ADJUSTING (2.300)	16					UR
	67F–12168–E0	PAD, ADJUSTING (2.325)	16					UR
	67F–12168–F0	PAD, ADJUSTING (2.350)	16					UR
	67F–12168–G0	PAD, ADJUSTING (2.375)	16					UR
	67F–12168–H0	PAD, ADJUSTING (2.400)	16					UR
	67F–12168–J0	PAD, ADJUSTING (2.425)	16					UR

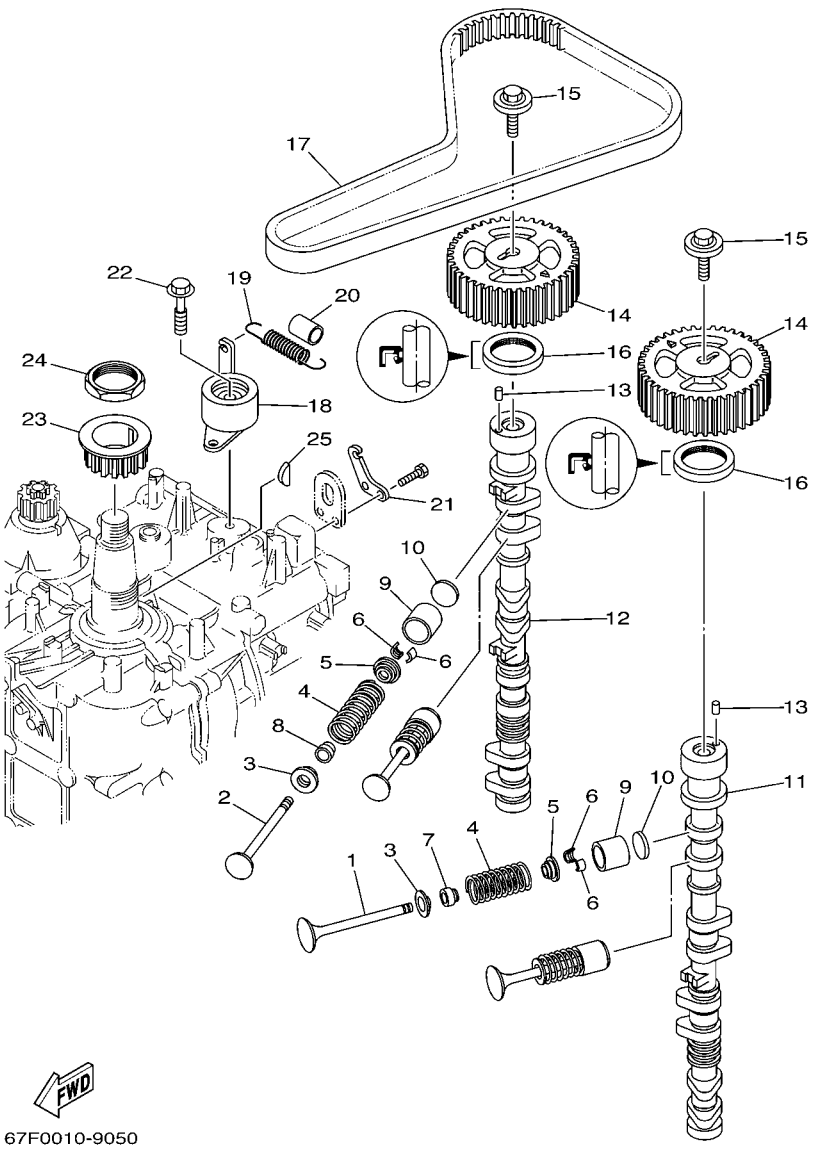

FIG. 5 VALVE

REF. NO.	PART NO.	DESCRIPTION	60D4					REMARKS
10	67F–12168–K0	PAD, ADJUSTING (2.450)	16					UR
	67F–12168–L0	PAD, ADJUSTING (2.475)	16					UR
	67F–12168–M0	PAD, ADJUSTING (2.500)	16					UR
	67F–12168–N0	PAD, ADJUSTING (2.525)	16					UR
	67F–12168–P0	PAD, ADJUSTING (2.550)	16					UR
	67F–12168–R0	PAD, ADJUSTING (2.575)	16					UR
	67F–12168–S0	PAD, ADJUSTING (2.600)	16					UR
	67F–12168–T0	PAD, ADJUSTING (2.625)	16					UR
	67F–12168–U0	PAD, ADJUSTING (2.650)	16					UR
	67F–12168–V0	PAD, ADJUSTING (2.675)	16					UR
	67F–12168–W0	PAD, ADJUSTING (2.700)	16					UR
	67F–12168–X0	PAD, ADJUSTING (2.725)	16					UR
	67F–12168–Y0	PAD, ADJUSTING (2.750)	16					UR
	67F–12169–00	PAD, ADJUSTING (2.775)	16					UR
	67F–12169–10	PAD, ADJUSTING (2.800)	16					UR
	67F–12169–20	PAD, ADJUSTING (2.825)	16					UR
	67F–12169–30	PAD, ADJUSTING (2.850)	16					UR
	67F–12169–40	PAD, ADJUSTING (2.875)	16					UR
	67F–12169–50	PAD, ADJUSTING (2.900)	16					UR
	67F–12169–60	PAD, ADJUSTING (2.925)	16					UR
	67F–12169–70	PAD, ADJUSTING (2.950)	16					UR
	67F–12169–80	PAD, ADJUSTING (2.975)	16					UR
	67F–12169–A0	PAD, ADJUSTING (3.000)	16					UR
	67F–12169–B0	PAD, ADJUSTING (3.025)	16					UR
	67F–12169–C0	PAD, ADJUSTING (3.050)	16					UR
	67F–12169–D0	PAD, ADJUSTING (3.075)	16					UR
	67F–12169–E0	PAD, ADJUSTING (3.100)	16					UR

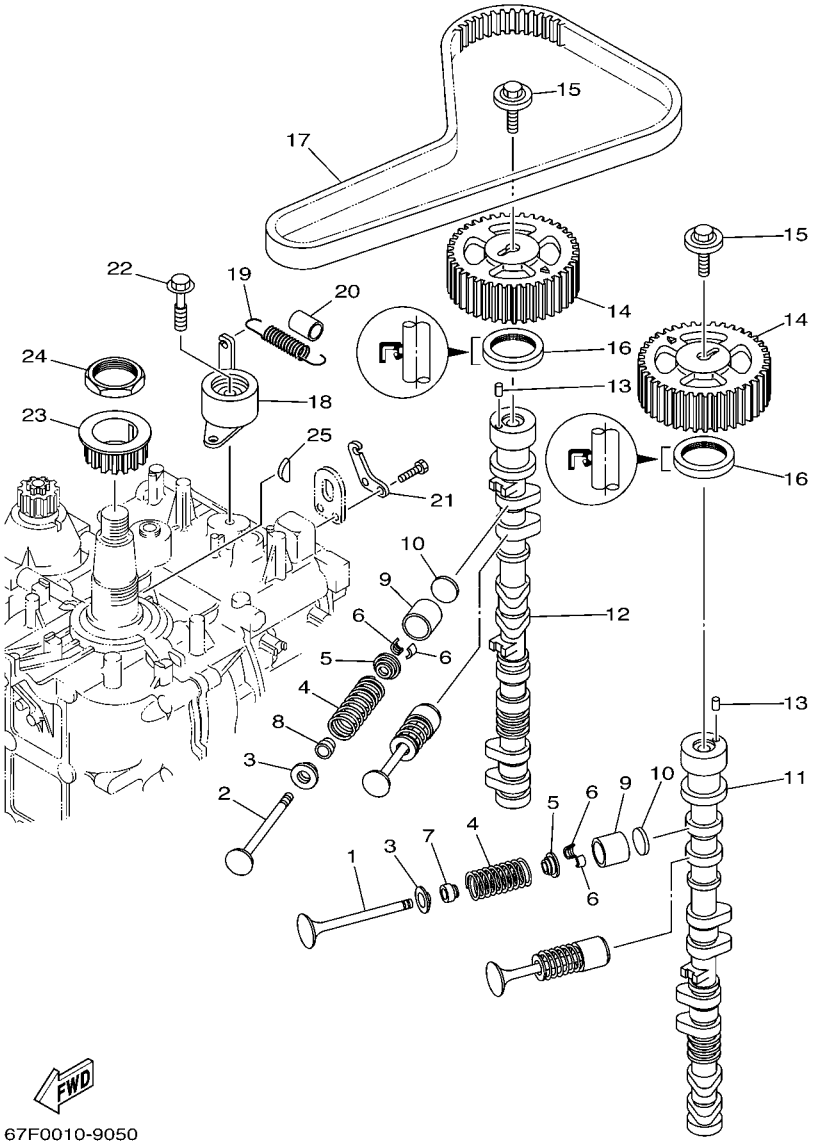

FIG. 5 VALVE

REF. NO.	PART NO.	DESCRIPTION	60D4					REMARKS
10	67F–12169–F0	PAD, ADJUSTING (3.125)	16					UR
	67F–12169–G0	PAD, ADJUSTING (3.150)	16					UR
	67F–12169–H0	PAD, ADJUSTING (3.175)	16					UR
	67F–12169–J0	PAD, ADJUSTING (3.200)	16					UR
	67F–12169–K0	PAD, ADJUSTING (3.225)	16					UR
	67F–12169–L0	PAD, ADJUSTING (3.250)	16					UR
	67F–12169–M0	PAD, ADJUSTING (3.275)	16					UR
	67F–12169–N0	PAD, ADJUSTING (3.300)	16					UR
11	67F–12171–00	CAMSHAFT 1	1					
12	67F–12181–00	CAMSHAFT 2	1					
13	93605–10108	PIN, DOWEL	2					
14	67F–11537–00	GEAR, DRIVEN	2					
15	90119–10M06	BOLT, WITH WASHER	2					
16	93102–38M59	OIL SEAL	2					
17	67F–46241–00	BELT	1					
18	67F–11590–00	TENSIONER ASSY	1					
19	90506–16M39	SPRING, TENSION	1					
20	90445–15M03	HOSE (L23)	1					
21	67F–11595–00	PLATE,VALVE	1					
22	90119–10M72	BOLT, WITH WASHER	1					
23	67F–11536–00	GEAR, DRIVE	1					
24	90170–40003	NUT	1					
25	90280–04008	KEY, WOODRUFF	1					

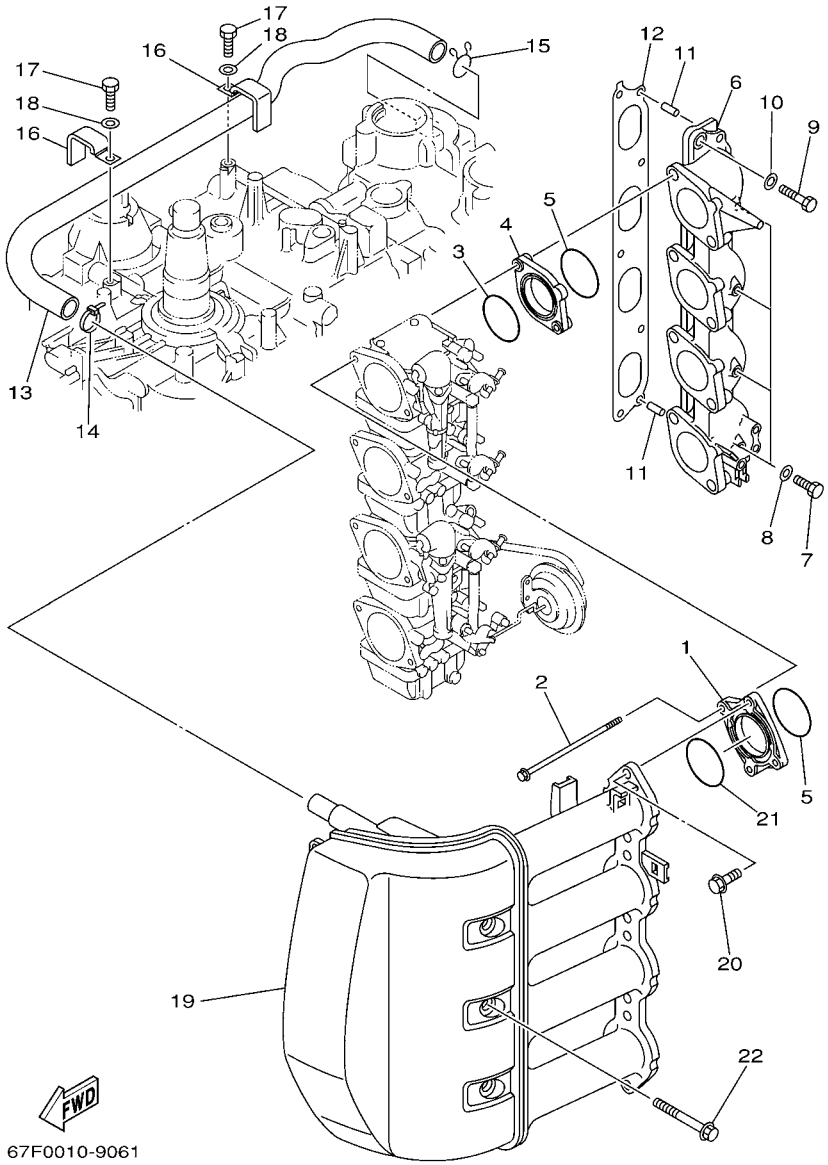

FIG. 6 INTAKE

REF. NO.	PART NO.	DESCRIPTION	60D4					REMARKS
1	67F–14243–00	PLATE	4					
2	67F–14216–00	BOLT	8					
3	67F–14239–00	SEAL	4					
4	67F–14271–00	INSULATOR	4					
5	93210–40M10	O-RING	8					
6	67F–13641–00–94	MANIFOLD 1	1					
7	97095–06010	BOLT	4					
8	90430–06014	GASKET	4					
9	97075–08035	BOLT	5					
10	92995–08600	WASHER	5					
11	91690–50014	PIN, SPRING	2					
12	67F–13645–00	GASKET, MANIFOLD 1	1					
13	67F–15373–00	PIPE, BREATHER	1					
14	90465–11M10	CLAMP	1					
15	90467–20M15	CLIP	1					
16	90465–12M03	CLAMP	2					
17	97095–06012	BOLT	2					
18	92995–06600	WASHER	2					
19	67F–14440–00	SILENCER ASSY, INTAKE	1					
20	90119–06M82	BOLT, WITH WASHER	8					
21	93210–41MJ2	O-RING	4					
22	90119–08M59	BOLT, WITH WASHER	3					

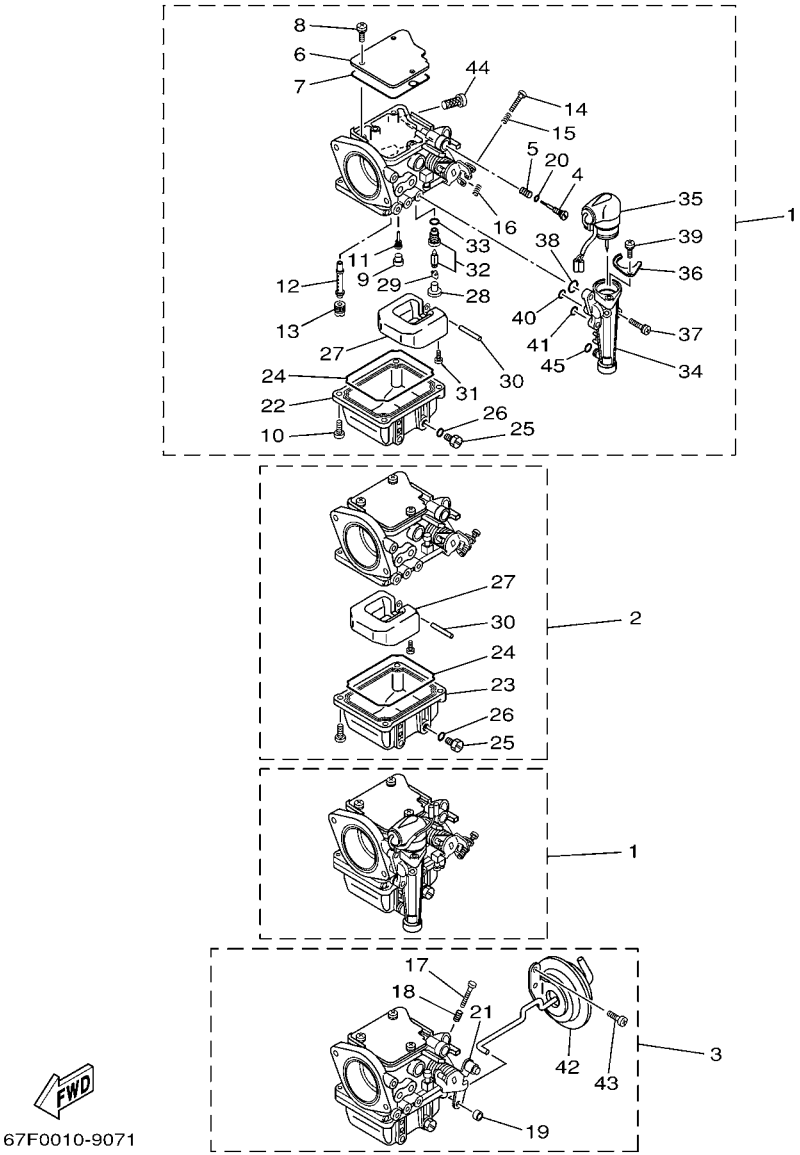

FIG. 7 CARBURETOR 1

REF. NO.	PART NO.	DESCRIPTION	60D4					REMARKS
1	60C–14901–00	CARBURETOR ASSY 1	2					#1,3
2	60C–14902–00	CARBURETOR ASSY 2	1					#2
3	60C–14904–00	CARBURETOR ASSY 4	1					#4
4	67F–14923–00	.SCREW, PILOT	4					
5	697–14555–00	.SPRING	4					
6	67F–14146–00	.PLATE	4					
7	67F–14147–00	.O-RING	4					
8	97803–04010	.SCREW, PAN HEAD	12					
9	676–14966–00	.CAP	4					
10	97980–04114	.SCREW, WITH WASHER	16					
11	67F–14948–04	.JET (#42)	4					
12	67F–14947–00	.JET, NEEDLE	4					
13	67F–14943–83	.JET, MAIN (#128)	4					
14	67F–14567–00	.SCREW	3					#1,2,3
15	67F–14555–00	.SPRING	3					#1,2,3
16	67F–14556–00	.SPRING	3					#1,2,3
17	63V–14523–00	.SCREW, STOP	1					#4
18	90501–10326	.SPRING, COMPRESSION	1					#4
19	67F–14998–00	.BUSH	1					#4
20	67F–14397–00	.O-RING	4					
21	6H2–14578–00	.COLLAR	1					#4
22	67F–14980–00	.BODY, FLOAT CHAMBER	2					#1,3
23	67F–14980–10	.BODY, FLOAT CHAMBER	2					#2,4
24	67F–14984–00	.GASKET, FLOAT CHAMBER	4					
25	6H3–14992–00	.SCREW, DRAIN	4					
26	93210–04230	.O-RING	4					
27	6H4–14985–01	.FLOAT	4					

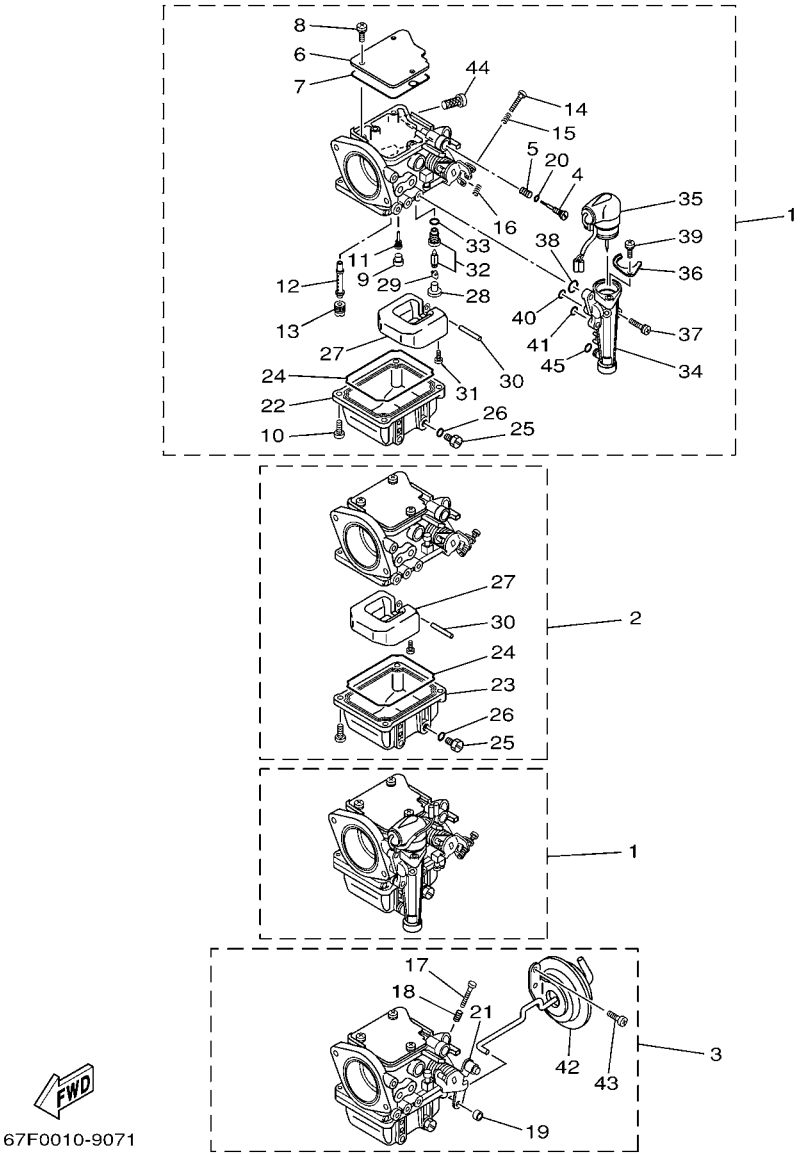

FIG. 7 CARBURETOR 1

REF. NO.	PART NO.	DESCRIPTION	60D4					REMARKS
28	676–14186–00	.PIN, FLOAT	4					
29	67F–14159–00	.CLIP	4					
30	6H4–14548–00	.PIN, FLOAT ARM	4					
31	98580–04008	.SCREW, PAN HEAD	4					
32	60C–14590–01	.NEEDLE VALVE ASSY	4					
33	93210–04228	.O-RING	4					
34	67F–14378–00	.BODY, STARTER	2					#1,3
35	67F–14380–01	.PRIME STARTER ASSY	2					#1,3
36	67F–14178–00	.PLATE, STARTER LEVER	2					#1,3
37	67F–14592–00	.SCREW	6					#1,3
38	67F–14398–00	.O-RING	2					#1,3
39	67F–14565–00	.SCREW	2					#1,3
40	67F–14398–10	.O-RING	2					#1,3
41	67F–14398–20	.O-RING	2					#1,3
42	67F–14369–00	.DIAPHRAGM ASSY 2	1					#4
43	67F–14325–00	.SCREW, PAN HEAD	2					#4
44	67F–14371–01	.ELEMENT, FILTER	4					
45	67F–14398–30	.O-RING	2					#1,3

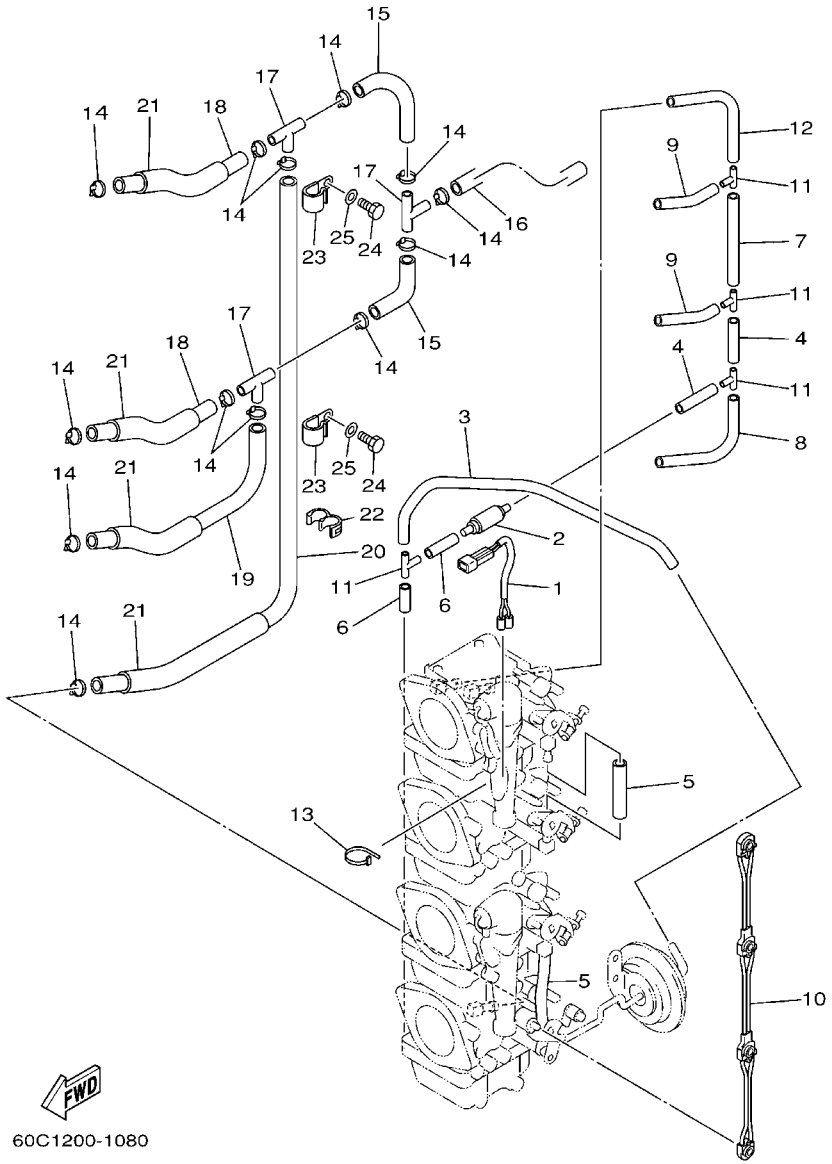

FIG. 8 CARBURETOR 2

REF. NO.	PART NO.	DESCRIPTION	60D4					REMARKS
1	67F–1412A–00	WIRE HARNESS ASSY	1					
2	67F–13183–00	VALVE, CHECK	1					
3	67F–14349–00	PIPE	1					
4	67F–14349–10	PIPE	2					
5	67F–14349–20	PIPE	2					
6	67F–14349–30	PIPE	2					
7	67F–14349–40	PIPE	1					
8	67F–14349–50	PIPE	1					
9	67F–14349–60	PIPE	2					
10	67F–14585–00	ROD, CHOKE	1					
11	67F–14189–00	CONNECTOR	4					
12	67F–14349–70	PIPE	1					
13	90465–11M59	CLAMP	1					
14	68F–24356–00	CLIP, PIPE 1	13					
15	60C–14294–00	HOSE	2					
16	60C–14298–00	PIPE	1					
17	688–24378–00	PIPE, JOINT 4	3					
18	90445–10M16	HOSE (L120)	2					
19	90445–10MG6	HOSE (L180)	1					
20	90445–10MG7	HOSE (L350)	1					
21	90445–16M07	HOSE (L80)	4					
22	90464–10M57	CLAMP	1					
23	90465–08M83	CLAMP	2					
24	97095–06012	BOLT	2					
25	92995–06600	WASHER	2					

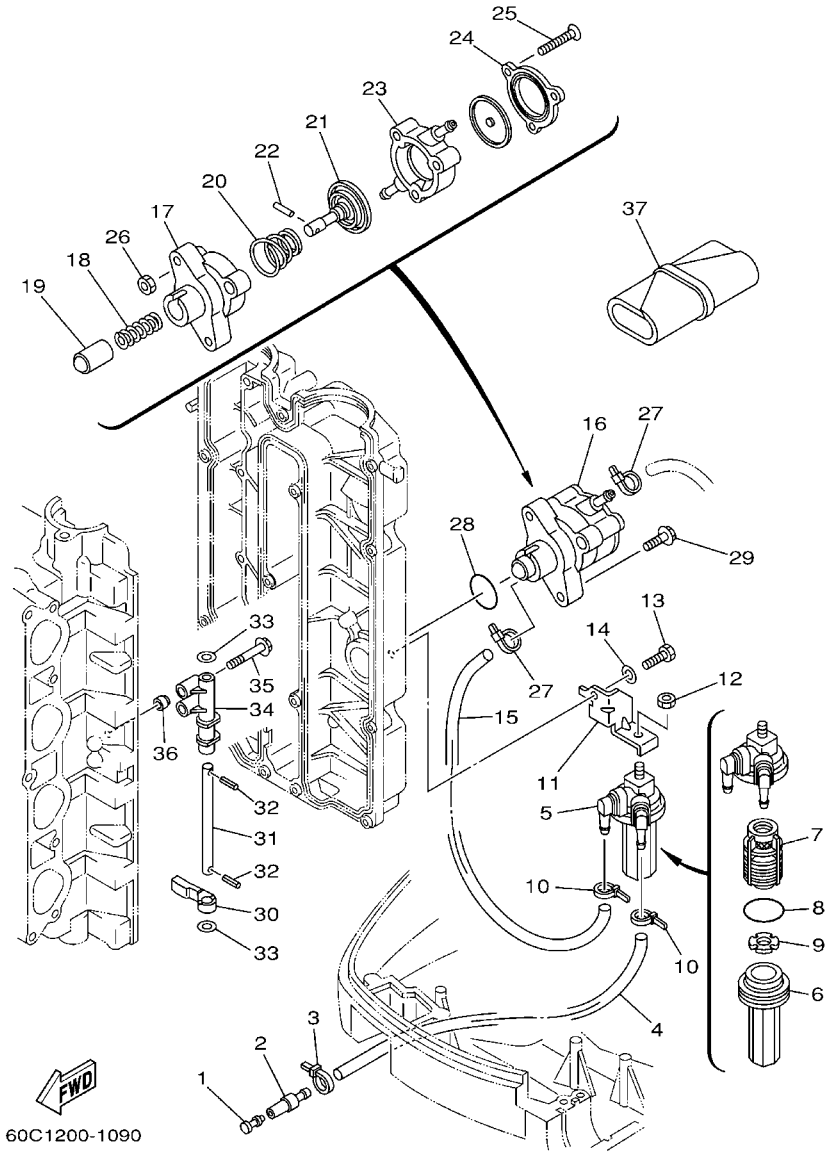

FIG. 9 FUEL

REF. NO.	PART NO.	DESCRIPTION	60D4					REMARKS
1	689–85547–00	DAMPER	1					
2	6R3–24377–00	PIPE, JOINT 3	1					
3	90465–11M10	CLAMP	1					
4	90445–13M27	HOSE (L950)	1					
5	60C–24560–00	FILTER ASSY	1					
6	68V–24521–01	.CUP, FILTER	1					
7	61N–24563–00	.ELEMENT, FILTER	1					
8	93210–32738	.O-RING	1					
9	68V–24469–01	.FLOAT, WATER LEVEL	1					
10	90465–11M10	CLAMP	2					
11	68V–24566–00	BRACKET, FILTER	1					
12	95380–08600	NUT	1					
13	97095–06016	BOLT	1					
14	92995–06600	WASHER	1					
15	90445–13M11	HOSE (L300)	1					
16	68V–24410–00	FUEL PUMP ASSY	1					
17	68V–24412–00	.BODY 1	1					
18	68V–24454–00	.SPRING	1					
19	68V–13131–00	.PLUNGER	1					
20	68V–24423–00	.SPRING, DIAPHRAGM	1					
21	68V–24411–00	.DIAPHRAGM	1					
22	68V–24374–00	.PIN	1					
23	68V–24413–00	.BODY 2	1					
24	68V–24414–00	.BODY 3	1					
25	68V–24444–00	.SCREW	3					
26	68V–24149–00	.NUT	3					
27	90465–11M10	CLAMP	2					

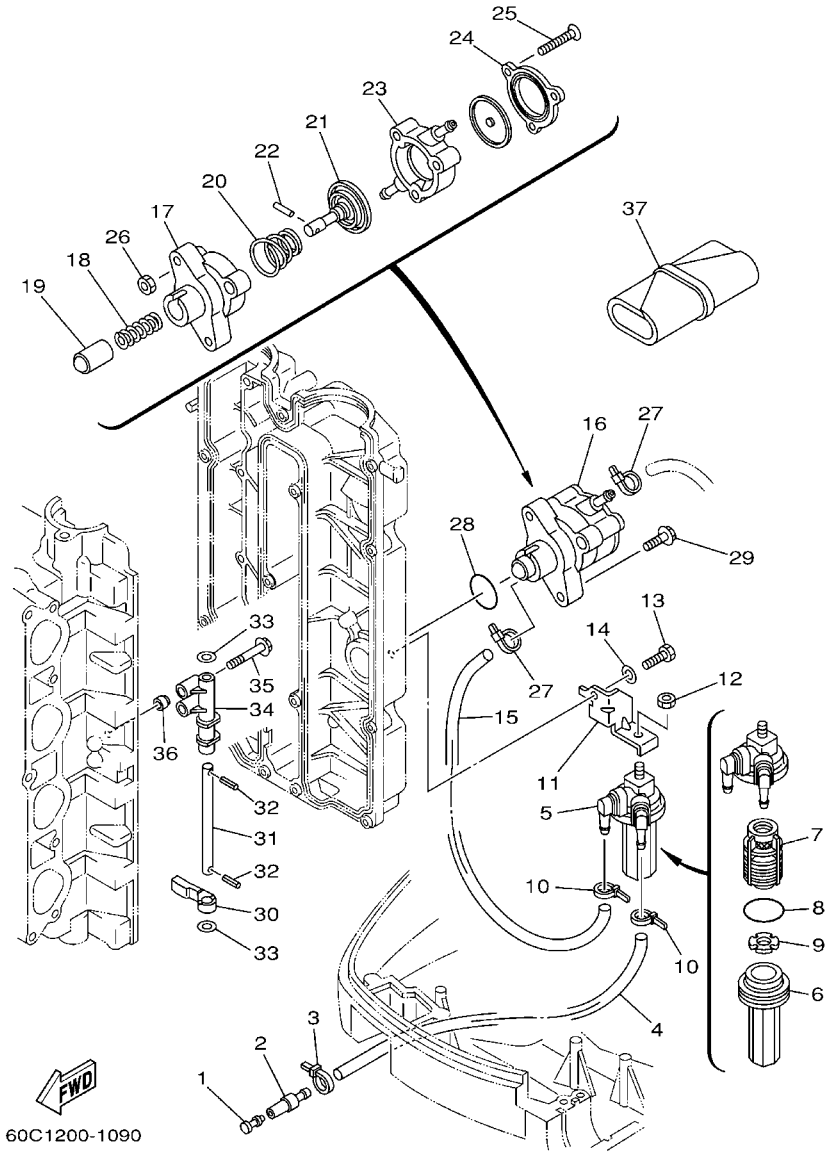

FIG. 9 FUEL

REF. NO.	PART NO.	DESCRIPTION	60D4					REMARKS
28	93210–30682	O-RING	1					
29	90119–06M83	BOLT, WITH WASHER	2					
30	67F–24575–00	LEVER, FUEL CHANGE	1					
31	68V–24495–00	SHAFT	1					
32	91609–25014	PIN, SPRING	2					
33	90201–08M12	WASHER, PLATE	2					
34	67F–24491–00	BRACKET, FUEL PUMP	1					
35	90119–07235	BOLT/WASHER-CAM CAPS	2					
36	91809–08006	SLEEVE GUIDE-DOWEL	2					
37	67F–28100–01	TOOL KIT	1					

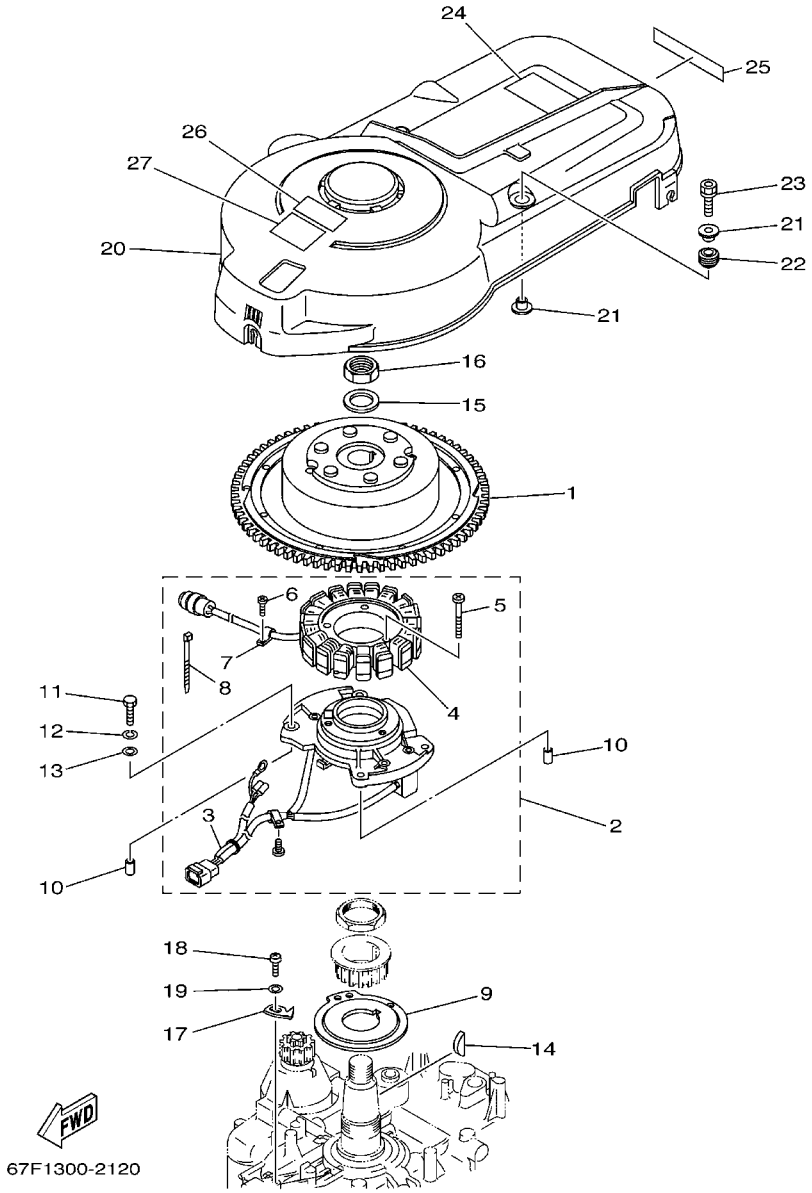

FIG. 10 GENERATOR

REF. NO.	PART NO.	DESCRIPTION	60D4					REMARKS
1	67F–85550–00	ROTOR ASSY	1					
2	67F–85560–01	BASE ASSY	1					
3	67F–85580–00	.COIL, PULSER	1					
4	67F–85510–01	.STATOR ASSY	1					
5	63D–81345–20	.SCREW, WITH WASHER (M6X30)	3					
6	97607–04110	.SCREW,WITH WASHER	1					
7	445–81328–20	.CLAMP	1					
8	66T–81328–00	.CLAMP	1					
9	67F–81673–00	ROTOR	1					
10	99530–08012	PIN, DOWEL	2					
11	97095–06030	BOLT	4					
12	92995–06100	WASHER, SPRING	4					
13	92995–06600	WASHER	4					
14	90280–05015	KEY, WOODRUFF	1					
15	90201–24014	WASHER, PLATE	1					
16	90179–24002	NUT	1					
17	67F–81332–00	PLATE, TIMING	1					
18	97885–06010	SCREW, PAN HEAD	1					
19	92995–06600	WASHER	1					
20	67F–81337–01	COVER, FLYWHEEL	1					
21	90387–06M71	COLLAR	4					
22	90480–15M31	GROMMET	2					
23	90119–06M92	BOLT, WITH WASHER	2					
24	67F–12138–60	MARK, CAUTION	1					
25	68V–13437–60	MARK, CAUTION	1					
26	6A1–83625–41	MARK 5	1					
27	6A1–83625–51	MARK 5	1					

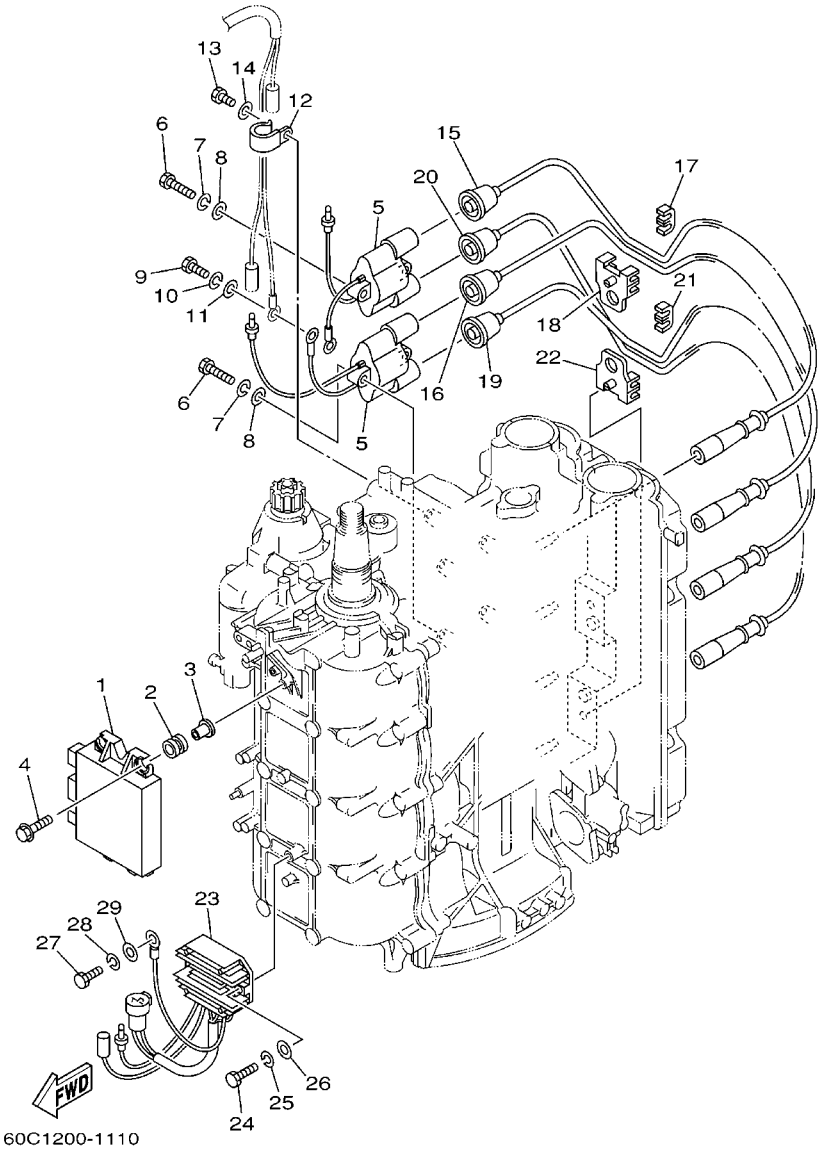

FIG. 11 ELECTRICAL 1

REF. NO.	PART NO.	DESCRIPTION	60D4					REMARKS
1	67F–85540–03	C.D.I. UNIT ASSY	1					
2	68V–82317–00	DAMPER, IGNITION COIL	4					
3	624–42542–00	PIPE	4					
4	90119–06M59	BOLT, WITH WASHER	4					
5	67F–85570–00	IGNITION COIL ASSY	2					
6	97095–06030	BOLT	4					
7	92995–06100	WASHER, SPRING	4					
8	92995–06600	WASHER	4					
9	97095–06020	BOLT	1					
10	92995–06100	WASHER, SPRING	1					
11	92995–06600	WASHER	1					
12	90465–06M86	CLAMP	1					
13	97095–06012	BOLT	1					
14	92995–06600	WASHER	1					
15	67F–82341–00	CORD, HIGH TENSION 1	1					#1
16	67F–82342–00	CORD, HIGH TENSION 2	1					#2
17	67F–82361–00	CLAMP, CORD	1					
18	67F–82362–00	CLAMP, CORD 2	1					
19	67F–82343–00	CORD, HIGH TENSION 3	1					#3
20	67F–82344–00	CORD, HIGH TENSION 4	1					#4
21	67F–82361–00	CLAMP, CORD	1					
22	67F–82362–00	CLAMP, CORD 2	1					
23	67F–81960–11	RECTIFIER & REGULATOR ASSY	1					
24	97095–06025	BOLT	2					
25	92995–06100	WASHER, SPRING	2					
26	92995–06600	WASHER	2					
27	97095–06020	BOLT	1					

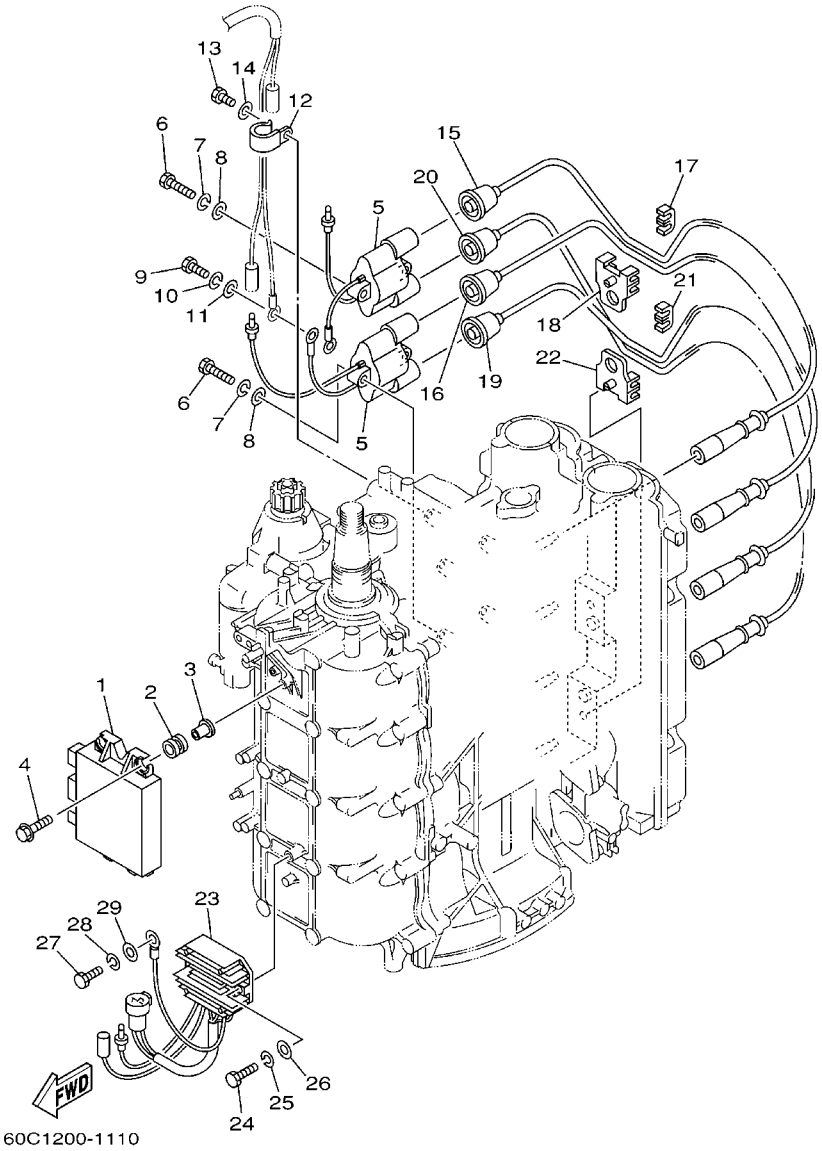

FIG. 11 ELECTRICAL 1

REF. NO.	PART NO.	DESCRIPTION	60D4					REMARKS
28	92995–06100	WASHER, SPRING	1					
29	92995–06600	WASHER	1					

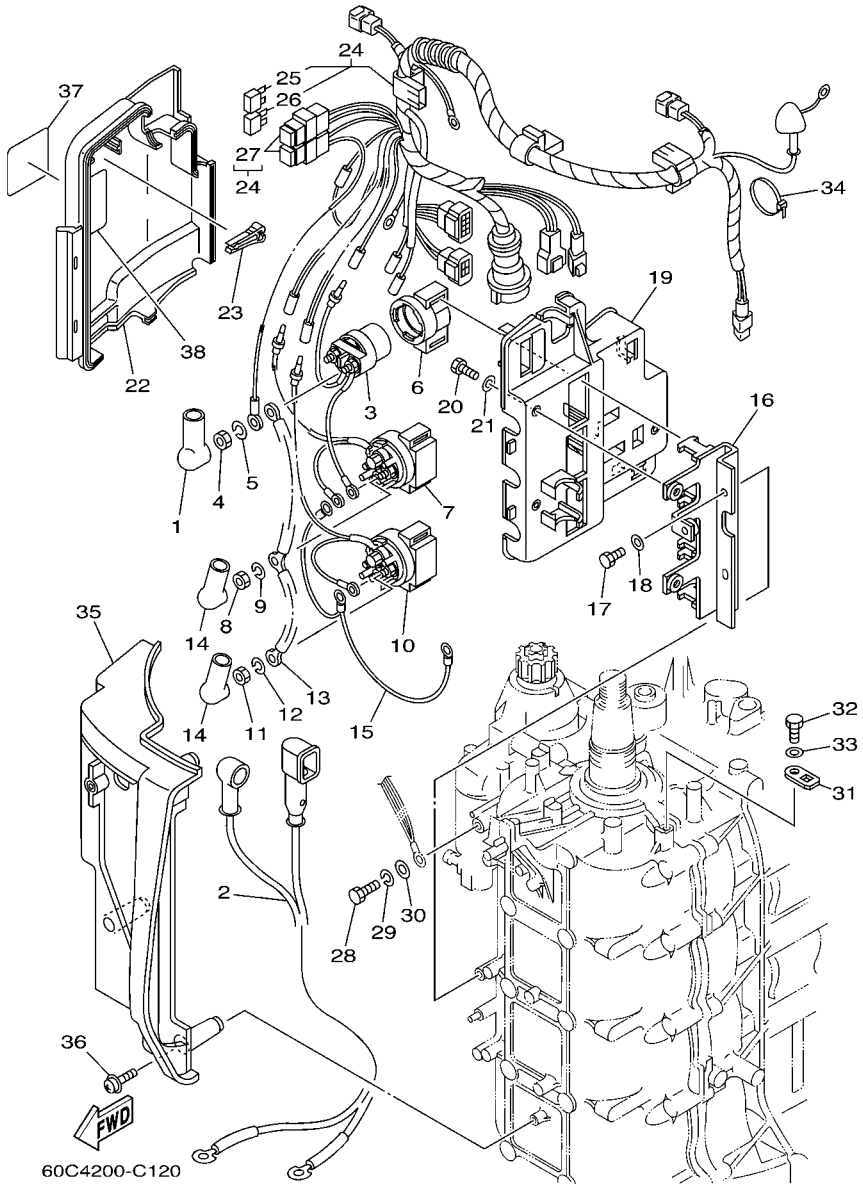

FIG. 12 ELECTRICAL 2

REF. NO.	PART NO.	DESCRIPTION	60D4					REMARKS
1	682–82119–01	COVER, LEAD WIRE	2					
2	67F–82105–00	WIRE HARNESS	1					
3	6G1–8194A–10	RELAY	1					
4	90170–06M30	NUT	2					
5	90204–06M00	WASHER, SPRING	2					
6	6G1–81952–00	HOLDER, RELAY	1					
7	6E5–8195B–01	RELAY ASSY	1					
8	90170–06M30	NUT	3					
9	90204–06M00	WASHER, SPRING	3					
10	6E5–8195C–01	RELAY ASSY	1					
11	90170–06M30	NUT	3					
12	90204–06M00	WASHER, SPRING	3					
13	66T–87149–00	CONNECTOR	1					
14	6G5–82119–00	COVER, LEAD WIRE	2					
15	67F–82116–00	WIRE, MINUS LEAD	1					
16	67F–81953–00	STAY, RELAY	1					
17	97095–06016	BOLT	2					
18	92995–06600	WASHER	2					
19	67F–81948–00	BRACKET	1					
20	97095–06016	BOLT	3					
21	92995–06600	WASHER	3					
22	67F–81942–00	COVER	1					
23	67F–2812A–00	PULLER, FUSE	1					
24	67F–82590–03	WIRE HARNESS ASSY	1					
25	67F–82151–00	.FUSE (20A)	2					
26	67F–82151–10	.FUSE (30A)	2					
27	67F–8215B–00	.CAP (BLACK)	2					

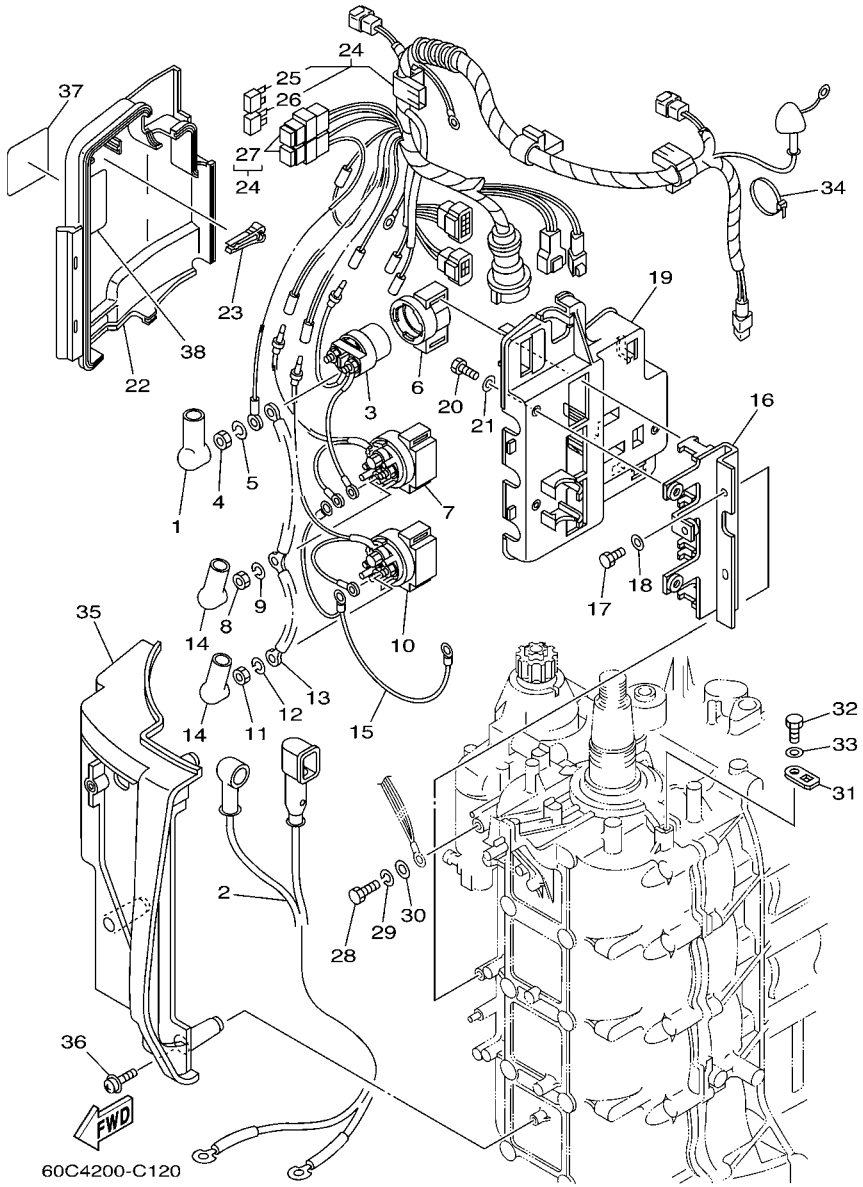

FIG. 12 ELECTRICAL 2

REF. NO.	PART NO.	DESCRIPTION	60D4					REMARKS
28	97095–06020	BOLT	1					
29	92995–06100	WASHER, SPRING	1					
30	92995–06600	WASHER	1					
31	67F–82588–00	PLATE	3					
32	97095–06012	BOLT	3					
33	92995–06600	WASHER	3					
34	90465–13M11	CLAMP	1					
35	60C–81916–00	COVER, TERMINAL	1					
36	90159–06M29	SCREW, WITH WASHER	3					
37	67F–83626–00	MARK 6	1					
38	67F–81919–00	GRAPHIC, REGULATOR	1					

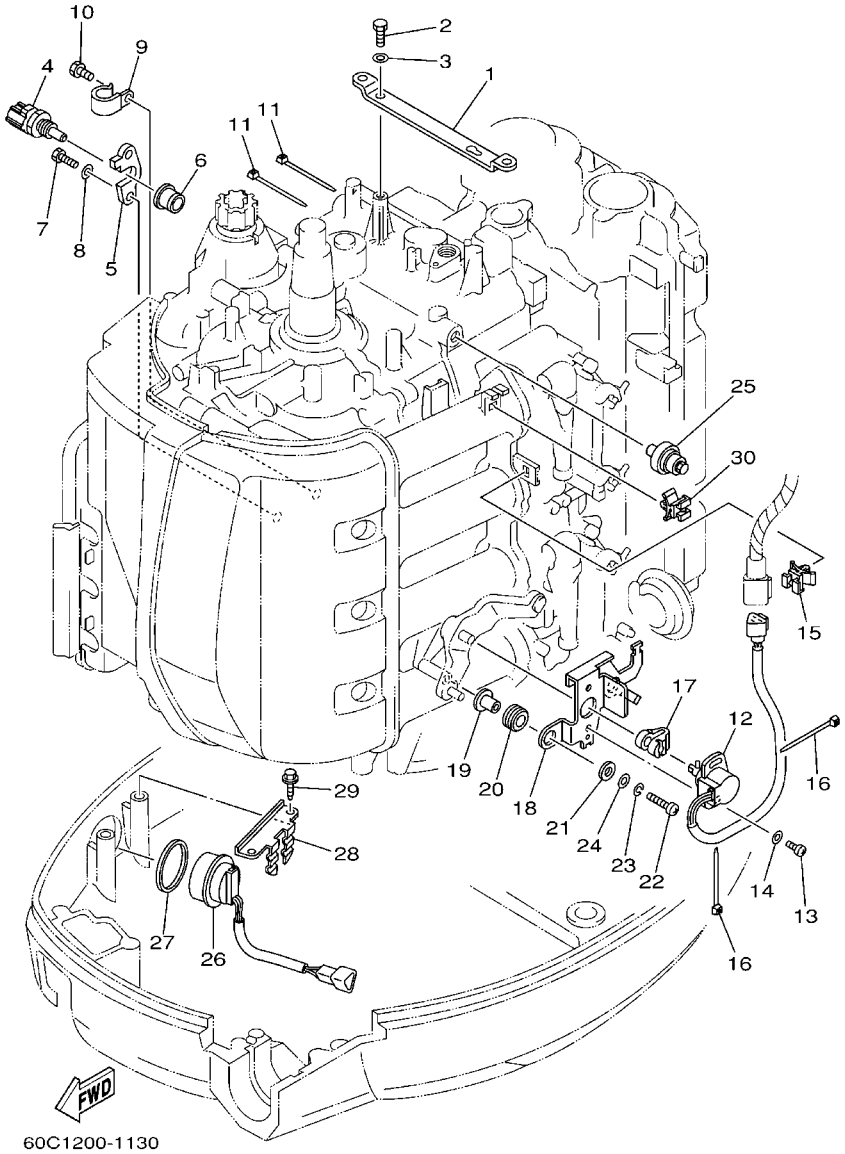

FIG. 13 ELECTRICAL 3

REF. NO.	PART NO.	DESCRIPTION	60D4					REMARKS
1	67F–8132G–01	PLATE	1					
2	97095–06016	BOLT	2					
3	92995–06600	WASHER	2					
4	67F–85790–00	THERMOSENSOR ASSY	1					
5	67F–85757–00	RETAINER	1					
6	68V–85753–00	GASKET, SENDER UNIT	1					
7	97095–06016	BOLT	2					
8	92995–06600	WASHER	2					
9	90465–06M86	CLAMP	1					
10	97095–06010	BOLT	1					
11	90465–11M10	CLAMP	2					
12	61A–85885–00	THROTTLE SENSOR ASSY	1					
13	97885–05010	SCREW, PAN HEAD	2					
14	92995–05600	WASHER	2					
15	90464–09M47	CLAMP	1					
16	90465–11M10	CLAMP	2					
17	6K7–14573–00	LEVER	1					
18	67F–83635–00	BRACKET	1					
19	90387–05M00	COLLAR	2					
20	90480–10M23	GROMMET	2					
21	90201–05M03	WASHER, PLATE	2					
22	97885–05025	SCREW, PAN HEAD	2					
23	92995–05100	WASHER	2					
24	92995–05600	WASHER	2					
25	68V–82504–00	OIL PRESSURE SWITCH ASSY	1					
26	63D–82563–10	TRIM & TILT SWITCH ASSY	1					
27	6E5–82587–00	GASKET	1					

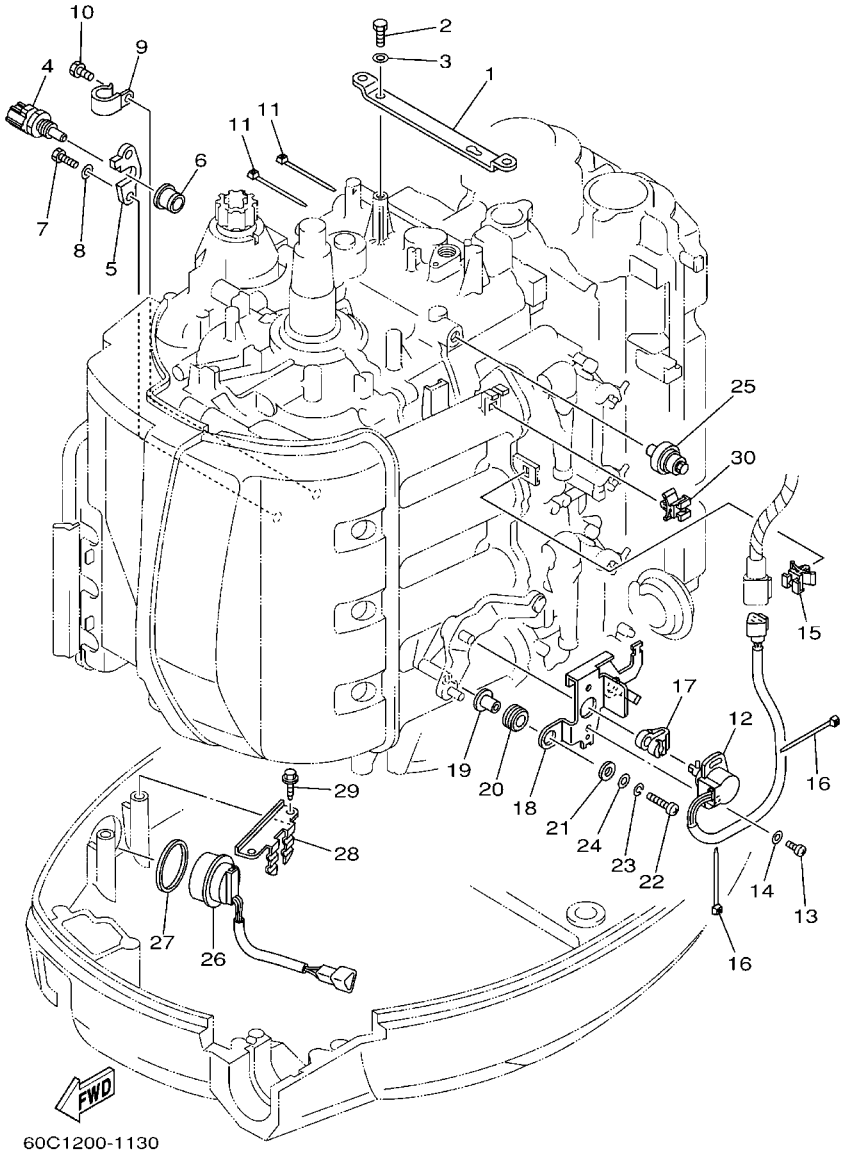

FIG. 13 ELECTRICAL 3

REF. NO.	PART NO.	DESCRIPTION	60D4					REMARKS
28	67F–83614–00	BRACKET	1					
29	90109–06M86	BOLT	2					
30	90464–09M47	CLAMP	1					

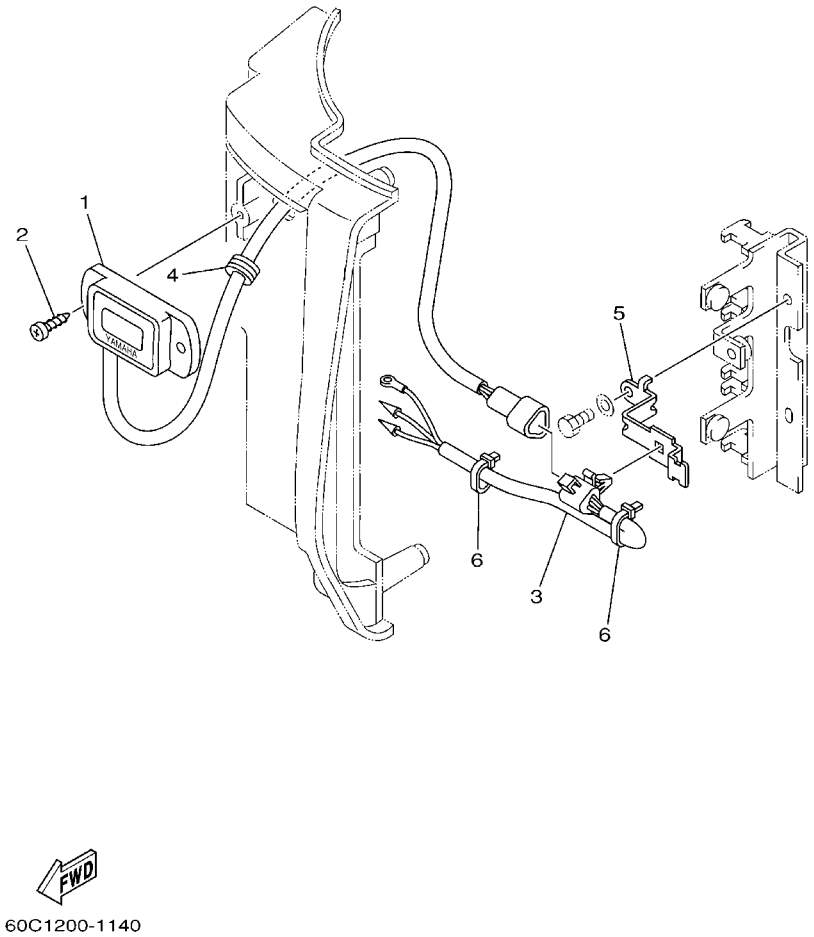

FIG. 14 ELECTRICAL 4

REF. NO.	PART NO.	DESCRIPTION	60D4					REMARKS
1	6Y5–83504–20	HOUR METER ASSY	1					
2	90167–05009	SCREW, TAPPING	2					
3	60C–82586–00	EXTENSION, WIRE HARNESS	1					
4	90480–01008	GROMMET	1					
5	60C–8431R–00	STAY, SETTING	1					
6	90465–11M10	CLAMP	2					

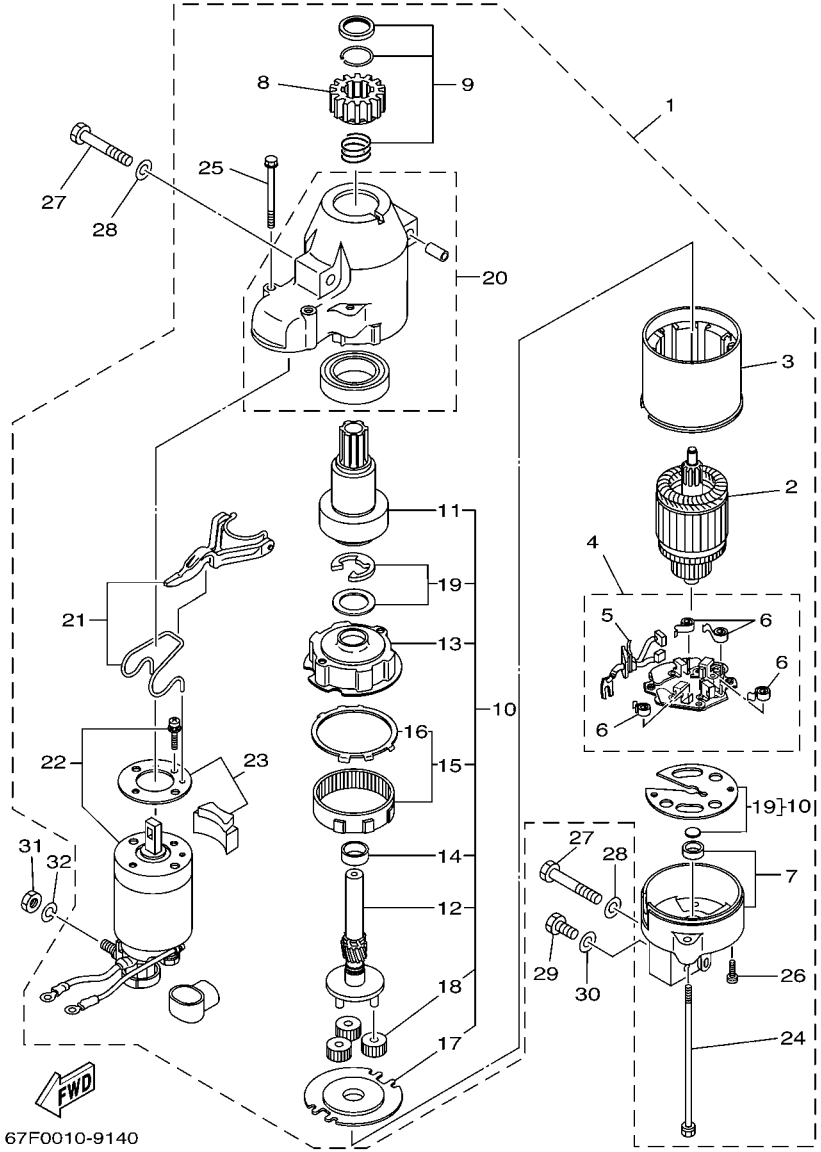

FIG. 15 STARTING MOTOR

REF. NO.	PART NO.	DESCRIPTION	60D4					REMARKS
1	67F–81800–02	STARTING MOTOR ASSY	1					
2	67F–81850–00	.ARMATURE ASSY	1					
3	67F–81810–00	.STATOR ASSY	1					
4	67F–81840–00	.BRUSH HOLDER ASSY	1					
5	67F–81801–00	..BRUSH SET	1					
6	67F–81813–00	..SPRING, BRUSH	4					
7	67F–81820–00	.REAR BRACKET ASSY	1					
8	67F–81808–00	.PINION ASSY	1					
9	67F–81857–00	.PINION STOPPER SET	1					
10	67F–81807–00	.GEAR ASSY, STARTING MOTOR	1					
11	67F–81832–00	..CLUTCH, OVER RUN	1					
12	67F–81836–00	..SHAFT, PINION	1					
13	67F–81821–00	..BRACKET, CENTER 1	1					
14	67F–81841–00	..BEARING	1					
15	67F–81891–00	..GEAR, RING	1					
16	67F–8183R–00	...GASKET	1					
17	67F–81830–00	..BRACKET, CENTER 2	1					
18	67F–8183T–00	..GEAR, IDLER	3					
19	67F–81809–00	..WASHER KIT	1					
20	67F–81842–00	.COVER	1					
21	67F–81839–00	.LEVER ASSY	1					
22	67F–81941–01	.STARTER RELAY ASSY	1					
23	67F–81869–00	.COVER, DUST	1					
24	6K7–81826–10	.BOLT	2					
25	67F–81828–00	.BOLT 2	2					
26	67F–81846–00	.SCREW	2					
27	97013–08045	BOLT	3					

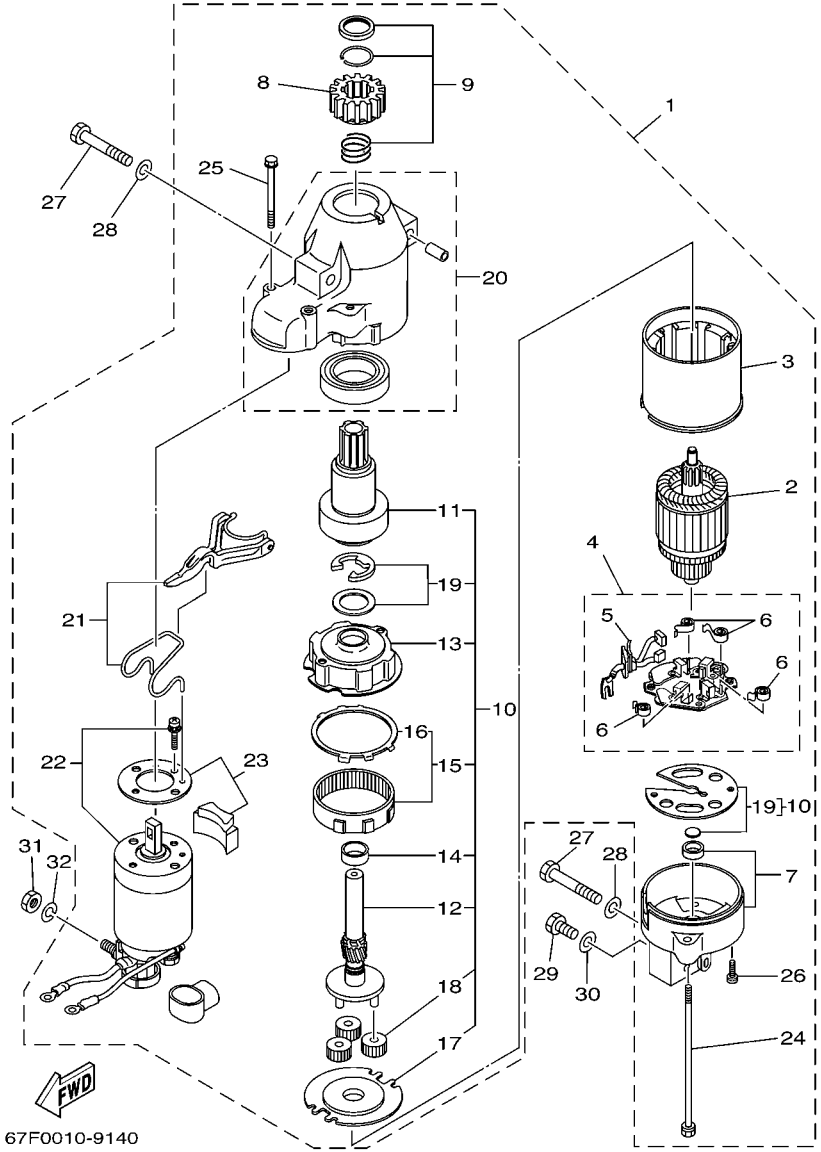

FIG. 15 STARTING MOTOR

REF. NO.	PART NO.	DESCRIPTION	60D4					REMARKS
28	92903–08600	WASHER, PLATE	3					
29	97013–08016	BOLT	1					
30	92903–08600	WASHER, PLATE	1					
31	95333–08600	NUT	1					
32	92903–08100	WASHER, SPRING	1					

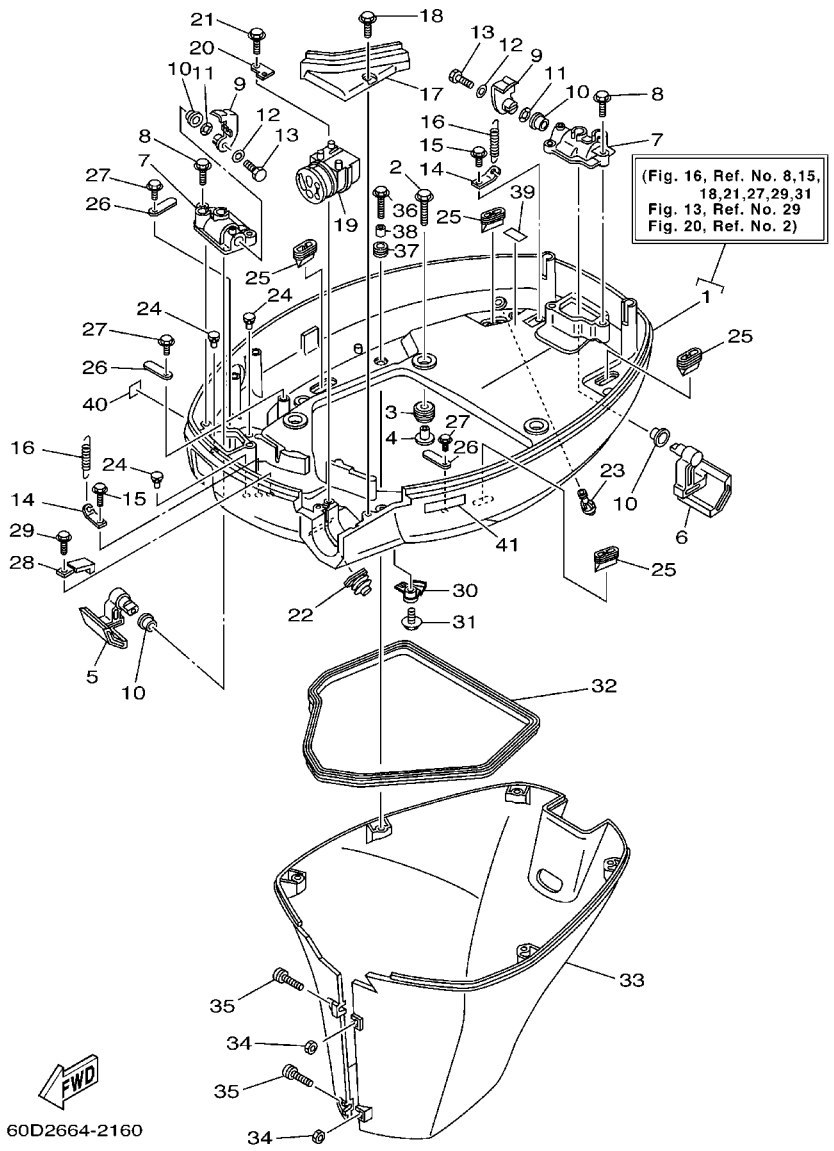

FIG. 16 BOTTOM COWLING

REF. NO.	PART NO.	DESCRIPTION	60D4					REMARKS
1	67F–42710–01–4D	BOTTOM COWLING ASSY	1					
2	90119–08M22	BOLT, WITH WASHER	4					
3	90480–22M15	GROMMET	4					
4	90387–08M37	COLLAR	4					
5	67F–42815–00–4D	LEVER, CLAMP	1					
6	67F–42816–00–4D	LEVER, CLAMP	1					
7	67F–42828–00–5B	PLATE, CLAMP	2					
8	90109–06M82	BOLT	4					
9	67F–42818–00	LEVER, CLAMP	2					
10	90386–15M73	BUSH	4					
11	90206–15M18	WASHER, WAVE	2					
12	90201–06068	WASHER, PLATE	2					
13	97095–06016	BOLT	2					
14	64D–43144–00	HOOK, SPRING	2					
15	90109–06M86	BOLT	2					
16	90506–16M34	SPRING, TENSION	2					
17	67F–42738–00–5B	PLATE, FITTING	1					
18	90109–06M96	BOLT	2					
19	68V–42725–10	GROMMET	1					
20	67F–42756–00	STAY, CLAMP	1					
21	90109–06M86	BOLT	1					
22	688–42726–10	GROMMET	1					
23	6H3–44391–01	NIPPLE, HOSE	1					
24	6H4–42748–00	GROMMET	3					
25	67F–42717–00	RUBBER, SEAL 2	4					
26	6E5–82588–00	PLATE	3					
27	90109–06M81	BOLT	3					

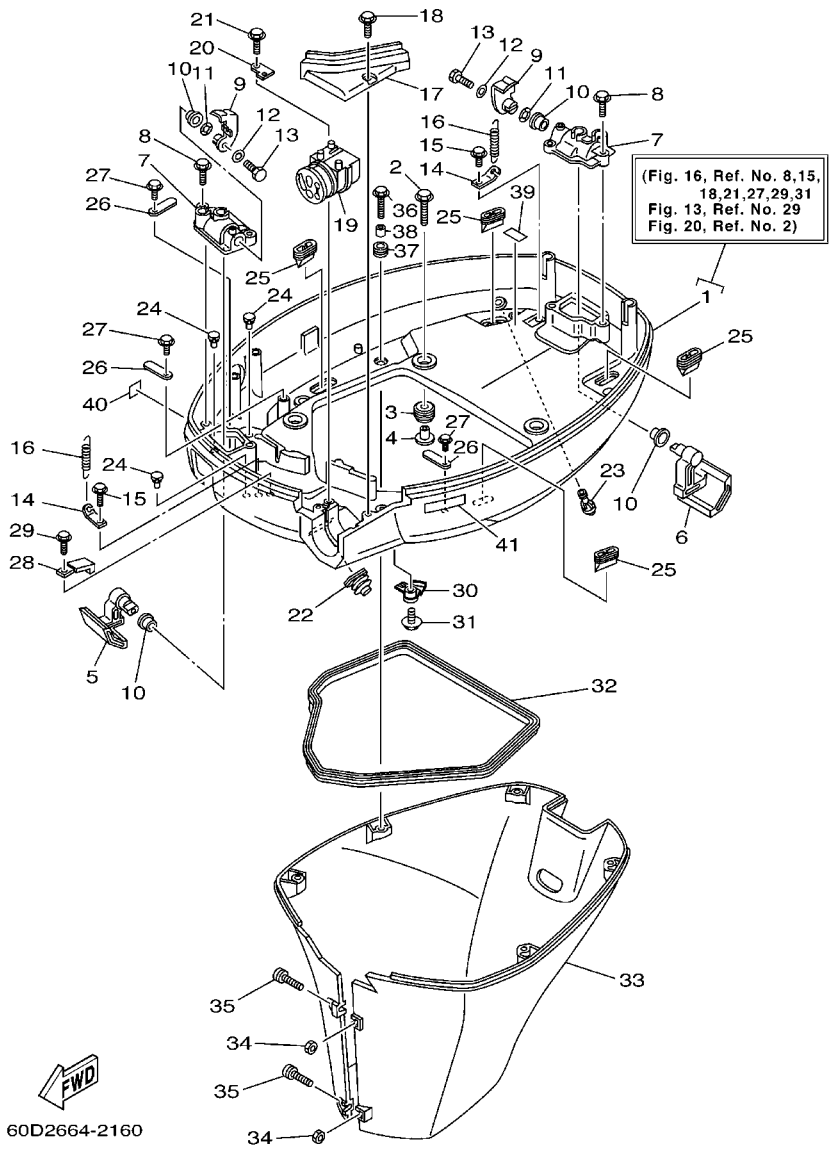

FIG. 16 BOTTOM COWLING

REF. NO.	PART NO.	DESCRIPTION	60D4					REMARKS
28	90465–08M23	CLAMP	1					
29	90109–06M86	BOLT	1					
30	67F–24367–00	CLAMP, FUEL PIPE 2	1					
31	90109–06M82	BOLT	1					
32	61A–42716–00	RUBBER, SEAL 1	1					
33	67F–42741–00–4D	APRON	1					
34	95380–06600	NUT, HEXAGON	2					
35	90159–06M28	SCREW, WITH WASHER	2					
36	90109–06M80	BOLT	5					
37	90480–13M24	GROMMET	5					
38	90387–06M43	COLLAR	5					
39	67F–82377–00	LABEL	1					
40	6A1–28176–00	LABEL, CAUTION	1					
41	6E3–8257H–00	PLATE, MARK	1					

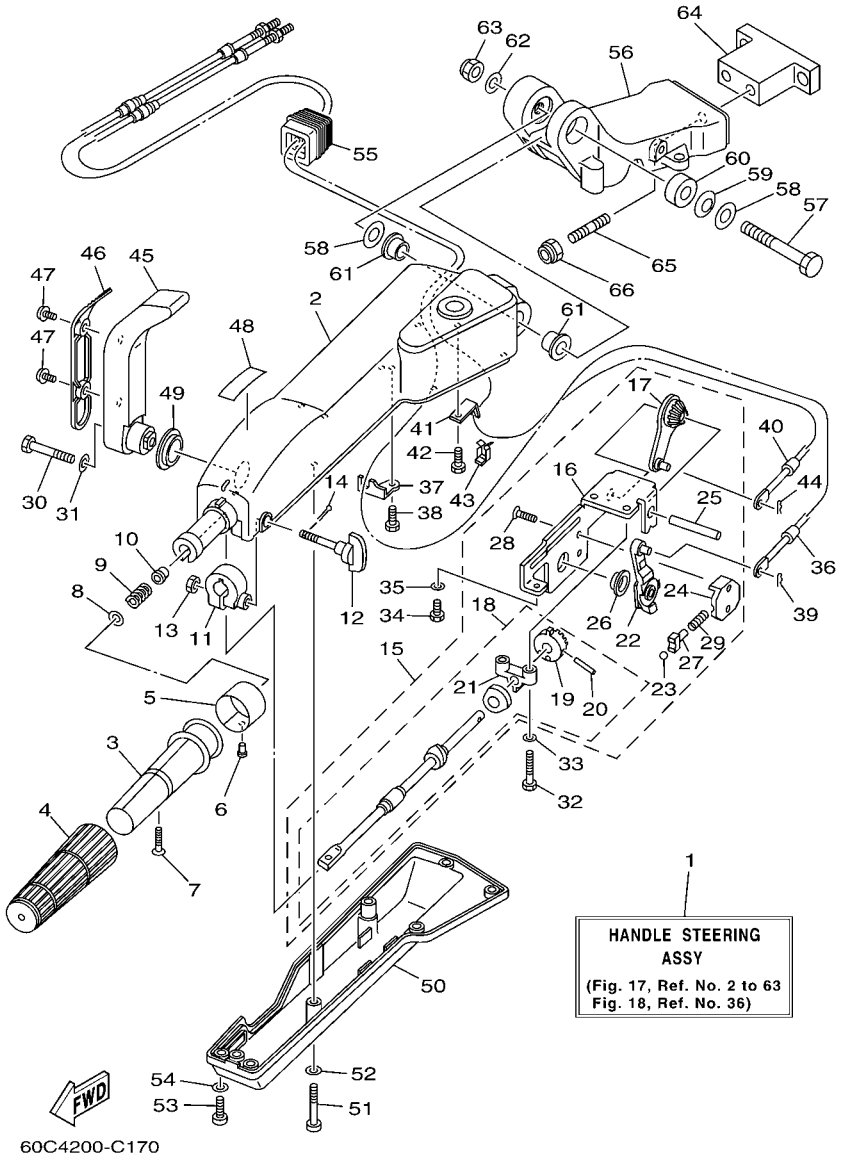

FIG. 17 STEERING 1

REF. NO.	PART NO.	DESCRIPTION	60D4					REMARKS
1	67G–W0084–02–4D	HANDLE STEERING ASSY	1					AP
2	67G–42111–00–4D	HANDLE, STEERING	1					
3	664–42119–00	GRIP, STEERING HANDLE	1					
4	6G1–42177–00	RUBBER, HANDLE	1					
5	6H2–42137–00	INDICATOR, THROTTLE	1					
6	90269–02M09	RIVET	1					
7	90149–05M13	SCREW	1					
8	92903–10600	WASHER, PLATE	1					
9	90501–23215	SPRING, COMPRESSION	1					
10	90386–08032	BUSH	1					
11	63D–42126–00	FRICTION, STEERING HANDLE GRIP	1					
12	63D–48154–00	KNOB, THROTTLE	1					
13	95380–06600	NUT, HEXAGON	1					
14	91490–20010	PIN, COTTER	1					
15	67G–44100–00	SHIFT LINK ASSY	1					
16	67G–44104–00	.PLATE COMP.	1					
17	67G–48261–00	.ARM, THROTTLE	1					
18	67G–42115–00	.SHAFT, STEERING HANDLE	1					
19	650–42152–00–94	..GEAR	1					
20	91690–30025	..PIN, SPRING	1					
21	67G–42159–00	..STAY	1					
22	67G–44113–00	.CAM PLATE, HANDLE	1					
23	63D–48236–00	.ROLLER, DETENT	1					
24	63D–48119–00	.COVER	1					
25	67G–42153–00	.SHAFT, THROTTLE CONTROL	1					
26	67G–44132–00	.BUSHING	1					
27	63D–48237–00	.ADAPTOR	1					

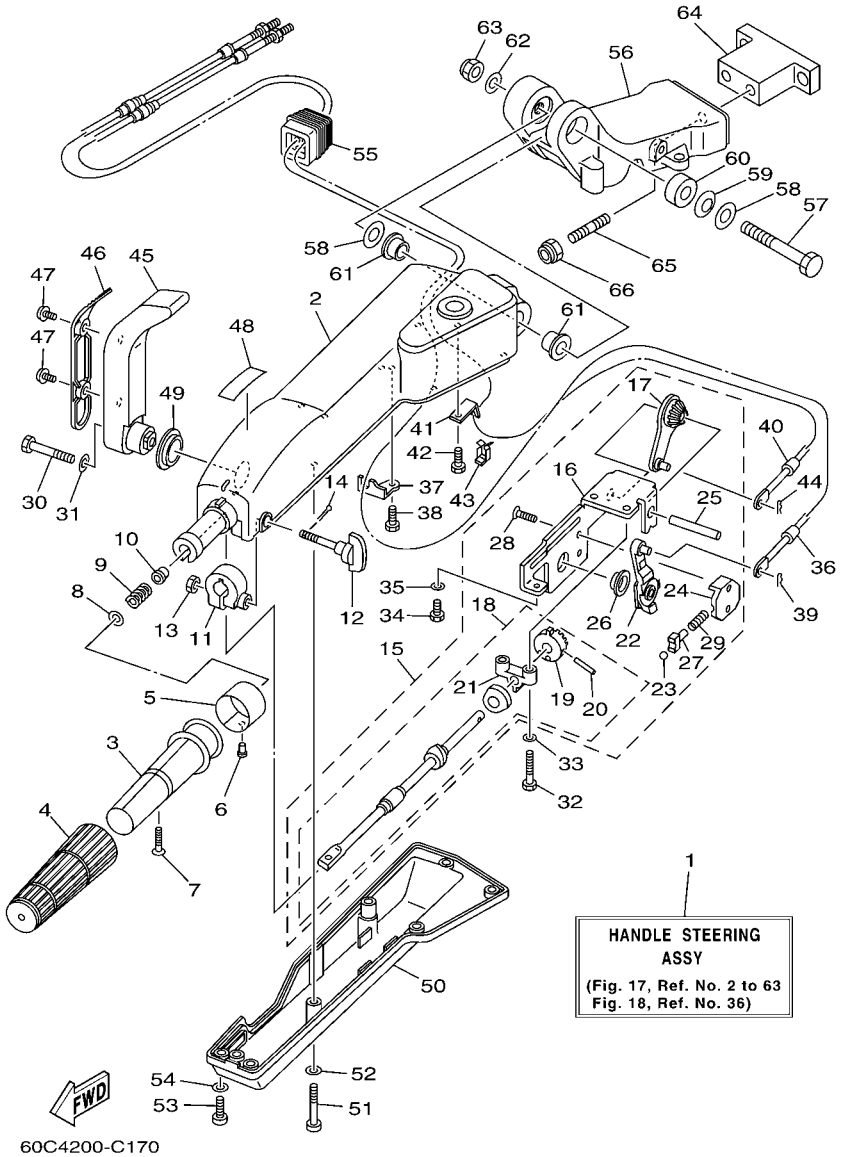

FIG. 17 STEERING 1

REF. NO.	PART NO.	DESCRIPTION	60D4					REMARKS
28	98785–05014	.SCREW, FLAT HEAD	2					
29	63D–48238–00	.SPRING, DETENT	1					
30	97095–08040	BOLT	1					
31	92995–08600	WASHER	1					
32	97095–06030	BOLT	2					
33	92995–06600	WASHER	2					
34	97095–06014	BOLT	1					
35	92995–06600	WASHER	1					
36	67G–48321–10	CABLE	1					
37	67G–48531–00	BRACKET, REMOTE CONTROL 1	1					
38	97095–06014	BOLT	1					
39	90468–10005	CLIP	1					
40	67G–26301–10	THROTTLE CABLE ASSY	1					
41	66R–48538–00	CLAMP, CABLE 1	1					
42	97095–06014	BOLT	1					
43	63D–48538–00	CLAMP, CABLE 1	1					
44	90468–10005	CLIP	1					
45	67G–44159–00–4D	HANDLE, GEAR SHIFT	1					
46	67G–44173–00	LEVER, SHIFT CONTROL	1					
47	90159–06M18	SCREW, WITH WASHER	2					
48	6G8–44191–00	INDICATOR, SHIFT	1					
49	90386–26MA3	BUSH	1					
50	67G–42131–00	COVER, HANDLE STEERING	1					
51	97885–06040	SCREW, PAN HEAD	2					
52	92995–06600	WASHER	2					
53	97885–06016	SCREW, PAN HEAD	5					
54	92995–06600	WASHER	5					

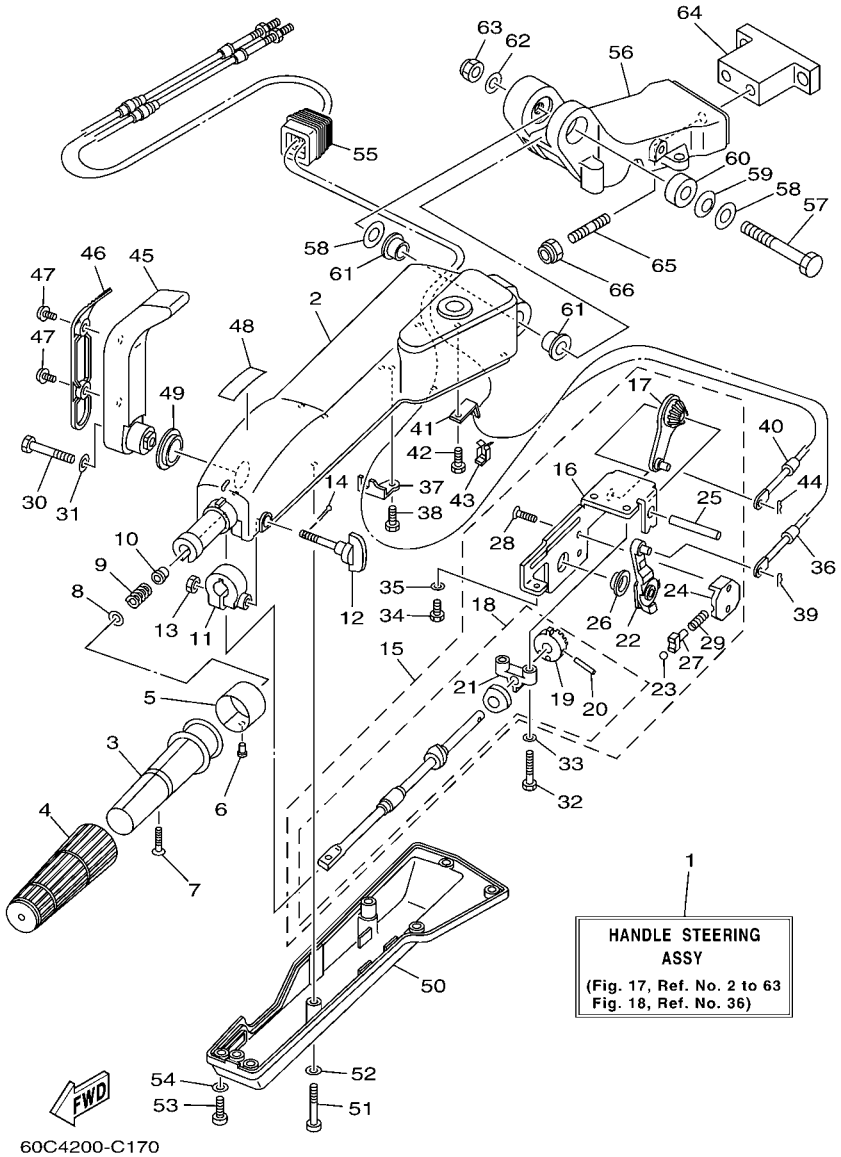

FIG. 17 STEERING 1

REF. NO.	PART NO.	DESCRIPTION	60D4					REMARKS
55	63D–42725–00	GROMMET	1					
56	63D–42121–30–4D	BRACKET	1					
57	90101–12M09	BOLT	1					
58	92990–12200	WASHER, PLAIN	2					
59	90206–12M22	WASHER, WAVE	1					
60	90387–12M02	COLLAR	1					
61	90386–12M93	BUSH	2					
62	92990–12600	WASHER, PLATE	1					
63	90185–12M12	NUT, SELF-LOCKING	1					
64	68V–42121–00–4D	BRACKET	1					AP
65	90116–10175	BOLT, STUD	2					AP
66	90185–10051	NUT, SELF-LOCKING	2					AP

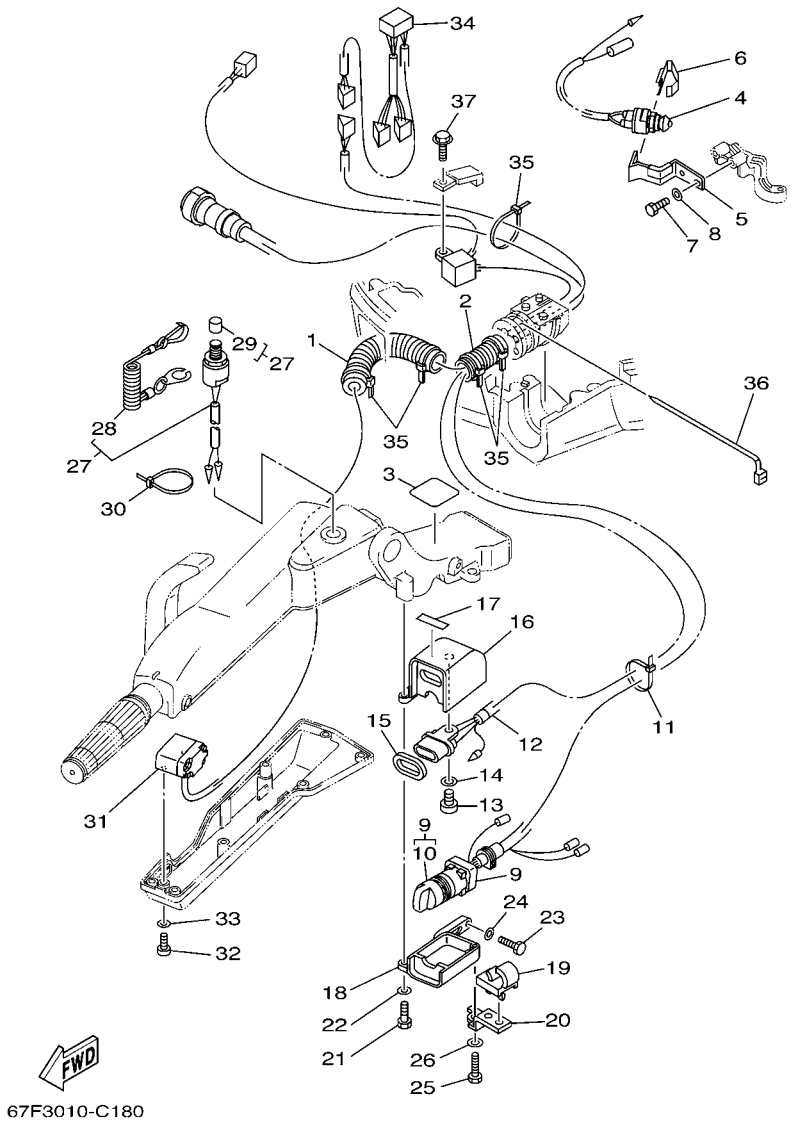

FIG. 18 STEERING 2

REF. NO.	PART NO.	DESCRIPTION	60D4					REMARKS
1	90446–24M79	HOSE (L230)	1					AP
2	6K3–83557–00	TUBE	1					AP
3	67G–42735–00	PROTECTOR	1					AP
4	688–82540–11	NEUTRAL SWITCH ASSY	1					AP
5	67G–82554–01	STAY, NEUTRAL SWITCH	1					AP
6	62Y–82555–00	DAMPER, MAIN SWITCH 1	1					AP
7	97095–06014	BOLT	2					AP
8	92995–06600	WASHER	2					AP
9	67G–82510–41	MAIN SWITCH ASSY	1					AP
10	676–82577–00	.CAP, KEY	1					
11	90465–13M11	CLAMP	1					AP
12	67G–84301–00	PILOT LIGHT ASSY 1	1					AP
13	97880–06012	SCREW, PAN HEAD	1					AP
14	92990–06600	WASHER, PLATE	1					AP
15	6H4–83589–00	GASKET	1					AP
16	67G–82568–00–4D	COVER, MAIN SWITCH	1					AP
17	67G–85415–00	MARK, SIGNAL LAMP	1					AP
18	63D–8252F–01–4D	COVER, MAIN SWITCH 2	1					AP
19	63D–24367–00	CLAMP, FUEL PIPE 2	1					AP
20	63D–24364–00	STAY	1					AP
21	97095–06025	BOLT	1					AP
22	92995–06600	WASHER	1					AP
23	97095–06020	BOLT	1					AP
24	92995–06600	WASHER	1					AP
25	97095–06030	BOLT	1					AP
26	92995–06600	WASHER	1					AP
27	69W–82575–00	ENGINE STOP SWITCH ASSY	1					AP

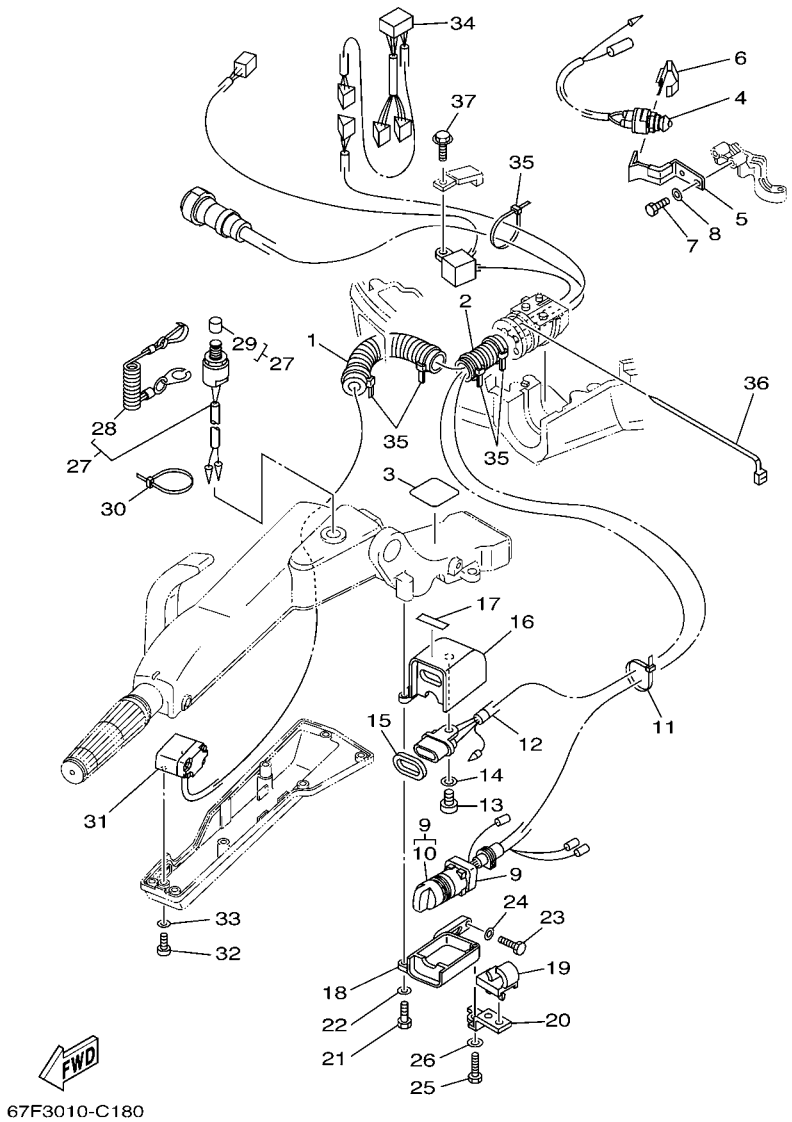

FIG. 18 STEERING 2

REF. NO.	PART NO.	DESCRIPTION	60D4					REMARKS
28	682–82556–00	.STOPPER	1					
29	689–8257Y–00	.CAP	1					
30	90465–13M11	CLAMP	1					AP
31	67G–82563–00	TRIM & TILT SWITCH ASSY	1					AP
32	97885–06016	SCREW, PAN HEAD	2					AP
33	92995–06600	WASHER	2					AP
34	63D–83728–00	CONNECTOR ASSY	1					AP
35	90465–13M24	CLAMP	5					AP
36	90465–13M30	CLAMP	1					AP
37	90109–06M81	BOLT	1					AP

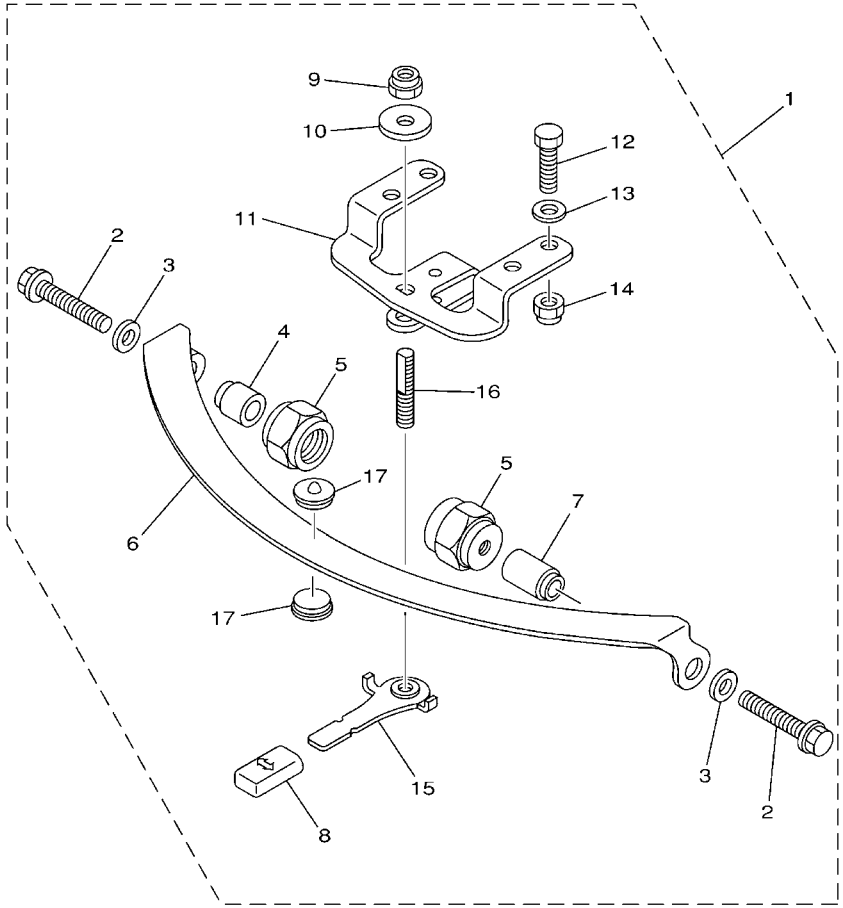

67F1100-2200

FIG. 19 STEERING FRICTION

REF. NO.	PART NO.	DESCRIPTION	60D4					REMARKS
1	67G–42508–00	STEERING FRICTION ASSY	1					AP
2	90119–08M74	.BOLT, WITH WASHER	2					
3	90201–08M01	.WASHER, PLATE	2					
4	67G–42541–00	.DAMPER	1					
5	67G–42546–00	.NUT	2					
6	63D–42527–00	.PLATE, FRICTION	1					
7	67G–42541–10	.DAMPER	1					
8	682–43318–01	.COVER	1					
9	90185–10M14	.NUT, SELF-LOCKING	1					
10	90201–10M76	.WASHER, PLATE	1					
11	67G–42526–00	.PLATE, FRICTION	1					
12	97095–08025	.BOLT	2					
13	92995–08600	.WASHER	2					
14	90185–08057	.NUT, SELF-LOCKING	2					
15	67G–42561–00	.KNOB, STEERING LOCK	1					
16	67G–42562–00	.SHAFT, STEERING LOCK	1					
17	63D–42528–00	.PLATE, FRICTION	2					

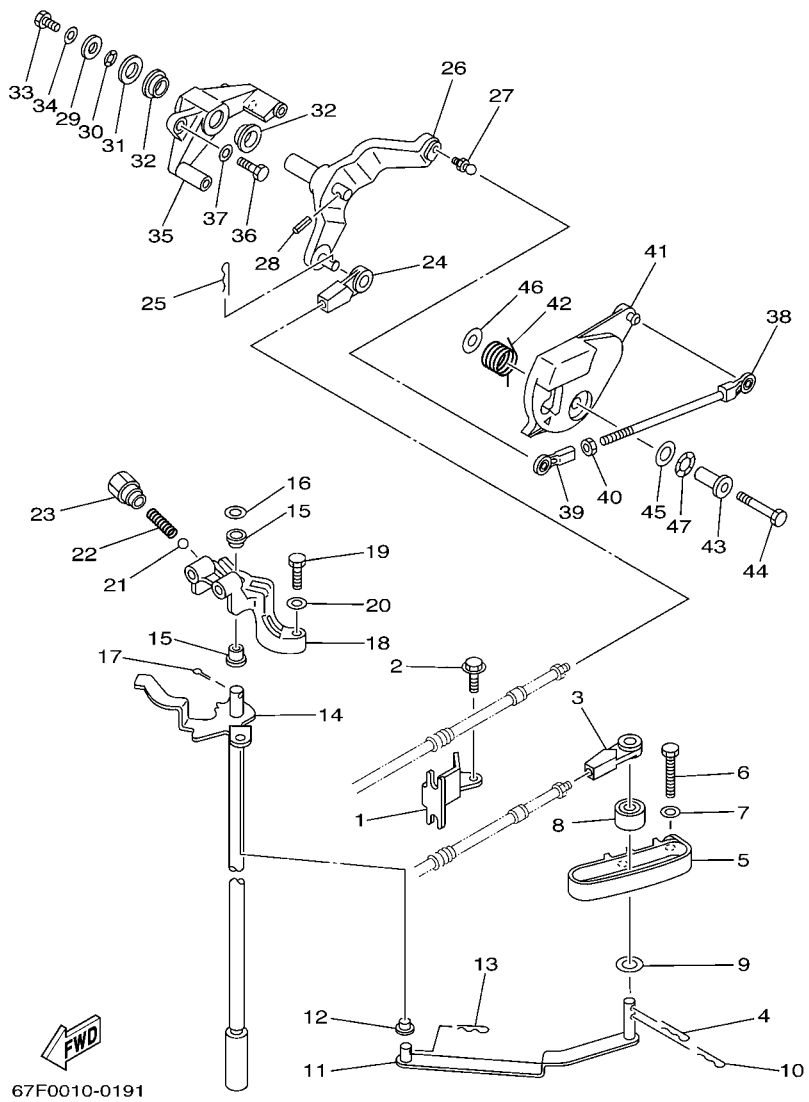

FIG. 20 CONTROL

REF. NO.	PART NO.	DESCRIPTION	60D4					REMARKS
1	67F–48538–00	CLAMP, CABLE 1	1					
2	90109–06M86	BOLT	1					
3	663–48344–00	CABLE END, REMOTE CONTROL	1					
4	90468–18008	CLIP	1					
5	67F–44117–00	BRACKET	1					
6	97095–06040	BOLT	2					
7	92995–06600	WASHER	2					
8	688–44122–00	BUSHING, SHIFT ROD LEVER	1					
9	90202–07M07	WASHER, PLATE	1					
10	90468–18008	CLIP	1					
11	67F–44121–00	LEVER, SHIFT ROD	1					
12	90386–06M12	BUSH	1					
13	90468–18008	CLIP	1					
14	67F–44120–10	HANDLE GEAR SHIFT ASSY	1					L
15	90386–90M90	BUSH	2					
16	90201–09M02	WASHER, PLATE	1					
17	91490–20015	PIN, COTTER	1					
18	67F–44118–00	BRACKET	1					
19	97075–06025	BOLT	2					
20	92995–06600	WASHER	2					
21	93501–04M02	BALL	1					
22	90501–12082	SPRING, COMPRESSION	1					
23	648–42715–00	BUSHING	1					
24	663–48344–00	CABLE END, REMOTE CONTROL	1					
25	90468–18008	CLIP	1					
26	67F–42154–00–94	LEVER, THROTTLE CONTROL	1					
27	663–85518–00	JOINT, BALL	1					

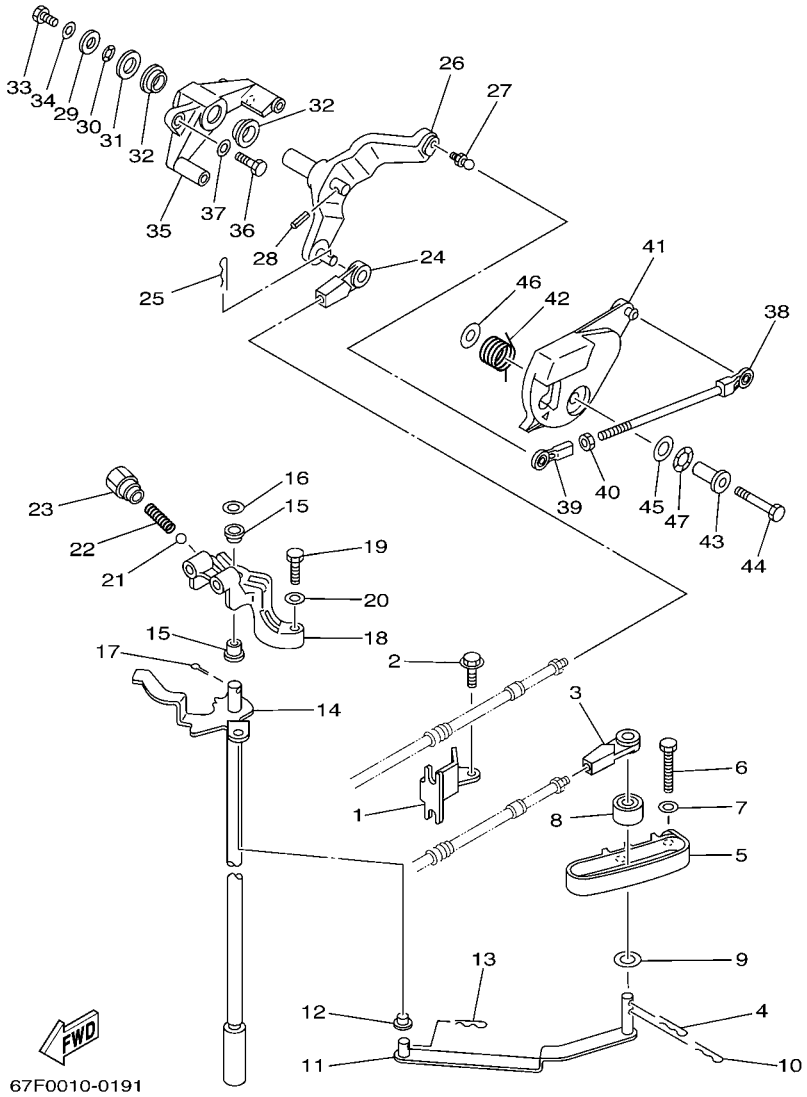

FIG. 20 CONTROL

REF. NO.	PART NO.	DESCRIPTION	60D4					REMARKS
28	91690–30018	PIN, SPRING	1					
29	90201–06068	WASHER, PLATE	1					
30	90206–12M00	WASHER, WAVE	1					
31	92990–12600	WASHER, PLATE	1					
32	90386–12069	BUSH	2					
33	97095–06012	BOLT	1					
34	92995–06600	WASHER	1					
35	67F–41661–00–94	BRACKET	1					
36	97095–06025	BOLT	2					
37	92995–06600	WASHER	2					
38	67F–41237–00	JOINT, LINK	1					
39	682–41237–00	JOINT, LINK	1					
40	95380–05600	NUT	1					
41	67F–41213–01	CAM, ACCEL.	1					
42	67F–44135–00	SPRING	1					
43	90387–06M82	COLLAR	1					
44	97095–06035	BOLT	1					
45	90201–10M02	WASHER, PLATE	1					
46	90201–06M31	WASHER, PLATE	1					
47	90206–10M04	WASHER, WAVE	1					

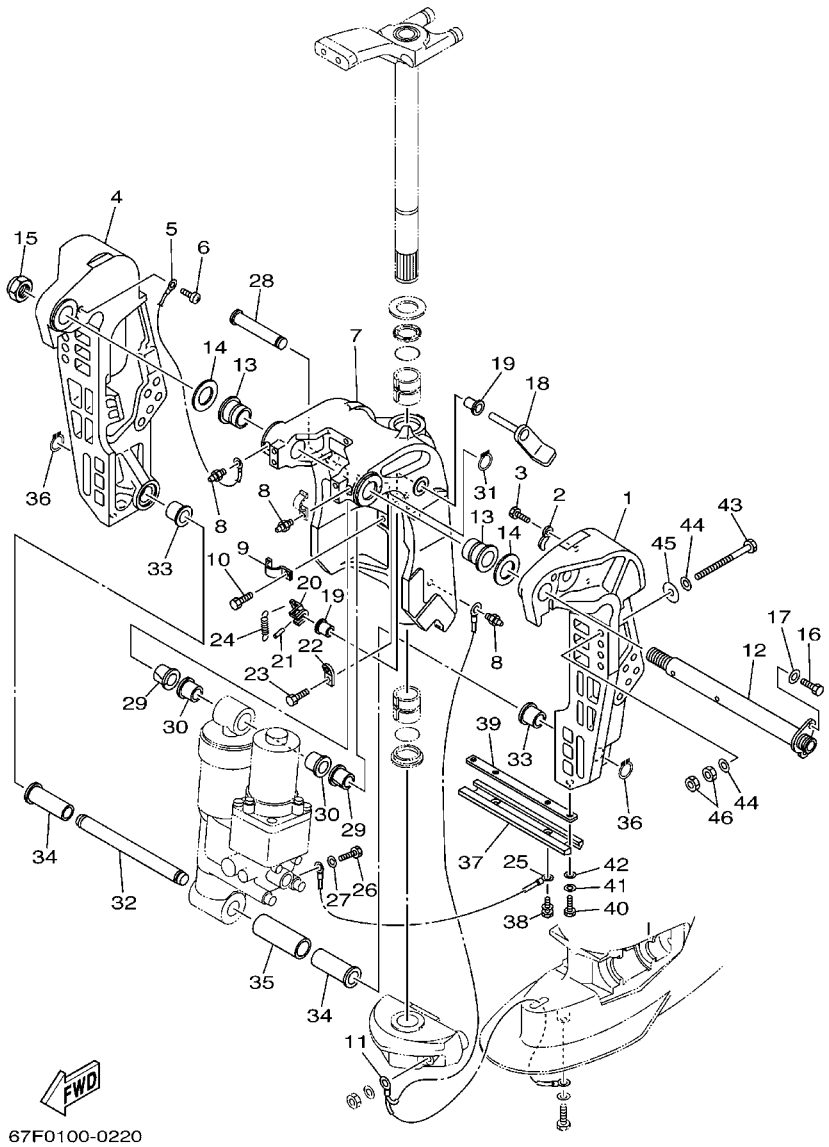

FIG. 21 BRACKET 1

REF. NO.	PART NO.	DESCRIPTION	60D4					REMARKS
1	67F–43111–00–4D	BRACKET, CLAMP	1					
2	90465–10M77	CLAMP	2					
3	97095–06010	BOLT	2					
4	67F–43112–00–4D	BRACKET, CLAMP	1					
5	6E5–82148–00	WIRE, LEAD 4	1					
6	97880–06012	SCREW, PAN HEAD	1					
7	67F–43311–10–4D	BRACKET, SWIVEL 1	1					
8	93700–06M03	NIPPLE, GREASE	3					
9	90465–08M63	CLAMP	1					
10	97095–06010	BOLT	1					
11	67F–82127–00	WIRE, LEAD 2	1					
12	64E–43131–01	BOLT, CLAMP BRACKET	1					
13	90386–25M31	BUSH	2					
14	90201–26M59	WASHER, PLATE	2					
15	90185–22M11	NUT, SELF-LOCKING	1					
16	97095–08020	BOLT	1					
17	92995–08100	WASHER	1					
18	67F–43181–00	LEVER, TILT STOP	1					
19	90386–10M16	BUSH	2					
20	67F–43631–00	LEVER, TILT	1					
21	91690–30020	PIN, SPRING	1					
22	66T–43144–00	HOOK, SPRING	1					
23	97095–06010	BOLT	1					
24	90506–14M24	SPRING, TENSION	1					
25	67F–82148–00	WIRE, LEAD 4	1					
26	97095–06010	BOLT	1					
27	92995–06600	WASHER	1					

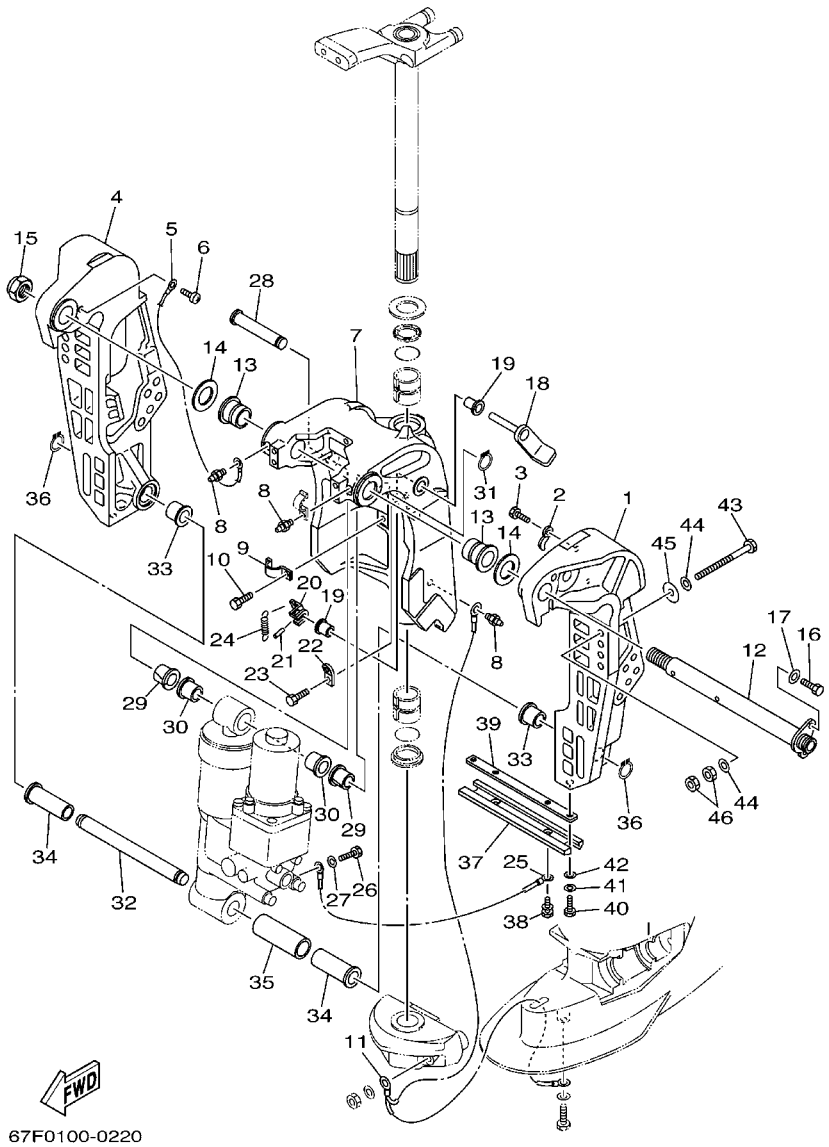

FIG. 21 BRACKET 1

REF. NO.	PART NO.	DESCRIPTION	60D4					REMARKS
28	67F–43126–00	PIN, UPPER SHOCK MOUNT	1					
29	90386–18M35	BUSH	2					
30	90386–18M63	BUSH	2					
31	93410–18M05	CIRCLIP	1					
32	67F–43818–00	PIN, LOWER SHOCK MOUNT	1					
33	90387–18M01	COLLAR	2					
34	90386–18MA0	BUSH	2					
35	90387–22M01	COLLAR	1					
36	93410–18M05	CIRCLIP	2					
37	6H1–45251–03	ANODE	1					
38	90119–06M81	BOLT, WITH WASHER	2					
39	6H1–44526–00	PLATE	1					
40	97095–06016	BOLT	2					
41	92995–06100	WASHER, SPRING	2					
42	92995–06600	WASHER	2					
43	90101–12M03	BOLT (L:115MM)	4					
44	90201–13M01	WASHER, PLATE	8					
45	90201–12M05	WASHER, PLATE	4					
46	95380–12600	NUT	8					

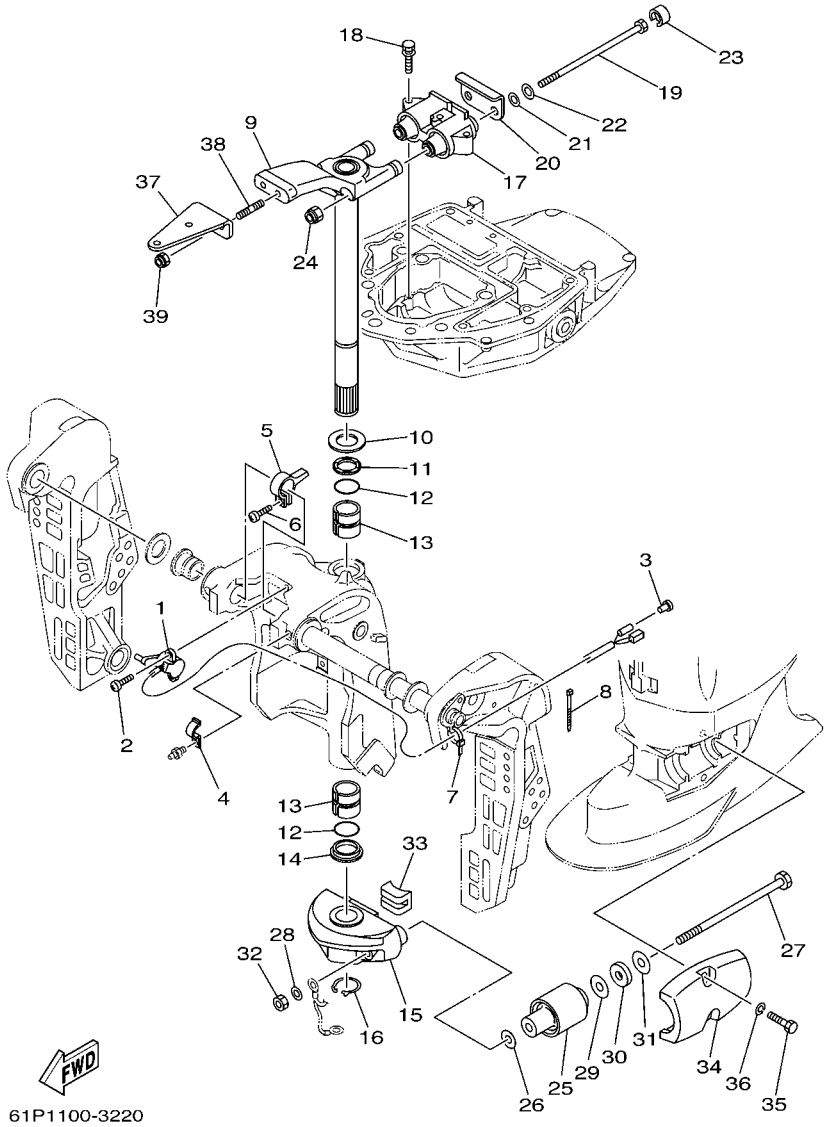

FIG. 22 BRACKET 2

REF. NO.	PART NO.	DESCRIPTION	60D4					REMARKS
1	64E–83672–02	TRIM SENDER	1					
2	97885–06016	SCREW, PAN HEAD	2					
3	703–82119–00	COVER, LEAD WIRE	1					
4	90465–08M63	CLAMP	1					
5	64E–43139–02	CAM, TRIM SENDER	1					
6	97780–60525	SCREW, TAPPING	1					
7	90465–11M10	CLAMP	1					
8	90465–11M10	CLAMP	3					
9	67F–42510–10–4D	STEERING BRACKET ASSY	1					
10	90201–30M00	WASHER, PLATE	1					
11	90386–30M78	BUSH	1					
12	93210–29M94	O-RING	2					
13	90386–30M77	BUSH	2					
14	90386–30M60	BUSH	1					
15	67F–44551–00–4D	HOUSING, LOWER MOUNT RUBBER	1					
16	93410–28M06	CIRCLIP	1					
17	67F–44514–00–94	MOUNT DAMPER, UPPER SIDE	1					
18	97575–08445	BOLT, WITH WASHER	3					
19	90109–12M37	BOLT	2					
20	67F–44526–00	PLATE	1					
21	90201–12M16	WASHER, PLATE	2					
22	90201–13M01	WASHER, PLATE	2					
23	67F–44533–00	DAMPER, UPPER MOUNT RUBBER	2					
24	95780–12300	NUT, FLANGE	2					
25	67F–44555–00–94	MOUNT DAMPER, LOWER SIDE	2					
26	90201–13M03	WASHER, PLATE	2					
27	90109–12M97	BOLT	2					

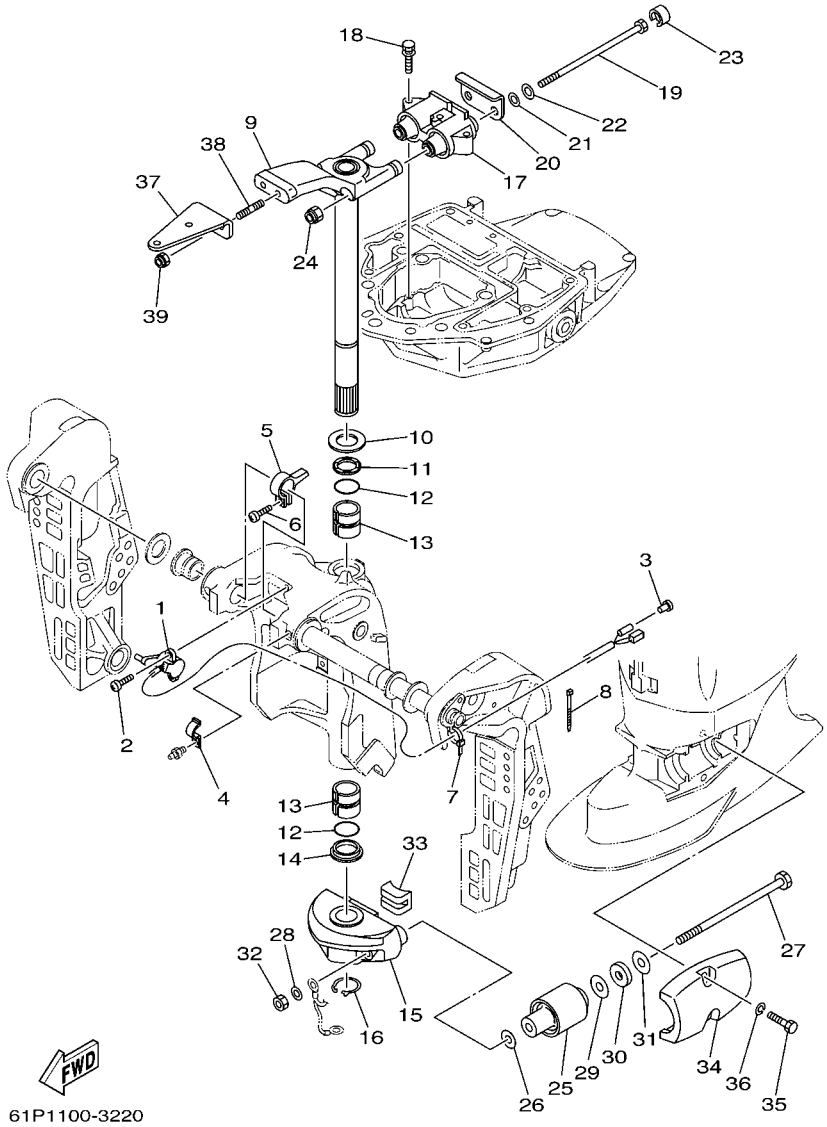

FIG. 22 BRACKET 2

REF. NO.	PART NO.	DESCRIPTION	60D4					REMARKS
28	90201–12M16	WASHER, PLATE	2					
29	90201–24M02	WASHER, PLATE	2					
30	90202–25M04	WASHER, PLATE	2					
31	90201–13M19	WASHER, PLATE	2					
32	95380–12700	NUT	2					
33	67F–44575–00	DAMPER, LOWER MOUNT RUBBER	1					
34	67F–44553–00–4D	COVER, LOWER MOUNT	2					
35	97075–10040	BOLT	4					
36	92995–10100	WASHER	4					
37	67F–48511–00–4D	HOOK, STEERING	1					
38	90116–10175	BOLT, STUD	2					
39	90185–10051	NUT, SELF-LOCKING	2					

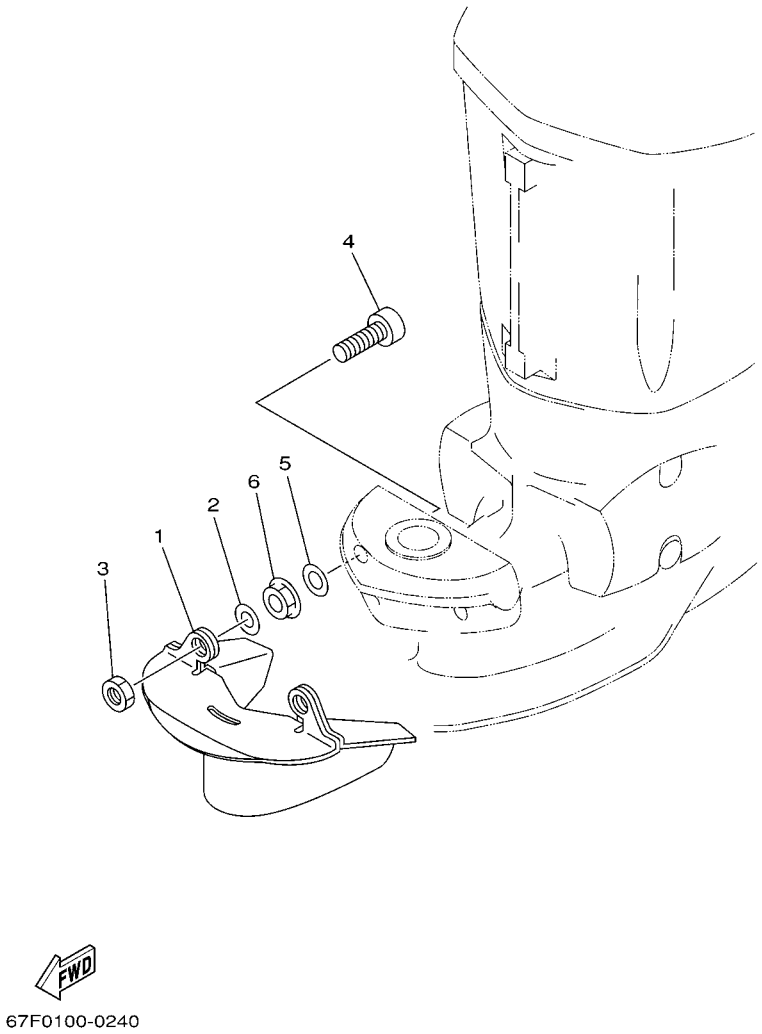

FIG. 23 OPTIONAL PARTS

REF. NO.	PART NO.	DESCRIPTION	60D4					REMARKS
1	67F–45180–00–4D	PLATE, SPLASH	1					AP
2	90201–12M01	WASHER, PLATE	2					AP
3	95380–12700	NUT	2					AP
4	90110–12M00	BOLT, HEXAGON SOCKET HEAD	2					AP
5	90201–12M16	WASHER, PLATE	2					AP
6	95780–12300	NUT, FLANGE	2					AP

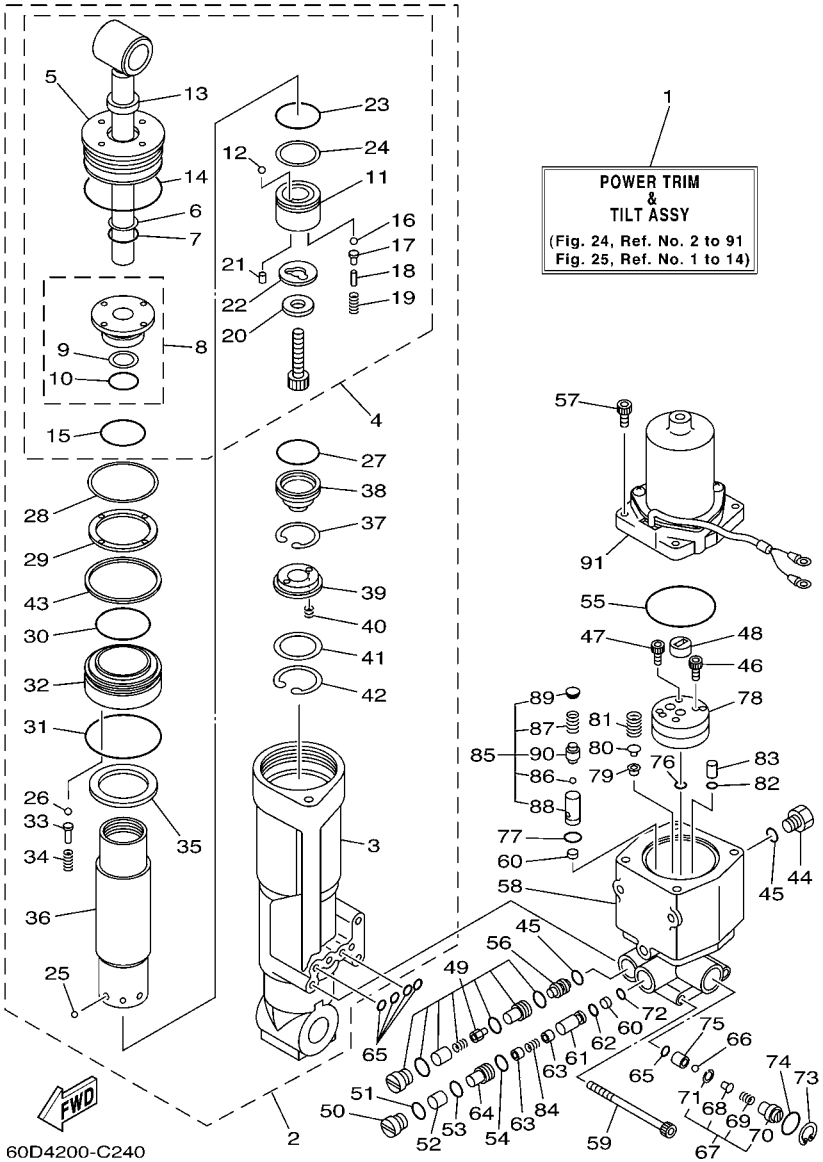

FIG. 24 POWER TRIM & TILT ASSY 1

REF. NO.	PART NO.	DESCRIPTION	60D4					REMARKS
1	67F–43800–03–4D	POWER TRIM & TILT ASSY	1					
2	67F–43840–02	POWER TILT ASSY	1					
3	67F–4380K–00	.CYLINDER, TILT SUB ASSY	1					
4	67F–43810–01	.TILT PISTON SUB ASSY	1					
5	67F–43821–00	..SCREW, TRIM CYLINDER END	1					
6	6H1–43872–10	..RING, BACK UP	1					
7	93210–18397	..O-RING	1					
8	67F–4380R–00	..CYLINDER END SUB ASSY	1					
9	6H1–43872–10	...RING, BACK UP	1					
10	93210–18397	...O-RING	1					
11	67F–4385A–01	..PISTON, TILT	1					
12	93501–08001	..BALL	1					
13	6H1–43812–00	..SEAL, DUST	1					
14	67F–43861–00	..O-RING	1					
15	62X–43862–00	..O-RING	1					
16	93501–08001	..BALL	2					
17	65W–4386A–00	..PIN, ABSORBER VALVE	2					
18	688–4386F–00	..PIN, STRAIGHT	2					
19	65W–43853–00	..SPRING, MAIN VALVE	2					
20	67F–43893–00	..WASHER	1					
21	93602–07244	..PIN, DOWEL	2					
22	67F–22435–00	..PLATE, VALVE 2	1					
23	93210–29375	..O-RING	1					
24	62X–43871–00	..RING, BACK UP	1					
25	93503–16003	.BALL	6					
26	93501–08001	.BALL	5					
27	67F–43863–00	.O-RING	1					

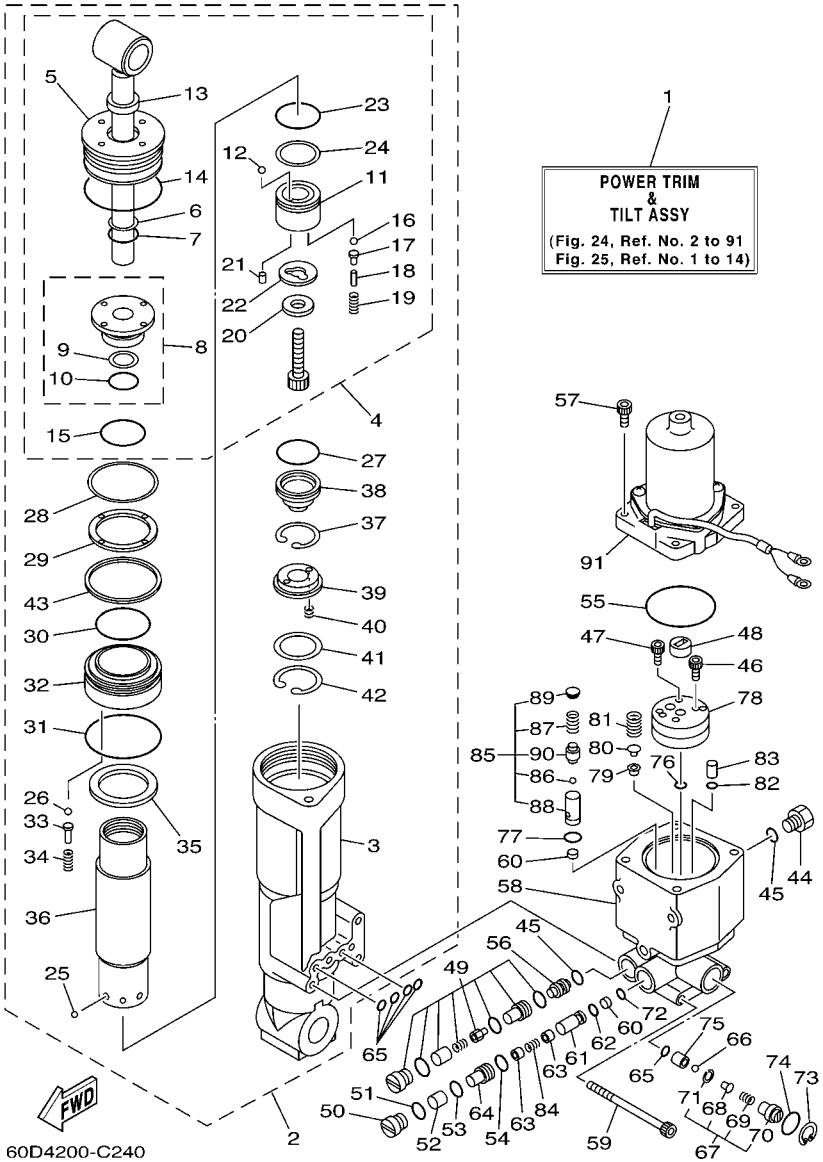

FIG. 24 POWER TRIM & TILT ASSY 1

REF. NO.	PART NO.	DESCRIPTION	60D4					REMARKS
28	67F–43899–00	.PLATE STOPPER	1					
29	67F–43816–00	.FILTER 1	1					
30	67F–43862–00	.O-RING	1					
31	62X–43865–00	.O-RING	1					
32	67F–4388A–00	.PISTON, TRIM	1					
33	6T4–4386A–00	.PIN, ABSORBER VALVE	5					
34	67F–43857–00	.SPRING, ABSORBER VALVE	5					
35	67F–4381J–00	.PLATE	1					
36	67F–22471–01	.CYLINDER, SHOCK ABSORBER	1					
37	67F–43875–00	.RING, SNAP	1					
38	67F–4381B–00	.FREE PISTON SUB ASSY	1					
39	62X–43899–00	.PLATE STOPPER	1					
40	62X–4384H–00	.SPRING	2					
41	1UF–22434–00	.PLATE, VALVE 1	1					
42	62X–43875–00	.RING, SNAP	1					
43	67F–43871–00	.RING, BACK UP	1					
44	6H1–43829–00	PLUG, RESERVOIR	1					
45	93210–09165	O-RING	2					
46	91318–06035	BOLT	3					
47	91318–06020	BOLT	1					
48	6H1–43831–10	CONNECTOR, SHAFT	1					
49	67F–43802–00	VALVE SUB ASSY	2					
50	67F–4382F–00	ADAPTOR 3	1					
51	6H1–43866–00	O-RING	1					
52	67F–43817–00	FILTER 2	1					
53	93210–10M74	O-RING	1					
54	6H1–43867–00	O-RING	1					

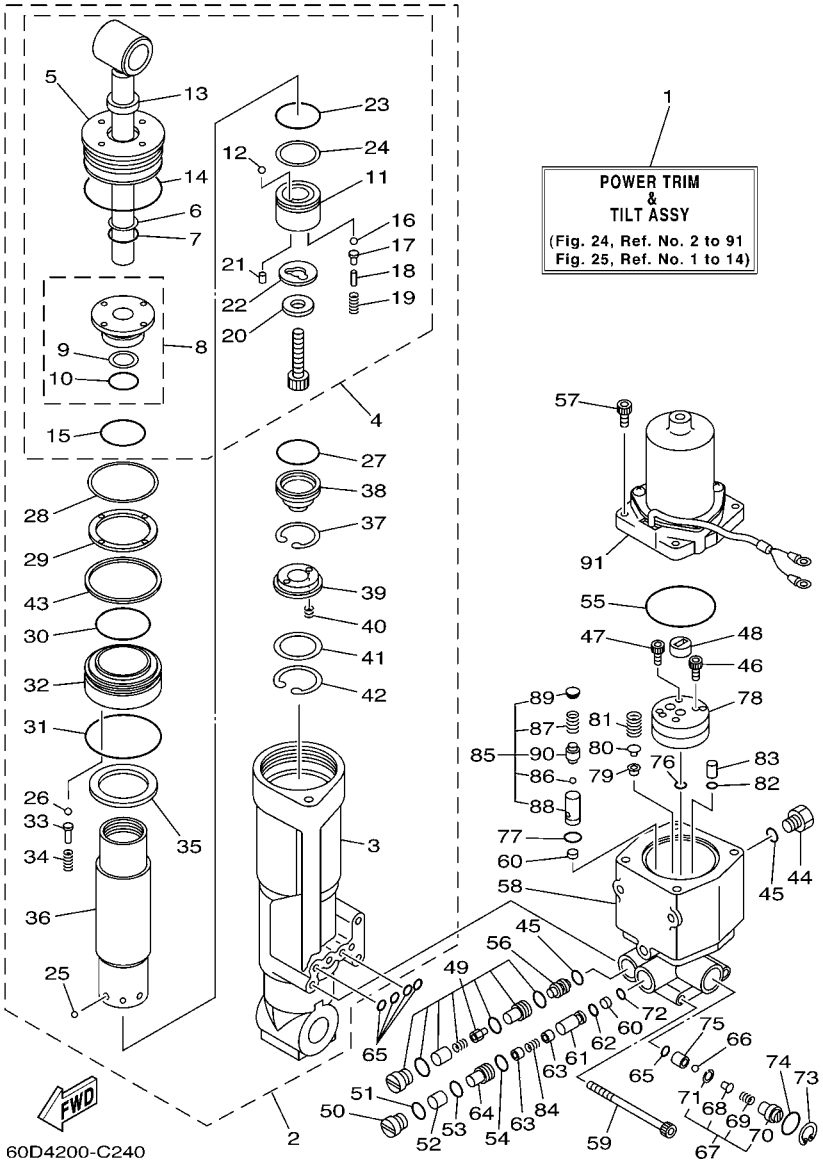

FIG. 24 POWER TRIM & TILT ASSY 1

REF. NO.	PART NO.	DESCRIPTION	60D4					REMARKS
55	62X–43865–00	O-RING	1					
56	62X–43841–00	PISTON, SHUTTLE	1					
57	65W–43888–00	BOLT, SOCKET	4					
58	67F–43825–03	HOUSING, TRIM & TILT	1					
59	62X–43878–00	BOLT, SOCKET	3					
60	6H1–43816–00	FILTER 1	2					
61	67F–43851–00	SEAT, RELIEF VALVE	1					
62	93210–07003	O-RING	1					
63	67F–43808–00	SEAT VALVE COMP. 1	2					
64	67F–4382G–00	SCREW, VALVE SEAT	1					
65	93210–064A5	O-RING	5					
66	93505–32038	BALL	1					
67	61A–43860–20	MANUAL VALVE SUB-ASSY	1					
68	61A–43848–00	.ROD, MANUAL RELEASE	1					
69	61A–43854–00	.SPRING, MANUAL RELEASE	1					
70	61A–43845–00	.SCREW, MANUAL RELEASE	1					
71	61A–43875–00	.RING, SNAP	1					
72	93210–06100	O-RING	1					
73	6H1–43875–00	RING, SNAP	1					
74	93210–18397	O-RING	1					
75	61A–43847–00	SEAT, MANUAL VALVE	1					
76	65W–43862–00	O-RING	2					
77	93210–11368	O-RING	1					
78	67F–43830–00	GEAR PUMP ASSY	1					
79	6H1–4384F–10	SEAL, MAIN VALVE	1					
80	6H1–43844–10	PIN, VALVE SUPPORT	1					
81	6H1–43856–10	SPRING, DOWN RELIEF	1					

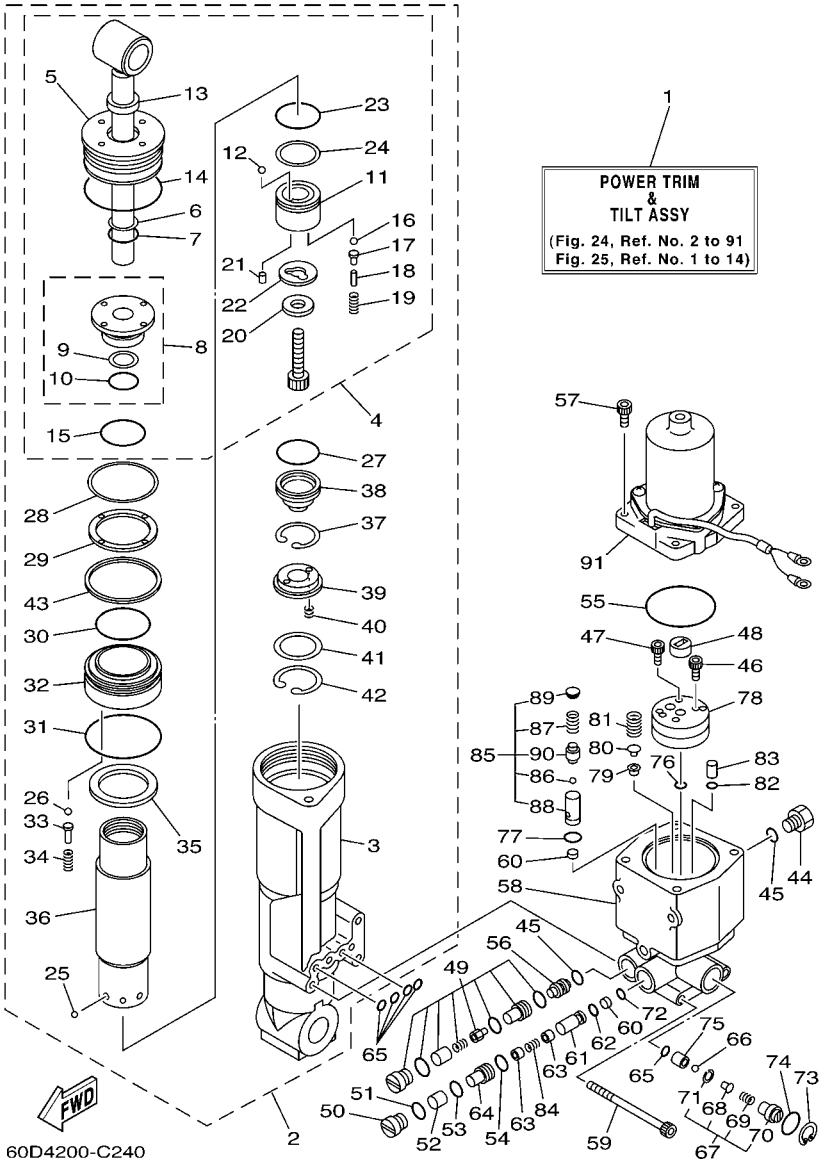

FIG. 24 POWER TRIM & TILT ASSY 1

REF. NO.	PART NO.	DESCRIPTION	60D4					REMARKS
82	65W–43861–00	O-RING	2					
83	65W–43817–00	FILTER 2	2					
84	67F–4385H–00	SPRING, SEAL	1					
85	67F–43850–00	VALVE SUB ASSY	1					
86	93501–08001	.BALL	1					
87	6H1–43856–10	.SPRING, DOWN RELIEF	1					
88	67F–43895–00	.SEAT, RELIEF VALVE	1					
89	67F–43843–00	.SCREW, VALVE LOCK	1					
90	67F–4386A–00	.PIN, ABSORBER VALVE	1					
91	67F–43880–00	MOTOR ASSY	1					REFER TO FIG.25

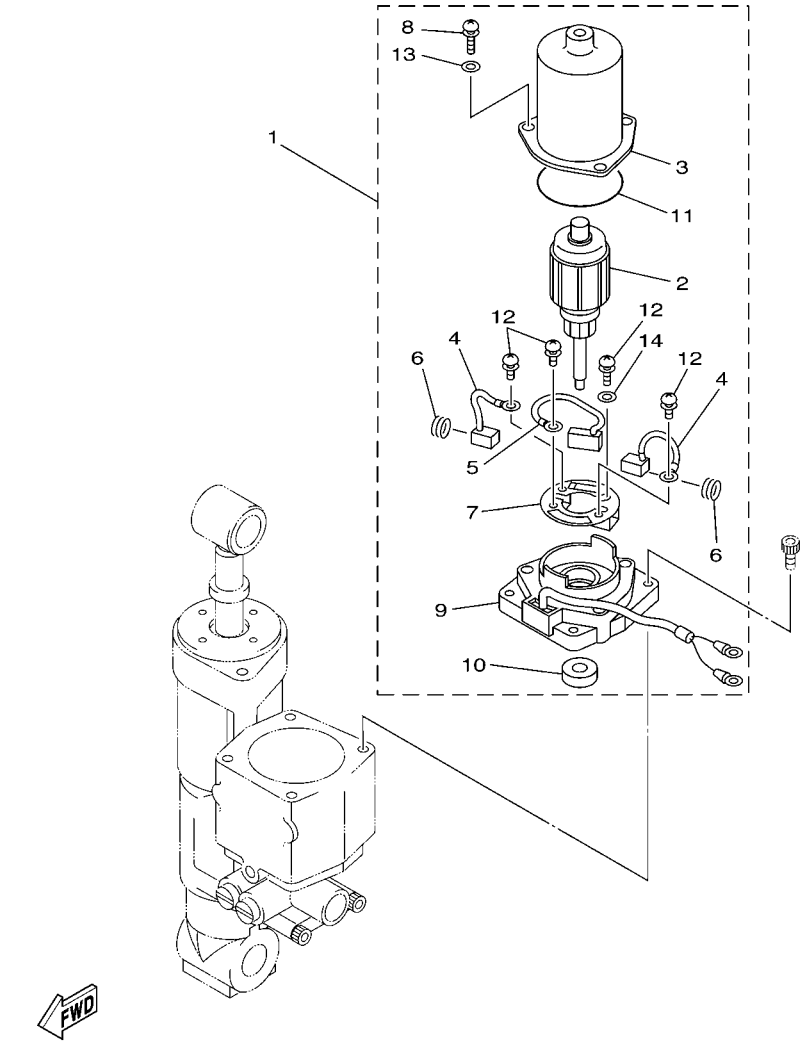

FIG. 25 POWER TRIM & TILT ASSY 2

REF. NO.	PART NO.	DESCRIPTION	60D4					REMARKS
1	67F–43880–00	MOTOR ASSY	1					
2	67F–43805–00	.ARMATURE ASSY	1					
3	67F–43804–00	.STATOR ASSY	1					
4	67F–43891–00	.BRUSH 1	2					
5	67F–82181–00	.CIRCUIT BREAKER COMP.	1					
6	67F–4386K–00	.SPRING, BRUSH	2					
7	67F–4380F–00	.PLATE, BRUSH HOLDER	1					
8	67F–43886–00	.BOLT	3					
9	67F–43881–00	.FRAME, END	1					
10	67F–43882–00	.OIL SEAL	1					
11	67F–43896–00	.O-RING	1					
12	67F–43879–00	.SCREW, WITH WASHER	4					
13	67F–4387G–00	.WASHER	3					
14	67F–4387J–00	.WASHER, SPECIAL 2	1					

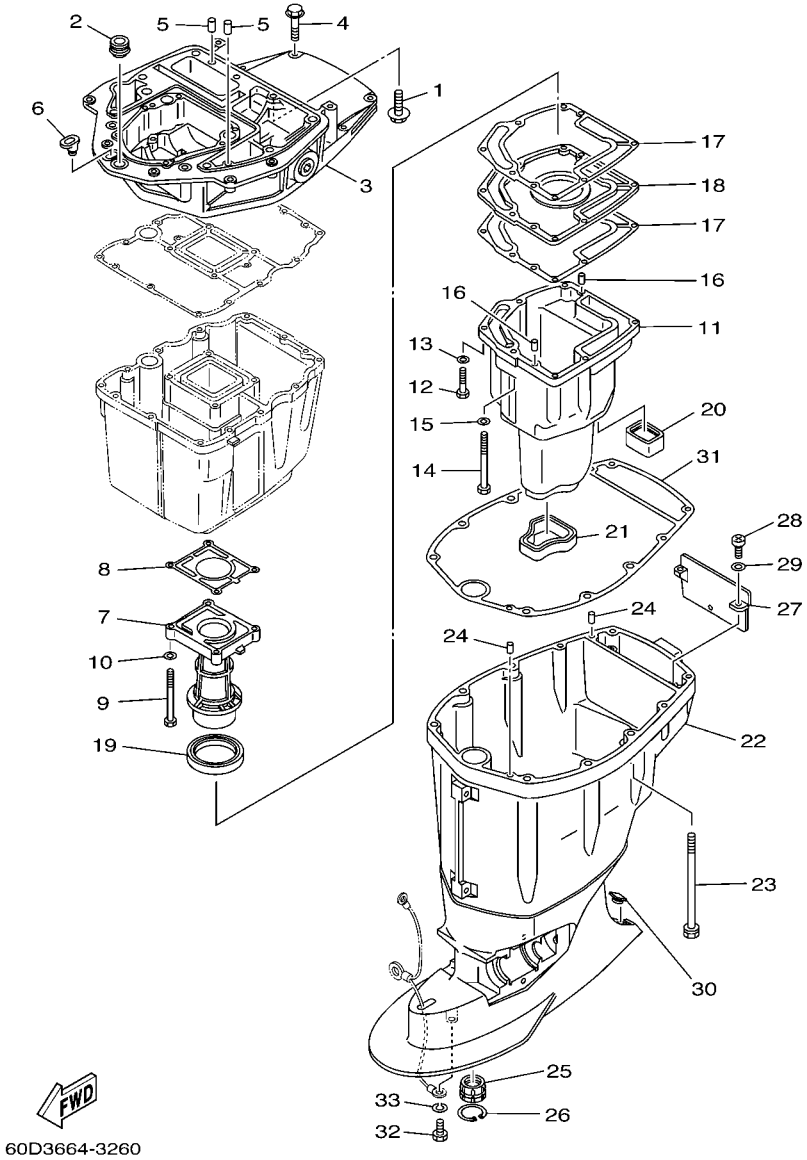

FIG. 26 UPPER CASING

REF. NO.	PART NO.	DESCRIPTION	60D4					REMARKS
1	90119–08M58	BOLT, WITH WASHER	2					
2	67F–42724–00	GROMMET	1					
3	67F–41137–02–94	GUIDE, EXHAUST	1					
4	97575–08540	BOLT, WITH WASHER	4					
5	93608–16M16	PIN, DOWEL	2					
6	6G1–42727–00	GROMMET	1					
7	60C–41131–01–5B	MANIFOLD, EXT. 1	1					
8	67F–41133–A1	GASKET, EXHAUST MANIFOLD 1	1					
9	97075–06070	BOLT	4					
10	92995–06600	WASHER	4					
11	60D–14711–00–5B	MUFFLER 1	1					
12	97075–06030	BOLT	6					
13	92995–06600	WASHER	6					
14	97075–06050	BOLT	1					
15	92995–06600	WASHER	1					
16	93606–19M23	PIN, DOWEL	2					
17	67F–41134–A0	GASKET, EXHAUST MANIFOLD	2					
18	67F–45181–00–5B	PLATE	1					
19	67F–41138–00	SEAL, EXT. 1	1					
20	67F–45127–00	SEAL	1					
21	67F–45123–00	GASKET, MUFFLER	1					
22	67F–45111–10–4D	CASING, UPPER	1					
23	90119–10M08	BOLT, WITH WASHER	6					
24	93608–16M16	PIN, DOWEL	2					
25	67F–45318–00	BUSHING, DRIVE SHAFT	1					
26	93420–36M01	CIRCLIP	1					
27	67F–45151–00	COVER, UPPER CASING	1					

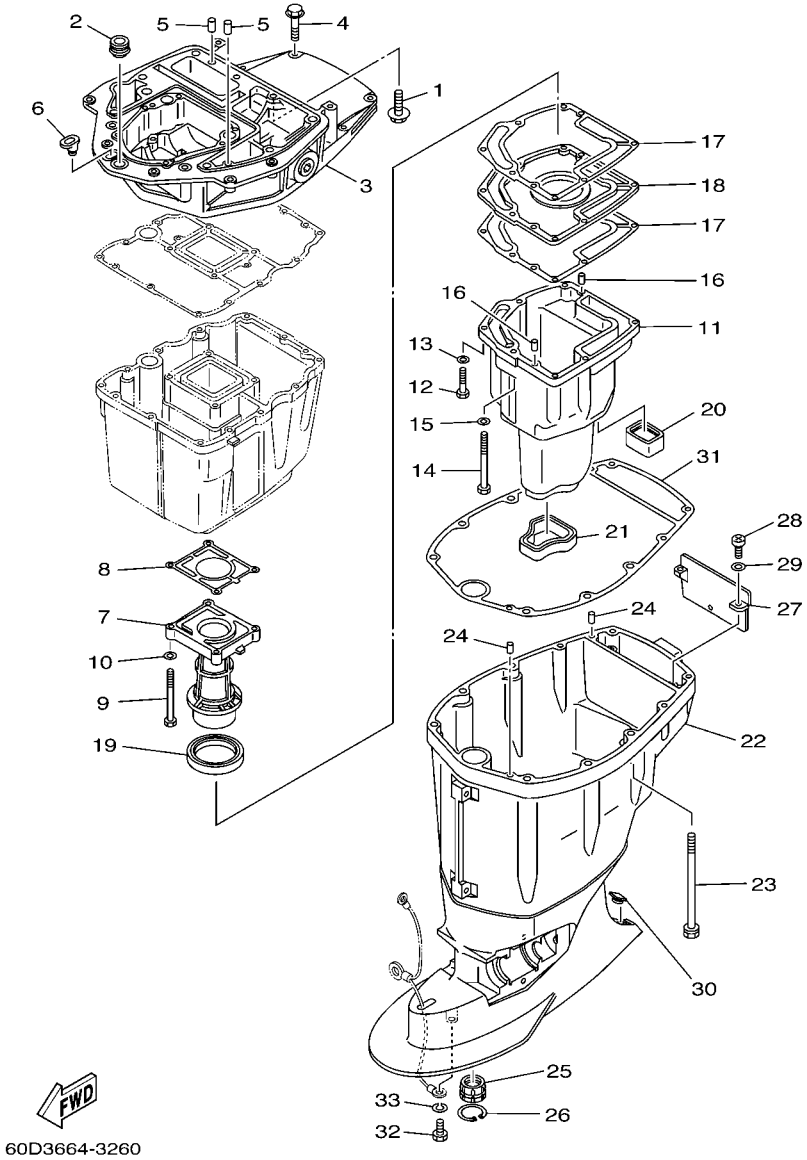

FIG. 26 UPPER CASING

REF. NO.	PART NO.	DESCRIPTION	60D4					REMARKS
28	97880–06016	SCREW, PAN HEAD	2					
29	92990–06600	WASHER, PLATE	2					
30	67F–45155–00	CAP	1					
31	67F–45113–00	GASKET, UPPER CASING	1					
32	97095–08016	BOLT	1					
33	92995–08100	WASHER	1					

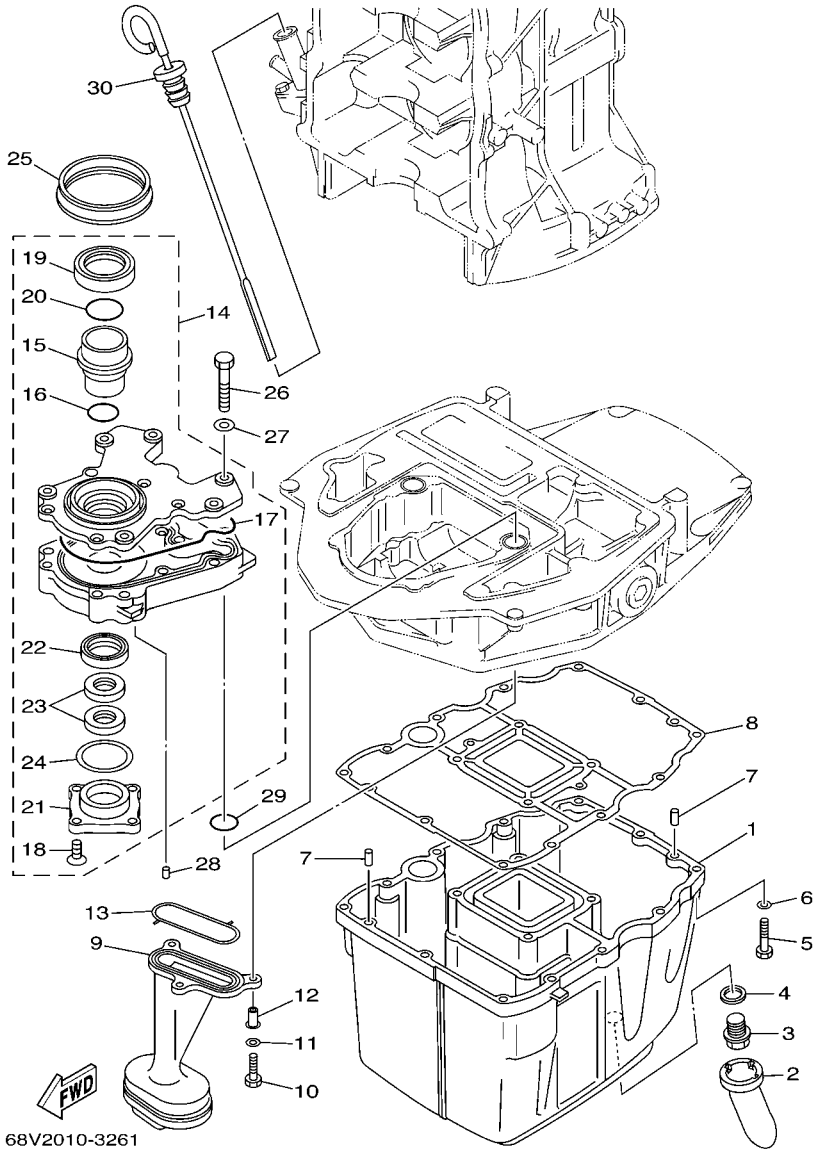

FIG. 27 OIL PAN

REF. NO.	PART NO.	DESCRIPTION	60D4					REMARKS
1	67F–15311–01–5B	OIL PAN	1					
2	67F–15316–00	DAMPER 1	1					
3	90340–14M06	PLUG, STRAIGHT SCREW	1					
4	90430–14M09	GASKET	1					
5	97075–06025	BOLT	12					
6	92995–06600	WASHER	12					
7	93606–12019	PIN, DOWEL	2					
8	68V–15312–00	GASKET, OIL PAN	1					
9	67F–13411–00	STRAINER, OIL	1					
10	97027–06025	BOLT	3					
11	92907–06600	WASHER, PLATE	3					
12	90387–06M64	COLLAR	3					
13	67F–13415–00	SEAL, OIL STRAINER	1					
14	67F–13300–10	OIL PUMP ASSY	1					
15	67F–13314–02	.SHAFT, PUMP	1					
16	67F–13473–01	.O-RING	1					
17	67F–13329–00	.GASKET, PUMP COVER	1					
18	67F–13495–00	.SCREW	1					
19	67F–13119–01	.OIL SEAL	1					
20	67F–13769–00	.O-RING	1					
21	67F–13914–00	.HOUSING, PUMP	1					
22	67F–13631–03	.OIL SEAL	1					
23	67F–13149–00	.OIL SEAL	2					
24	67F–13339–00	.GASKET, PUMP COVER	1					
25	67F–13338–00	SEAL	1					
26	97095–06045	BOLT	6					
27	92995–06600	WASHER	6					

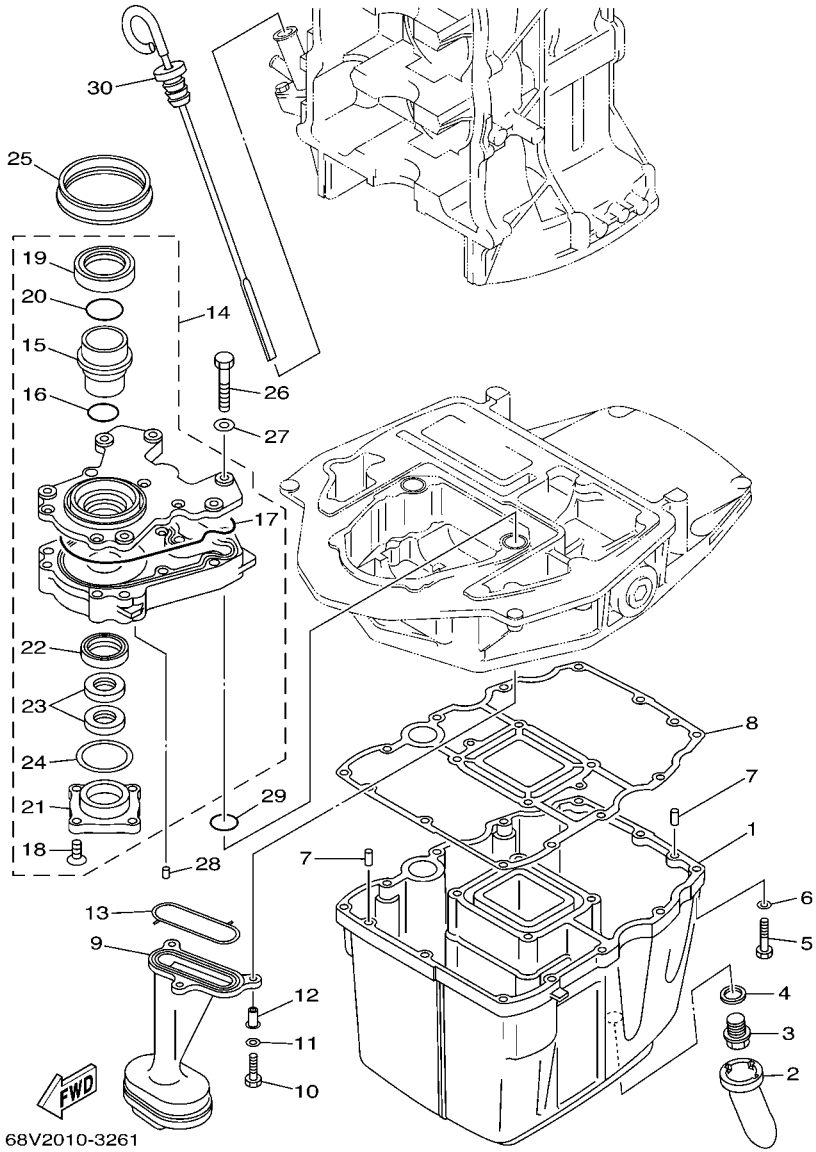

FIG. 27 OIL PAN

REF. NO.	PART NO.	DESCRIPTION	60D4					REMARKS
28	93604–12M07	PIN, DOWEL	2					
29	93210–19MJ1	O-RING	2					
30	68V–15362–10	PLUG, OIL LEVEL	1					

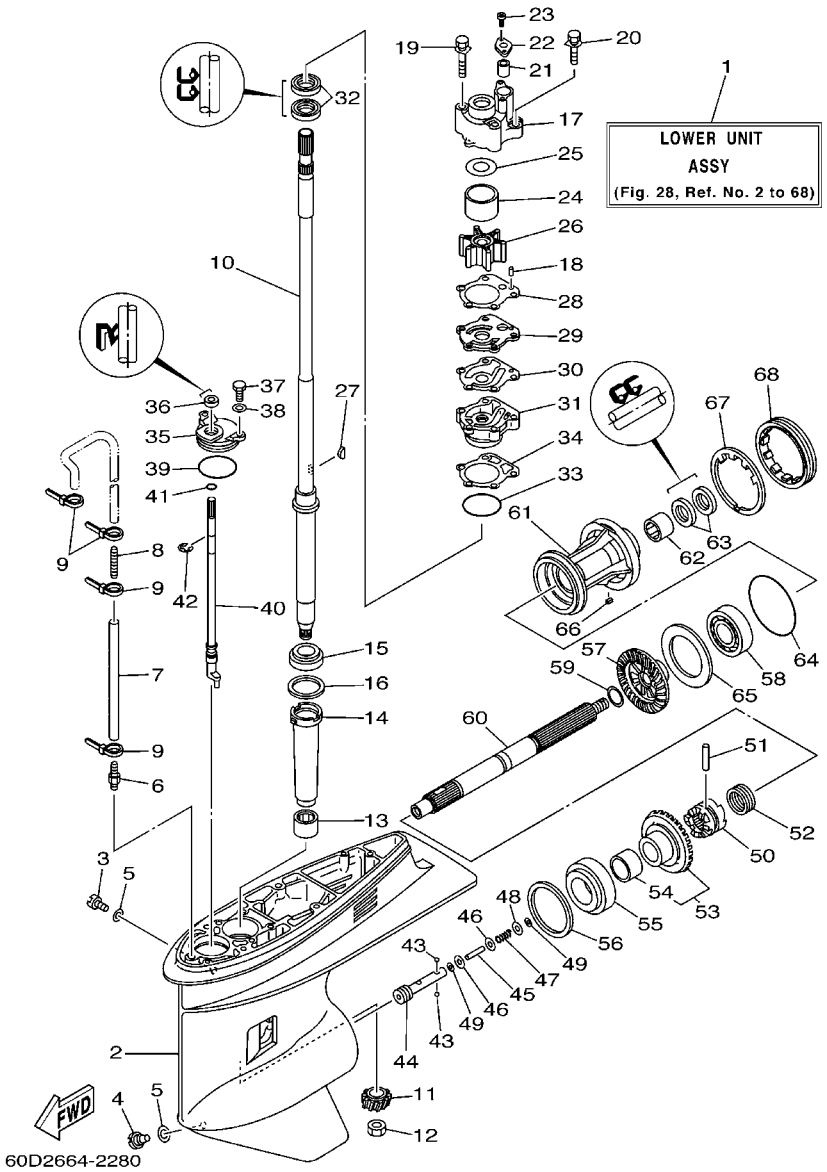

FIG. 28 LOWER CASING & DRIVE 1

REF. NO.	PART NO.	DESCRIPTION	60D4					REMARKS
1	60D–45300–10–4D	LOWER UNIT ASSY	1					L
2	67F–45301–00–4D	CASING, LOWER	1					
3	90340–08002	PLUG, STRAIGHT SCREW	1					
4	688–45341–10	PLUG, DRAIN	1					
5	90430–08020	GASKET	2					
6	6E5–45378–00	NIPPLE, HOSE	1					
7	90445–07M31	HOSE (L200)	1					L
8	6E5–83558–10	END, NIPPLE	1					
9	90465–11M10	CLAMP	4					
10	67F–45501–10	DRIVE SHAFT COMP.	1					L
11	67F–45551–00	PINION	1					
12	90170–16M01	NUT	1					
13	93315–325W4	BEARING	1					
14	688–45536–01	SLEEVE, DRIVE SHAFT	1					
15	93332–000U3	BEARING	1					
16	688–45587–01–10	SHIM (T:0.10MM)	1					UR
	688–45587–01–12	SHIM (T:0.12MM)	1					UR
	688–45587–01–15	SHIM (T:0.15MM)	1					UR
	688–45587–01–18	SHIM (T:0.18MM)	1					UR
	688–45587–01–30	SHIM (T:0.30MM)	1					UR
	688–45587–01–40	SHIM (T:0.40MM)	1					UR
	688–45587–01–50	SHIM (T:0.50MM)	1					UR
17	67F–44311–00	HOUSING, WATER PUMP	1					
18	93604–10M03	PIN, DOWEL	2					
19	90119–08M87	BOLT, WITH WASHER	2					
20	90119–08M13	BOLT, WITH WASHER	2					
21	663–44366–00	DAMPER, WATER SEAL	1					

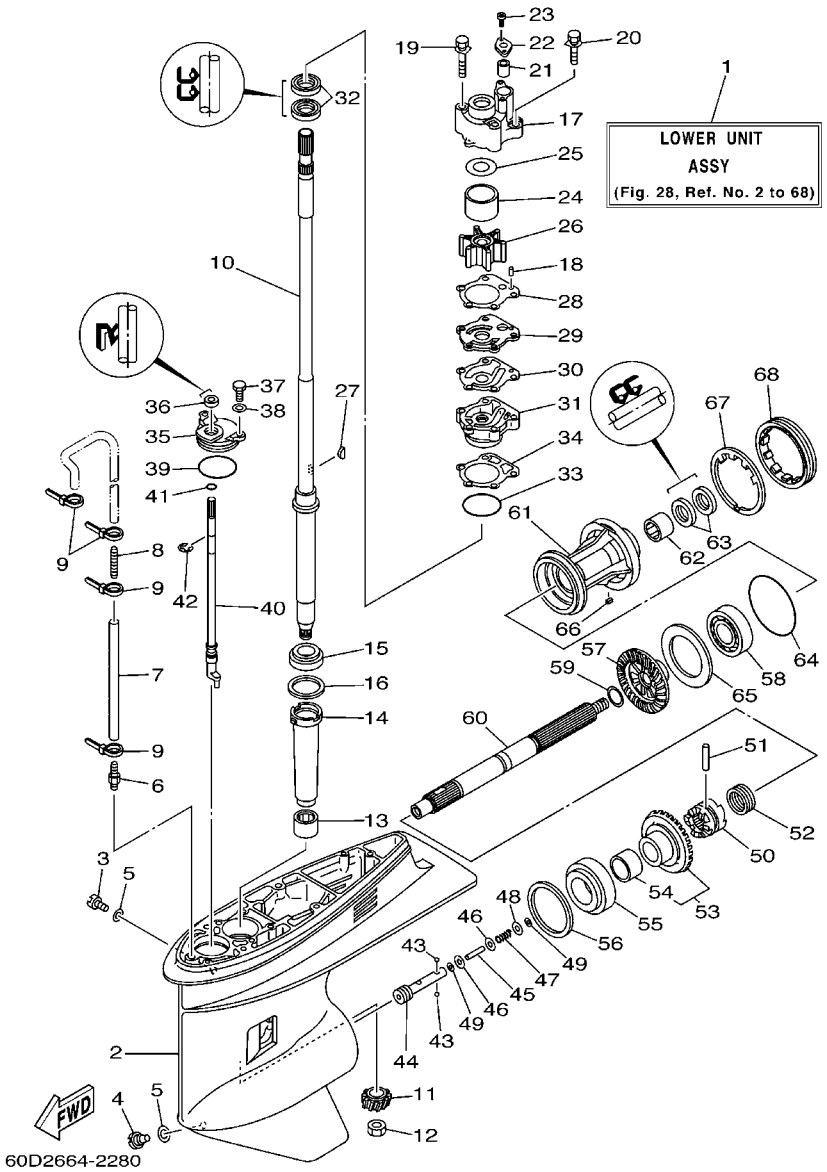

FIG. 28 LOWER CASING & DRIVE 1

REF. NO.	PART NO.	DESCRIPTION	60D4					REMARKS
22	90480–19M06	GROMMET	1					
23	97780–40512	SCREW, TAPPING	2					
24	60D–44322–40	INSERT, CARTRIDGE	1					FOR CHROMATE
25	688–44321–41	INNER PLATE, CARTRIDGE	1					FOR CHROMATE
26	67F–44352–00	IMPELLER	1					
27	90280–04M04	KEY, WOODRUFF	1					
28	688–44315–A0	GASKET, WATER PUMP	1					
29	60D–44323–40	OUTER PLATE, CARTRIDGE	1					FOR CHROMATE
30	688–44324–A0	GASKET, CARTRIDGE	1					
31	688–44341–01–94	HOUSING, WATER PUMP	1					
32	93101–25M03	OIL SEAL	2					
33	93210–46044	O-RING	1					
34	688–44316–A0	GASKET, WATER PUMP	1					
35	688–45321–00	PLATE	1					
36	93106–09014	OIL SEAL	1					
37	97095–06016	BOLT	2					
38	92995–06600	WASHER	2					
39	93210–49046	O-RING	1					
40	67F–44150–00	SHIFT CAM ASSY	1					
41	93210–07003	O-RING	1					
42	99001–08600	CIRCLIP	1					
43	93503–16003	BALL	2					
44	67F–45634–00	SLIDE, SHIFT	1					
45	6H1–45668–00	SHAFT, FREE	1					
46	6H1–45635–00	PLUNGER, SHIFT	2					
47	90501–12M48	SPRING, COMPRESSION	1					
48	90201–03313	WASHER, PLATE	1					

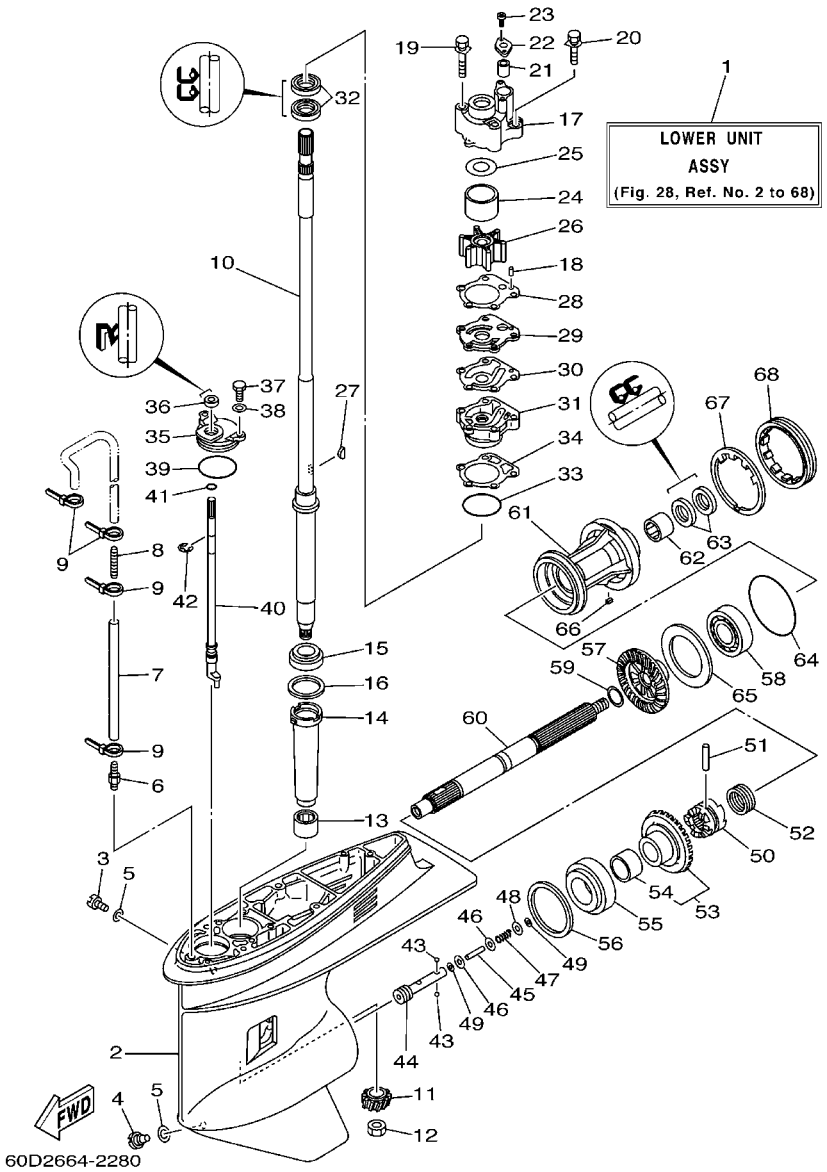

FIG. 28 LOWER CASING & DRIVE 1

REF. NO.	PART NO.	DESCRIPTION	60D4					REMARKS
49	90183–02M03	NUT, SPRING	2					
50	67F–45631–00	CLUTCH, DOG	1					
51	90250–07M02	PIN, STRAIGHT	1					
52	688–45633–00	RING, CROSS PIN	1					
53	67F–45560–00	GEAR	1					
54	93317–322V0	.BEARING	1					
55	93332–000UD	BEARING	1					
56	688–45567–01–10	SHIM (T:0.10MM)	1					UR
	688–45567–01–12	SHIM (T:0.12MM)	1					UR
	688–45567–01–15	SHIM (T:0.15MM)	1					UR
	688–45567–01–18	SHIM (T:0.18MM)	1					UR
	688–45567–01–30	SHIM (T:0.30MM)	1					UR
	688–45567–01–40	SHIM (T:0.40MM)	1					UR
	688–45567–01–50	SHIM (T:0.50MM)	1					UR
57	67F–45571–00	GEAR	1					
58	93306–207U0	BEARING	1					
59	90201–25M05	WASHER, PLATE	1					
60	67F–45611–01	SHAFT, PROPELLER	1					
61	67F–45331–00–94	HOUSING, BEARING	1					
62	93317–325U0	BEARING	1					
63	93101–25M03	OIL SEAL	2					
64	93210–86M39	O-RING	1					
65	67F–45576–00	WASHER, THRUST	1					
66	90282–04010	KEY, STRAIGHT	1					
67	688–45383–02	WASHER, CLAW	1					
68	688–45384–00	NUT	1					

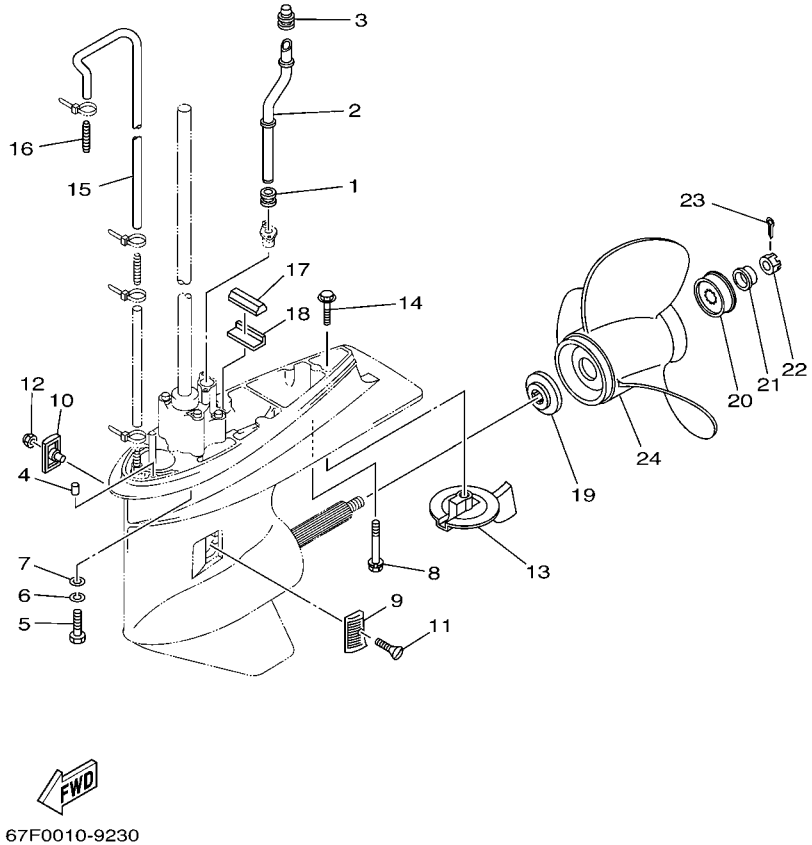

FIG. 29 LOWER CASING & DRIVE 2

REF. NO.	PART NO.	DESCRIPTION	60D4					REMARKS
1	663–44367–00	DAMPER, WATER SEAL	1					
2	67F–44361–10	TUBE, WATER	1					L
3	67F–44365–00	DAMPER, WATER SEAL	1					
4	93606–12019	PIN, DOWEL	2					
5	97075–10040	BOLT	4					L
6	92995–10100	WASHER	4					L
7	92995–10600	WASHER	4					L
8	90119–08M84	BOLT, WITH WASHER	1					L
9	6H1–45214–00	COVER, WATER INLET	1					
10	6H1–45215–00	COVER, WATER INLET	1					
11	90151–05M00	SCREW, COUNTERSUNK	1					
12	90185–05002	NUT, SELF-LOCKING	1					
13	67F–45371–00	TAB-TRIM	1					
14	90105–10M67	BOLT, FLANGE	1					
15	90445–07ME0	HOSE (L1220)	1					
16	6E5–83558–00	END, NIPPLE	1					
17	688–45375–00	DAMPER, SEAL	1					
18	663–45376–00–94	GUIDE, SEAL DAMPER	1					
19	688–45987–01	SPACER	1					
20	67F–45997–00	SPACER	1					
21	90389–25M00	BUSH	1					
22	90171–16011	NUT, CASTLE	1					
23	91490–40025	PIN, COTTER	1					
24	6E5–45941–00–EL	PROPELLER (3X13"X19"-K)	1					UR
	6E5–45943–00–EL	PROPELLER (3X12-5/8"X21"-K)	1					UR
	6E5–45945–01–EL	PROPELLER (3X13-1/4"X17"-K)	1					UR
	6E5–45947–00–EL	PROPELLER (3X13-1/2"X15"-K)	1					UR

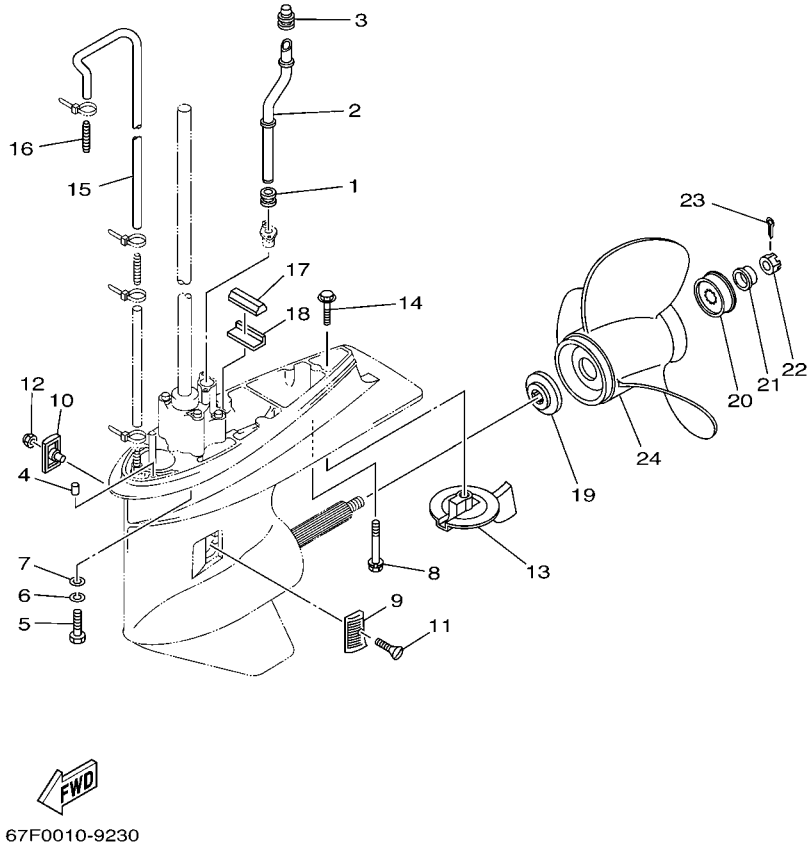

FIG. 29 LOWER CASING & DRIVE 2

REF. NO.	PART NO.	DESCRIPTION	60D4					REMARKS
24	6E5–45949–00–EL	PROPELLER (3X13-5/8"X13"-K)	1					UR
	6E5–45952–00–EL	PROPELLER (3X13"X23"-K)	1					UR
	6E5–45954–00–EL	PROPELLER (3X14"X11"-K)	1					UR
	6E5–45956–00–EL	PROPELLER (3X13"X25"-K)	1					UR
	688–45970–03–98	PROPELLER (3X13"X19"-K)	1					UR
	688–45972–02–98	PROPELLER (3X13"X21"-K)	1					UR
	688–45974–02–98	PROPELLER (3X13"X23"-K)	1					UR
	688–45976–01–98	PROPELLER (3X13"X25"-K)	1					UR
	688–45978–60–98	PROPELLER (3X13-1/2"X16"-K)	1					UR
	688–45930–02–98	PROPELLER (3X13"X17"-K)	1					UR
	688–45932–60–98	PROPELLER (3X13-1/2"X14"-K)	1					UR

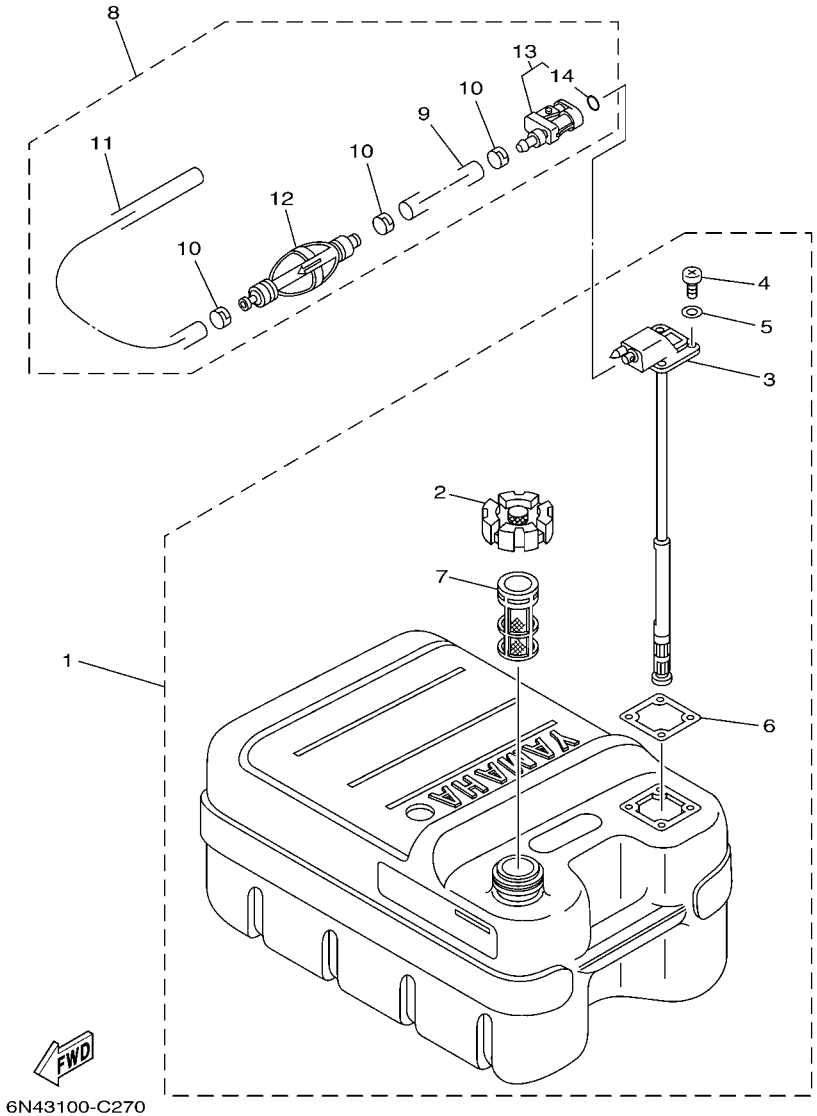

FIG. 30 FUEL TANK

REF. NO.	PART NO.	DESCRIPTION	60D4					REMARKS
1	6YJ–24201–10	FUEL TANK ASSY (24L)	1					AP
2	6YJ–24610–01	.CAP ASSY	1					
3	6Y1–24260–12	.FUEL METER ASSY	1					WITH INDICATOR
4	98586–05016	.SCREW, PAN HEAD	4					
5	6Y1–24329–00	.SEAL	4					
6	6Y1–24268–00	.GASKET, FUEL METER	1					
7	6YJ–24167–00	.STRAINER	1					
8	6Y2–24306–44	FUEL PIPE COMP. 1	1					AP
9	90445–13M01	.HOSE (L=2050)	1					
10	6E5–24351–51	.BAND 1	3					
11	90445–13M35	.HOSE (L250)	1					
12	6Y2–24360–60	.PRIMER PUMP ASSY	1					
13	6Y2–24305–05	.FUEL PIPE JOINT COMP. 2	1					
14	93210–08287	..O-RING	1					

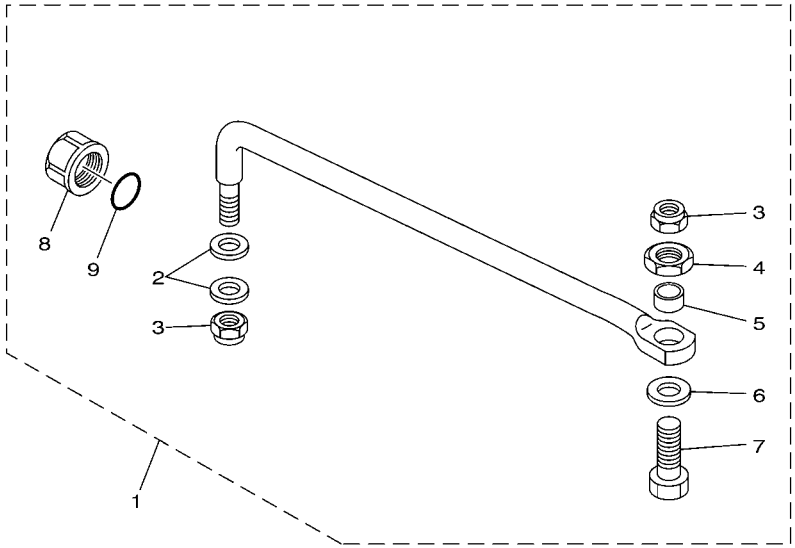

67F0010-9250

FIG. 31 STEERING GUIDE

REF. NO.	PART NO.	DESCRIPTION	60D4					REMARKS
1	67F–61350–00	STEERING GUIDE ATTACHMENT KIT	1					AP
2	90201–10M20	.WASHER, PLATE	2					
3	90185–09M01	.NUT, SELF-LOCKING	2					
4	90170–09M03	.NUT	1					
5	90387–10M42	.COLLAR	1					
6	90201–10M63	.WASHER, PLATE	1					
7	90101–09M01	.BOLT	1					
8	6E5–43145–01	.CAP, CLAMP BRACKET	1					
9	93210–16275	.O-RING	1					

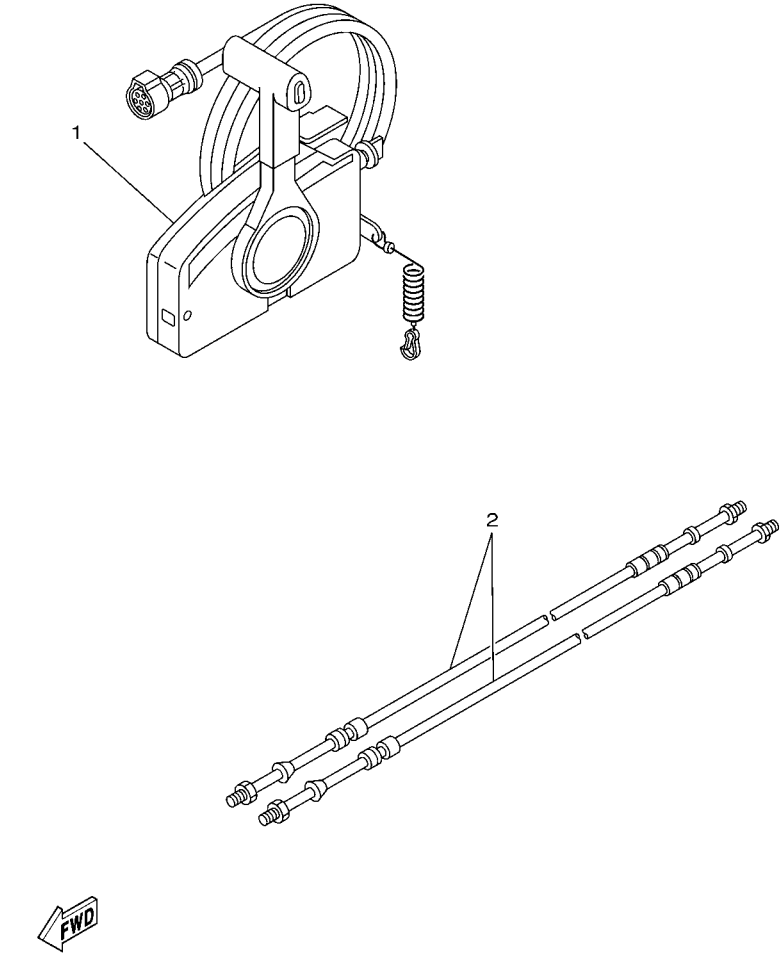

FIG. 32 REMOTE CONTROL BOX

REF. NO.	PART NO.	DESCRIPTION	60D4					REMARKS
1	703–48205–A4	REMOTE CONTROL ASSY (10P)	1					AP WITH PT/T SW.
2	701–48320–70	CABLE, REMOTE CONTROL L=20F	2					

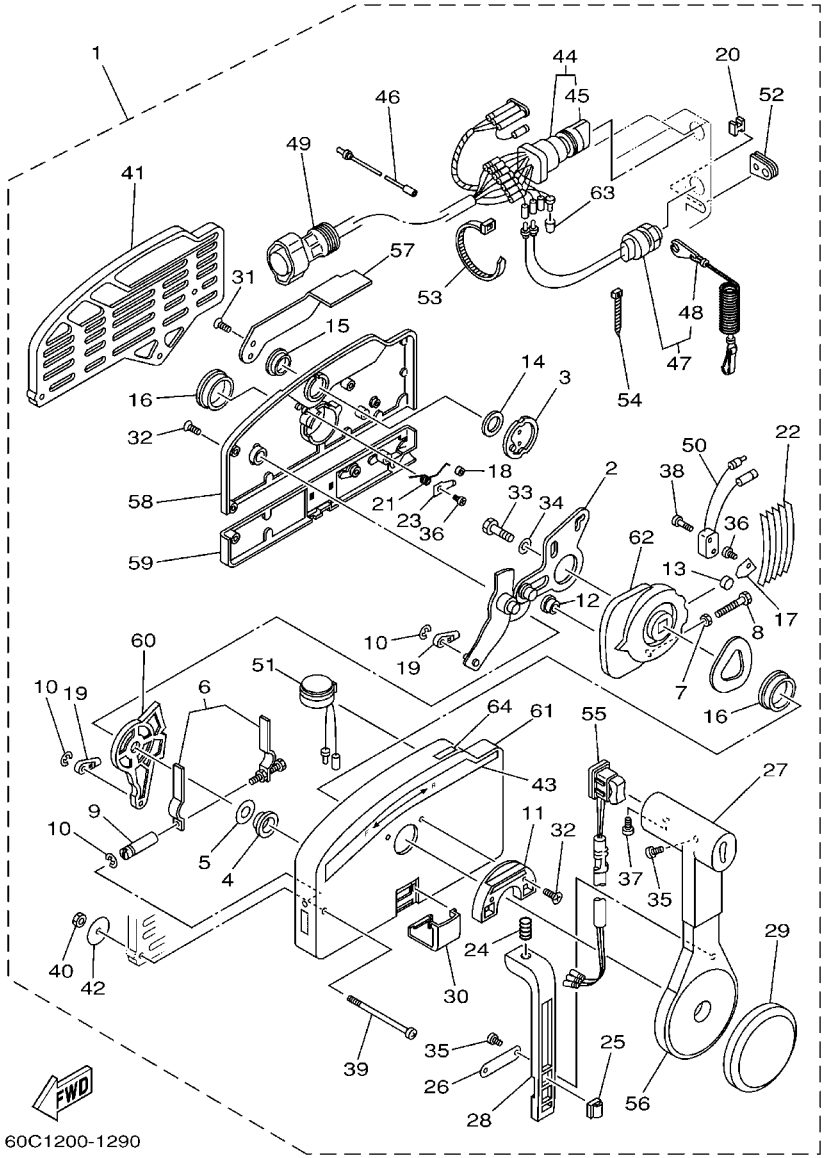

FIG. 33 REMOTE CONTROL ASSY

REF. NO.	PART NO.	DESCRIPTION	60D4					REMARKS
1	703–48205–A4	REMOTE CONTROL ASSY (10P)	1					AP WITH PT/T SW.
2	703–48261–01	.ARM, THROTTLE	1					
3	703–48153–00	.SHAFT, FREE ACCEL.	1					
4	703–48235–00	.BUSHING	1					
5	703–48268–00	.SPACER	1					
6	703–48264–00	.FRICTION, THROTTLE	1					
7	95380–05600	.NUT	1					
8	97380–05025	.BOLT	1					
9	703–48265–00	.SHAFT, FRICTION	1					
10	93430–06024	.CIRCLIP	3					
11	703–48245–00	.PLATE, LOCK	1					
12	703–48252–00	.ROLLER, CAM	1					
13	701–48248–00	.ROLLER, FREE ACCEL.	1					
14	703–48198–00	.WASHER, WAVE	1					
15	703–48243–00	.BUSHING	1					
16	703–48236–00	.BUSHING 1	2					
17	703–48189–00	.RETAINER	1					
18	703–48234–00	.ROLLER, DETENT	1					
19	703–48345–01	.CABLE END, REMOTE CONTROL 2	2					
20	703–48358–00	.ANCHOR, CABLE	1					
21	703–48244–00	.SPRING, FREE ACCEL.	1					
22	703–48238–00	.SPRING, DETENT	5					
23	703–48246–00	.SPACER	1					
24	703–48227–00	.SPRING, NEUTRAL LOCK	1					
25	703–82594–00	.CLAMP	1					WITH PT/T SW.
26	703–48226–00	.PLATE, STOPPER	1					
27	703–48222–00	.GRIP, CONTROL LEVER	1					SINGLE

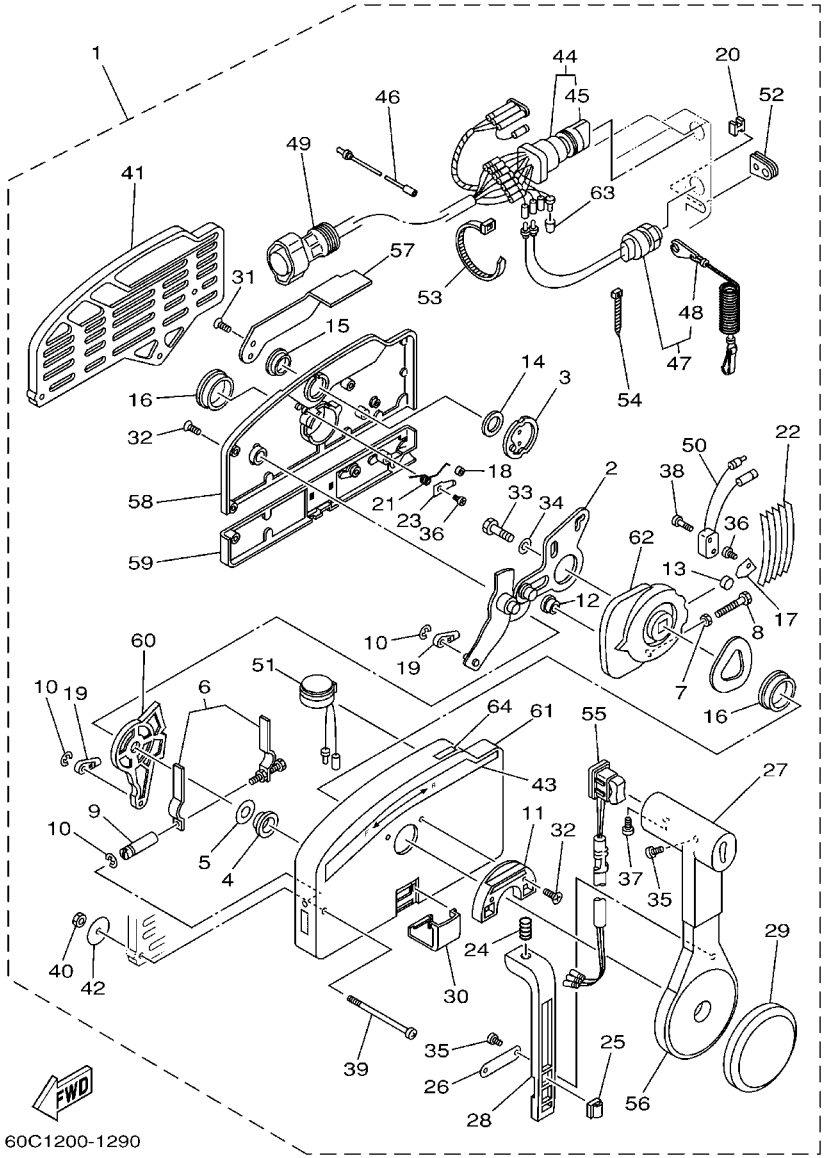

FIG. 33 REMOTE CONTROL ASSY

REF. NO.	PART NO.	DESCRIPTION	60D4					REMARKS
28	703–48223–00	.LOCK, NEUTRAL	1					
29	703–48225–00	.COVER	1					
30	703–48219–00	.COVER, LEAD	1					
31	703–48281–00	.SCREW	2					
32	703–48282–00	.SCREW	7					
33	97380–08030	.BOLT	1					
34	92990–08600	.WASHER, PLATE	1					
35	98580–04010	.SCREW, PAN HEAD	3					
36	98580–04006	.SCREW, PAN HEAD	2					
37	98580–05010	.SCREW, PAN HEAD	1					
38	98580–03015	.SCREW, PAN HEAD	2					
39	703–48291–10	.SCREW (M6)	3					
40	95380–06600	.NUT, HEXAGON	3					
41	703–48293–10	.SPACER, REMOTE CONTROL	1					SINGLE
42	701–48287–00	.WASHER	3					
43	703–48215–00	.GRAPHIC	1					
44	703–82510–12	.MAIN SWITCH ASSY	1					PRIME START
45	676–82577–00	..CAP, KEY	1					
46	703–82531–00	.WIRE, LEAD	1					
47	688–82575–01	.ENGINE STOP SWITCH ASSY	1					
48	682–82556–00	..STOPPER	1					
49	688–8258A–20	.EXTENSION, WIRE HARNESS	1					L:5M (10P)
50	703–82540–00	.NEUTRAL SWITCH ASSY	1					
51	703–83383–A0	.BUZZER	1					
52	703–48284–00	.GROMMET	1					
53	703–82591–00	.BAND	1					
54	703–82592–00	.BAND	1					

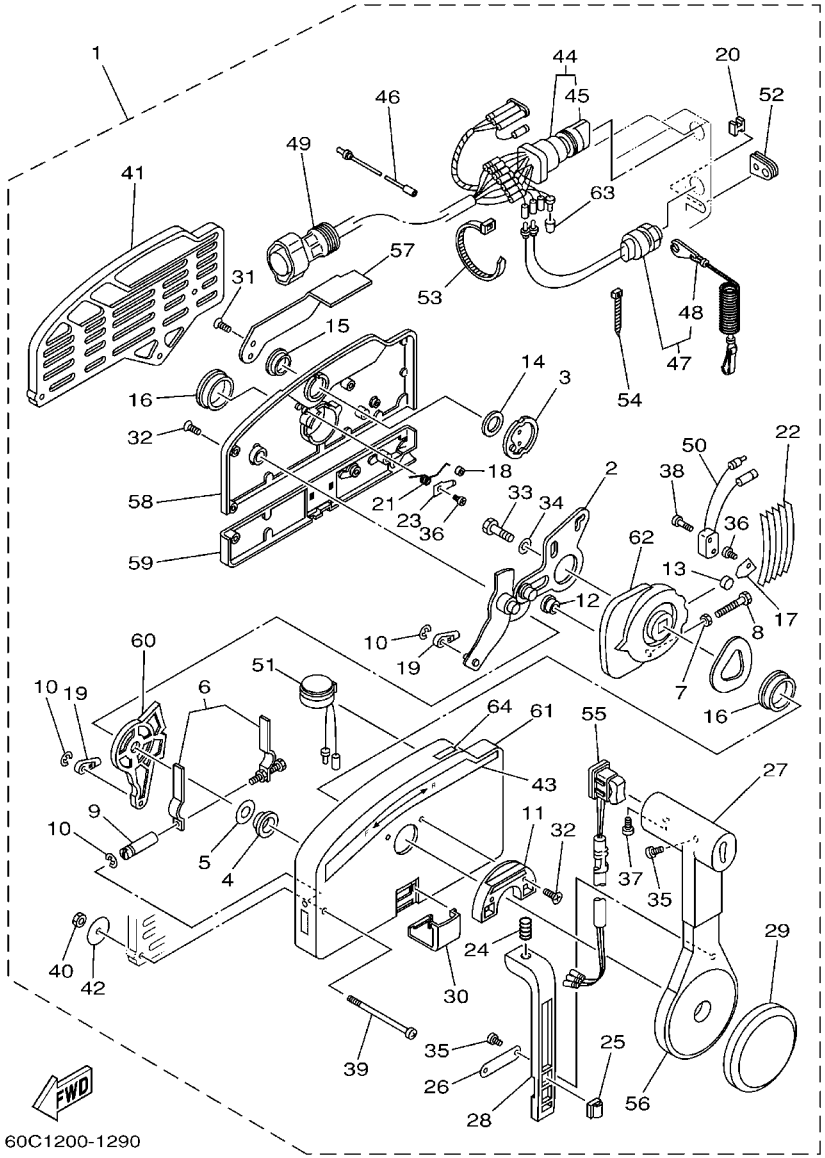

FIG. 33 REMOTE CONTROL ASSY

REF. NO.	PART NO.	DESCRIPTION	60D4					REMARKS
55	703–82563–02	.TRIM & TILT SWITCH ASSY	1					WITH PT/T SW.
56	703–48221–00	.LEVER, CONTROL	1					
57	703–48152–00	.KNOB, FREE ACCEL.	1					
58	703–48212–00	.BACK PLATE 1	1					
59	703–48213–00	.BACK PLATE 2	1					
60	703–48271–00	.ARM, SHIFT	1					
61	703–48211–01	.HOUSING,1	1					
62	703–48232–00	.GEAR	1					
63	703–82542–00	.CAP	1					
64	703–48218–00	.GRAPHIC	1					

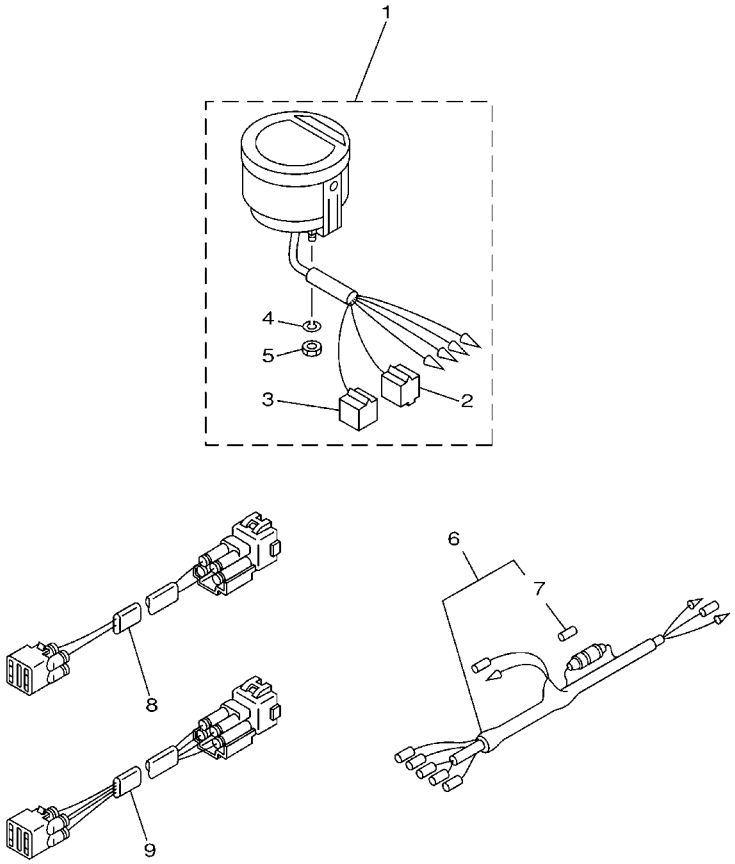

60C1200-1300

FIG. 34 METER

REF. NO.	PART NO.	DESCRIPTION	60D4					REMARKS
1	6Y5–8350T–03	TACHOMETER ASSY	1					AP
2	9E450–04433	.CONNECTOR	1					M-4-W
3	9E450–04533	.CONNECTOR	1					F-4-W
4	92990–04100	.WASHER, SPRING	2					
5	95380–04600	.NUT	2					
6	6Y5–83553–00	WIRE, LEAD	1					AP
7	1E6–82151–00	.FUSE (10A)	1					
8	6R3–82521–70	WIRE, LEAD	1					AP 7M
9	6R3–82553–70	EXTENSION, WIRE LEAD	1					AP 4P,7M

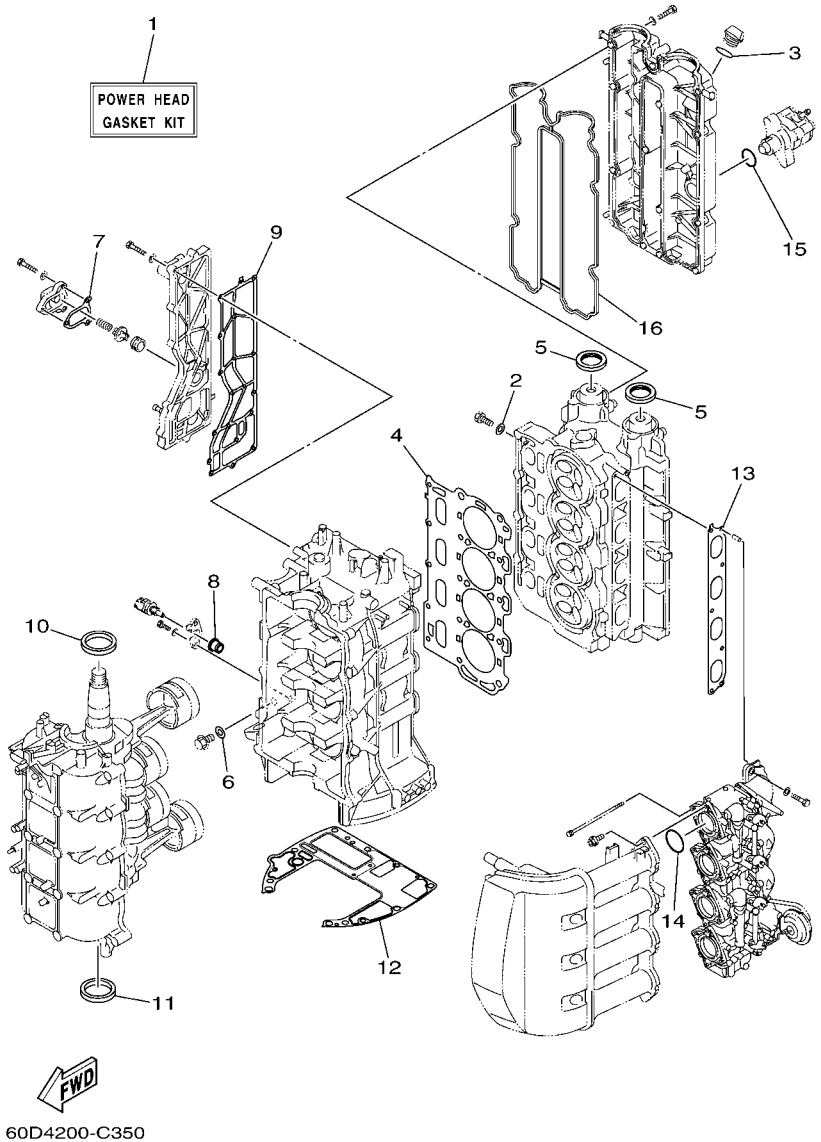

*1: NEW PARTS
STARTING SERIAL NO. : 60D-1000187 ~

FIG. 35 REPAIR KIT 1

REF. NO.	PART NO.	DESCRIPTION	60D4					REMARKS
1	60C–W0001–01	POWER HEAD GASKET KIT	1					
	60C–W0001–02	POWER HEAD GASKET KIT	1					NEW PARTS *1
2	90430–08143	.GASKET	4					
3	93210–24M79	.O-RING	1					
4	67F–11181–02	.GASKET, CYLINDER HEAD 1	1					
5	93102–38M59	.OIL SEAL	2					
6	90430–14115	.GASKET	1					
7	67F–12435–A0	.GASKET	1					
8	68V–85753–00	.GASKET, SENDER UNIT	1					
9	67F–41114–A0	.GASKET, EXHAUST OUTER COVER	1					
	67F–41114–A1	.GASKET, EXHAUST OUTER COVER	1					NEW PARTS *1
10	93102–48008	.OIL SEAL	1					
11	93101–48001	.OIL SEAL	1					
12	68V–11351–00	.GASKET, CYLINDER	1					
13	67F–13645–00	.GASKET, MANIFOLD 1	1					
14	93210–41MJ2	.O-RING	4					
15	93210–30682	.O-RING	1					
16	67F–11356–00	.SEAL, CYLINDER 2	1					

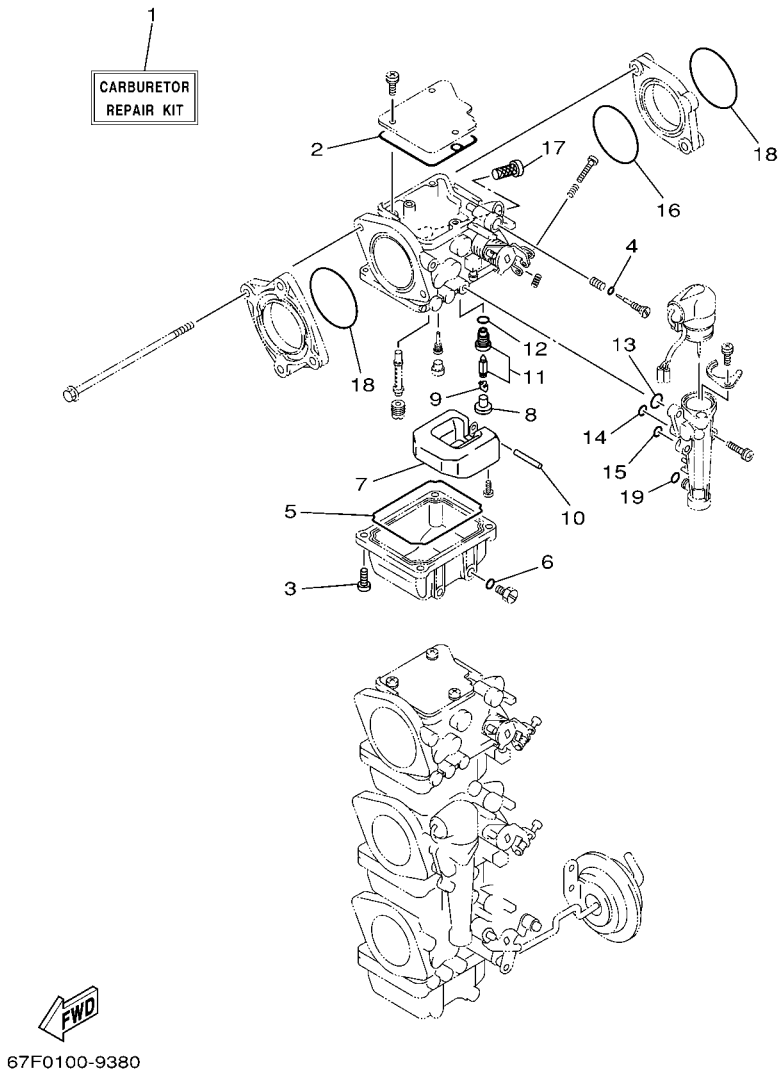

FIG. 36 REPAIR KIT 2

REF. NO.	PART NO.	DESCRIPTION	60D4					REMARKS
1	67F–W0093–01	CARBURETOR REPAIR KIT	1					
2	67F–14147–00	.O-RING	1					
3	97980–04114	.SCREW, WITH WASHER	4					
4	67F–14397–00	.O-RING	1					
5	67F–14984–00	.GASKET, FLOAT CHAMBER	1					
6	93210–04230	.O-RING	1					
7	6H4–14985–01	.FLOAT	1					
8	676–14186–00	.PIN, FLOAT	1					
9	67F–14159–00	.CLIP	1					
10	6H4–14548–00	.PIN, FLOAT ARM	1					
11	60C–14590–01	.NEEDLE VALVE ASSY	1					
12	93210–04228	.O-RING	1					
13	67F–14398–00	.O-RING	1					
14	67F–14398–10	.O-RING	1					
15	67F–14398–20	.O-RING	1					
16	67F–14239–00	.SEAL	1					
17	67F–14371–01	.ELEMENT, FILTER	1					
18	93210–40M10	.O-RING	2					
19	67F–14398–30	.O-RING	1					

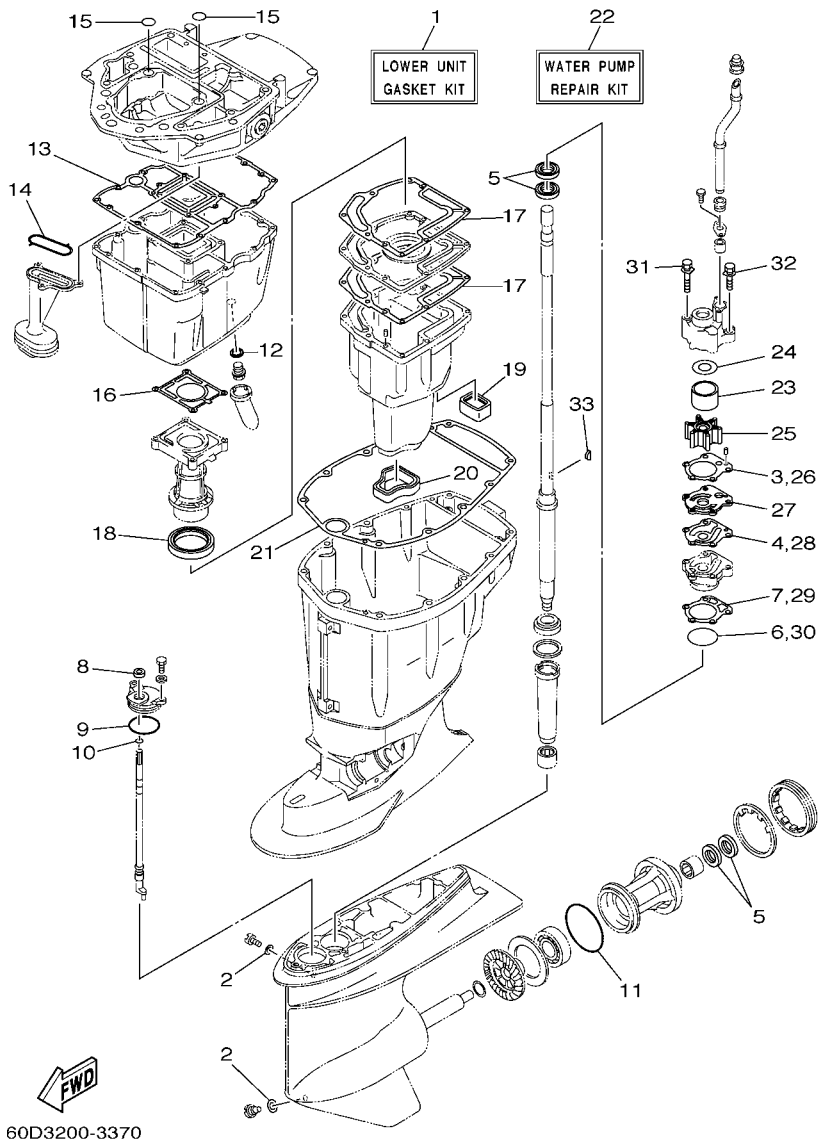

FIG. 37 REPAIR KIT 3

REF. NO.	PART NO.	DESCRIPTION	60D4					REMARKS
1	67F–W0001–21	LOWER UNIT GASKET KIT	1					
2	90430–08020	.GASKET	2					
3	688–44315–A0	.GASKET, WATER PUMP	1					
4	688–44324–A0	.GASKET, CARTRIDGE	1					
5	93101–25M03	.OIL SEAL	4					
6	93210–46044	.O-RING	1					
7	688–44316–A0	.GASKET, WATER PUMP	1					
8	93106–09014	.OIL SEAL	1					
9	93210–49046	.O-RING	1					
10	93210–07003	.O-RING	1					
11	93210–86M39	.O-RING	1					
12	90430–14M09	.GASKET	1					
13	68V–15312–00	.GASKET, OIL PAN	1					
14	67F–13415–00	.SEAL, OIL STRAINER	1					
15	93210–19MJ1	.O-RING	2					
16	67F–41133–A1	.GASKET, EXHAUST MANIFOLD 1	1					
17	67F–41134–A0	.GASKET, EXHAUST MANIFOLD	2					
18	67F–41138–00	.SEAL, EXT. 1	1					
19	67F–45127–00	.SEAL	1					
20	67F–45123–00	.GASKET, MUFFLER	1					
21	67F–45113–00	.GASKET, UPPER CASING	1					
22	60D–W0078–00	WATER PUMP REPAIR KIT	1					
23	60D–44322–40	.INSERT, CARTRIDGE	1					
24	688–44321–41	.INNER PLATE, CARTRIDGE	1					
25	67F–44352–00	.IMPELLER	1					
26	688–44315–A0	.GASKET, WATER PUMP	1					
27	60D–44323–40	.OUTER PLATE, CARTRIDGE	1					

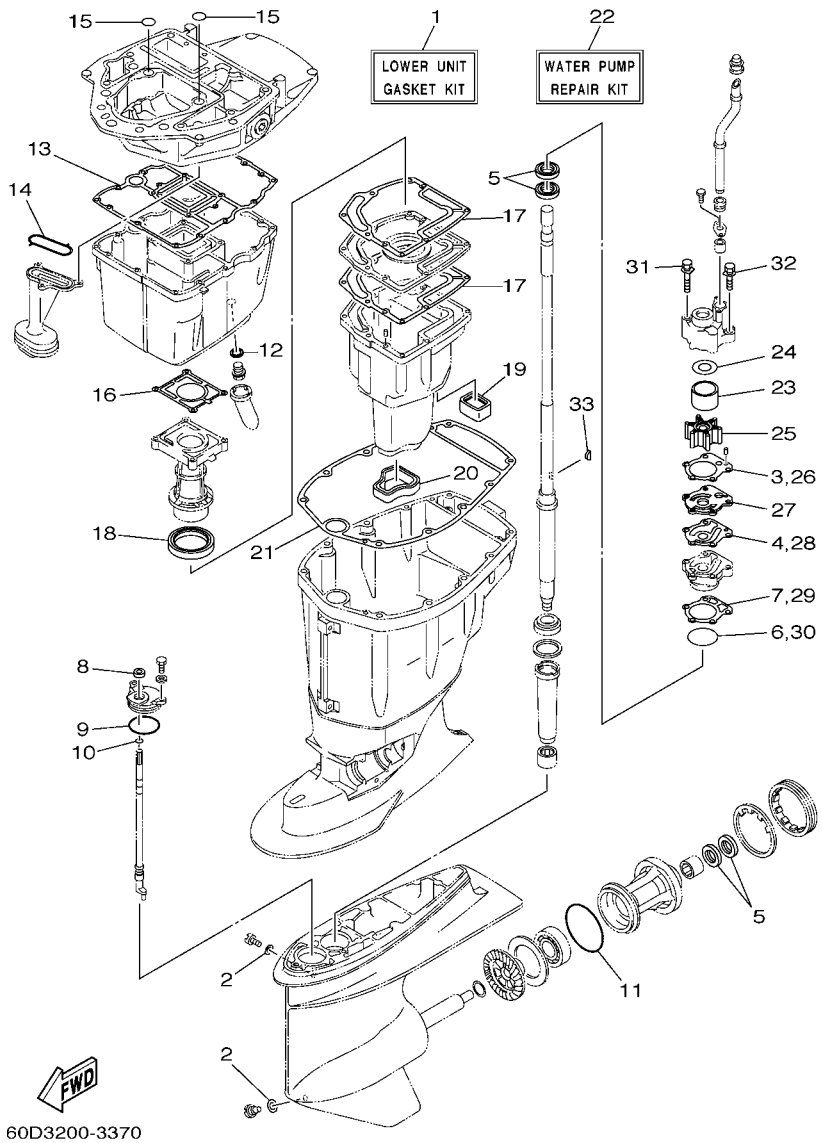

FIG. 37 REPAIR KIT 3

REF. NO.	PART NO.	DESCRIPTION	60D4					REMARKS
28	688–44324–A0	.GASKET, CARTRIDGE	1					
29	688–44316–A0	.GASKET, WATER PUMP	1					
30	93210–46044	.O-RING	1					
31	90119–08M87	.BOLT, WITH WASHER	2					
32	90119–08M13	.BOLT, WITH WASHER	2					
33	90280–04M04	.KEY, WOODRUFF	1					

PART NO.	REF. NO.
67F–11110–11–94	4 – 2
62Y–11119–00	2 – 8
67F–11133–10	4 – 3
67F–11168–00	4 – 22
67F–11181–02	4 – 17
	35 – 4
68V–11191–00–1S	4 – 21
67F–11192–00	4 – 29
68V–11325–00	2 – 26
	4 – 8
6E5–11325–00	2 – 13
67F–11327–00–94	2 – 27
	4 – 9
67F–11328–00	2 – 30
	4 – 12
68V–11351–00	2 – 36
	35 – 12
67F–11356–00	4 – 26
	35 – 16
67F–11411–00	3 – 1
67F–11416–00	3 – 4
67F–11416–10	3 – 4
67F–11416–20	3 – 4
67F–11417–00	3 – 5
67F–11417–10	3 – 5
67F–11417–20	3 – 5
67F–11417–30	3 – 5
67F–11418–00	3 – 6
67F–11418–10	3 – 6
67F–11418–20	3 – 6
67F–11536–00	5 – 23
67F–11537–00	5 – 14
67F–11590–00	5 – 18
67F–11595–00	5 – 21
60C–11603–00	3 – 9
60C–11604–00	3 – 9
67F–11654–00	3 – 8
67F–11656–00	3 – 10
67F–11656–10	3 – 10
67F–11656–20	3 – 10
67F–11656–30	3 – 10
68V–12111–00	5 – 1
67F–12114–00	5 – 4
67F–12116–00	5 – 3
67F–12117–00	5 – 5
67F–12118–00	5 – 6
68V–12121–00	5 – 2
67F–12138–60	10 – 24

PART NO.	REF. NO.
67F–12153–00	5 – 9
67F–12168–00	5 – 10
67F–12168–10	5 – 10
67F–12168–20	5 – 10
67F–12168–30	5 – 10
67F–12168–40	5 – 10
67F–12168–50	5 – 10
67F–12168–60	5 – 10
67F–12168–70	5 – 10
67F–12168–80	5 – 10
67F–12168–A0	5 – 10
67F–12168–B0	5 – 10
67F–12168–C0	5 – 10
67F–12168–D0	5 – 10
67F–12168–E0	5 – 10
67F–12168–F0	5 – 10
67F–12168–G0	5 – 10
67F–12168–H0	5 – 10
67F–12168–J0	5 – 10
67F–12168–K0	5 – 10
67F–12168–L0	5 – 10
67F–12168–M0	5 – 10
67F–12168–N0	5 – 10
67F–12168–P0	5 – 10
67F–12168–R0	5 – 10
67F–12168–S0	5 – 10
67F–12168–T0	5 – 10
67F–12168–U0	5 – 10
67F–12168–V0	5 – 10
67F–12168–W0	5 – 10
67F–12168–X0	5 – 10
67F–12168–Y0	5 – 10
67F–12169–00	5 – 10
67F–12169–10	5 – 10
67F–12169–20	5 – 10
67F–12169–30	5 – 10
67F–12169–40	5 – 10
67F–12169–50	5 – 10
67F–12169–60	5 – 10
67F–12169–70	5 – 10
67F–12169–80	5 – 10
67F–12169–A0	5 – 10
67F–12169–B0	5 – 10
67F–12169–C0	5 – 10
67F–12169–D0	5 – 10
67F–12169–E0	5 – 10
67F–12169–F0	5 – 10
67F–12169–G0	5 – 10

PART NO.	REF. NO.
67F–12169–H0	5 – 10
67F–12169–J0	5 – 10
67F–12169–K0	5 – 10
67F–12169–L0	5 – 10
67F–12169–M0	5 – 10
67F–12169–N0	5 – 10
67F–12171–00	5 – 11
67F–12181–00	5 – 12
68V–12411–00	4 – 31
68V–12413–00–1S	4 – 32
6G5–12416–00	2 – 20
67F–12435–A0	2 – 24
	35 – 7
67F–1243A–00	2 – 33
67F–1246A–00–1S	2 – 23
67F–13119–01	27 – 19
68V–13131–00	9 – 19
67F–13149–00	27 – 23
67F–13183–00	8 – 2
67F–13300–10	27 – 14
67F–13314–02	27 – 15
67F–13329–00	27 – 17
67F–13338–00	27 – 25
67F–13339–00	27 – 24
67F–13411–00	27 – 9
67F–13415–00	27 – 13
	37 – 14
67F–13434–02	1 – 20
68V–13437–60	10 – 25
5GH–13440–00	2 – 41
67F–13448–00	2 – 44
67F–13473–01	27 – 16
67F–13495–00	27 – 18
67F–13631–03	27 – 22
67F–13641–00–94	6 – 6
67F–13645–00	6 – 12
	35 – 13
67F–13769–00	27 – 20
67F–13914–00	27 – 21
67F–1412A–00	8 – 1
67F–14146–00	7 – 6
67F–14147–00	7 – 7
	36 – 2
67F–14159–00	7 – 29
	36 – 9
67F–14178–00	7 – 36
676–14186–00	7 – 28
	36 – 8

PART NO.	REF. NO.
67F–14189–00	8 – 11
67F–14216–00	6 – 2
67F–14239–00	6 – 3
	36 – 16
67F–14243–00	6 – 1
67F–14271–00	6 – 4
60C–14294–00	8 – 15
60C–14298–00	8 – 16
67F–14325–00	7 – 43
67F–14349–00	8 – 3
67F–14349–10	8 – 4
67F–14349–20	8 – 5
67F–14349–30	8 – 6
67F–14349–40	8 – 7
67F–14349–50	8 – 8
67F–14349–60	8 – 9
67F–14349–70	8 – 12
67F–14369–00	7 – 42
67F–14371–01	7 – 44
	36 – 17
67F–14378–00	7 – 34
67F–14380–01	7 – 35
67F–14397–00	7 – 20
	36 – 4
67F–14398–00	7 – 38
	36 – 13
67F–14398–10	7 – 40
	36 – 14
67F–14398–20	7 – 41
	36 – 15
67F–14398–30	7 – 45
	36 – 19
67F–14440–00	6 – 19
63V–14523–00	7 – 17
6H4–14548–00	7 – 30
	36 – 10
67F–14555–00	7 – 15
697–14555–00	7 – 5
67F–14556–00	7 – 16
67F–14565–00	7 – 39
67F–14567–00	7 – 14
6K7–14573–00	13 – 17
6H2–14578–00	7 – 21
67F–14585–00	8 – 10
60C–14590–01	7 – 32
	36 – 11
67F–14592–00	7 – 37
60D–14711–00–5B	26 – 11

PART NO.	REF. NO.
60C–14901–00	7 – 1
60C–14902–00	7 – 2
60C–14904–00	7 – 3
67F–14923–00	7 – 4
67F–14943–83	7 – 13
67F–14947–00	7 – 12
67F–14948–04	7 – 11
676–14966–00	7 – 9
67F–14980–00	7 – 22
67F–14980–10	7 – 23
67F–14984–00	7 – 24
	36 – 5
6H4–14985–01	7 – 27
	36 – 7
6H3–14992–00	7 – 25
67F–14998–00	7 – 19
67F–15100–03–1S	2 – 2
67F–15142–00	2 – 12
67F–15311–01–5B	27 – 1
68V–15312–00	27 – 8
	37 – 13
67F–15316–00	27 – 2
68V–15362–10	27 – 30
6G8–15363–00	4 – 35
67F–15373–00	6 – 13
1UF–22434–00	24 – 41
67F–22435–00	24 – 22
67F–22471–01	24 – 36
68V–24149–00	9 – 26
6YJ–24167–00	30 – 7
6YJ–24201–10	30 – 1
6Y1–24260–12	30 – 3
6Y1–24268–00	30 – 6
6Y2–24305–05	30 – 13
6Y2–24306–44	30 – 8
6Y1–24329–00	30 – 5
6E5–24351–51	30 – 10
68F–24356–00	8 – 14
6Y2–24360–60	30 – 12
63D–24364–00	18 – 20
63D–24367–00	18 – 19
67F–24367–00	16 – 30
68V–24374–00	9 – 22
6R3–24377–00	9 – 2
688–24378–00	8 – 17
68V–24410–00	9 – 16
68V–24411–00	9 – 21
68V–24412–00	9 – 17

PART NO.	REF. NO.
68V–24413–00	9 – 23
68V–24414–00	9 – 24
68V–24423–00	9 – 20
68V–24444–00	9 – 25
68V–24454–00	9 – 18
68V–24469–01	9 – 9
67F–24491–00	9 – 34
68V–24495–00	9 – 31
68V–24521–01	9 – 6
60C–24560–00	9 – 5
61N–24563–00	9 – 7
68V–24566–00	9 – 11
67F–24575–00	9 – 30
6YJ–24610–01	30 – 2
67G–26301–10	17 – 40
67F–28100–01	9 – 37
67F–2812A–00	12 – 23
6A1–28176–00	16 – 40
67F–41113–01–1S	2 – 15
67F–41113–02–1S	2 – 15
67F–41114–A0	2 – 16
	35 – 9
67F–41114–A1	2 – 16
	35 – 9
60C–41131–01–5B	26 – 7
67F–41133–A1	26 – 8
	37 – 16
67F–41134–A0	26 – 17
	37 – 17
67F–41137–02–94	26 – 3
67F–41138–00	26 – 19
	37 – 18
67F–41213–01	20 – 41
67F–41237–00	20 – 38
682–41237–00	20 – 39
67F–41661–00–94	20 – 35
67G–42111–00–4D	17 – 2
67G–42115–00	17 – 18
664–42119–00	17 – 3
68V–42121–00–4D	17 – 64
63D–42121–30–4D	17 – 56
63D–42126–00	17 – 11
67G–42131–00	17 – 50
6H2–42137–00	17 – 5
650–42152–00–94	17 – 19
67G–42153–00	17 – 25
67F–42154–00–94	20 – 26
67G–42159–00	17 – 21

PART NO.	REF. NO.
6G1–42177–00	17 – 4
67G–42508–00	19 – 1
67F–42510–10–4D	22 – 9
67G–42526–00	19 – 11
63D–42527–00	19 – 6
63D–42528–00	19 – 17
67G–42541–00	19 – 4
67G–42541–10	19 – 7
624–42542–00	11 – 3
67G–42546–00	19 – 5
67G–42561–00	19 – 15
67G–42562–00	19 – 16
67F–42610–10–4D	1 – 1
67F–42613–00–4D	1 – 10
67F–42615–00	1 – 13
61N–42628–00	1 – 12
67F–42628–00	1 – 19
67F–42647–00	1 – 2
67F–42649–00	1 – 8
67F–42652–00	1 – 5
67F–42662–00	1 – 9
67F–42677–10	1 – 14
67F–42678–10	1 – 15
67F–42681–10	1 – 17
67F–42682–10	1 – 18
67F–42710–01–4D	16 – 1
648–42715–00	20 – 23
61A–42716–00	16 – 32
67F–42717–00	16 – 25
67F–42724–00	26 – 2
63D–42725–00	17 – 55
68V–42725–10	16 – 19
688–42726–10	16 – 22
6G1–42727–00	26 – 6
67G–42735–00	18 – 3
67F–42738–00–5B	16 – 17
67F–42741–00–4D	16 – 33
6H4–42748–00	16 – 24
67F–42756–00	16 – 20
67F–42761–00–94	2 – 37
67F–42815–00–4D	16 – 5
67F–42816–00–4D	16 – 6
67F–42818–00	16 – 9
67F–42828–00–5B	16 – 7
67F–43111–00–4D	21 – 1
67F–43112–00–4D	21 – 4
67F–43126–00	21 – 28
64E–43131–01	21 – 12

PART NO.	REF. NO.
64E–43139–02	22 – 5
64D–43144–00	16 – 14
66T–43144–00	21 – 22
6E5–43145–01	31 – 8
67F–43181–00	21 – 18
67F–43311–10–4D	21 – 7
682–43318–01	19 – 8
67F–43631–00	21 – 20
67F–43800–03–4D	24 – 1
67F–43802–00	24 – 49
67F–43804–00	25 – 3
67F–43805–00	25 – 2
67F–43808–00	24 – 63
67F–4380F–00	25 – 7
67F–4380K–00	24 – 3
67F–4380R–00	24 – 8
67F–43810–01	24 – 4
6H1–43812–00	24 – 13
67F–43816–00	24 – 29
6H1–43816–00	24 – 60
65W–43817–00	24 – 83
67F–43817–00	24 – 52
67F–43818–00	21 – 32
67F–4381B–00	24 – 38
67F–4381J–00	24 – 35
67F–43821–00	24 – 5
67F–43825–03	24 – 58
6H1–43829–00	24 – 44
67F–4382F–00	24 – 50
67F–4382G–00	24 – 64
67F–43830–00	24 – 78
6H1–43831–10	24 – 48
67F–43840–02	24 – 2
62X–43841–00	24 – 56
67F–43843–00	24 – 89
6H1–43844–10	24 – 80
61A–43845–00	24 – 70
61A–43847–00	24 – 75
61A–43848–00	24 – 68
6H1–4384F–10	24 – 79
62X–4384H–00	24 – 40
67F–43850–00	24 – 85
67F–43851–00	24 – 61
65W–43853–00	24 – 19
61A–43854–00	24 – 69
6H1–43856–10	24 – 81
	24 – 87
67F–43857–00	24 – 34

PART NO.	REF. NO.
67F–4385A–01	24 – 11
67F–4385H–00	24 – 84
61A–43860–20	24 – 67
65W–43861–00	24 – 82
67F–43861–00	24 – 14
62X–43862–00	24 – 15
65W–43862–00	24 – 76
67F–43862–00	24 – 30
67F–43863–00	24 – 27
62X–43865–00	24 – 31
	24 – 55
6H1–43866–00	24 – 51
6H1–43867–00	24 – 54
65W–4386A–00	24 – 17
67F–4386A–00	24 – 90
6T4–4386A–00	24 – 33
688–4386F–00	24 – 18
67F–4386K–00	25 – 6
62X–43871–00	24 – 24
67F–43871–00	24 – 43
6H1–43872–10	24 – 6
	24 – 9
61A–43875–00	24 – 71
62X–43875–00	24 – 42
67F–43875–00	24 – 37
6H1–43875–00	24 – 73
62X–43878–00	24 – 59
67F–43879–00	25 – 12
67F–4387G–00	25 – 13
67F–4387J–00	25 – 14
67F–43880–00	24 – 91
	25 – 1
67F–43881–00	25 – 9
67F–43882–00	25 – 10
67F–43886–00	25 – 8
65W–43888–00	24 – 57
67F–4388A–00	24 – 32
67F–43891–00	25 – 4
67F–43893–00	24 – 20
67F–43895–00	24 – 88
67F–43896–00	25 – 11
62X–43899–00	24 – 39
67F–43899–00	24 – 28
67G–44100–00	17 – 15
67G–44104–00	17 – 16
67G–44113–00	17 – 22
67F–44117–00	20 – 5
67F–44118–00	20 – 18

PART NO.	REF. NO.
67F–44120–10	20 – 14
67F–44121–00	20 – 11
688–44122–00	20 – 8
67G–44132–00	17 – 26
67F–44135–00	20 – 42
67F–44150–00	28 – 40
67G–44159–00–4D	17 – 45
67G–44173–00	17 – 46
6G8–44191–00	17 – 48
67F–44311–00	28 – 17
688–44315–A0	28 – 28
	37 – 3
	37 – 26
688–44316–A0	28 – 34
	37 – 7
	37 – 29
688–44321–41	28 – 25
	37 – 24
60D–44322–40	28 – 24
	37 – 23
60D–44323–40	28 – 29
	37 – 27
688–44324–A0	28 – 30
	37 – 4
	37 – 28
688–44341–01–94	28 – 31
67F–44352–00	28 – 26
	37 – 25
67F–44361–10	29 – 2
67F–44365–00	29 – 3
663–44366–00	28 – 21
663–44367–00	29 – 1
6H3–44391–01	16 – 23
67F–44514–00–94	22 – 17
67F–44526–00	22 – 20
6H1–44526–00	21 – 39
67F–44533–00	22 – 23
68F–44533–00	2 – 40
67F–44551–00–4D	22 – 15
67F–44553–00–4D	22 – 34
67F–44555–00–94	22 – 25
67F–44575–00	22 – 33
67F–45111–10–4D	26 – 22
67F–45113–00	26 – 31
	37 – 21
67F–45123–00	26 – 21
	37 – 20
67F–45127–00	26 – 20

PART NO.	REF. NO.
67F–45127–00	37 – 19
67F–45151–00	26 – 27
67F–45155–00	26 – 30
67F–45180–00–4D	23 – 1
67F–45181–00–5B	26 – 18
6H1–45214–00	29 – 9
6H1–45215–00	29 – 10
6H1–45251–03	21 – 37
60D–45300–10–4D	28 – 1
67F–45301–00–4D	28 – 2
67F–45318–00	26 – 25
688–45321–00	28 – 35
67F–45331–00–94	28 – 61
688–45341–10	28 – 4
67F–45371–00	29 – 13
688–45375–00	29 – 17
663–45376–00–94	29 – 18
6E5–45378–00	28 – 6
688–45383–02	28 – 67
688–45384–00	28 – 68
67F–45501–10	28 – 10
688–45536–01	28 – 14
67F–45551–00	28 – 11
67F–45560–00	28 – 53
688–45567–01–10	28 – 56
688–45567–01–12	28 – 56
688–45567–01–15	28 – 56
688–45567–01–18	28 – 56
688–45567–01–30	28 – 56
688–45567–01–40	28 – 56
688–45567–01–50	28 – 56
67F–45571–00	28 – 57
67F–45576–00	28 – 65
688–45587–01–10	28 – 16
688–45587–01–12	28 – 16
688–45587–01–15	28 – 16
688–45587–01–18	28 – 16
688–45587–01–30	28 – 16
688–45587–01–40	28 – 16
688–45587–01–50	28 – 16
67F–45611–01	28 – 60
67F–45631–00	28 – 50
688–45633–00	28 – 52
67F–45634–00	28 – 44
6H1–45635–00	28 – 46
6H1–45668–00	28 – 45
688–45930–02–98	29 – 24
688–45932–60–98	29 – 24

PART NO.	REF. NO.
6E5–45941–00–EL	29 – 24
6E5–45943–00–EL	29 – 24
6E5–45945–01–EL	29 – 24
6E5–45947–00–EL	29 – 24
6E5–45949–00–EL	29 – 24
6E5–45952–00–EL	29 – 24
6E5–45954–00–EL	29 – 24
6E5–45956–00–EL	29 – 24
688–45970–03–98	29 – 24
688–45972–02–98	29 – 24
688–45974–02–98	29 – 24
688–45976–01–98	29 – 24
688–45978–60–98	29 – 24
688–45987–01	29 – 19
67F–45997–00	29 – 20
67F–46241–00	5 – 17
63D–48119–00	17 – 24
703–48152–00	33 – 57
703–48153–00	33 – 3
63D–48154–00	17 – 12
703–48189–00	33 – 17
703–48198–00	33 – 14
703–48205–A4	32 – 1
	33 – 1
703–48211–01	33 – 61
703–48212–00	33 – 58
703–48213–00	33 – 59
703–48215–00	33 – 43
703–48218–00	33 – 64
703–48219–00	33 – 30
703–48221–00	33 – 56
703–48222–00	33 – 27
703–48223–00	33 – 28
703–48225–00	33 – 29
703–48226–00	33 – 26
703–48227–00	33 – 24
703–48232–00	33 – 62
703–48234–00	33 – 18
703–48235–00	33 – 4
63D–48236–00	17 – 23
703–48236–00	33 – 16
63D–48237–00	17 – 27
63D–48238–00	17 – 29
703–48238–00	33 – 22
703–48243–00	33 – 15
703–48244–00	33 – 21
703–48245–00	33 – 11
703–48246–00	33 – 23

PART NO.	REF. NO.
701–48248–00	33 – 13
703–48252–00	33 – 12
67G–48261–00	17 – 17
703–48261–01	33 – 2
703–48264–00	33 – 6
703–48265–00	33 – 9
703–48268–00	33 – 5
703–48271–00	33 – 60
703–48281–00	33 – 31
703–48282–00	33 – 32
703–48284–00	33 – 52
701–48287–00	33 – 42
703–48291–10	33 – 39
703–48293–10	33 – 41
701–48320–70	32 – 2
67G–48321–10	17 – 36
663–48344–00	20 – 3
	20 – 24
703–48345–01	33 – 19
703–48358–00	33 – 20
67F–48511–00–4D	22 – 37
67G–48531–00	17 – 37
63D–48538–00	17 – 43
66R–48538–00	17 – 41
67F–48538–00	20 – 1
67F–61350–00	31 – 1
66T–81328–00	10 – 8
445–81328–20	10 – 7
67F–8132G–01	13 – 1
67F–81332–00	10 – 17
67F–81337–01	10 – 20
63D–81345–20	10 – 5
67F–81673–00	10 – 9
67F–81800–02	15 – 1
67F–81801–00	15 – 5
67F–81807–00	15 – 10
67F–81808–00	15 – 8
67F–81809–00	15 – 19
67F–81810–00	15 – 3
67F–81813–00	15 – 6
67F–81820–00	15 – 7
67F–81821–00	15 – 13
6K7–81826–10	15 – 24
67F–81828–00	15 – 25
67F–81830–00	15 – 17
67F–81832–00	15 – 11
67F–81836–00	15 – 12
67F–81839–00	15 – 21

PART NO.	REF. NO.
67F–8183R–00	15 – 16
67F–8183T–00	15 – 18
67F–81840–00	15 – 4
67F–81841–00	15 – 14
67F–81842–00	15 – 20
67F–81846–00	15 – 26
67F–81850–00	15 – 2
67F–81857–00	15 – 9
67F–81869–00	15 – 23
67F–81891–00	15 – 15
60C–81916–00	12 – 35
67F–81919–00	12 – 38
67F–81941–01	15 – 22
67F–81942–00	12 – 22
67F–81948–00	12 – 19
6G1–8194A–10	12 – 3
6G1–81952–00	12 – 6
67F–81953–00	12 – 16
6E5–8195B–01	12 – 7
6E5–8195C–01	12 – 10
67F–81960–11	11 – 23
67F–82105–00	12 – 2
67F–82116–00	12 – 15
6G5–82119–00	12 – 14
703–82119–00	22 – 3
682–82119–01	12 – 1
67F–82127–00	21 – 11
67F–82148–00	21 – 25
6E5–82148–00	21 – 5
1E6–82151–00	34 – 7
67F–82151–00	12 – 25
67F–82151–10	12 – 26
67F–8215B–00	12 – 27
67F–82181–00	25 – 5
68V–82317–00	11 – 2
67F–82341–00	11 – 15
67F–82342–00	11 – 16
67F–82343–00	11 – 19
67F–82344–00	11 – 20
67F–82361–00	11 – 17
	11 – 21
67F–82362–00	11 – 18
	11 – 22
67F–82377–00	16 – 39
68V–82504–00	13 – 25
703–82510–12	33 – 44
67G–82510–41	18 – 9
6R3–82521–70	34 – 8

PART NO.	REF. NO.
63D–8252F–01–4D	18 – 18
703–82531–00	33 – 46
703–82540–00	33 – 50
688–82540–11	18 – 4
703–82542–00	33 – 63
6R3–82553–70	34 – 9
67G–82554–01	18 – 5
62Y–82555–00	18 – 6
682–82556–00	18 – 28
	33 – 48
67G–82563–00	18 – 31
703–82563–02	33 – 55
63D–82563–10	13 – 26
67G–82568–00–4D	18 – 16
69W–82575–00	18 – 27
688–82575–01	33 – 47
676–82577–00	18 – 10
	33 – 45
6E3–8257H–00	16 – 41
689–8257Y–00	18 – 29
60C–82586–00	14 – 3
6E5–82587–00	13 – 27
67F–82588–00	12 – 31
6E5–82588–00	16 – 26
688–8258A–20	33 – 49
67F–82590–03	12 – 24
703–82591–00	33 – 53
703–82592–00	33 – 54
703–82594–00	33 – 25
703–83383–A0	33 – 51
6Y5–83504–20	14 – 1
6Y5–8350T–03	34 – 1
6Y5–83553–00	34 – 6
6K3–83557–00	18 – 2
6E5–83558–00	29 – 16
6E5–83558–10	28 – 8
6H4–83589–00	18 – 15
67F–83614–00	13 – 28
6A1–83625–41	10 – 26
6A1–83625–51	10 – 27
67F–83626–00	12 – 37
67F–83635–00	13 – 18
64E–83672–02	22 – 1
63D–83728–00	18 – 34
67G–84301–00	18 – 12
60C–8431R–00	14 – 5
67G–85415–00	18 – 17
67F–85510–01	10 – 4

PART NO.	REF. NO.
663–85518–00	20 – 27
67F–85540–03	11 – 1
689–85547–00	9 – 1
67F–85550–00	10 – 1
67F–85560–01	10 – 2
67F–85570–00	11 – 5
67F–85580–00	10 – 3
68V–85753–00	13 – 6
	35 – 8
67F–85757–00	13 – 5
67F–85790–00	13 – 4
61A–85885–00	13 – 12
66T–87149–00	12 – 13
K0A–A3721–00	5 – 7
K0A–A3722–00	5 – 8
60C–W0001–01	35 – 1
60C–W0001–02	35 – 1
67F–W0001–21	37 – 1
67F–W0070–10	1 – 16
60D–W0078–00	37 – 22
67G–W0084–02–4D	17 – 1
67F–W0093–01	36 – 1
60C–W009A–02–1S	4 – 1
60C–W009B–01–1S	2 – 1
60C–W009B–02–1S	2 – 1
60C–W1164–00	3 – 7
60C–W1164–10	3 – 7
90101–09M01	31 – 7
90101–12M03	21 – 43
90101–12M09	17 – 57
90105–10M67	29 – 14
90105–10M89	4 – 19
90109–06M80	16 – 36
90109–06M81	16 – 27
	18 – 37
90109–06M82	16 – 8
	16 – 31
90109–06M86	13 – 29
	16 – 15
	16 – 21
	16 – 29
	20 – 2
90109–06M96	16 – 18
90109–12M37	22 – 19
90109–12M97	22 – 27
90110–12M00	23 – 4
90116–10175	17 – 65
	22 – 38

PART NO.	REF. NO.
90119–06M59	11 – 4
90119–06M81	21 – 38
90119–06M82	6 – 20
90119–06M83	9 – 29
90119–06M92	10 – 23
90119–06MA2	2 – 25
90119–06MA4	2 – 17
90119–07234	4 – 7
90119–07235	4 – 5
	9 – 35
90119–08M13	28 – 20
	37 – 32
90119–08M22	16 – 2
90119–08M58	26 – 1
90119–08M59	6 – 22
90119–08M66	2 – 5
90119–08M74	19 – 2
90119–08M84	29 – 8
90119–08M87	28 – 19
	37 – 31
90119–08M91	4 – 20
90119–10M06	5 – 15
90119–10M08	26 – 23
90119–10M72	5 – 22
90119–10M88	2 – 4
90149–05M13	17 – 7
90151–05M00	29 – 11
90159–06M18	17 – 47
90159–06M28	16 – 35
90159–06M29	4 – 30
	12 – 36
90167–05009	14 – 2
90170–06M30	12 – 4
	12 – 8
	12 – 11
90170–09M03	31 – 4
90170–16M01	28 – 12
90170–40003	5 – 24
90171–16011	29 – 22
90179–06M24	1 – 11
90179–24002	10 – 16
90183–02M03	28 – 49
90185–05002	29 – 12
90185–08057	19 – 14
90185–09M01	31 – 3
90185–10051	17 – 66
	22 – 39
90185–10M14	19 – 9

PART NO.	REF. NO.
90185–12M12	17 – 63
90185–22M11	21 – 15
90201–03313	28 – 48
90201–05M03	13 – 21
90201–06068	16 – 12
	20 – 29
90201–06M31	20 – 46
90201–08M01	19 – 3
90201–08M12	9 – 33
90201–09M02	20 – 16
90201–10M02	20 – 45
90201–10M20	31 – 2
90201–10M63	31 – 6
90201–10M76	19 – 10
90201–12M01	23 – 2
90201–12M05	21 – 45
90201–12M16	22 – 21
	22 – 28
	23 – 5
90201–13M01	21 – 44
	22 – 22
90201–13M03	22 – 26
90201–13M19	22 – 31
90201–24014	10 – 15
90201–24M02	22 – 29
90201–25M05	28 – 59
90201–26M59	21 – 14
90201–30M00	22 – 10
90202–07M07	20 – 9
90202–25M04	22 – 30
90204–06M00	12 – 5
	12 – 9
	12 – 12
90206–10M04	20 – 47
90206–12M00	20 – 30
90206–12M22	17 – 59
90206–15M18	16 – 11
90250–07M02	28 – 51
90269–02M09	17 – 6
90280–04008	5 – 25
90280–04M04	28 – 27
	37 – 33
90280–05015	10 – 14
90282–04010	28 – 66
90340–08002	28 – 3
90340–14M06	2 – 6
	27 – 3
90344–51019	4 – 4

PART NO.	REF. NO.
90386–06M12	20 – 12
90386–08032	17 – 10
90386–10M16	21 – 19
90386–12069	20 – 32
90386–12M93	17 – 61
90386–15M73	16 – 10
90386–18M35	21 – 29
90386–18M63	21 – 30
90386–18MA0	21 – 34
90386–25M31	21 – 13
90386–26MA3	17 – 49
90386–30M60	22 – 14
90386–30M77	22 – 13
90386–30M78	22 – 11
90386–90M90	20 – 15
90387–05M00	13 – 19
90387–06M43	16 – 38
90387–06M64	27 – 12
90387–06M71	10 – 21
90387–06M82	20 – 43
90387–08M37	16 – 4
90387–10M08	4 – 18
90387–10M42	31 – 5
90387–12M02	17 – 60
90387–18M01	21 – 33
90387–22M01	21 – 35
90389–25M00	29 – 21
90401–20145	2 – 42
90430–06014	6 – 8
90430–08020	28 – 5
	37 – 2
90430–08143	4 – 16
	35 – 2
90430–14115	2 – 7
	35 – 6
90430–14M09	27 – 4
	37 – 12
90445–07M31	28 – 7
90445–07ME0	29 – 15
90445–10M16	8 – 18
90445–10M40	2 – 18
90445–10MG6	8 – 19
90445–10MG7	8 – 20
90445–13M01	30 – 9
90445–13M11	9 – 15
90445–13M27	9 – 4
90445–13M35	30 – 11
90445–15M03	5 – 20

PART NO.	REF. NO.
90445–16M07	8 – 21
90446–24M79	18 – 1
90464–09M47	13 – 15
	13 – 30
90464–10M57	8 – 22
90465–06M86	11 – 12
	13 – 9
90465–08M23	16 – 28
90465–08M63	21 – 9
	22 – 4
90465–08M83	8 – 23
90465–10M77	21 – 2
90465–11M10	2 – 19
	2 – 34
	2 – 43
	6 – 14
	9 – 3
	9 – 10
	9 – 27
	13 – 11
	13 – 16
	14 – 6
	22 – 7
	22 – 8
	28 – 9
90465–11M59	8 – 13
90465–12M03	6 – 16
90465–13M11	12 – 34
	18 – 11
	18 – 30
90465–13M24	18 – 35
90465–13M30	18 – 36
90467–20M15	2 – 35
	6 – 15
90468–10005	17 – 39
	17 – 44
90468–18008	20 – 4
	20 – 10
	20 – 13
	20 – 25
90480–01008	14 – 4
90480–10M23	13 – 20
90480–12072	2 – 11
	4 – 25
90480–13M24	16 – 37
90480–15M31	10 – 22
90480–19M06	28 – 22
90480–20M05	2 – 22

PART NO.	REF. NO.
90480–22M15	16 – 3
90501–10326	7 – 18
90501–12082	20 – 22
90501–12M48	28 – 47
90501–16M11	2 – 21
90501–23215	17 – 9
90506–14M24	21 – 24
90506–16M34	16 – 16
90506–16M39	5 – 19
91318–06020	24 – 47
91318–06035	24 – 46
91490–20010	17 – 14
91490–20015	20 – 17
91490–40025	29 – 23
91609–25014	9 – 32
91690–30018	20 – 28
91690–30020	21 – 21
91690–30025	17 – 20
91690–50014	6 – 11
91809–08006	4 – 6
	9 – 36
92903–08100	15 – 32
92903–08600	15 – 28
	15 – 30
92903–10600	17 – 8
92907–04600	4 – 24
92907–06600	27 – 11
92990–04100	34 – 4
92990–06100	1 – 3
92990–06600	18 – 14
	26 – 29
92990–08600	33 – 34
92990–12200	17 – 58
92990–12600	17 – 62
	20 – 31
92995–05100	13 – 23
92995–05600	13 – 14
	13 – 24
92995–06100	10 – 12
	11 – 7
	11 – 10
	11 – 25
	11 – 28
	12 – 29
	21 – 41
92995–06600	1 – 7
	2 – 10
	2 – 29

PART NO.	REF. NO.
92995–06600	2 – 39
	4 – 11
	4 – 28
	4 – 34
	6 – 18
	8 – 25
	9 – 14
	10 – 13
	10 – 19
	11 – 8
	11 – 11
	11 – 14
	11 – 26
	11 – 29
	12 – 18
	12 – 21
	12 – 30
	12 – 33
	13 – 3
	13 – 8
	17 – 33
	17 – 35
	17 – 52
	17 – 54
	18 – 8
	18 – 22
	18 – 24
	18 – 26
	18 – 33
	20 – 7
	20 – 20
	20 – 34
	20 – 37
	21 – 27
	21 – 42
	26 – 10
	26 – 13
	26 – 15
	27 – 6
	27 – 27
	28 – 38
92995–08100	21 – 17
	26 – 33
92995–08600	2 – 32
	4 – 14
	6 – 10
	17 – 31
	19 – 13

PART NO.	REF. NO.
92995–10100	22 – 36
	29 – 6
92995–10600	29 – 7
93101–25M03	28 – 32
	28 – 63
	37 – 5
93101–48001	3 – 3
	35 – 11
93102–38M59	5 – 16
	35 – 5
93102–48008	3 – 2
	35 – 10
93106–09014	28 – 36
	37 – 8
93210–04228	7 – 33
	36 – 12
93210–04230	7 – 26
	36 – 6
93210–06100	24 – 72
93210–064A5	24 – 65
93210–07003	24 – 62
	28 – 41
	37 – 10
93210–08287	30 – 14
93210–09165	24 – 45
93210–10M74	24 – 53
93210–11368	24 – 77
93210–16275	31 – 9
93210–18397	24 – 7
	24 – 10
	24 – 74
93210–19MJ1	27 – 29
	37 – 15
93210–24M79	4 – 36
	35 – 3
93210–29375	24 – 23
93210–29M94	22 – 12
93210–30682	9 – 28
	35 – 15
93210–32738	9 – 8
93210–40M10	6 – 5
	36 – 18
93210–41MJ2	6 – 21
	35 – 14
93210–46044	28 – 33
	37 – 6
	37 – 30
93210–49046	28 – 39

PART NO.	REF. NO.
93210–49046	37 – 9
93210–86M39	28 – 64
	37 – 11
93306–207U0	28 – 58
93315–325W4	28 – 13
93317–322V0	28 – 54
93317–325U0	28 – 62
93332–000U3	28 – 15
93332–000UD	28 – 55
93410–18M05	21 – 31
	21 – 36
93410–28M06	22 – 16
93420–36M01	26 – 26
93430–06024	33 – 10
93501–04M02	20 – 21
93501–08001	24 – 12
	24 – 16
	24 – 26
	24 – 86
93503–16003	24 – 25
	28 – 43
93505–32038	24 – 66
93602–07244	24 – 21
93604–10M03	28 – 18
93604–12M07	27 – 28
93605–10108	5 – 13
93606–12019	2 – 3
	27 – 7
	29 – 4
93606–19M23	26 – 16
93608–16M16	26 – 5
	26 – 24
93700–06M03	21 – 8
94702–00391	4 – 37
95333–08600	15 – 31
95380–04600	34 – 5
95380–05600	20 – 40
	33 – 7
95380–06600	1 – 4
	16 – 34
	17 – 13
	33 – 40
95380–08600	9 – 12
95380–12600	21 – 46
95380–12700	22 – 32
	23 – 3
95780–12300	22 – 24
	23 – 6

PART NO.	REF. NO.
97013–08016	15 – 29
97013–08045	15 – 27
97027–06025	27 – 10
97075–06020	2 – 28
	4 – 10
97075–06025	20 – 19
	27 – 5
97075–06030	26 – 12
97075–06050	26 – 14
97075–06070	26 – 9
97075–08025	2 – 31
	4 – 13
97075–08035	6 – 9
97075–10040	22 – 35
	29 – 5
97095–06010	6 – 7
	13 – 10
	21 – 3
	21 – 10
	21 – 23
	21 – 26
97095–06012	1 – 6
	6 – 17
	8 – 24
	11 – 13
	12 – 32
	20 – 33
97095–06014	17 – 34
	17 – 38
	17 – 42
	18 – 7
97095–06016	9 – 13
	12 – 17
	12 – 20
	13 – 2
	13 – 7
	16 – 13
	21 – 40
	28 – 37
97095–06020	2 – 9
	11 – 9
	11 – 27
	12 – 28
	18 – 23
97095–06025	2 – 38
	4 – 33
	11 – 24
	18 – 21

PART NO.	REF. NO.
97095–06025	20 – 36
97095–06030	4 – 27
	10 – 11
	11 – 6
	17 – 32
	18 – 25
97095–06035	20 – 44
97095–06040	20 – 6
97095–06045	27 – 26
97095–08014	4 – 15
97095–08016	26 – 32
97095–08020	21 – 16
97095–08025	19 – 12
97095–08040	17 – 30
97380–05025	33 – 8
97380–08030	33 – 33
97575–08445	22 – 18
97575–08540	26 – 4
97607–04110	10 – 6
97780–40512	28 – 23
97780–60525	22 – 6
97803–04010	7 – 8
97880–06012	18 – 13
	21 – 6
97880–06016	26 – 28
97885–05010	13 – 13
97885–05025	13 – 22
97885–06010	10 – 18
97885–06016	17 – 53
	18 – 32
	22 – 2
97885–06040	17 – 51
97980–04114	7 – 10
	36 – 3
98507–04008	4 – 23
98580–03015	33 – 38
98580–04006	33 – 36
98580–04008	7 – 31
98580–04010	33 – 35
98580–05010	33 – 37
98586–05016	30 – 4
98780–04016	2 – 14
98785–05014	17 – 28
99001–08600	28 – 42
99530–08012	10 – 10
9E450–04433	34 – 2
9E450–04533	34 – 3

F100CET
PARTS CATALOGUE
©2003 by Yamaha Motor Co., Ltd.
1st edition, December 2003
All rights reserved.
Any reprinting or unauthorized use
without the written permission of
Yamaha Motor Co., Ltd.
is expressly prohibited.
Printed in Japan.