YAMAHA

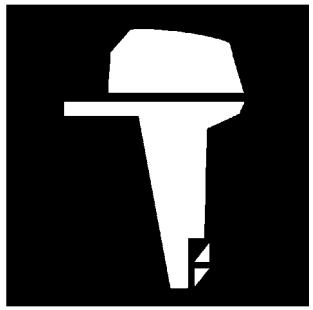

PARTS CATALOGUE

F150TRC (63P1)
LF150TRC (64P1)
F150AET'04 (63P1)
FL150AET'04 (64P1)

1C63P-100E1

(2C63P-100E1)

YAMAHA
GENUINE
Parts & Accessories

FOREWORD

This Parts Catalogue is related to the parts for the model(s) on the cover page. When you are ordering replacement parts, please refer to this Parts Catalogue and quote both part numbers and part names correctly.

1. Modifications or additions which have been made after the issue of the Parts Catalogue will be announced in the Parts News.
   It is advisable that you make the necessary corrections to the Parts Catalogue according to the Parts News.

2. Abbreviations
   The following abbreviations are used in this Parts Catalogue.

   "UR" Use specified parts number.
   "UN" Use as many as needed.
   "AP" Alternate Parts
   "LM" Locally Made (Parts need to be ordered locally)
   "F#" Frame No. (Applicable machine No.)
   "O/S" Over Size

3. The number of components for assembly
   - Parts, which are to be supplied in an assembly, are listed with a dot (.) in front of the part name as shown below.
   - The numeral appearing to the right of each component part indicates the quantity of parts for each assembly unit.

PART NO.	DESCRIPTION	Q'TY	REMARKS
2F5–83310–60	FRONT FLASHER LIGHT ASSY	2	
115–83311–60	.BULB (6V–18W)	1	

4. Applicable colours of graphics are represented in the "REMARKS" as shown below.

PART NO.	DESCRIPTION	Q'TY	REMARKS
2N4–24110–00–X5	FUEL TANK COMP.	2	MXR
3J1–24240–10	.GRAPHIC, FUEL TANK	1	FOR MXR

5. Note that the illustrations for reference in finding parts numbers are not to be used for assembling. When assembling, please use the applicable service manual.

6. The asterisk (*) before a reference number indicates modified items after the first edition.

7. Applicable Serial No.

   Engine Serial No.

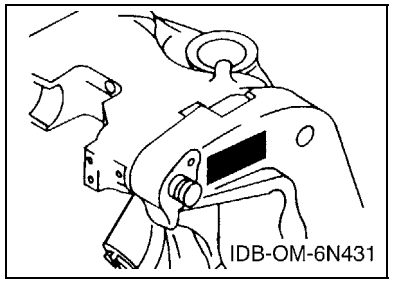

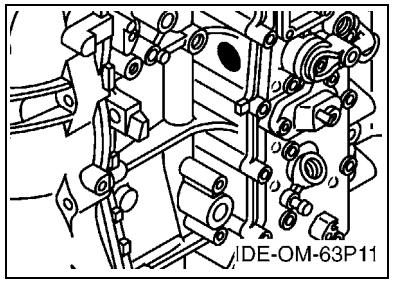

8. Applicable Engine Starting Serial No.

Model	Serial No.	Model	Serial No.
F150	63P-1000001	LF150	64P-1000001
F150A	63P-1000001	FL150A	64P-1000001

9. Applicable Colour Code

Abbreviation	Colour Name	Colour Code
DBN1	DARK BLUISH GRAY 1	008D

10. Quantity Column Information

Column No.	Name Of Q'ty Column	Applicable Model
1	63P1	F150TRC,F150AET
2	64P1	LF150TRC,FL150AET

CONTENTS

SHEET1/2
TOP COWLING A4
CYLINDER & CRANKCASE 1 ..... A6
CRANKSHAFT & PISTON B1
CYLINDER & CRANKCASE 2 ..... B2
CYLINDER & CRANKCASE 3 ..... B4
VALVE B6
INTAKE 1 ..... C1
INTAKE 2 ..... C2
FUEL INJECTION PUMP 1 ..... C4
FUEL INJECTION PUMP 2 ..... C5
FUEL 1 ..... C6
FUEL 2 ..... D1
GENERATOR D2
ELECTRICAL 1 ..... D4
ELECTRICAL 2 ..... D5
ELECTRICAL 3 ..... D7
STARTING MOTOR E2
BOTTOM COWLING E4
CONTROL E6
BRACKET 1 ..... F2
BRACKET 2 ..... F4
POWER TRIM & TILT ASSY 1 ..... F6

INDEX

NUMERICAL INDEX G1

SHEET2/2
POWER TRIM & TILT ASSY 2 ..... A4*
UPPER CASING A6*
OIL PAN B1*
LOWER CASING & DRIVE 1 ..... B2*
LOWER CASING & DRIVE 2 ..... B6*
LOWER CASING & DRIVE 3 ..... C1*
LOWER CASING & DRIVE 4 ..... C5*
STEERING GUIDE ATTACHMENT 1 ..... C7*
STEERING GUIDE ATTACHMENT 2 ..... D1*
REMOTE CONTROL BOX D2*
REMOTE CONTROL ASSY 1 ..... D3*
REMOTE CONTROL ASSY 2 ..... D6*
REMOTE CONTROL ASSY 3 ..... E2*
METER E5*
SWITCH & PANEL 1 ..... E7*
SWITCH & PANEL 2 ..... F1*
REPAIR KIT 1 ..... F2*
REPAIR KIT 2 ..... F3*

INDEX

NUMERICAL INDEX G1*

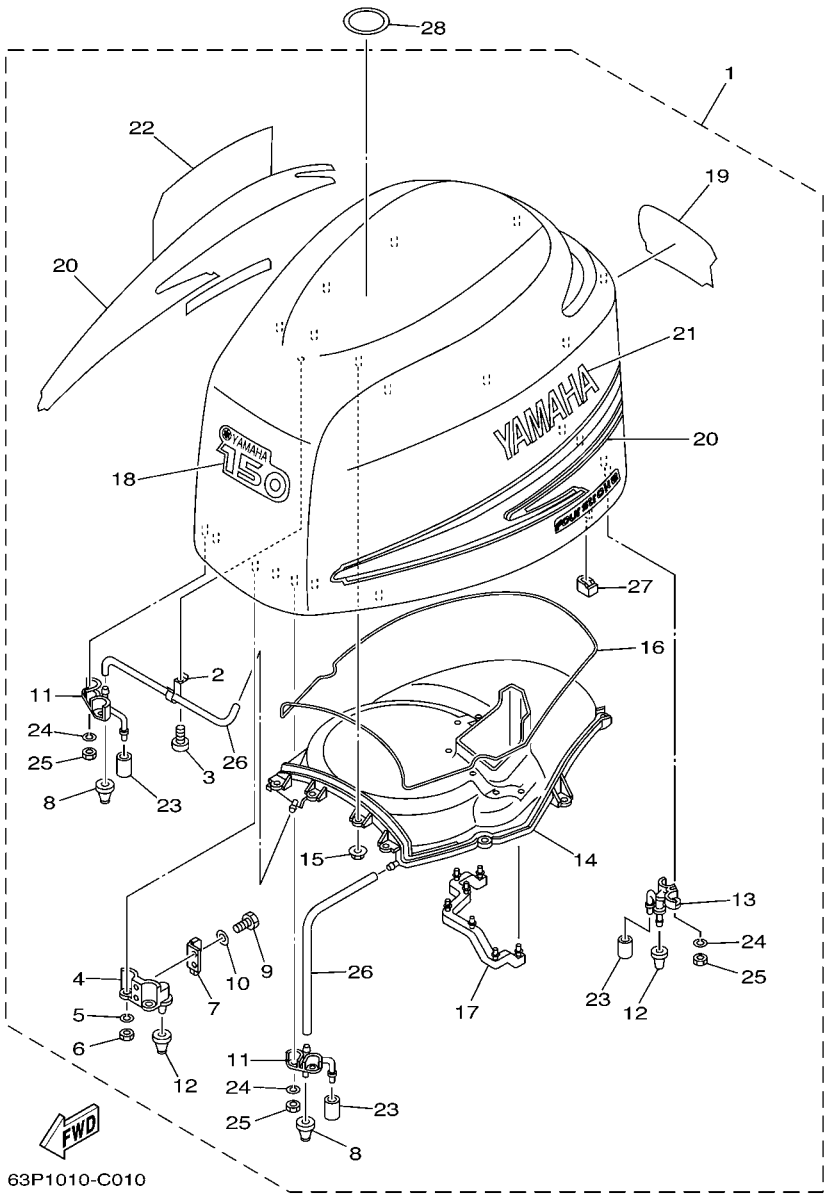

FIG. 1 TOP COWLING

REF. NO.	PART NO.	DESCRIPTION	63P1	64P1				REMARKS
1	63P–42610–00–8D	TOP COWLING ASSY	1	1				
2	90465–10032	.CLAMP	1	1				
3	97780–50620	.SCREW, TAPPING	1	1				
4	63P–42647–00–94	.HOLDER, CLAMP BAND	2	2				
5	92990–06100	.WASHER, SPRING	4	4				
6	95380–06600	.NUT, HEXAGON	4	4				
7	60V–42651–01	.HOOK	2	2				
8	69J–42663–00	.DAMPER	2	2				
9	97095–06016	.BOLT	4	4				
10	92995–06600	.WASHER	4	4				
11	63P–42643–00–94	.PLATE, CLAMP	2	2				
12	68F–42663–00	.DAMPER	4	4				
13	63P–42644–00–94	.PLATE, CLAMP 2	2	2				
14	63P–42613–00	.MOLDING, AIR DUCT	1	1				
15	90179–06M24	.NUT	10	10				
16	63P–42629–00	.SEAL	1	1				
17	63P–42617–00	.DAMPER, FORM	1	1				
18	63P–42677–00	.GRAPHIC, FRONT	1	1				
19	63P–42678–00	.GRAPHIC, REAR	1	1				
20	63P–W0070–00	.GRAPHIC SET	1	1				
21	63P–42681–00	.MARK, COWLING	1	1				
22	63P–42682–00	.MARK, COWLING	1	1				
23	67F–13448–00	.CAP	4	4				
24	92990–06100	.WASHER, SPRING	8	8				
25	95380–06600	.NUT, HEXAGON	8	8				
26	90445–11020	.HOSE (L400)	2	2				
27	63P–42662–00	.DAMPER	4	4				

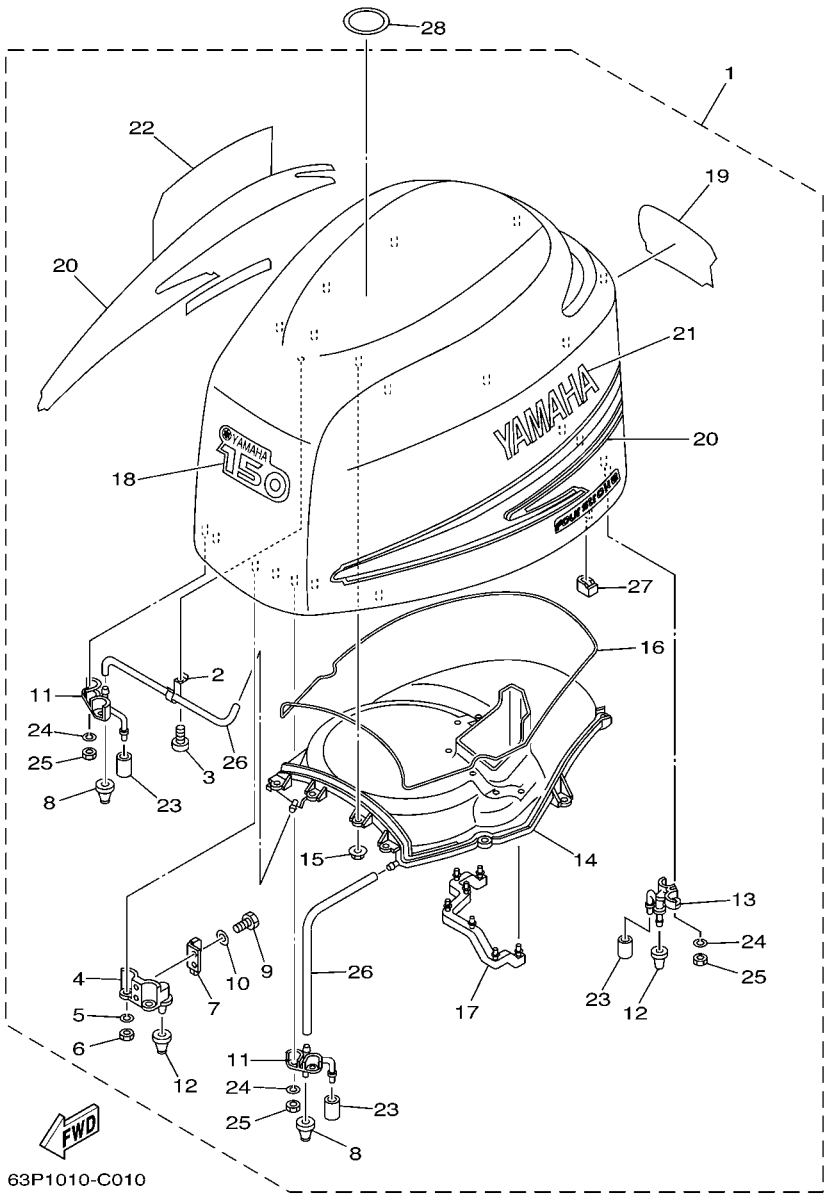

FIG. 1 TOP COWLING

REF. NO.	PART NO.	DESCRIPTION	63P1	64P1				REMARKS
28	67F–13434–02	LABEL, CAUTION	1	1				

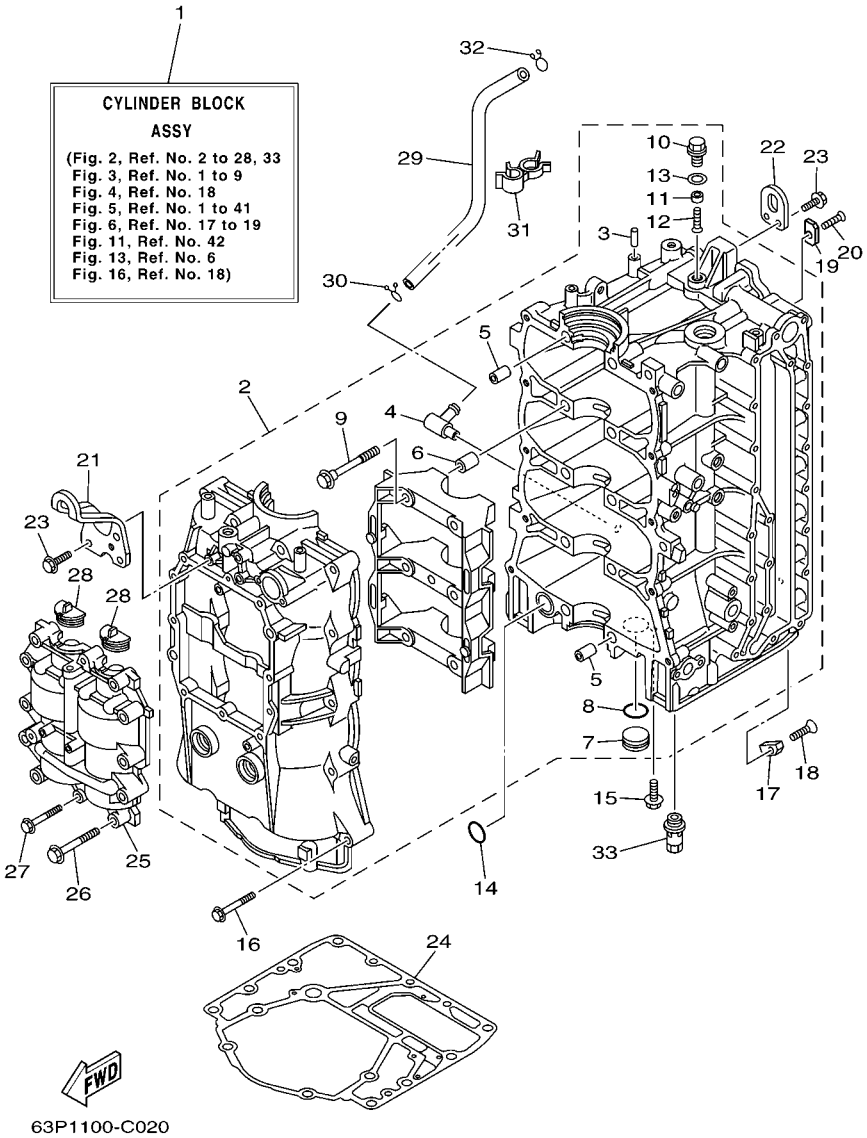

FIG. 2 CYLINDER & CRANKCASE 1

REF. NO.	PART NO.	DESCRIPTION	63P1	64P1				REMARKS
1	63P–W009B–00–1S	CYLINDER BLOCK ASSY	1	1				
2	63P–W1510–00–1S	CRANKCASE ASSY	1	1				
3	93606–12019	.PIN, DOWEL	1	1				
4	63P–11372–00	.NIPPLE, HOSE	1	1				
5	91814–18001	.PIN, DOWEL	4	4				
6	91814–18001	.PIN, DOWEL	6	6				
7	90338–25004	.PLUG	1	1				
8	93210–25647	.O-RING	1	1				
9	90105–10071	.BOLT, FLANGE	10	10				
10	63P–11197–00	.PLUG, BLIND	1	1				
11	63P–11325–B0	.ANODE	1	1				
12	98780–05016	.SCREW, FLAT HEAD	1	1				
13	90430–14115	.GASKET	1	1				
14	93210–25552	O-RING	1	1				
15	90119–06M81	BOLT, WITH WASHER	1	1				
16	90119–08M66	BOLT, WITH WASHER	10	10				
17	63P–11325–00	ANODE	1	1				
18	90151–06M02	SCREW, COUNTERSUNK	1	1				
19	63P–11325–A0	ANODE	2	2				
20	90151–06M02	SCREW, COUNTERSUNK	2	2				
21	63P–11119–00	HANGER, ENGINE	1	1				
22	68F–11119–00	HANGER, ENGINE	1	1				
23	90119–06MA2	BOLT, WITH WASHER	5	5				
24	63P–11351–00	GASKET, CYLINDER	1	1				
25	63P–11500–00	BALANCER ASSY	1	1				
26	90119–08M66	BOLT, WITH WASHER	10	10				
27	90119–06MA6	BOLT, WITH WASHER	2	2				

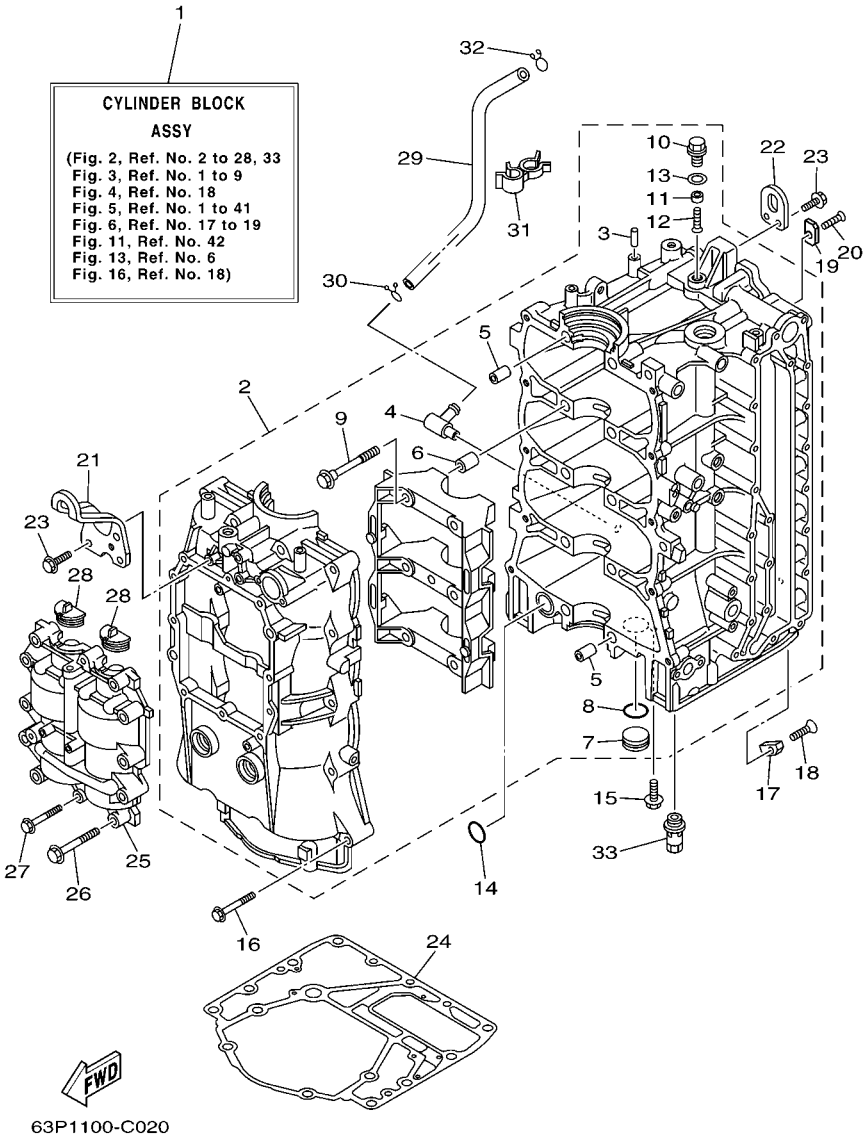

FIG. 2 CYLINDER & CRANKCASE 1

REF. NO.	PART NO.	DESCRIPTION	63P1	64P1				REMARKS
28	63P–11512–00	SEAL, CRANK COVER	2	2				
29	63P–11377–00	HOSE	1	1				
30	90467–15M14	CLIP	1	1				
31	90464–16013	CLAMP	1	1				
32	90467–15M14	CLIP	1	1				
33	63P–13490–00	RELIEF VALVE ASSY	1	1				

FIG. 3 CRANKSHAFT & PISTON

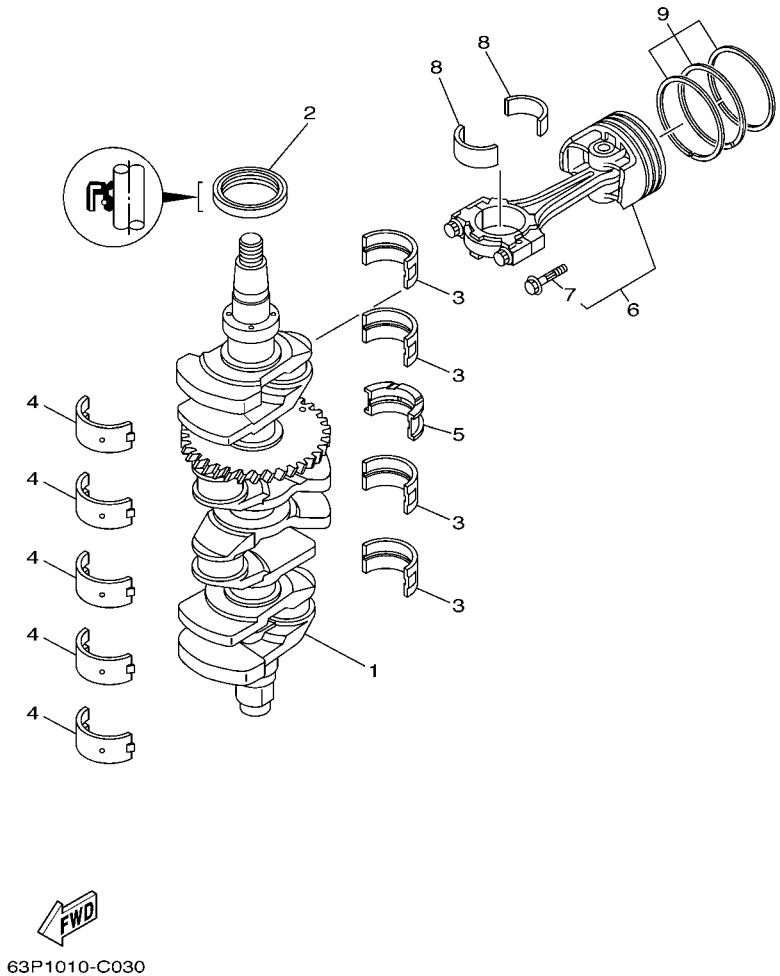

REF. NO.	PART NO.	DESCRIPTION	63P1	64P1				REMARKS
1	63P–11410–00	CRANKSHAFT	1	1				
2	93102–60004	OIL SEAL	1	1				
3	63P–11416–00	PLANE BEARING, CRANKSHAFT 1	4	4				UR GREEN
	63P–11416–10	PLANE BEARING, CRANKSHAFT 1	4	4				UR RED
	63P–11416–20	PLANE BEARING, CRANKSHAFT 1	4	4				UR YELLOW
4	63P–11417–00	PLANE BEARING, CRANKSHAFT 2	5	5				UR GREEN
	63P–11417–10	PLANE BEARING, CRANKSHAFT 2	5	5				UR RED
	63P–11417–20	PLANE BEARING, CRANKSHAFT 2	5	5				UR YELLOW
	63P–11417–30	PLANE BEARING, CRANKSHAFT 2	5	5				UR BLUE/ GREEN
5	63P–11426–00	PLANE BEARING, CRANKSHAFT 1	1	1				UR GREEN
	63P–11426–10	PLANE BEARING, CRANKSHAFT 1	1	1				UR RED
	63P–11426–20	PLANE BEARING, CRANKSHAFT 1	1	1				UR YELLOW
6	63P–W1164–00	PISTON/CONROD ASSY(STD)	1	1				
7	63P–11654–00	.BOLT, CONNECTING ROD	2	2				
8	63P–11656–00	PLANE BEARING, CONNECTING ROD	8	8				UR GREEN
	63P–11656–10	PLANE BEARING, CONNECTING ROD	8	8				UR BLUE
	63P–11656–20	PLANE BEARING, CONNECTING ROD	8	8				UR RED
9	63P–11603–00	PISTON RING SET (STD)	4	4				

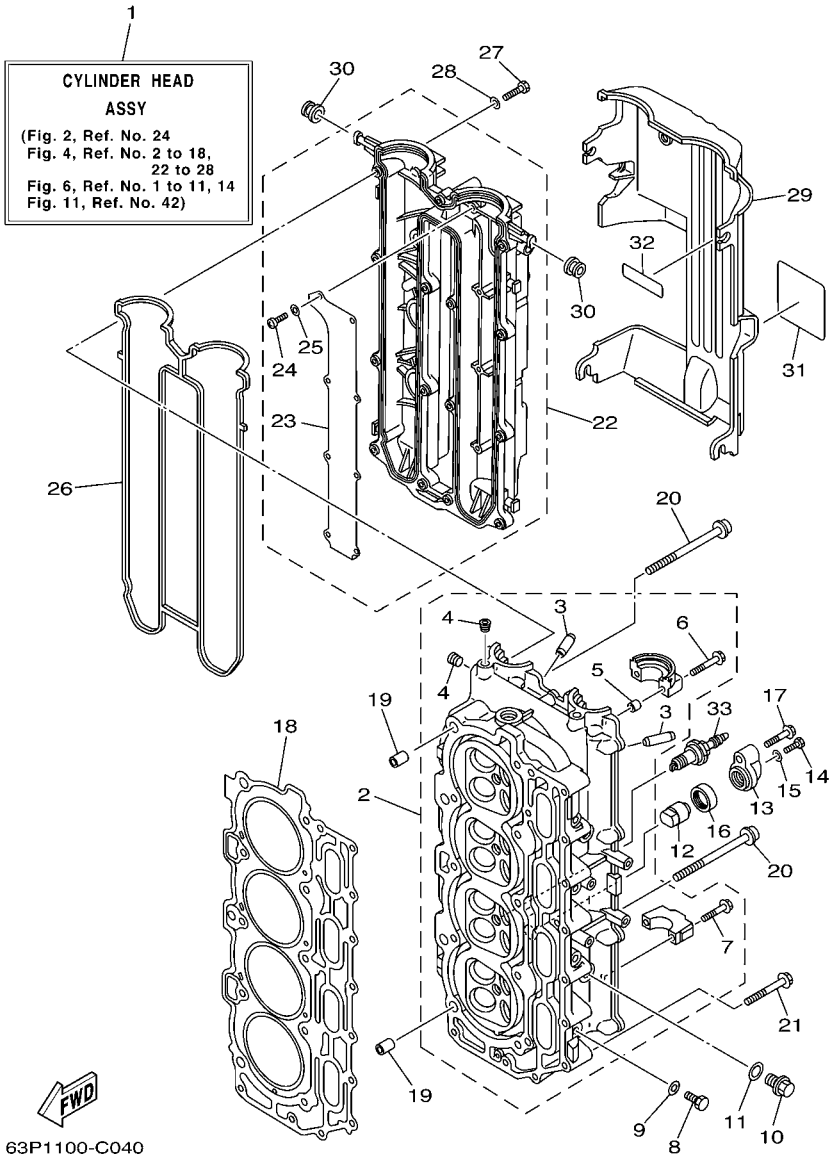

FIG. 4 CYLINDER & CRANKCASE 2

REF. NO.	PART NO.	DESCRIPTION	63P1	64P1				REMARKS
1	63P–W009A–00–1S	CYLINDER HEAD ASSY	1	1				
2	63P–11110–00–94	CYLINDER HEAD ASSY	1	1				
3	69J–11133–10	.GUIDE, VALVE 1	16	16				
4	90344–51019	.PLUG, TAPER SCREW	3	3				
5	91809–08006	.PIN, DOWEL	4	4				
6	90119–07235	.BOLT, WITH WASHER	4	4				
7	90119–07234	.BOLT, WITH WASHER	16	16				
8	97095–08014	BOLT	4	4				
9	90430–08143	GASKET	4	4				
10	90340–14M06	PLUG, STRAIGHT SCREW	2	2				
11	90430–14115	GASKET	2	2				
12	68V–11325–00	ANODE	2	2				
13	69J–11327–00–94	COVER, ANODE	2	2				
14	97075–06020	BOLT	2	2				
15	92995–06600	WASHER	2	2				
16	67F–11328–00	GROMMET, ANODE	2	2				
17	97575–08540	BOLT, WITH WASHER	2	2				
18	63P–11181–00	GASKET, CYLINDER HEAD 1	1	1				
19	90387–10M08	COLLAR	2	2				
20	90155–10001	SCREW, FLAT FILLISTER	10	10				
21	90119–08M91	BOLT, WITH WASHER	10	10				
22	63P–11191–00–1S	COVER, CYLINDER HEAD 1	1	1				
23	63P–11135–00	.PLATE, BREATHER 3	1	1				
24	98507–04008	.SCREW, PAN HEAD	8	8				
25	92907–04600	.WASHER	8	8				
26	63P–11193–00	GASKET, HEAD COVER 1	1	1				
27	97095–06030	BOLT	15	15				

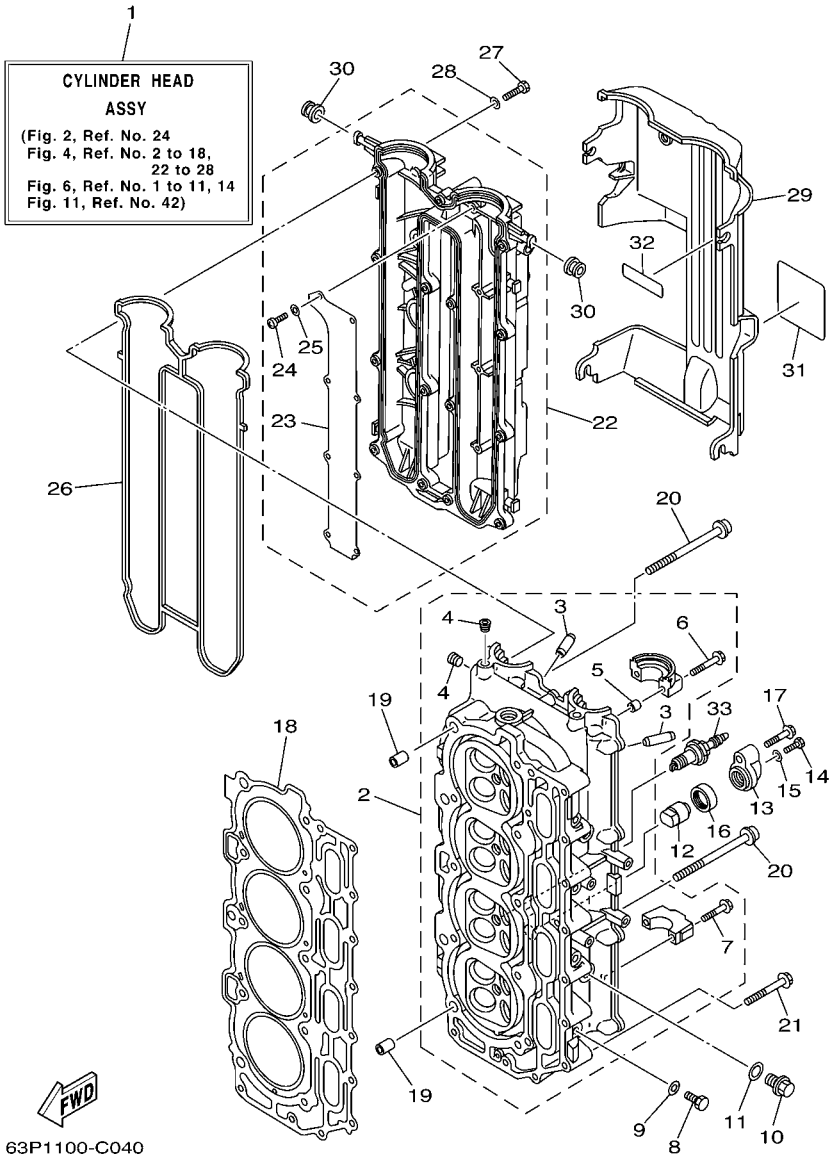

FIG. 4 CYLINDER & CRANKCASE 2

REF. NO.	PART NO.	DESCRIPTION	63P1	64P1				REMARKS
28	92995–06600	WASHER	15	15				
29	63P–11192–00	COVER, CYLINDER HEAD 2	1	1				
30	90480–12072	GROMMET	6	6				
31	63P–83626–00	MARK 6	1	1				
32	67F–12138–40	MARK, CAUTION	1	1				FOR USA,OCE
	67F–12138–50	MARK, CAUTION	1	1				FOR CAN
	67F–12138–60	MARK, CAUTION	1	1				FOR CAR
33	94702–00391	PLUG, SPARK (NGK LFR5A-11)	4	4				

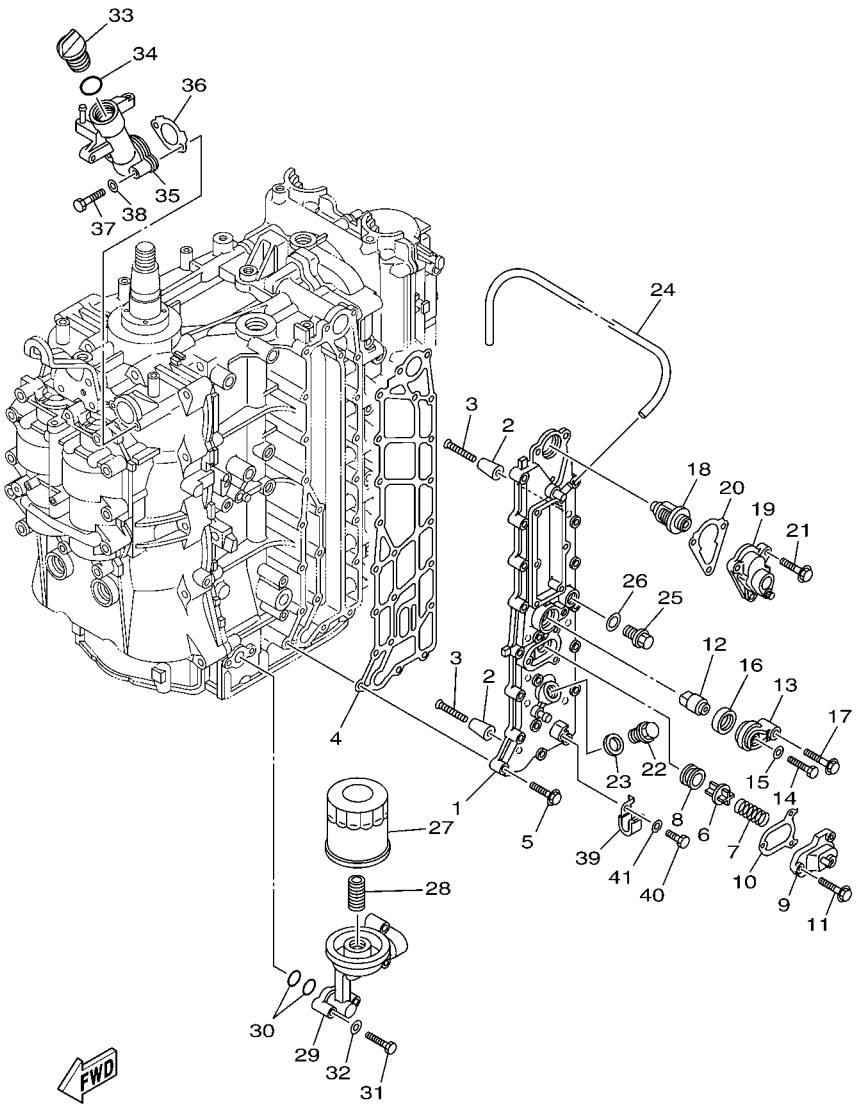

63P1010-C050

FIG. 5 CYLINDER & CRANKCASE 3

REF. NO.	PART NO.	DESCRIPTION	63P1	64P1				REMARKS
1	63P–41113–00–1S	OUTER COVER, EXHAUST	1	1				
2	68T–11325–00	ANODE	7	7				
3	90151–05M05	SCREW, COUNTERSUNK	7	7				
4	63P–41114–A0	GASKET, EXHAUST OUTER COVER	1	1				
5	90119–06MA4	BOLT, WITH WASHER	19	19				
6	6G5–12416–00	VALVE, PRESSURE CONTROL	1	1				
7	90501–16M11	SPRING, COMPRESSION	1	1				
8	90480–20M05	GROMMET	1	1				
9	67F–1246A–00–1S	COVER 1	1	1				
10	67F–12435–A0	GASKET	1	1				
11	90119–06MA2	BOLT, WITH WASHER	3	3				
12	68V–11325–00	ANODE	1	1				
13	69J–11327–00–94	COVER, ANODE	1	1				
14	97075–06020	BOLT	1	1				
15	92995–06600	WASHER	1	1				
16	67F–11328–00	GROMMET, ANODE	1	1				
17	97575–08540	BOLT, WITH WASHER	1	1				
18	67F–12411–00	THERMOSTAT	1	1				
19	63P–1240H–00–1S	COVER ASSEMBLY	1	1				
20	63P–12414–00	GASKET, COVER	1	1				
21	90119–06MA4	BOLT, WITH WASHER	3	3				
22	90340–18M09	PLUG, STRAIGHT SCREW	1	1				
23	90430–18130	GASKET	1	1				
24	90445–10027	HOSE (L670)	1	1				
25	90340–14M06	PLUG, STRAIGHT SCREW	1	1				
26	90430–14115	GASKET	1	1				
27	69J–13440–00	ELEMENT ASSY, OIL CLEANER	1	1				

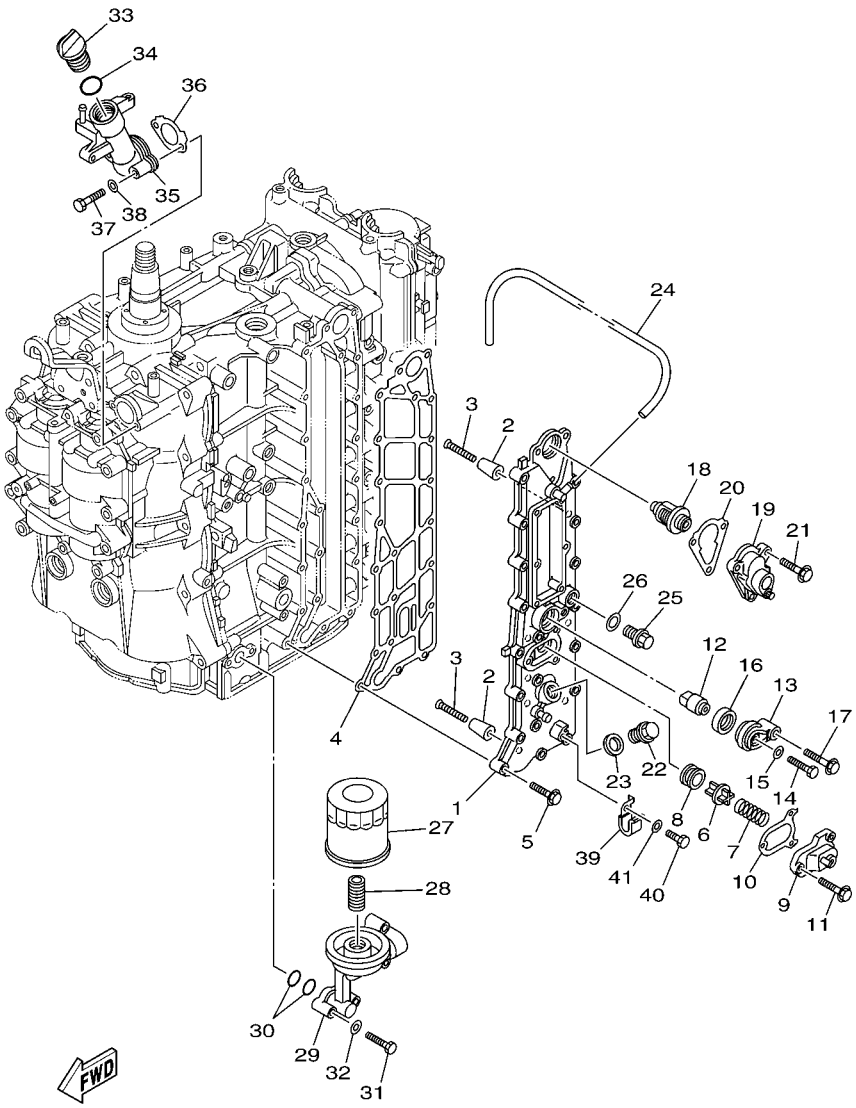

63P1010-C050

FIG. 5 CYLINDER & CRANKCASE 3

REF. NO.	PART NO.	DESCRIPTION	63P1	64P1				REMARKS
28	69J–12858–00	BOLT, UNION	1	1				
29	63P–13446–00–94	CONNECTOR	1	1				
30	93210–19MJ1	O-RING	2	2				
31	97095–06040	BOLT	4	4				
32	92995–06600	WASHER	4	4				
33	6G8–15363–00	PLUG, OIL	1	1				
34	93210–24M79	O-RING	1	1				
35	63P–15319–00–1S	JOINT	1	1				
36	63P–15364–A0	GASKET, OIL PLUG	1	1				
37	97095–06045	BOLT	2	2				
38	92995–06600	WASHER	2	2				
39	90465–08M99	CLAMP	1	1				
40	97095–06012	BOLT	1	1				
41	92995–06600	WASHER	1	1				

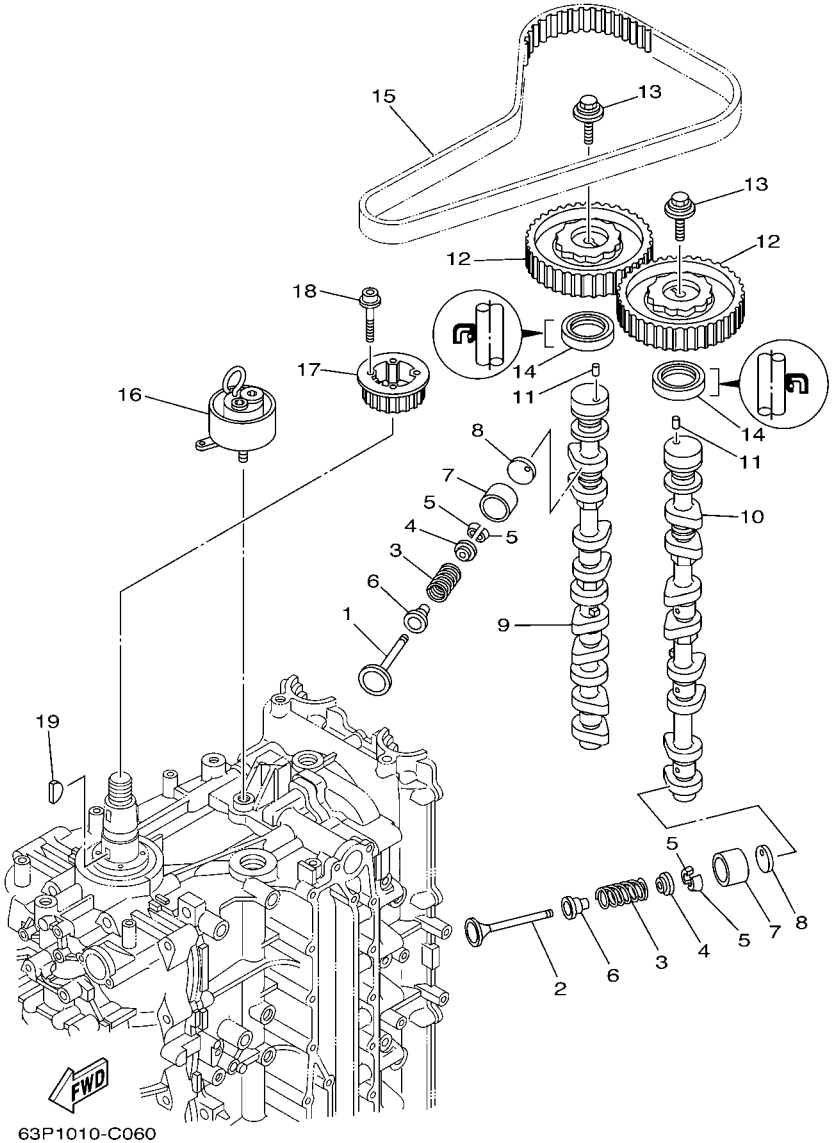

FIG. 6 VALVE

REF. NO.	PART NO.	DESCRIPTION	63P1	64P1				REMARKS
1	69J–12111–00	VALVE, INTAKE	8	8				
2	69J–12121–00	VALVE, EXHAUST	8	8				
3	69J–12113–00	SPRING, VALVE INNER	16	16				
4	69J–12117–00	RETAINER, VALVE SPRING	16	16				
5	69J–12118–00	COTTER, VALVE	32	32				
6	69J–12119–00	SEAL, VALVE STEM	16	16				
7	69J–12153–00	LIFTER, VALVE	16	16				
8	69J–12168–00	PAD, ADJUSTING (2.320)	16	16				UR
	69J–12168–10	PAD, ADJUSTING (2.340)	16	16				UR
	69J–12168–20	PAD, ADJUSTING (2.360)	16	16				UR
	69J–12168–30	PAD, ADJUSTING (2.380)	16	16				UR
	69J–12168–40	PAD, ADJUSTING (2.400)	16	16				UR
	69J–12168–50	PAD, ADJUSTING (2.420)	16	16				UR
	69J–12168–60	PAD, ADJUSTING (2.440)	16	16				UR
	69J–12168–70	PAD, ADJUSTING (2.460)	16	16				UR
	69J–12168–80	PAD, ADJUSTING (2.480)	16	16				UR
	69J–12168–90	PAD, ADJUSTING (2.500)	16	16				UR
	69J–12168–A0	PAD, ADJUSTING (2.520)	16	16				UR
	69J–12168–B0	PAD, ADJUSTING (2.540)	16	16				UR
	69J–12168–C0	PAD, ADJUSTING (2.560)	16	16				UR
	69J–12168–D0	PAD, ADJUSTING (2.580)	16	16				UR
	69J–12168–E0	PAD, ADJUSTING (2.600)	16	16				UR
	69J–12168–F0	PAD, ADJUSTING (2.620)	16	16				UR
	69J–12168–G0	PAD, ADJUSTING (2.640)	16	16				UR
	69J–12168–H0	PAD, ADJUSTING (2.660)	16	16				UR
	69J–12168–J0	PAD, ADJUSTING (2.680)	16	16				UR
	69J–12168–K0	PAD, ADJUSTING (2.700)	16	16				UR

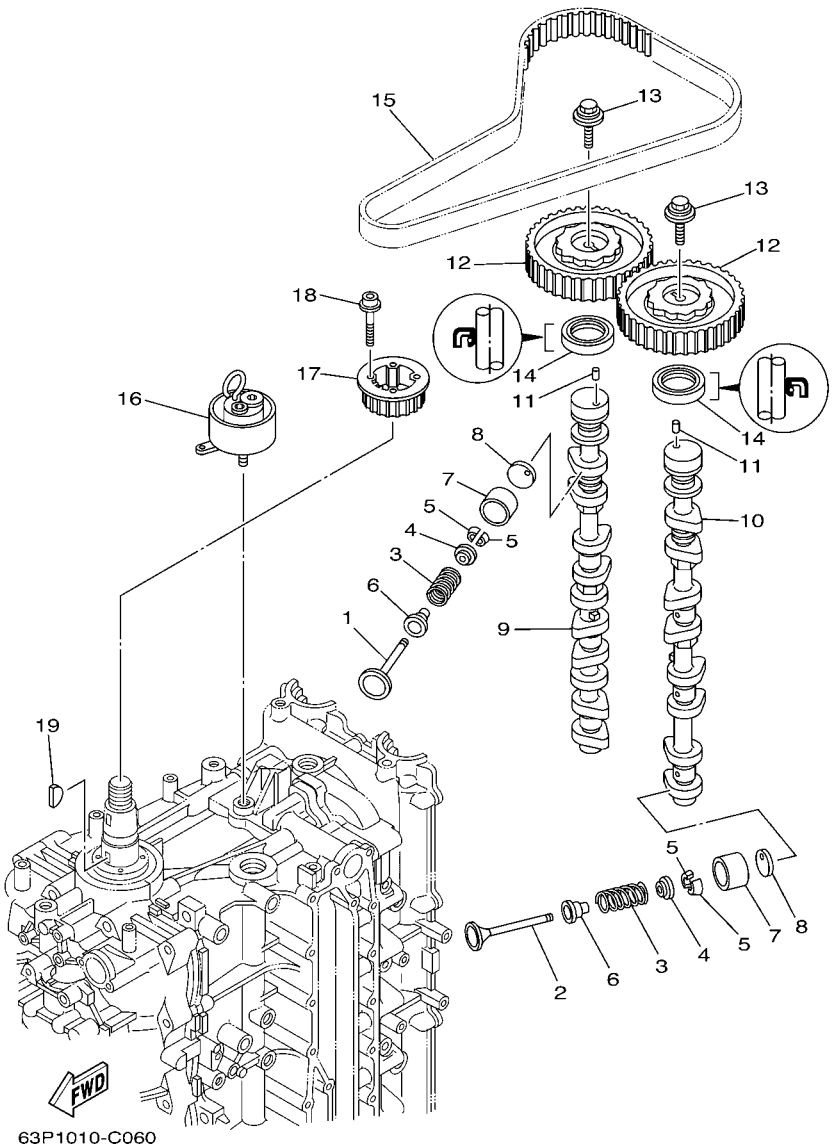

FIG. 6 VALVE

REF. NO.	PART NO.	DESCRIPTION	63P1	64P1				REMARKS
8	69J–12168–L0	PAD, ADJUSTING (2.720)	16	16				UR
	69J–12168–M0	PAD, ADJUSTING (2.740)	16	16				UR
	69J–12168–N0	PAD, ADJUSTING (2.760)	16	16				UR
	69J–12168–P0	PAD, ADJUSTING (2.780)	16	16				UR
	69J–12168–R0	PAD, ADJUSTING (2.800)	16	16				UR
	69J–12168–S0	PAD, ADJUSTING (2.820)	16	16				UR
	69J–12168–T0	PAD, ADJUSTING (2.840)	16	16				UR
	69J–12168–U0	PAD, ADJUSTING (2.860)	16	16				UR
	69J–12168–V0	PAD, ADJUSTING (2.880)	16	16				UR
	69J–12168–W0	PAD, ADJUSTING (2.900)	16	16				UR
	69J–12168–X0	PAD, ADJUSTING (2.920)	16	16				UR
	69J–12168–Y0	PAD, ADJUSTING (2.940)	16	16				UR
	69J–12169–00	PAD, ADJUSTING (2.960)	16	16				UR
9	63P–12171–00	CAMSHAFT 1	1	1				
10	63P–12181–00	CAMSHAFT 2	1	1				
11	93605–10108	PIN, DOWEL	2	2				
12	63P–11537–00	GEAR, DRIVEN	2	2				
13	90119–10M06	BOLT, WITH WASHER	2	2				
14	93102–38M59	OIL SEAL	2	2				
15	63P–46241–00	V-BELT	1	1				
16	63P–11590–00	TENSIONER ASSY	1	1				
17	63P–11536–00	GEAR, DRIVE	1	1				
18	90110–05020	BOLT, HEXAGON SOCKET HEAD	4	4				
19	90280–04008	KEY, WOODRUFF	1	1				

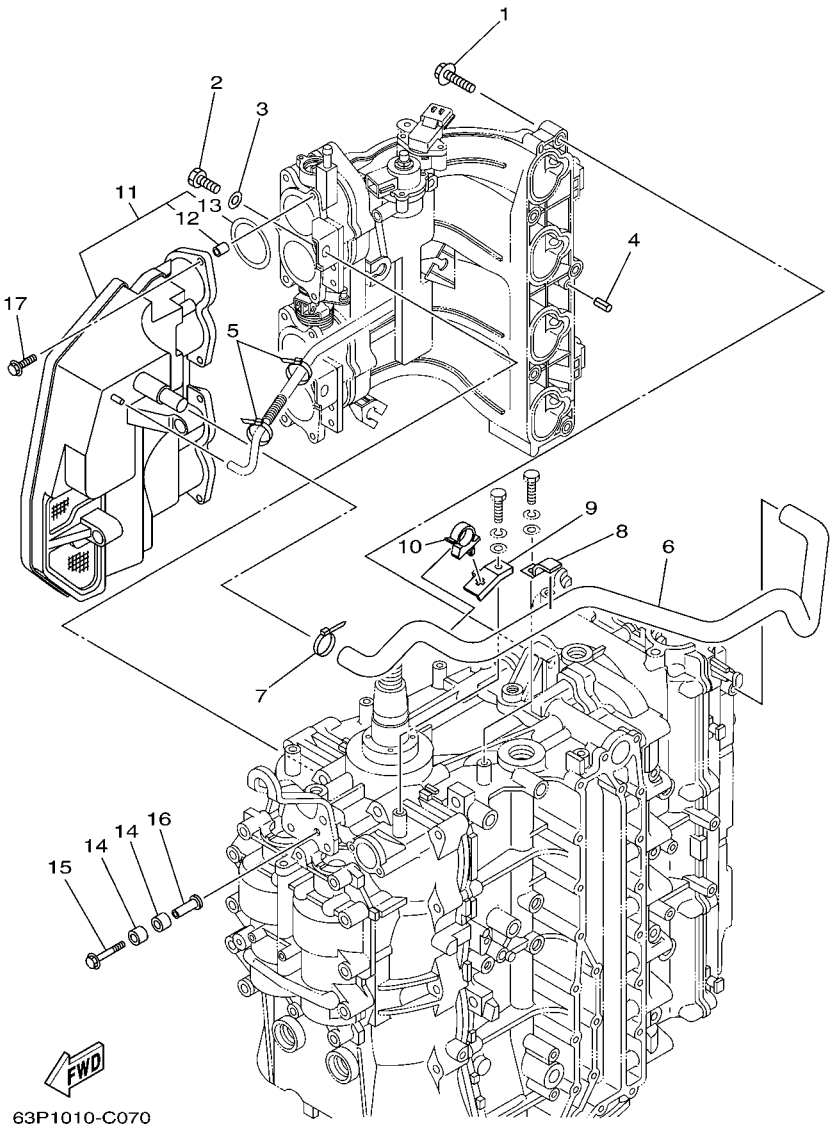

FIG. 7 INTAKE 1

REF. NO.	PART NO.	DESCRIPTION	63P1	64P1				REMARKS
1	97575–08540	BOLT, WITH WASHER	5	5				
2	97013–08020	BOLT	2	2				
3	92903–08600	WASHER, PLATE	2	2				
4	91690–50014	PIN, SPRING	2	2				
5	90465–11M59	CLAMP	2	2				
6	63P–15373–00	PIPE, BREATHER	1	1				
7	90465–11M10	CLAMP	1	1				
8	90462–10023	CLAMP	1	1				
9	63P–15378–00	HOLDER	1	1				
10	90464–20006	CLAMP	1	1				
11	63P–14440–00	SILENCER ASSY, INTAKE	1	1				
12	63P–14449–00	.COLLAR	6	6				
13	63P–14457–00	.SEAL	4	4				
14	90386–08001	BUSH	4	4				
15	90119–06076	BOLT, WITH WASHER	2	2				
16	90387–06038	COLLAR	2	2				
17	90119–06M82	BOLT, WITH WASHER	6	6				

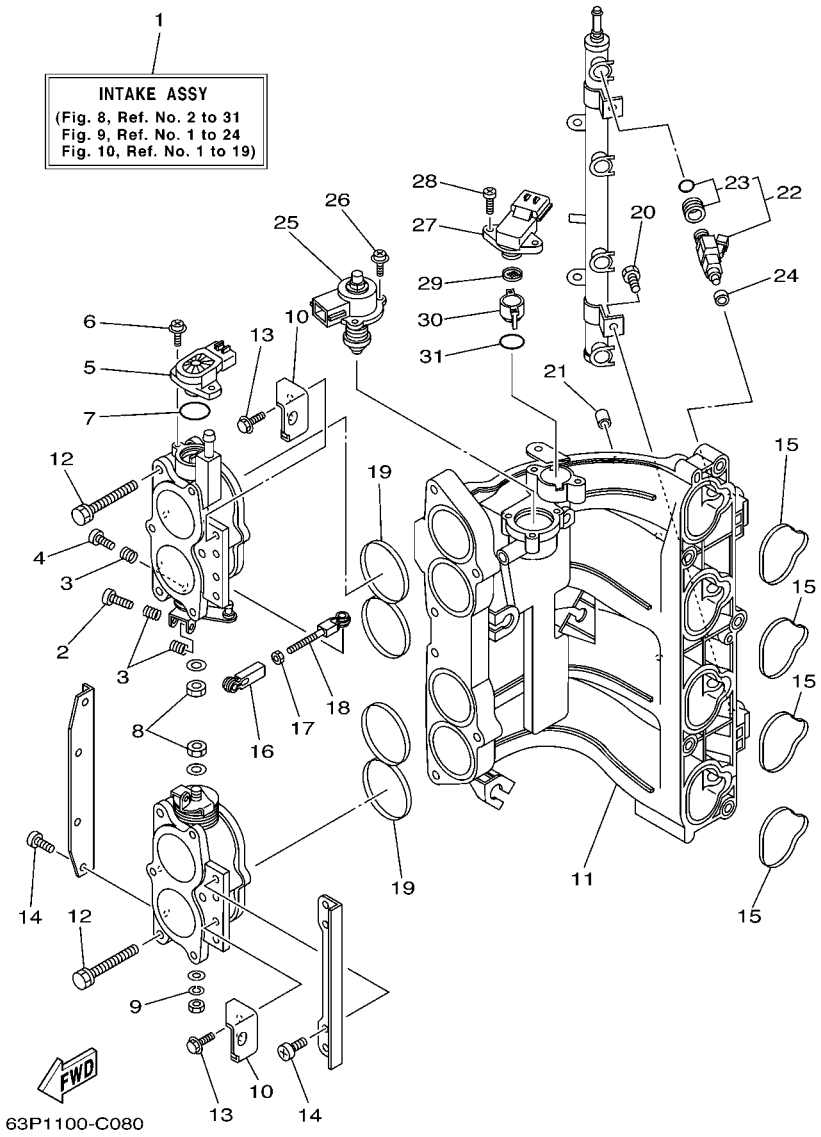

FIG. 8 INTAKE 2

REF. NO.	PART NO.	DESCRIPTION	63P1	64P1				REMARKS
1	63P–14200–00	INTAKE ASSY	1	1				
2	69J–14321–00	SCREW, THROTTLE	1	1				
3	68V–14331–00	SPRING, THROTTLE VALVE	3	3				
4	68V–14323–00	SCREW, AIR ADJUSTING	1	1				
5	69J–85885–00	THROTTLE SENSOR ASSY	1	1				
6	68V–81145–01	SCREW 1	2	2				
7	68V–8182L–00	O-RING 1	1	1				
8	3CF–14594–00	NUT	2	2				
9	68V–14356–00	WASHER, SPRING	1	1				
10	63P–14291–00	BRACKET 1	2	2				
11	63P–13641–00	MANIFOLD 1	1	1				
12	63P–14496–00	BOLT	6	6				
13	97595–06516	BOLT, WITH WASHER	4	4				
14	68V–14565–00	SCREW	8	8				
15	63P–13645–00	GASKET, MANIFOLD 1	4	4				
16	6H4–41237–00	JOINT, LINK	1	1				
17	95380–05700	NUT	1	1				
18	682–41238–01	JOINT, LINK	1	1				
19	63P–13557–00	GASKET	2	2				
20	63P–14446–00	BOLT	2	2				
21	63P–13643–00	COVER, MANIFOLD	4	4				
22	63P–13761–00	INJECTOR ASSY	4	4				
23	68V–1410B–00	.PACKING KIT	1	1				
24	68V–13766–00	RUBBER, INJECTOR	4	4				
25	63P–1312A–00	VALVE, CONTROL	1	1				
26	68V–81146–01	SCREW 2	3	3				
27	63P–82380–00	SENSOR, PRESSURE	1	1				

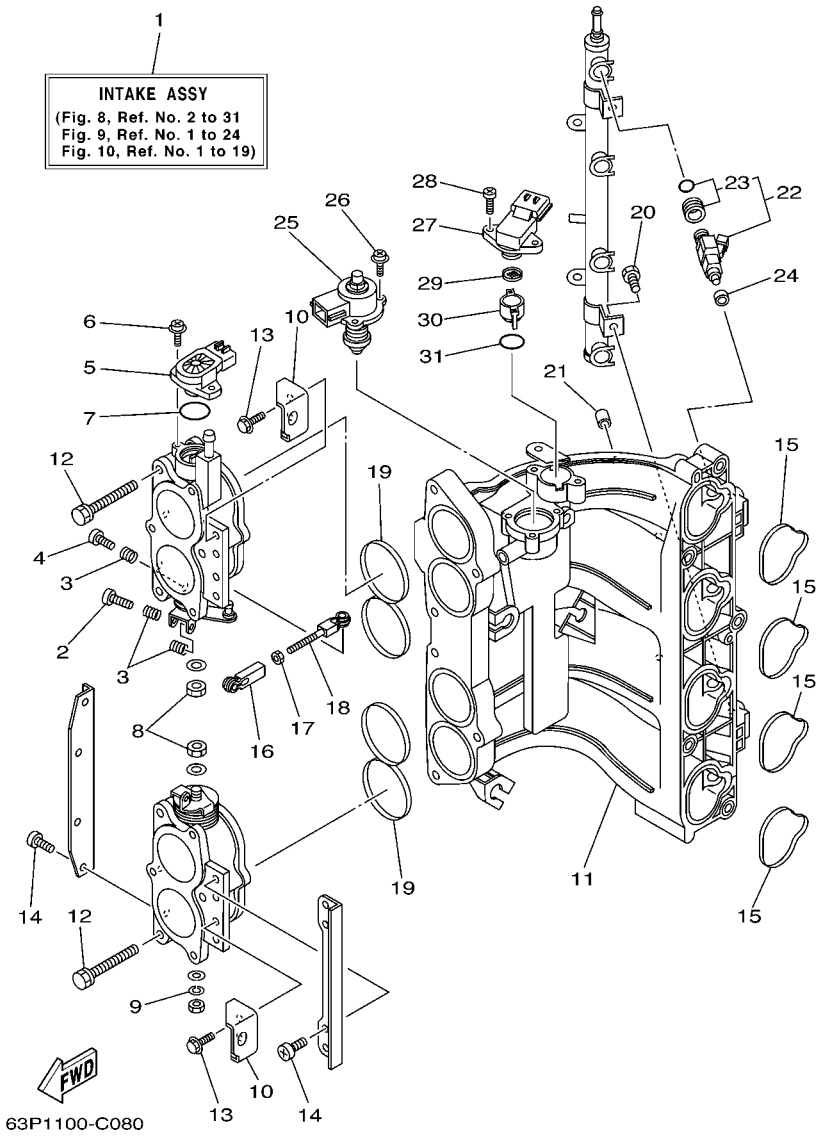

FIG. 8 INTAKE 2

REF. NO.	PART NO.	DESCRIPTION	63P1	64P1				REMARKS
28	68V–81147–00	SCREW 3	2	2				
29	63P–13905–00	FILTER COMP.	1	1				
30	63P–13898–00	HOLDER	1	1				
31	63P–13769–00	O-RING	1	1				

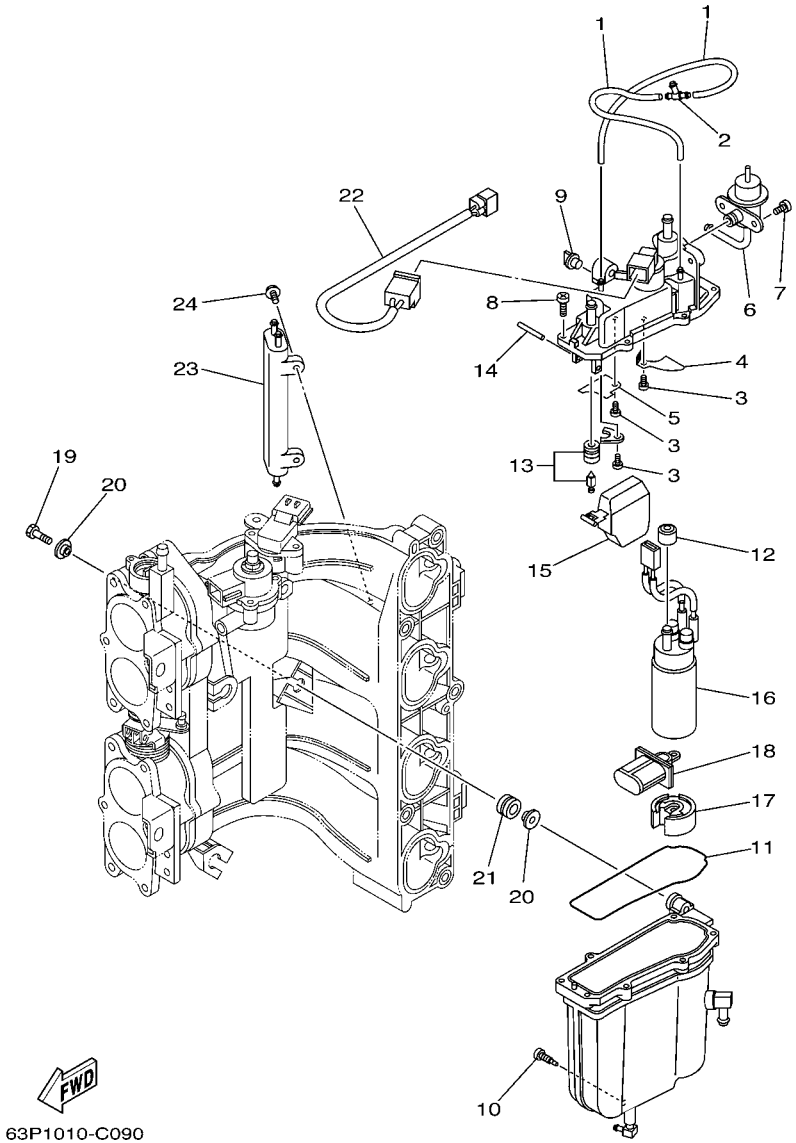

FIG. 9 FUEL INJECTION PUMP 1

REF. NO.	PART NO.	DESCRIPTION	63P1	64P1				REMARKS
1	63P–14148–00	PIPE	2	2				
2	69J–24379–00	PIPE, JOINT 4	1	1				
3	4SV–24453–00	SCREW	3	3				
4	63P–2441R–00	PLATE, BAFFLE 1	1	1				
5	63P–2441T–00	PLATE, BAFFLE 2	1	1				
6	63P–13906–00	REGULATOR, PRESSURE	1	1				
7	63P–14565–00	SCREW	2	2				
8	63P–14567–00	SCREW	7	7				
9	69J–14225–00	CAP	1	1				
10	63P–14191–00	PLUG, DRAIN	1	1				
11	63P–14984–00	GASKET, FLOAT CHAMBER	1	1				
12	68V–13781–00	DAMPER, PUMP	1	1				
13	63P–14546–00	VALVE, NEEDLE	1	1				
14	68V–14386–00	PIN, FLOAT	1	1				
15	63P–14985–00	FLOAT	1	1				
16	63P–13907–00	FUEL PUMP COMP.	1	1				
17	63P–13784–00	COVER, PUMP	1	1				
18	63P–13915–00	FILTER	1	1				
19	63P–14777–00	BOLT	3	3				
20	69J–13716–00	COLLAR	6	6				
21	69J–13593–00	DAMPER	3	3				
22	63P–8259L–00	WIRE HARNESS ASSY 1	1	1				
23	69J–21841–00	COOLER	1	1				
24	68V–14446–00	BOLT	2	2				

FIG. 10 FUEL INJECTION PUMP 2

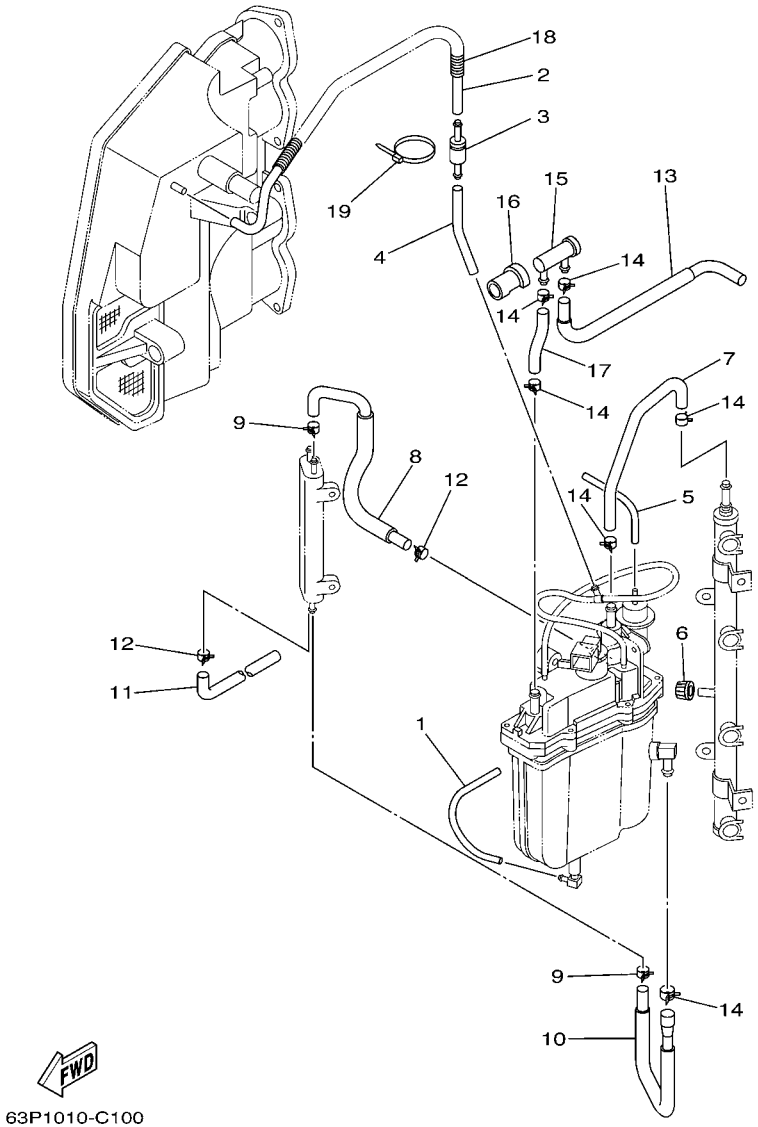

REF. NO.	PART NO.	DESCRIPTION	63P1	64P1				REMARKS
1	63P–14149–00	PIPE	1	1				
2	63P–1441J–00	PIPE, SILENCER	1	1				
3	63P–13490–00	RELIEF VALVE ASSY	1	1				
4	63P–14197–00	PIPE	1	1				
5	63P–13532–00	HOSE, VACUUM SENSING 3	1	1				
6	63P–14225–00	CAP	1	1				
7	63P–13974–00	PIPE, FUEL 4	1	1				
8	63P–13976–00	PIPE, FUEL 6	1	1				
9	68V–2411M–00	CLIP	2	2				
10	63P–24317–00	PIPE 7	1	1				
11	63P–22478–00	PIPE 2	1	1				
12	68V–24519–00	CLIP	2	2				
13	63P–24325–00	PIPE 14	1	1				
14	68V–13577–00	CLIP	6	6				
15	69J–24501–00	FILTER, FUEL	1	1				
16	69J–24599–00	CAP	1	1				
17	63P–13975–00	PIPE, FUEL 5	1	1				
18	63P–13881–00	COVER 1	1	1				
19	68V–2481H–00	CLAMP	1	1				

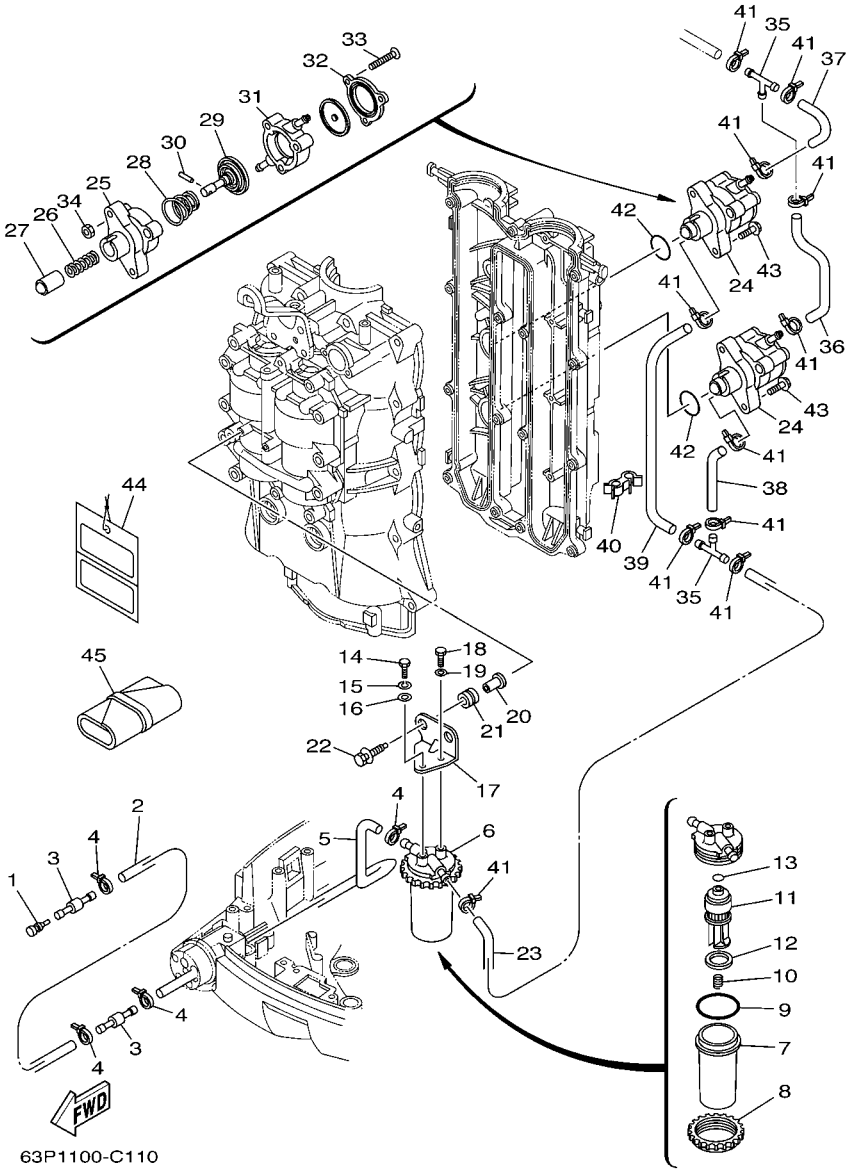

FIG. 11 FUEL 1

REF. NO.	PART NO.	DESCRIPTION	63P1	64P1				REMARKS
1	689–85547–00	DAMPER	1	1				
2	90445–13511	HOSE (L2000)	1	1				
3	6R3–24377–10	PIPE, JOINT 3	2	2				
4	90465–11M10	CLAMP	4	4				
5	63P–24316–00	PIPE 6	1	1				
6	65L–24560–00	FILTER ASSY	1	1				
7	61A–24521–00	.CUP, FILTER	1	1				
8	65L–24531–01	.NUT	1	1				
9	61A–24564–00	.O-RING	1	1				
10	65L–24577–00	.SPRING	1	1				
11	65L–24563–00	.ELEMENT, FILTER	1	1				
12	61A–24469–00	.FLOAT, WATER LEVEL	1	1				
13	65L–24564–00	.O-RING	1	1				
14	97095–06016	BOLT	1	1				
15	92995–06100	WASHER, SPRING	1	1				
16	90201–06068	WASHER, PLATE	1	1				
17	63P–24566–00	BRACKET, FILTER	1	1				
18	97095–06014	BOLT	1	1				
19	92995–06600	WASHER	1	1				
20	90387–06M60	COLLAR	2	2				
21	90480–10M23	GROMMET	2	2				
22	90119–06071	BOLT, WITH WASHER	2	2				
23	63P–24311–00	PIPE, FUEL 1	1	1				
24	63P–24410–00	FUEL PUMP ASSY	2	2				
25	68V–24412–00	.BODY 1	1	1				
26	68V–24454–00	.SPRING	1	1				
27	63P–13131–00	.PLUNGER	1	1				

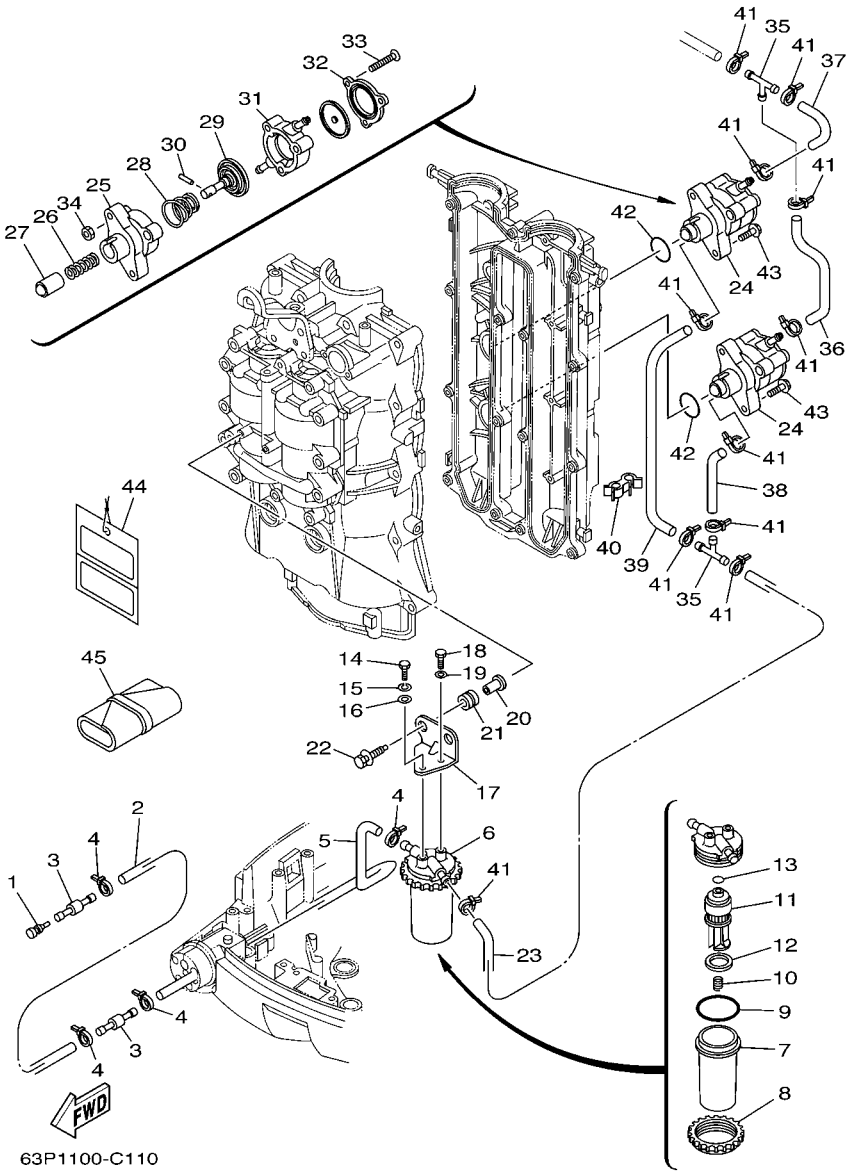

FIG. 11 FUEL 1

REF. NO.	PART NO.	DESCRIPTION	63P1	64P1				REMARKS
28	63P–24423–00	.SPRING, DIAPHRAGM	1	1				
29	68V–24411–00	.DIAPHRAGM	1	1				
30	68V–24374–00	.PIN	1	1				
31	68V–24413–00	.BODY 2	1	1				
32	68V–24414–00	.BODY 3	1	1				
33	68V–24444–00	.SCREW	3	3				
34	68V–24149–00	.NUT	3	3				
35	6E5–24378–00	PIPE, JOINT 3	2	2				
36	63P–24314–00	PIPE 4	1	1				
37	63P–24315–00	PIPE 5	1	1				
38	63P–24312–00	PIPE 2	1	1				
39	63P–24313–00	PIPE 3	1	1				
40	90464–12004	CLAMP	1	1				
41	90465–11M10	CLAMP	11	11				
42	93210–30682	O-RING	2	2				
43	90119–06M83	BOLT, WITH WASHER	4	4				
44	61H–2819R–31	TAG, WARNING	1	1				
45	67F–28100–01	TOOL KIT	1	1				AP

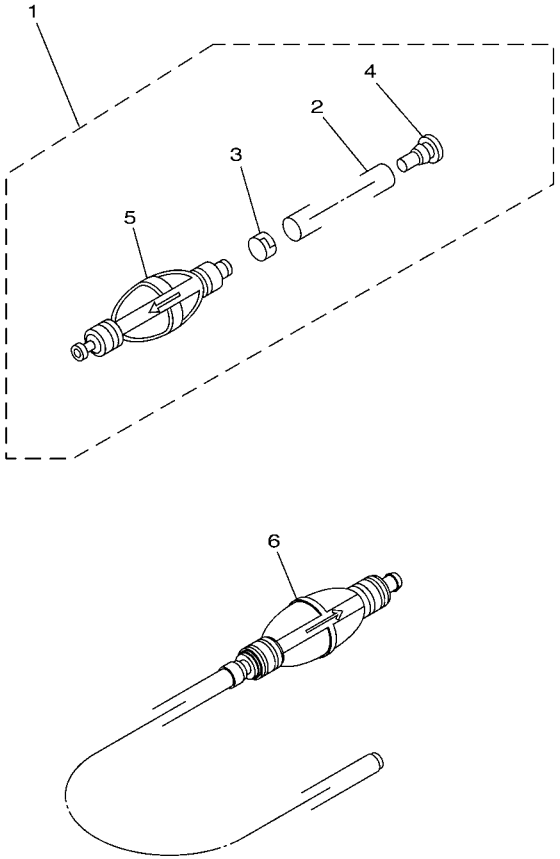

63P1100-C120

FIG. 12 FUEL 2

REF. NO.	PART NO.	DESCRIPTION	63P1	64P1				REMARKS
1	6Y2–24307–50	FUEL PIPE COMP. 2	1	1				AP
2	90445–13M01	.HOSE (L2050)	1	1				
3	6E5–24351–51	.BAND 1	1	1				
4	90480–06M19	.GROMMET	1	1				
5	6Y2–24360–60	.PRIMER PUMP ASSY	1	1				
6	6YK–24307–42	FUEL PIPE COMP. 2	1	1				AP FOR CAR(CE)

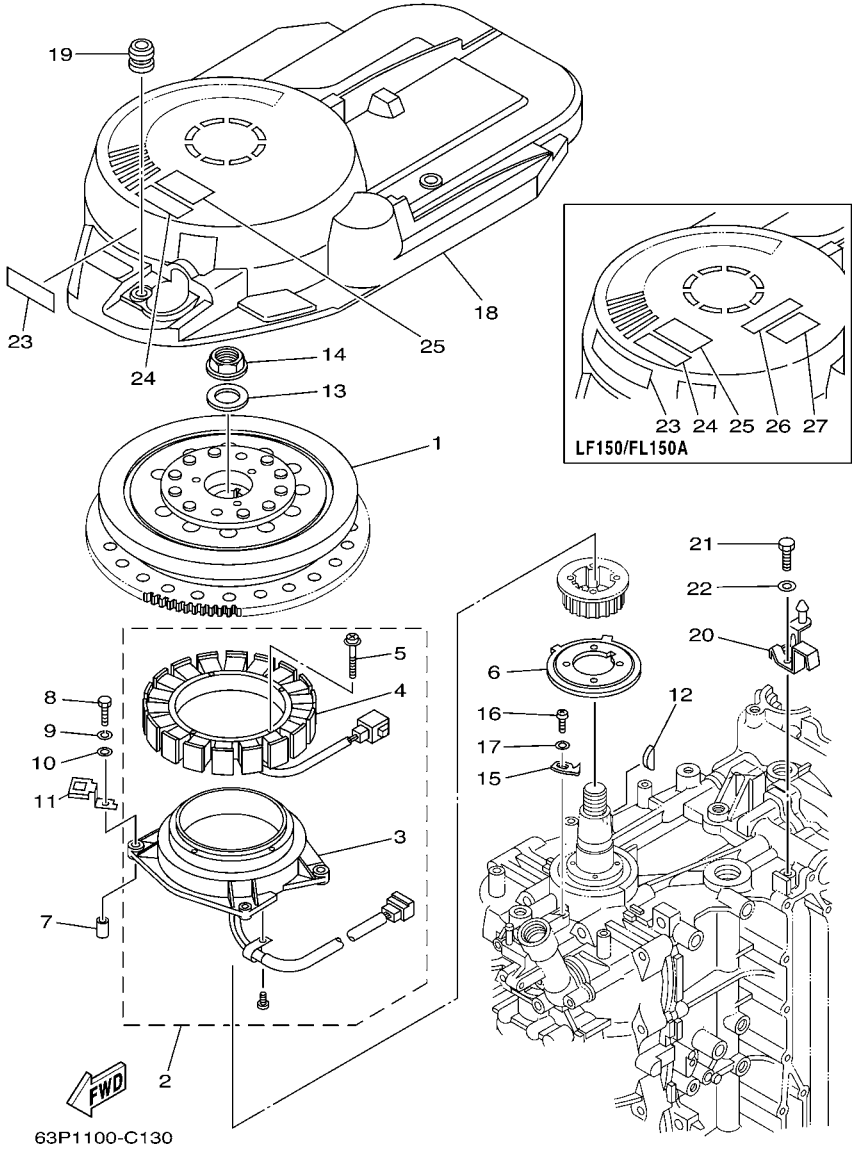

FIG. 13 GENERATOR

REF. NO.	PART NO.	DESCRIPTION	63P1	64P1				REMARKS
1	63P–81450–00	ROTOR ASSY	1	1				
2	63P–81460–00	BASE ASSY	1	1				
3	63P–85580–00	.COIL, PULSER	1	1				
4	63P–81410–00	.STATOR ASSY	1	1				
5	63D–81345–20	.SCREW, WITH WASHER (M6X30)	4	4				
6	63P–81673–00	ROTOR	1	1				
7	99530–08012	PIN, DOWEL	2	2				
8	97095–06035	BOLT	4	4				
9	92995–06100	WASHER, SPRING	4	4				
10	92995–06600	WASHER	4	4				
11	63P–81845–00	PLATE	2	2				
12	90280–05015	KEY, WOODRUFF	1	1				
13	90201–24014	WASHER, PLATE	1	1				
14	90179–24002	NUT	1	1				
15	67F–81332–00	PLATE, TIMING	1	1				
16	97885–06010	SCREW, PAN HEAD	1	1				
17	92995–06600	WASHER	1	1				
18	63P–81337–00	COVER, FLYWHEEL	1	1				
19	663–82317–01	DAMPER, IGNITION COIL	3	3				
20	63P–8132G–00	PLATE	1	1				
21	97095–06016	BOLT	1	1				
22	92995–06600	WASHER	1	1				
23	63P–13437–40	MARK, CAUTION	1	1				FOR USA,OCE
	63P–13437–50	MARK, CAUTION	1	1				FOR CAN
	63P–13437–60	MARK, CAUTION	1	1				FOR CAR
24	6A1–83625–41	MARK 5	1	1				
25	6A1–83625–51	MARK 5	1	1				FOR CAN,CAR

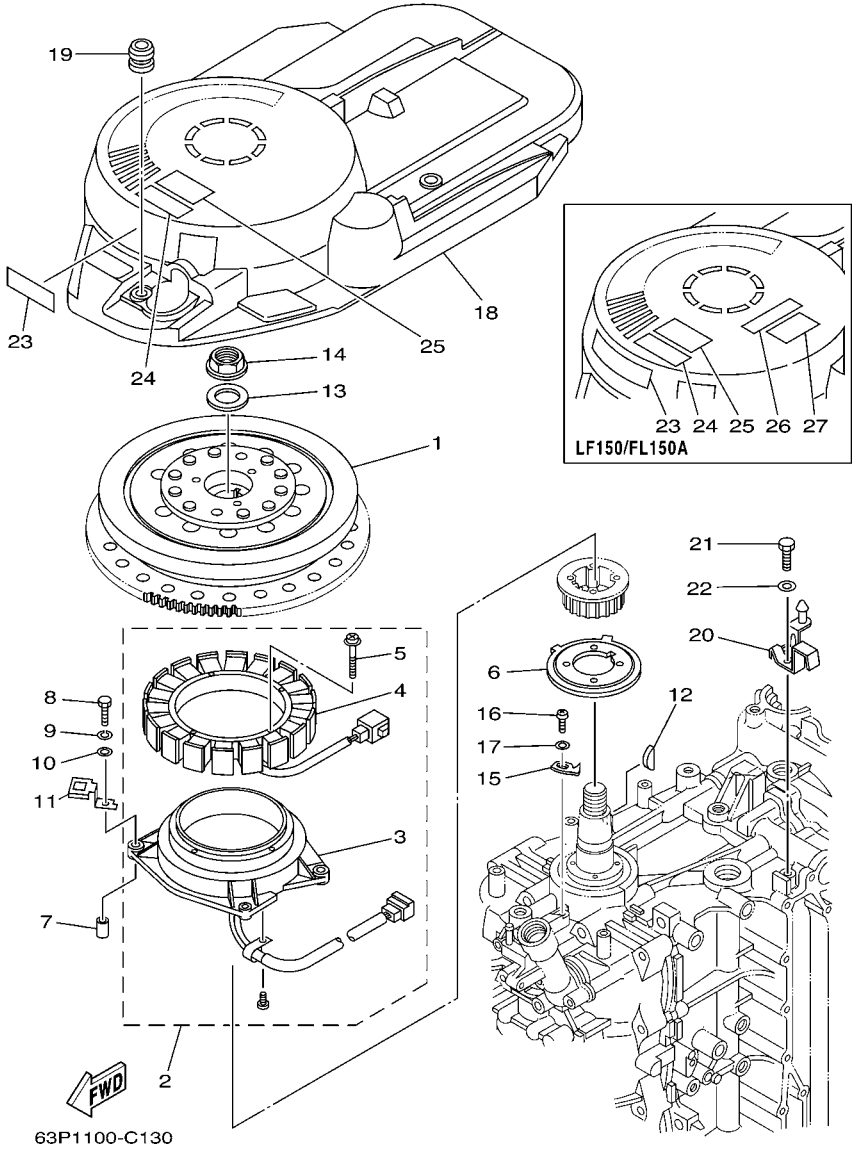

FIG. 13 GENERATOR

REF. NO.	PART NO.	DESCRIPTION	63P1	64P1				REMARKS
26	6K1–83623–41	MARK 3		1				
27	6K1–83623–50	MARK 3		1				FOR CAN,CAR

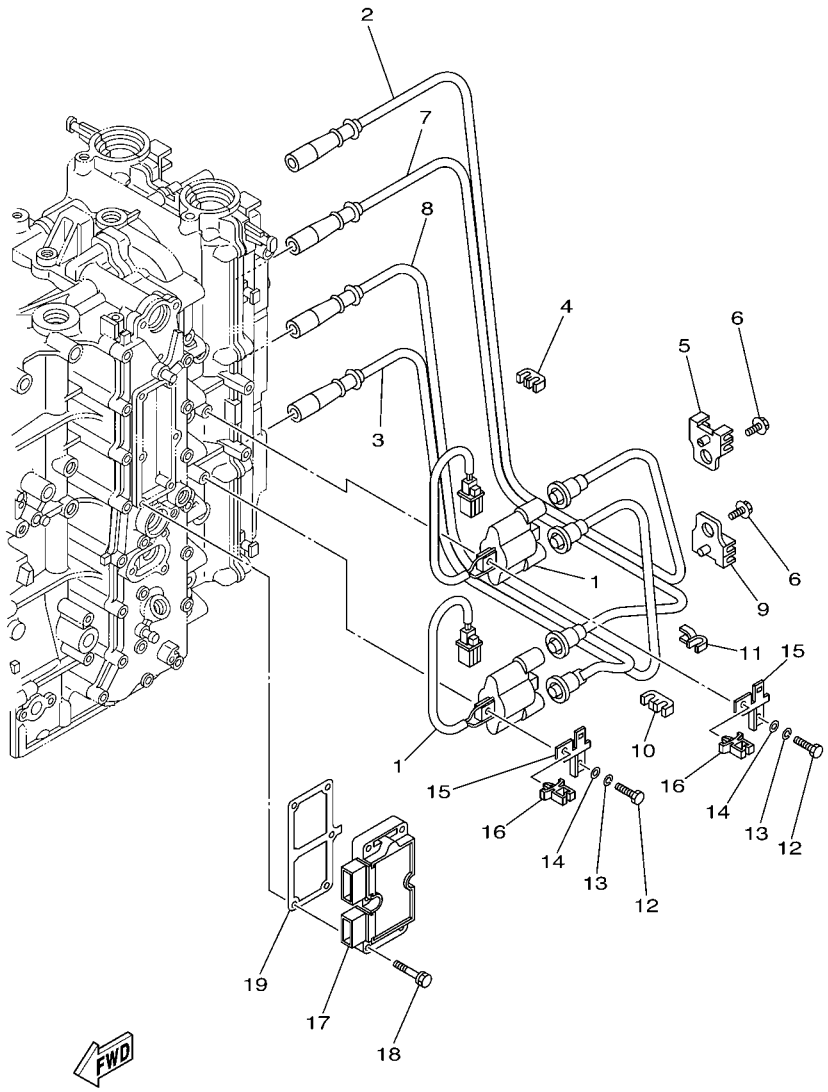

63P1010-C130

FIG. 14 ELECTRICAL 1

REF. NO.	PART NO.	DESCRIPTION	63P1	64P1				REMARKS
1	63P–82310–00	IGNITION COIL ASSY	2	2				
2	63P–82341–00	CORD, HIGH TENSION 1	1	1				
3	63P–82342–00	CORD, HIGH TENSION 2	1	1				
4	67F–82361–00	CLAMP, CORD	1	1				
5	67F–82362–00	CLAMP, CORD 2	1	1				
6	90119–06M73	BOLT, WITH WASHER	2	2				
7	63P–82343–00	CORD, HIGH TENSION 3	1	1				
8	63P–82344–00	CORD, HIGH TENSION 4	1	1				
9	67F–82362–00	CLAMP, CORD 2	1	1				
10	67F–82361–00	CLAMP, CORD	1	1				
11	90464–07M41	CLAMP	1	1				
12	97095–06025	BOLT	4	4				
13	92995–06100	WASHER, SPRING	4	4				
14	92995–06600	WASHER	4	4				
15	63P–82388–00	PLATE	2	2				
16	90464–11121	CLAMP	2	2				
17	63P–81960–00	RECTIFIER & REGULATOR ASSY	1	1				
18	90119–06MA4	BOLT, WITH WASHER	6	6				
19	63P–81975–00	PLATE, RECTIFIER FITTING	1	1				

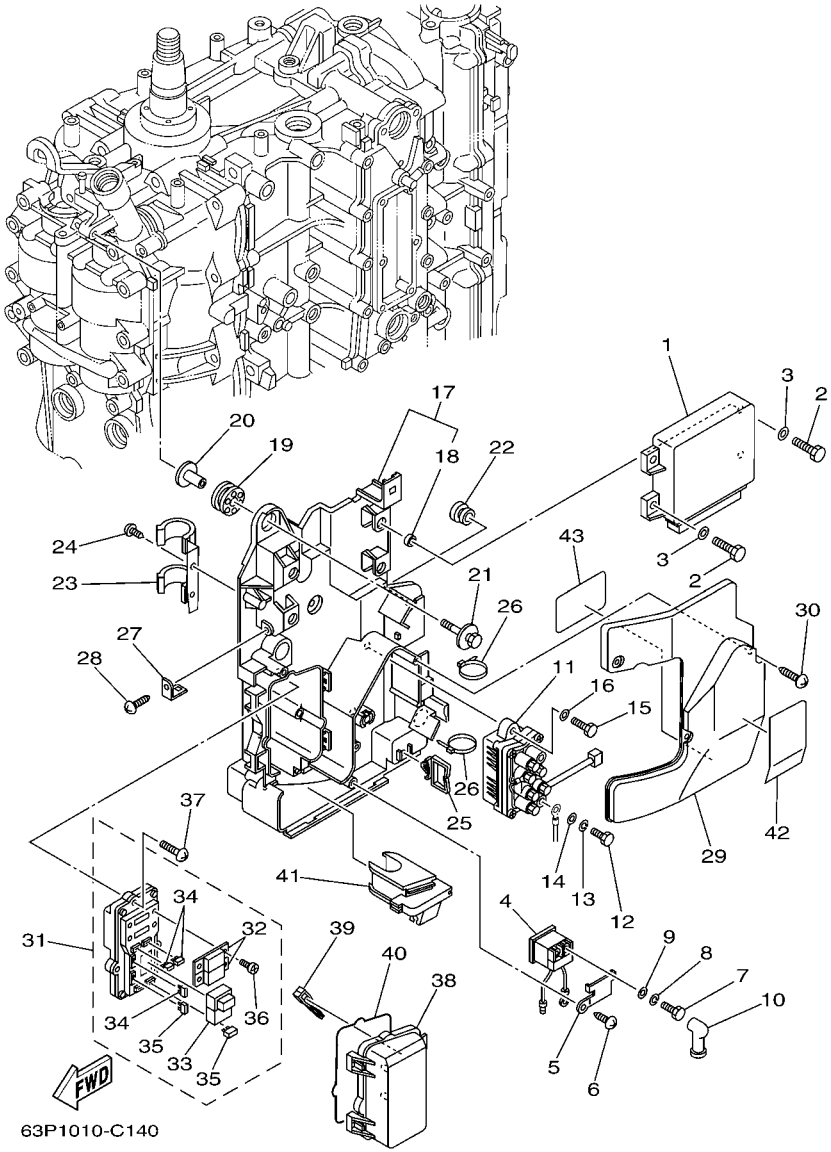

FIG. 15 ELECTRICAL 2

REF. NO.	PART NO.	DESCRIPTION	63P1	64P1				REMARKS
1	63P–8591A–10	ENGINE CONTROL UNIT ASSY	1	1				
	63P–8591A–00	ENGINE CONTROL UNIT ASSY	1	1				FOR CAR(CE)
2	97095–06016	BOLT	4	4				
3	92995–06600	WASHER	4	4				
4	68V–8194A–00	RELAY	1	1				
5	68V–81953–00	STAY, RELAY	1	1				
6	97780–60620	SCREW, TAPPING	1	1				
7	97095–06010	BOLT	2	2				
8	92995–06100	WASHER, SPRING	2	2				
9	92995–06600	WASHER	2	2				
10	6G5–82119–00	COVER, LEAD WIRE	2	2				
11	63P–81950–00	RELAY ASSY	1	1				
12	97095–06010	BOLT	2	2				
13	92995–06100	WASHER, SPRING	2	2				
14	92995–06600	WASHER	2	2				
15	97013–06020	BOLT	2	2				
16	92903–06600	WASHER, PLATE	2	2				
17	63P–81948–00	BRACKET	1	1				
18	90387–06010	.COLLAR	4	4				
19	68F–85516–01	SPACER	3	3				
20	68F–86129–00	COLLAR	3	3				
21	68F–85119–00	BOLT	3	3				
22	90480–10627	GROMMET	1	1				
23	63P–82594–00	CLAMP	1	1				
24	97780–60620	SCREW, TAPPING	1	1				
25	90464–23199	CLAMP	1	1				
26	90465–13M18	CLAMP	3	3				

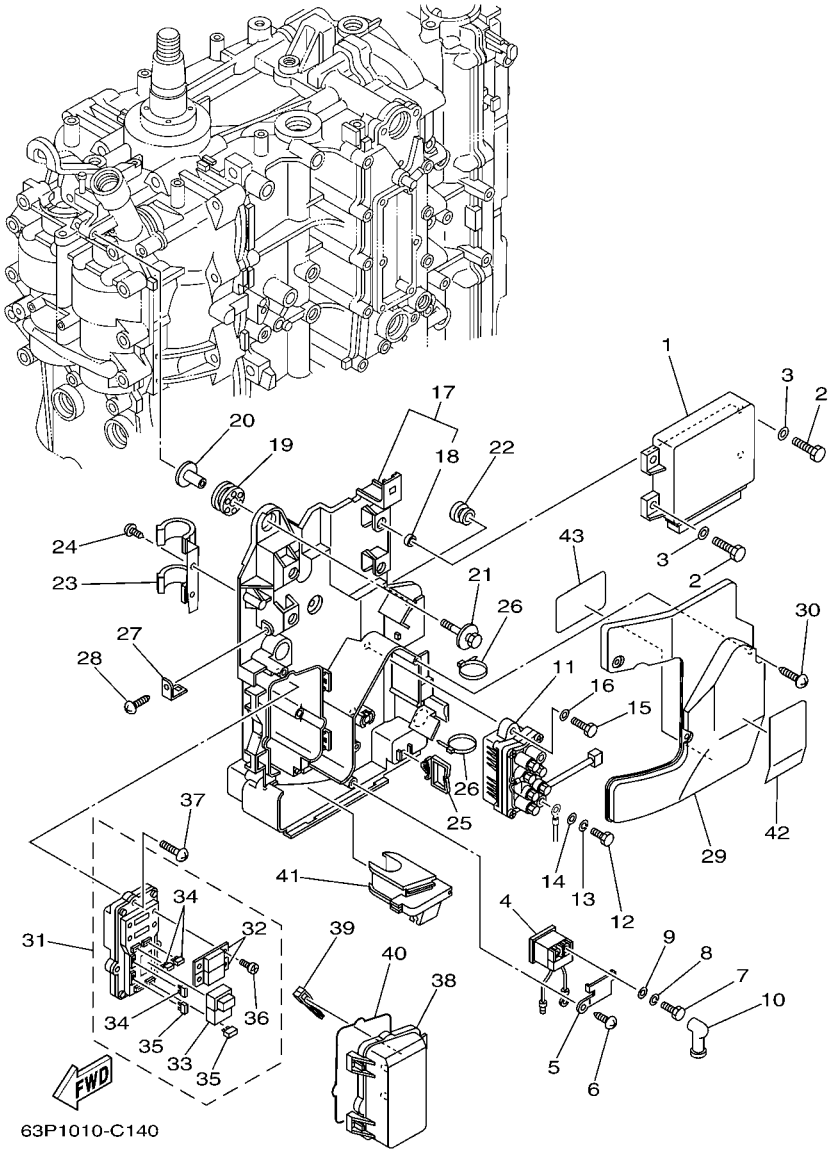

FIG. 15 ELECTRICAL 2

REF. NO.	PART NO.	DESCRIPTION	63P1	64P1				REMARKS
27	68V–85548–00	HOLDER	1	1				
28	97780–60620	SCREW, TAPPING	1	1				
29	63P–81942–00	COVER	1	1				
30	90169–05M00	SCREW, TRUSS HEAD TAPPING	3	3				
31	63P–82170–00	FUSE BOX ASSY	1	1				
32	63P–82151–00	.FUSE (50A)	2	2				
33	68F–8195A–00	.RELAY ASSY	1	1				
34	67F–82151–00	.FUSE (20A)	3	3				
35	67F–82151–10	.FUSE (30A)	2	2				
36	68F–82846–00	.SCREW, PAN HEAD (M5)	4	4				
37	97780–50620	SCREW, TAPPING	3	3				
38	60V–85544–00	CASE	1	1				
39	67F–2812A–00	PULLER, FUSE	1	1				
40	60V–82157–00	DAMPER	1	1				
41	63P–81336–00	GROMMET	1	1				
42	63P–81919–00	GRAPHIC, REGULATOR	1	1				
43	63P–81919–10	GRAPHIC, REGULATOR	1	1				

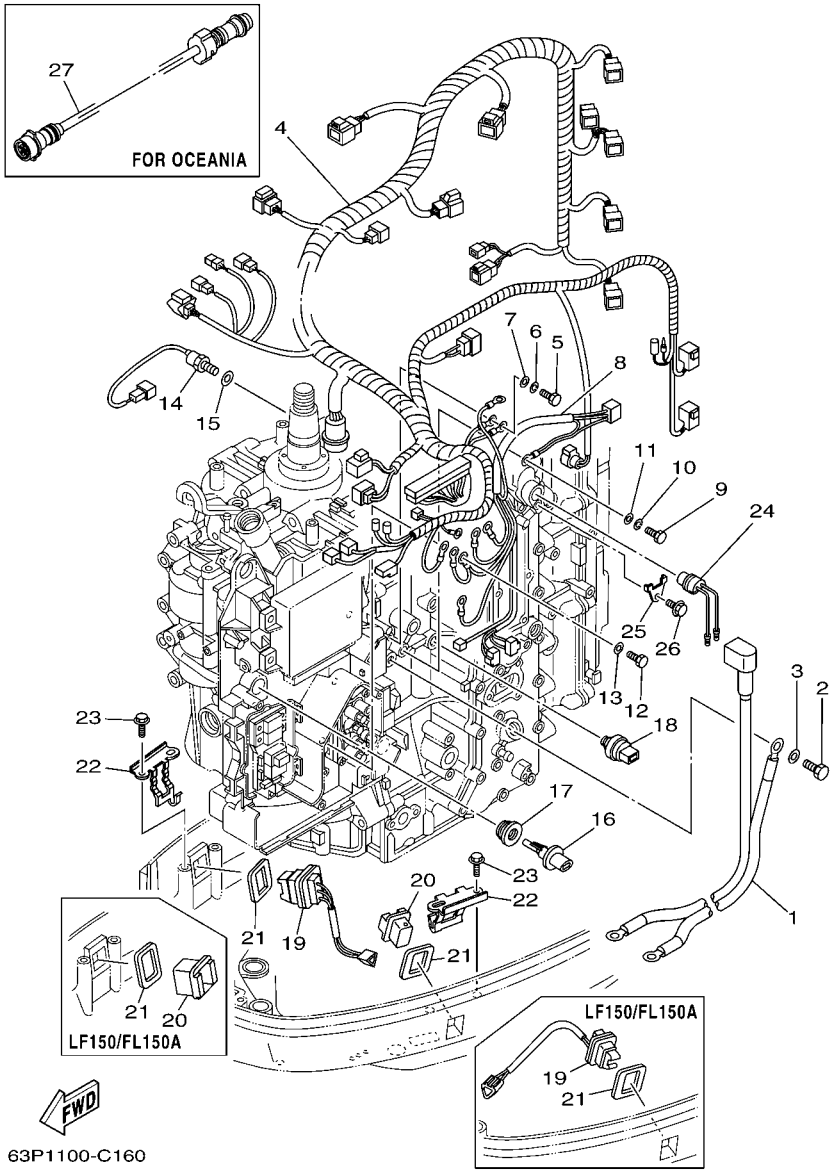

FIG. 16 ELECTRICAL 3

REF. NO.	PART NO.	DESCRIPTION	63P1	64P1				REMARKS
1	63P–82105–00	WIRE HARNESS	1	1				
2	97095–08016	BOLT	1	1				
3	92995–08600	WASHER	1	1				
4	63P–82590–10	WIRE HARNESS ASSY	1	1				FOR USA,CAN
	63P–82590–00	WIRE HARNESS ASSY	1	1				FOR OCE,CAR
5	97095–06020	BOLT	1	1				
6	92995–06100	WASHER, SPRING	1	1				
7	92995–06600	WASHER	1	1				
8	63P–8259M–00	WIRE HARNESS ASSY 2	1	1				
9	97095–06020	BOLT	1	1				
10	92995–06100	WASHER, SPRING	1	1				
11	92995–06600	WASHER	1	1				
12	97095–06012	BOLT	1	1				
13	92995–06600	WASHER	1	1				
14	61A–85790–00	THERMOSENSOR ASSY	1	1				
15	92990–10600	WASHER, PLATE	1	1				
16	63P–85886–00	SENSOR,AIR TEMPERATURE	1	1				
17	63P–14435–00	GROMMET	1	1				
18	69J–83651–00	SENDER, OIL PRESSURE	1	1				
19	69J–82563–00	TRIM & TILT SWITCH ASSY	1	1				
20	69J–42723–00–8D	COVER, BOTTOM	1	1				
21	69J–82587–00	GASKET	2	2				
22	63P–83614–00	BRACKET	2	2				
23	90109–06M86	BOLT	4	4				
24	69J–82560–00	THERMO SWITCH ASSY	1	1				
25	6E9–82588–00	PLATE	1	1				
26	90109–06M86	BOLT	1	1				

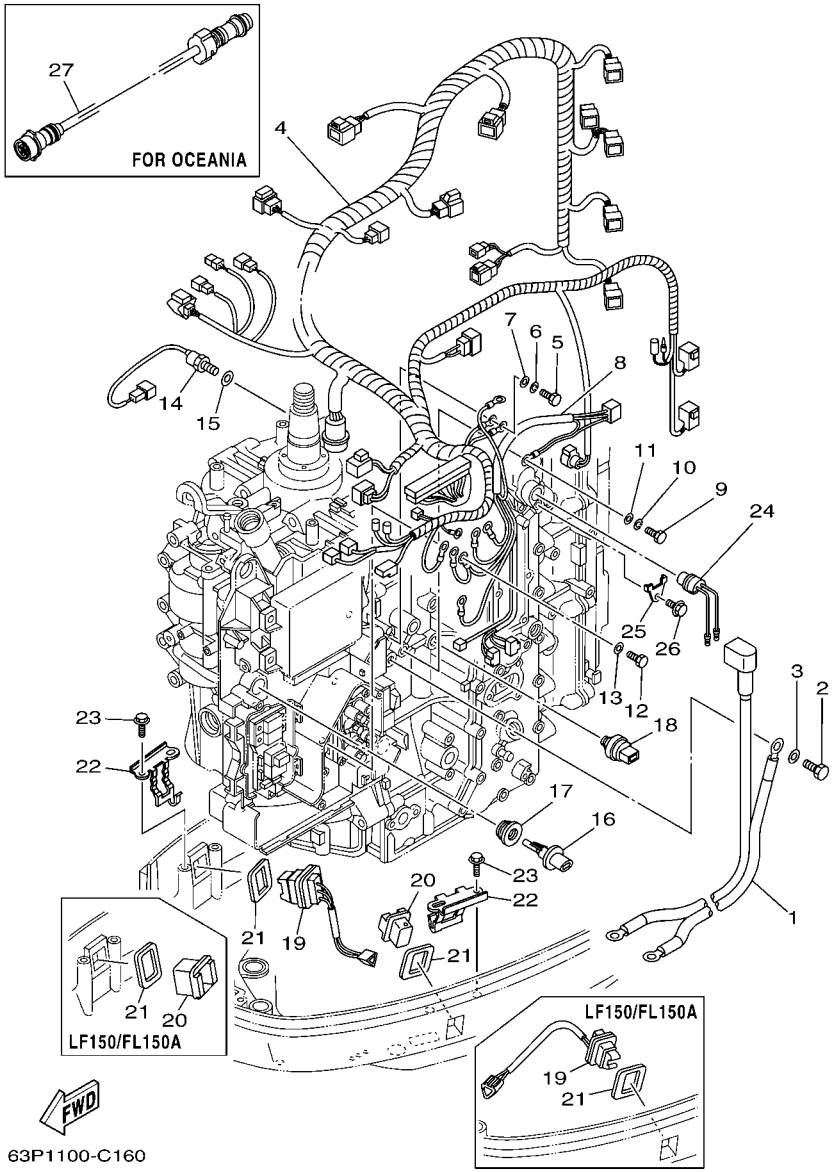

FIG. 16 ELECTRICAL 3

REF. NO.	PART NO.	DESCRIPTION	63P1	64P1				REMARKS
27	688–8258A–10	EXTENSION, WIRE HARNESS	1					FOR OCE

FIG. 17 STARTING MOTOR

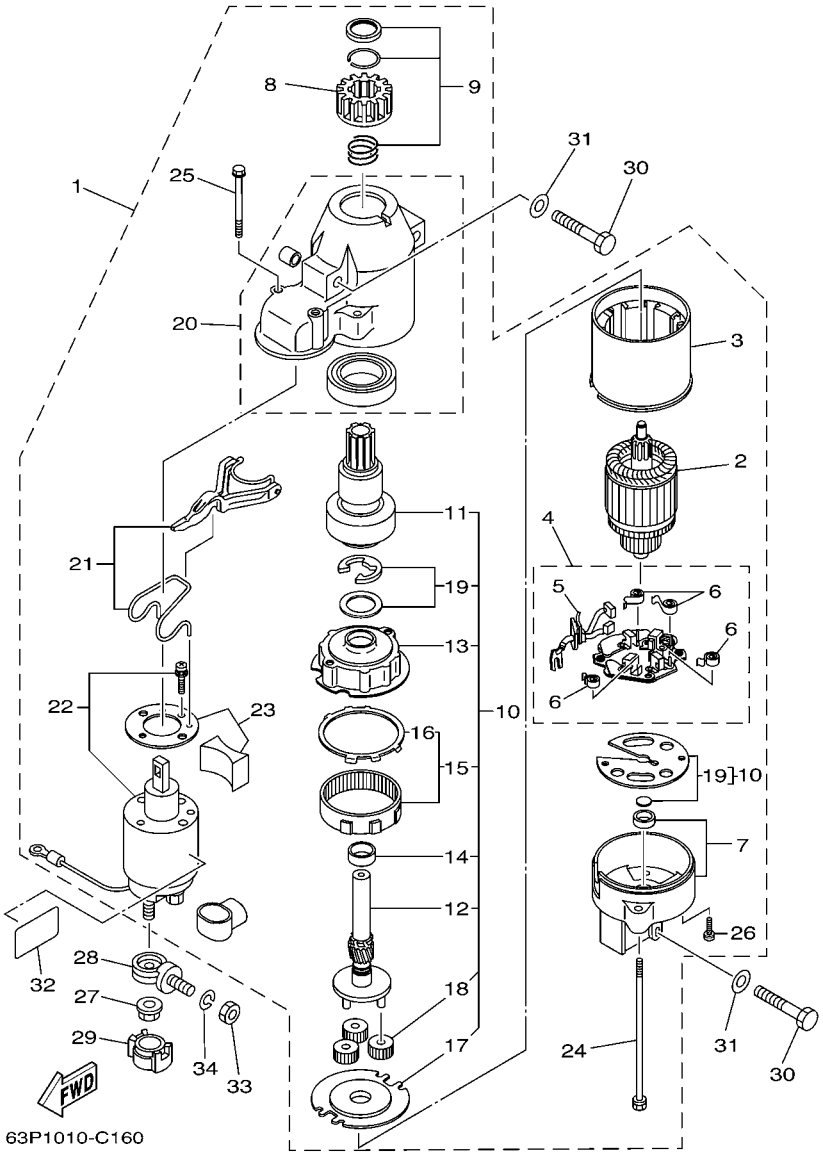

REF. NO.	PART NO.	DESCRIPTION	63P1	64P1				REMARKS
1	63P–81800–00	STARTING MOTOR ASSY	1	1				
2	67F–81850–00	.ARMATURE ASSY	1	1				
3	67F–81810–00	.STATOR ASSY	1	1				
4	69J–81840–00	.BRUSH HOLDER ASSY	1	1				
5	69J–81801–00	..BRUSH SET	1	1				
6	67F–81813–00	..SPRING, BRUSH	4	4				
7	68F–81820–00	.REAR BRACKET ASSY	1	1				
8	67F–81808–00	.PINION ASSY	1	1				
9	67F–81857–00	.PINION STOPPER SET	1	1				
10	67F–81807–00	.GEAR ASSY, STARTING MOTOR	1	1				
11	67F–81832–00	..CLUTCH, OVER RUN	1	1				
12	67F–81836–00	..SHAFT, PINION	1	1				
13	67F–81821–00	..BRACKET, CENTER 1	1	1				
14	67F–81841–00	..BEARING	1	1				
15	67F–81891–00	..GEAR, RING	1	1				
16	67F–8183R–00	...GASKET	1	1				
17	67F–81830–00	..BRACKET, CENTER 2	1	1				
18	60V–8183T–00	..GEAR, IDLER	3	3				
19	67F–81809–00	..WASHER KIT	1	1				
20	69J–81842–00	.COVER	1	1				
21	69J–81839–00	.LEVER ASSY	1	1				
22	63P–81941–00	.STARTER RELAY ASSY	1	1				
23	69J–81869–00	.COVER, DUST	1	1				
24	6K7–81826–10	.BOLT	2	2				
25	69J–81828–00	.BOLT 2	2	2				
26	67F–81846–00	.SCREW	2	2				
27	90179–08003	NUT	1	1				

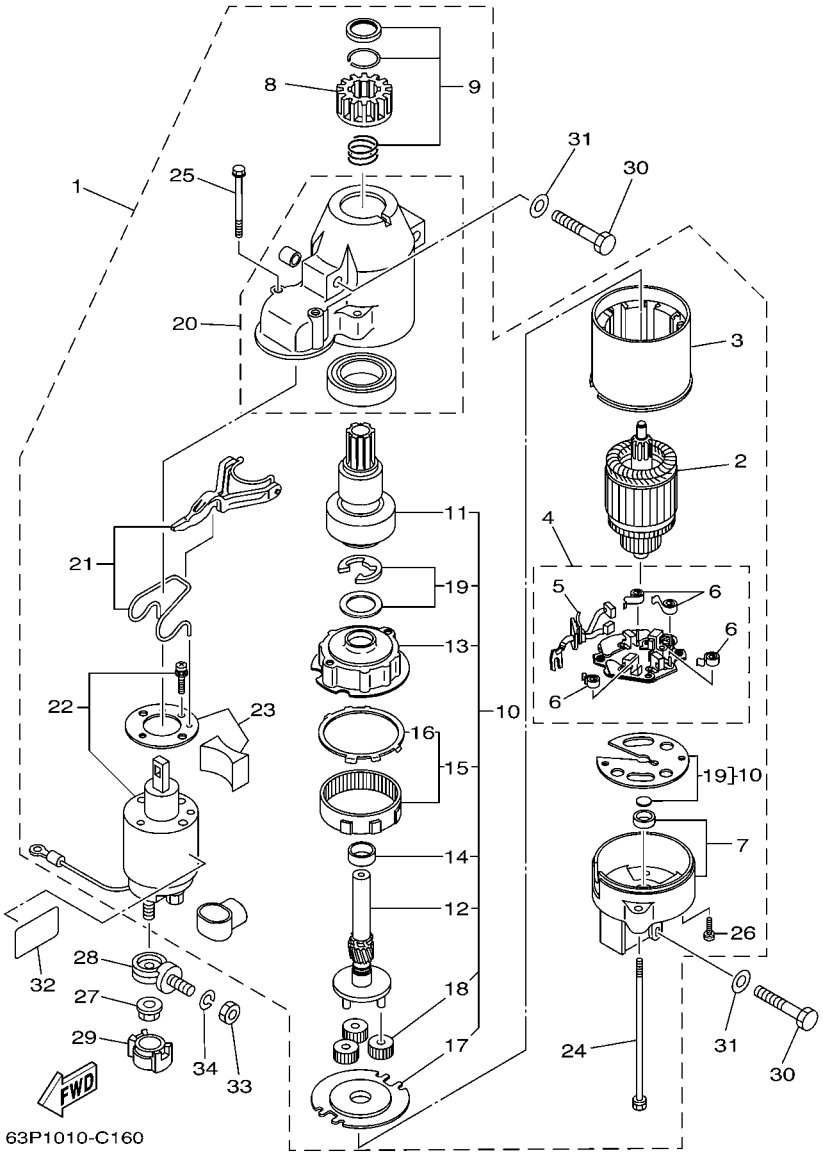

FIG. 17 STARTING MOTOR

REF. NO.	PART NO.	DESCRIPTION	63P1	64P1				REMARKS
28	60V–81925–00	TERMINAL	1	1				
29	68F–82582–00	COVER, WIRE HARNESS	1	1				
30	97013–08045	BOLT	3	3				
31	92903–08600	WASHER, PLATE	3	3				
32	67F–83627–01	LABEL, CAUTION 7	1	1				
33	95333–08600	NUT	1	1				
34	92903–08100	WASHER, SPRING	1	1				

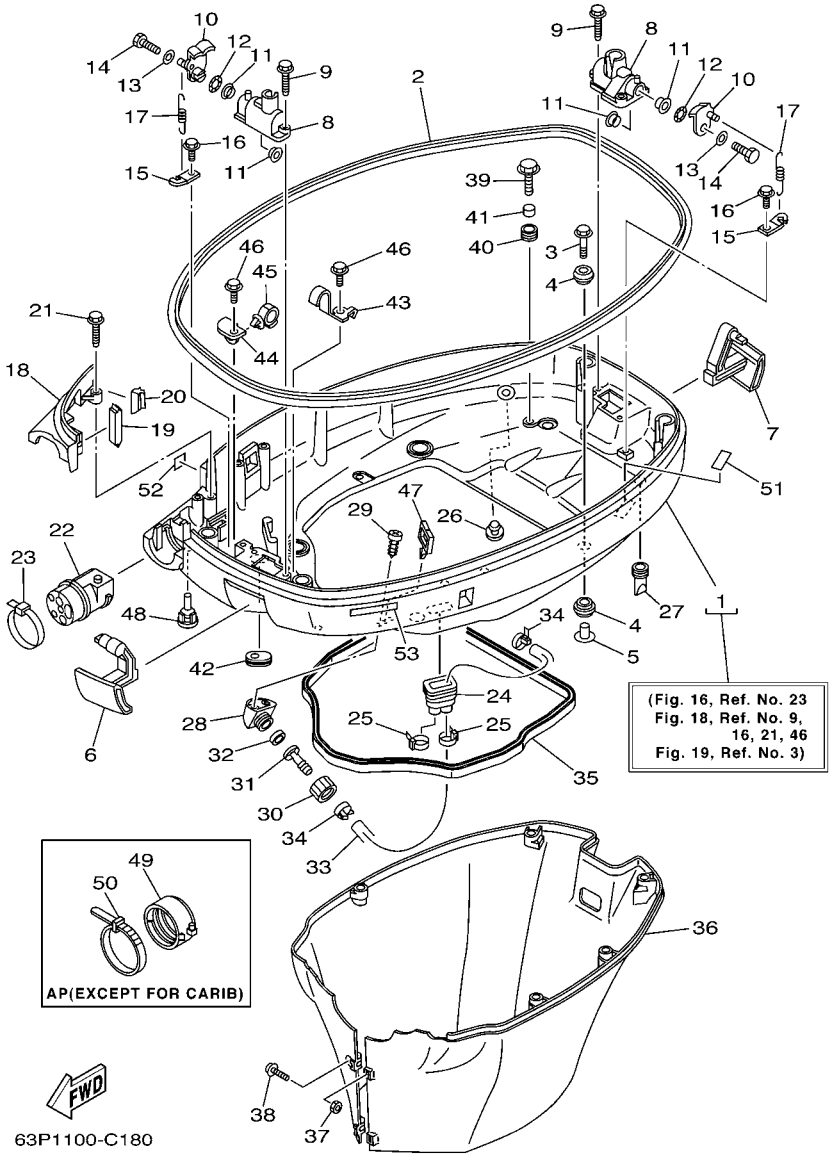

FIG. 18 BOTTOM COWLING

REF. NO.	PART NO.	DESCRIPTION	63P1	64P1				REMARKS
1	63P–42710–00–8D	BOTTOM COWLING ASSY	1	1				
2	63P–42615–00	SEAL	1	1				
3	90119–08M22	BOLT, WITH WASHER	4	4				
4	90480–22M81	GROMMET	8	8				
5	90387–08M37	COLLAR	4	4				
6	63P–42815–00–8D	LEVER, CLAMP	1	1				
7	63P–42816–00–8D	LEVER, CLAMP	1	1				
8	68F–42828–00–5B	PLATE, CLAMP	2	2				
9	90109–06M82	BOLT	4	4				
10	63P–42818–00	LEVER, CLAMP	2	2				
11	90386–15M73	BUSH	4	4				
12	90206–15M18	WASHER, WAVE	2	2				
13	90201–06068	WASHER, PLATE	2	2				
14	97095–06020	BOLT	2	2				
15	64D–43144–00	HOOK, SPRING	2	2				
16	90109–06M86	BOLT	2	2				
17	90506–16M34	SPRING, TENSION	2	2				
18	63P–42738–00–5B	PLATE, FITTING	1	1				
19	63P–42717–00	RUBBER, SEAL 2	1	1				
20	63P–42718–00	RUBBER, SEAL 3	1	1				
21	90109–06M82	BOLT	2	2				
22	63P–42725–00	GROMMET	1	1				
23	90465–13M30	CLAMP	1	1				FOR CAR
24	6H1–42726–21	GROMMET	1	1				
25	90465–11M10	CLAMP	2	2				
26	69J–44391–00	NIPPLE, HOSE	1	1				
27	61A–42717–00	RUBBER, SEAL 2	4	4				

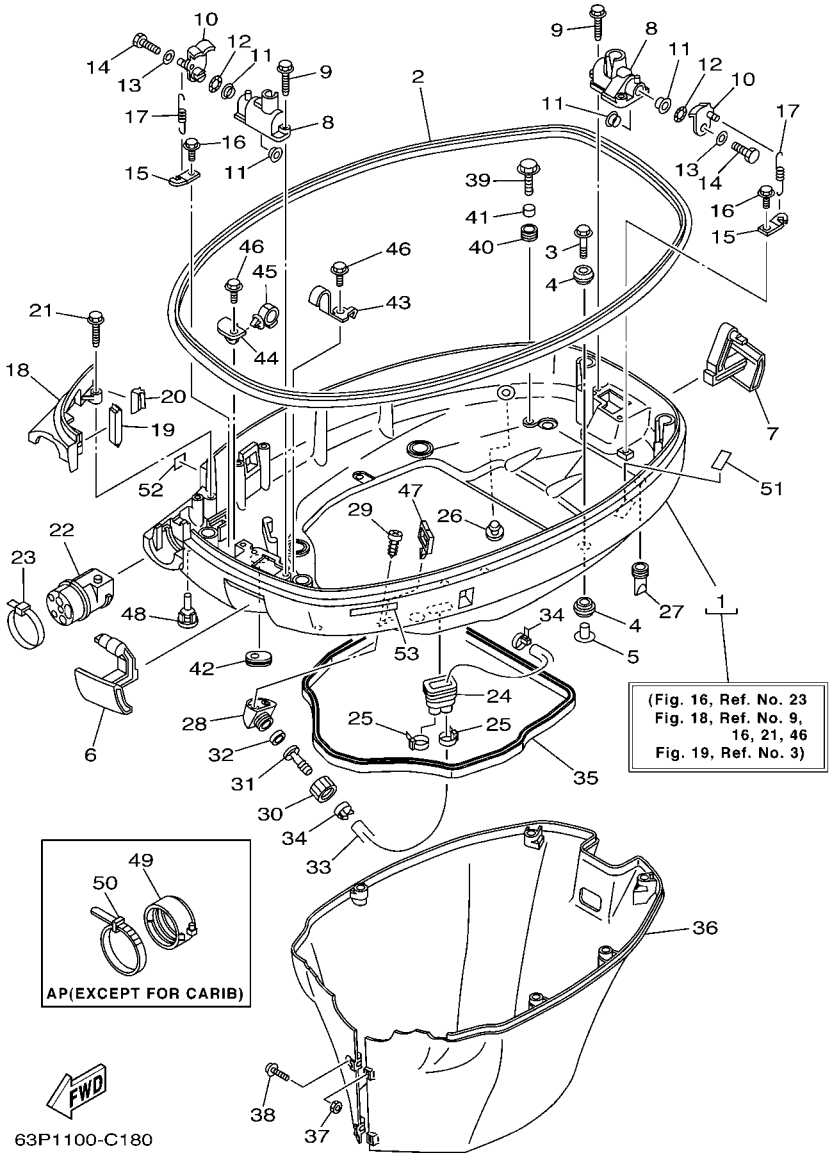

FIG. 18 BOTTOM COWLING

REF. NO.	PART NO.	DESCRIPTION	63P1	64P1				REMARKS
28	68T–12572–00	ADAPTER	1	1				
29	97780–60520	SCREW, TAPPING	2	2				
30	6R3–12581–00	JOINT, HOSE 1	1	1				
31	6R3–12582–00	JOINT, HOSE 2	1	1				
32	6R3–12583–00	GASKET, HOSE JOINT	1	1				
33	63P–42541–00	PIPE 1	1	1				
34	90465–11M10	CLAMP	2	2				
35	63P–42716–00	RUBBER, SEAL 1	1	1				
36	63P–42741–00–8D	APRON	1	1				
37	95380–06600	NUT, HEXAGON	2	2				
38	90159–06M28	SCREW, WITH WASHER	2	2				
39	90109–06M80	BOLT	4	4				
40	90480–13M24	GROMMET	4	4				
41	90387–06M43	COLLAR	4	4				
42	61A–42727–00	GROMMET	1	1				
43	63P–42811–00	STAY	1	1				
44	63P–42756–00	STAY, CLAMP	1	1				
45	90464–20181	CLAMP	1	1				
46	90109–06M86	BOLT	2	2				
47	90464–23199	CLAMP	1	1				
48	6H4–42748–00	GROMMET	2	2				
49	68F–42753–00	FASTNER	1	1				AP EXCEPT FOR CAR
50	90464–20258	CLAMP	1	1				AP EXCEPT FOR CAR
51	67F–82377–00	LABEL	1	1				
52	6A1–28176–00	LABEL, CAUTION	1	1				FOR CAR(CE)
53	6E3–8257H–00	PLATE, MARK	1	1				FOR CAR(CE)

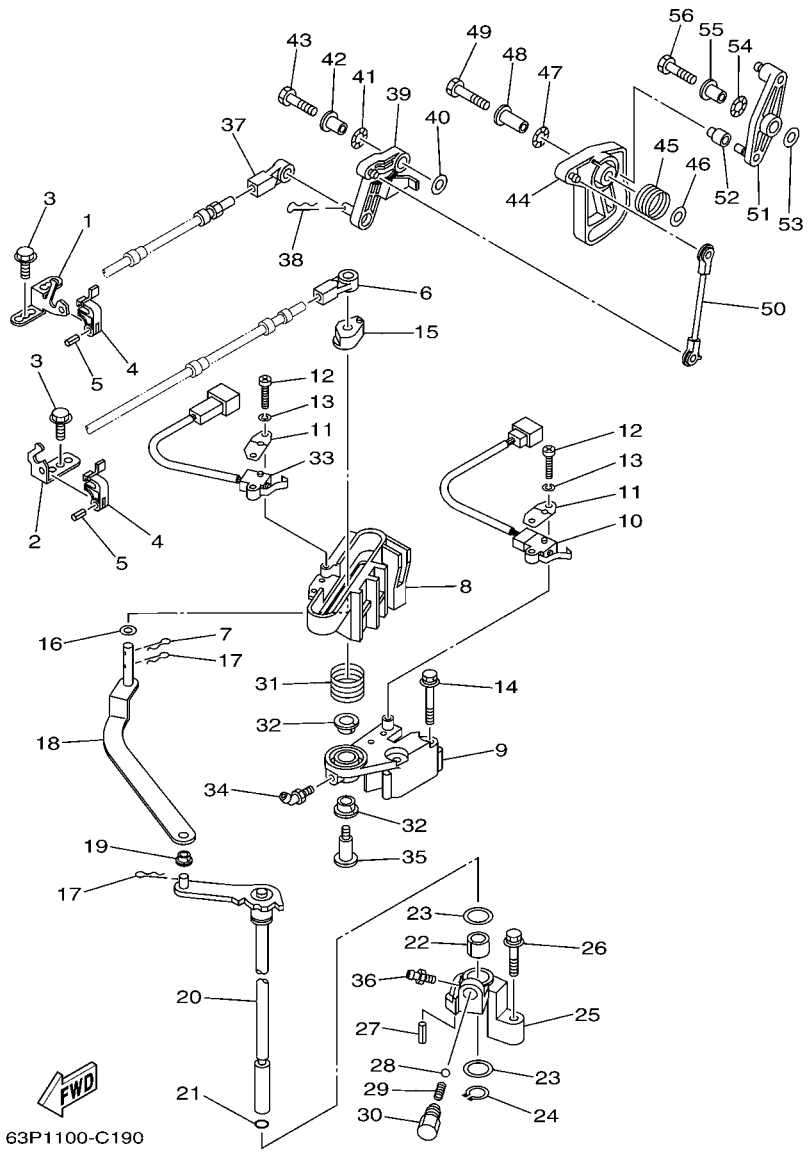

FIG. 19 CONTROL

REF. NO.	PART NO.	DESCRIPTION	63P1	64P1				REMARKS
1	63P–48531–00	BRACKET, REMOTE CONTROL 1	1	1				
2	63P–48532–00	BRACKET, REMOTE CONTROL 2	1	1				
3	90109–06M86	BOLT	3	3				
4	63P–48538–00	CLAMP, CABLE 1	2	2				
5	91690–30010	PIN, SPRING	2	2				
6	6E5–48344–00	CABLE END, REMOTE CONTROL	1	1				
7	90468–18008	CLIP	1	1				
8	63P–44176–00–1S	BRACKET	1	1				
9	63P–44117–00–1S	BRACKET	1	1				
10	69J–8259F–00	SWITCH ASSY	1	1				
11	61A–82588–01	PLATE	2	2				
12	97885–04016	SCREW, PAN HEAD	4	4				
13	92995–04100	WASHER	4	4				
14	97595–06550	BOLT, WITH WASHER	2	2				
15	63P–44122–00	BUSHING, SHIFT ROD LEVER	1	1				
16	90202–08M20	WASHER, PLATE	1	1				
17	90468–18008	CLIP	2	2				
18	63P–44121–00	LEVER, SHIFT ROD	1	1				
19	90386–06M12	BUSH	1	1				
20	63P–44120–00	HANDLE GEAR SHIFT ASSY	1	1				
21	93210–09165	O-RING	1	1				
22	90386–16M66	BUSH	1	1				
23	90202–16061	WASHER, PLATE	2	2				
24	93410–16006	CIRCLIP	1	1				
25	63P–44118–00–8D	BRACKET	1	1				
26	97575–06535	BOLT, WITH WASHER	1	1				
27	91690–30010	PIN, SPRING	1	1				

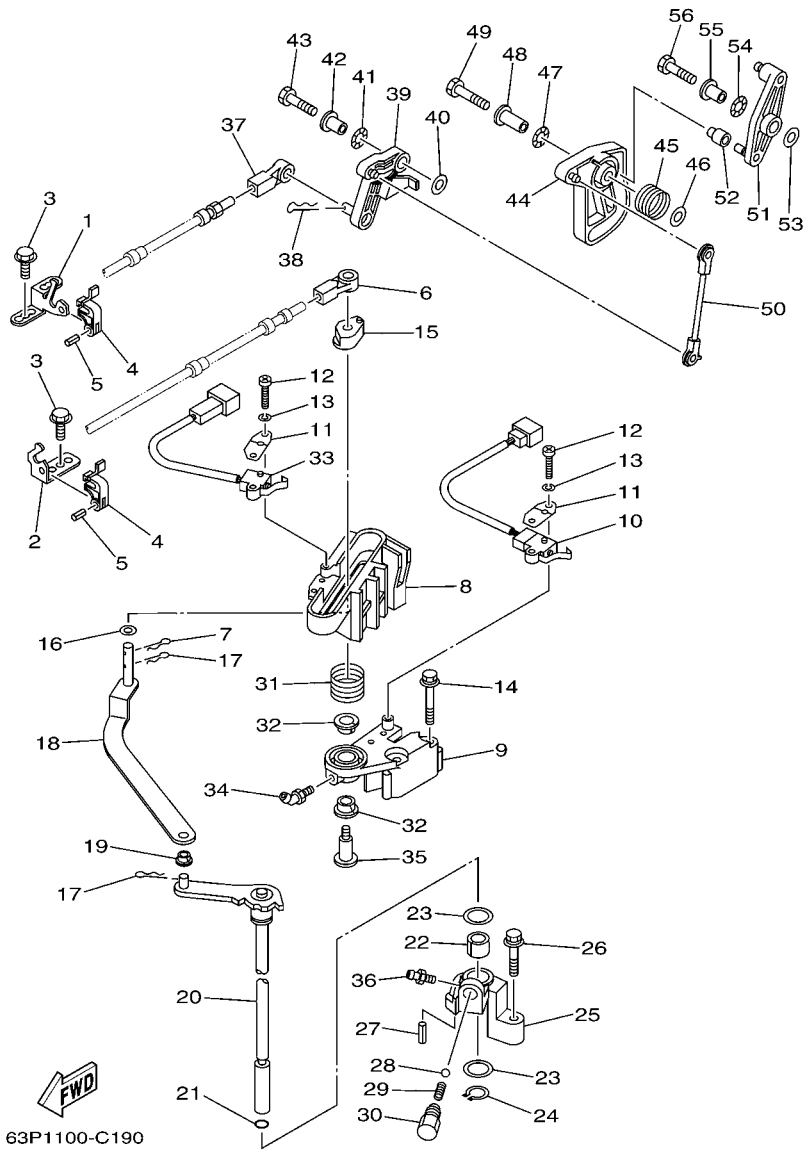

FIG. 19 CONTROL

REF. NO.	PART NO.	DESCRIPTION	63P1	64P1				REMARKS
28	93501–04M02	BALL	1	1				
29	90501–12082	SPRING, COMPRESSION	1	1				
30	648–42715–00	BUSHING	1	1				
31	90508–20M31	SPRING, TORSION	1	1				
32	90386–12069	BUSH	2	2				
33	60V–8259F–00	SWITCH ASSY	1	1				
34	93700–06M01	NIPPLE, GREASE	1	1				
35	90109–08019	BOLT	1	1				
36	93700–06M03	NIPPLE, GREASE	1	1				
37	6E5–48344–00	CABLE END, REMOTE CONTROL	1	1				
38	90468–18008	CLIP	1	1				
39	63P–42154–00	LEVER, THROTTLE CONTROL	1	1				
40	90201–06M31	WASHER, PLATE	1	1				
41	90206–10M04	WASHER, WAVE	1	1				
42	90387–06M29	COLLAR	1	1				
43	97095–06025	BOLT	1	1				
44	63P–41213–00	CAM, ACCEL.	1	1				
45	69J–44135–00	SPRING	1	1				
46	90201–06M31	WASHER, PLATE	1	1				
47	90206–10M04	WASHER, WAVE	1	1				
48	90387–06M82	COLLAR	1	1				
49	97095–06035	BOLT	1	1				
50	63P–41237–00	JOINT, LINK	1	1				
51	63P–42157–00	LEVER, THROTTLE	1	1				
52	68V–42171–00	BUSHING	1	1				
53	90201–06M31	WASHER, PLATE	1	1				
54	90206–10M04	WASHER, WAVE	1	1				

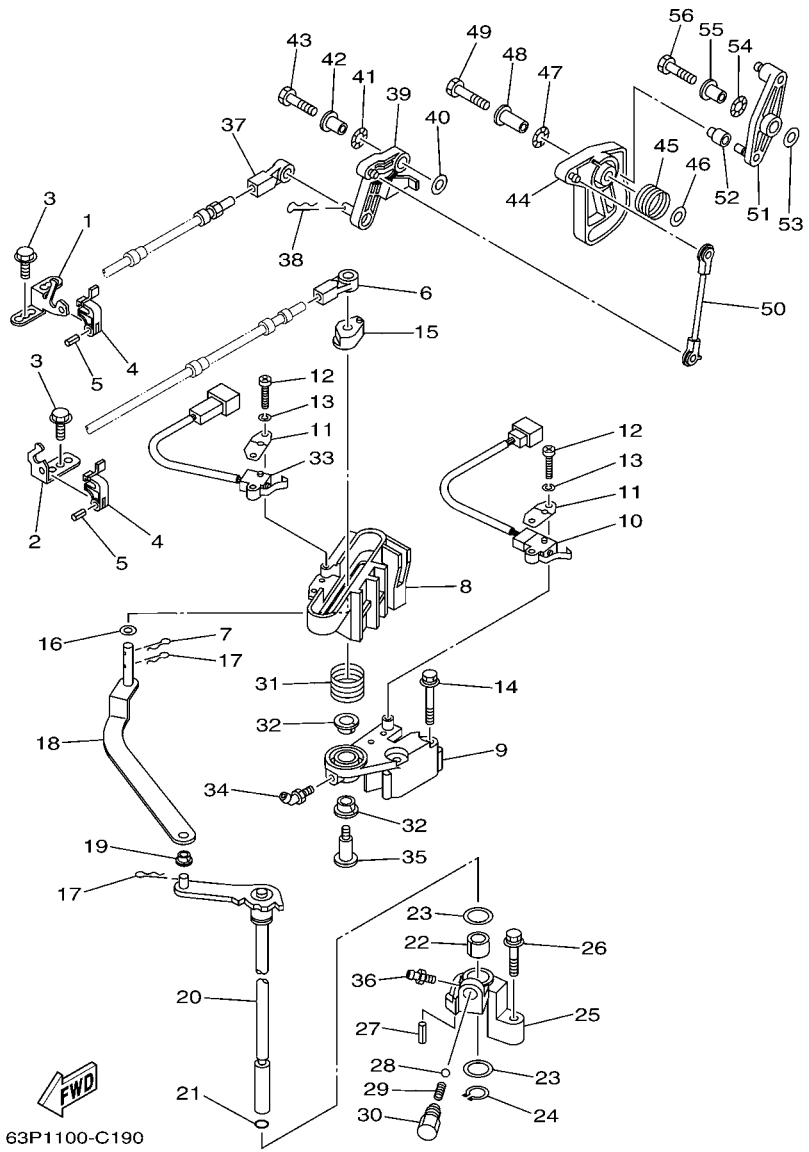

FIG. 19 CONTROL

REF. NO.	PART NO.	DESCRIPTION	63P1	64P1				REMARKS
55	90387–06M29	COLLAR	1	1				
56	97095–06025	BOLT	1	1				

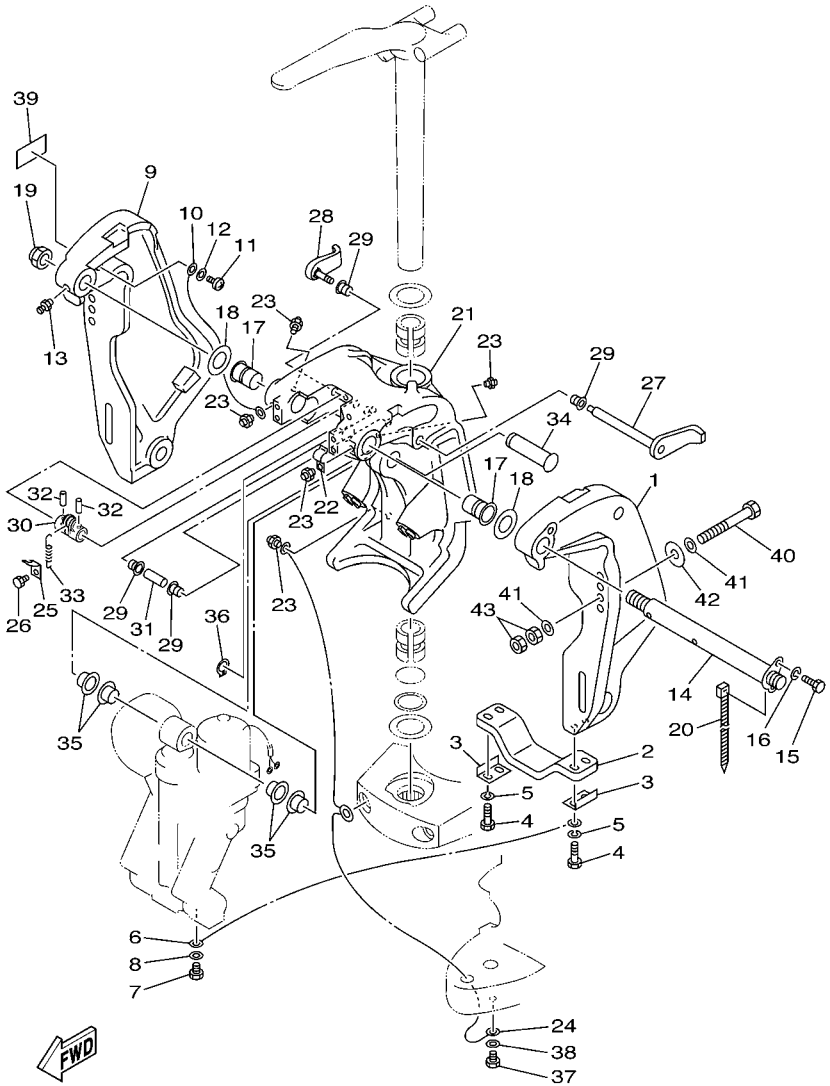

FIG. 20 BRACKET 1

REF. NO.	PART NO.	DESCRIPTION	63P1	64P1				REMARKS
1	64E–43111–02–8D	BRACKET, CLAMP	1	1				
2	6G5–45251–02	ANODE	1	1				
3	6G5–44526–00	PLATE	2	2				
4	97095–06030	BOLT	4	4				
5	92995–06100	WASHER, SPRING	4	4				
6	6E5–82148–00	WIRE, LEAD 4	1	1				
7	97095–06010	BOLT	1	1				
8	92995–06600	WASHER	1	1				
9	64E–43112–02–8D	BRACKET, CLAMP	1	1				
10	6E5–82148–00	WIRE, LEAD 4	1	1				
11	97880–06012	SCREW, PAN HEAD	1	1				
12	92990–06600	WASHER, PLATE	1	1				
13	93700–06M03	NIPPLE, GREASE	1	1				
14	64E–43131–01	BOLT, CLAMP BRACKET	1	1				
15	97095–08020	BOLT	1	1				
16	92995–08100	WASHER	1	1				
17	90386–25M31	BUSH	2	2				
18	90201–26M59	WASHER, PLATE	2	2				
19	90185–22M11	NUT, SELF-LOCKING	1	1				
20	90465–11M10	CLAMP	1	1				
21	64E–43311–10–8D	BRACKET, SWIVEL 1	1	1				
22	90465–08M63	CLAMP	1	1				
23	93700–06M03	NIPPLE, GREASE	5	5				
24	66K–82149–00	WIRE, LEAD 3	1	1				
25	6G5–43144–00	HOOK, SPRING	1	1				
26	97095–06010	BOLT	1	1				
27	6G5–43181–02	LEVER, TILT STOP	1	1				

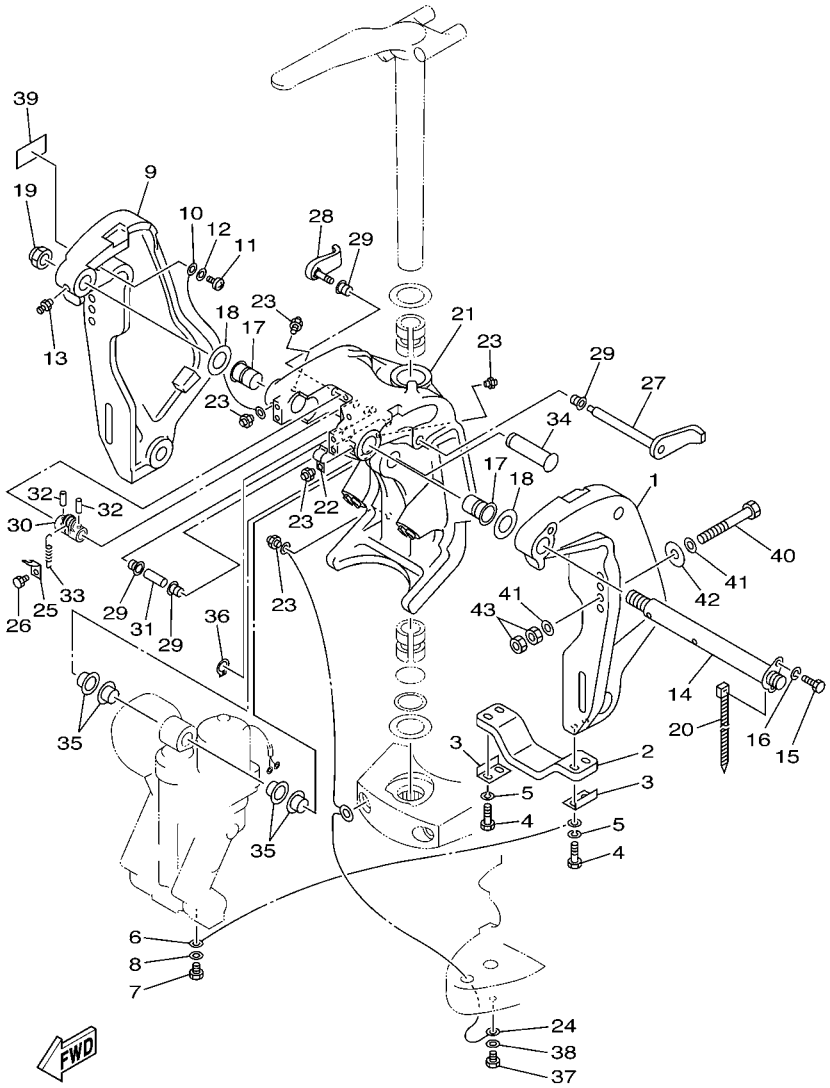

FIG. 20 BRACKET 1

REF. NO.	PART NO.	DESCRIPTION	63P1	64P1				REMARKS
28	6G5–43185–02	LEVER, TILT STOP	1	1				
29	90386–10M16	BUSH	4	4				
30	6G5–43148–10	COLLAR, DISTANCE	1	1				
31	90387–10M05	COLLAR	1	1				
32	91690–30020	PIN, SPRING	2	2				
33	90506–20011	SPRING, TENSION	1	1				
34	64E–43126–00	PIN, UPPER SHOCK MOUNT	1	1				
35	90386–22M98	BUSH	4	4				
36	93410–22M11	CIRCLIP	1	1				
37	97095–06010	BOLT	1	1				
38	92995–06600	WASHER	1	1				
39	63V–82377–50	LABEL (SPARK,IGNITION)	1	1				FOR CAN
40	90101–12M05	BOLT (L:130MM)	4	4				UR
	90101–12M77	BOLT (L:150MM)	2	2				UR EXCEPT FOR CAR
41	90201–13M01	WASHER, PLATE	8	8				
42	90201–12M05	WASHER, PLATE	4	4				
43	95380–12600	NUT	8	8				

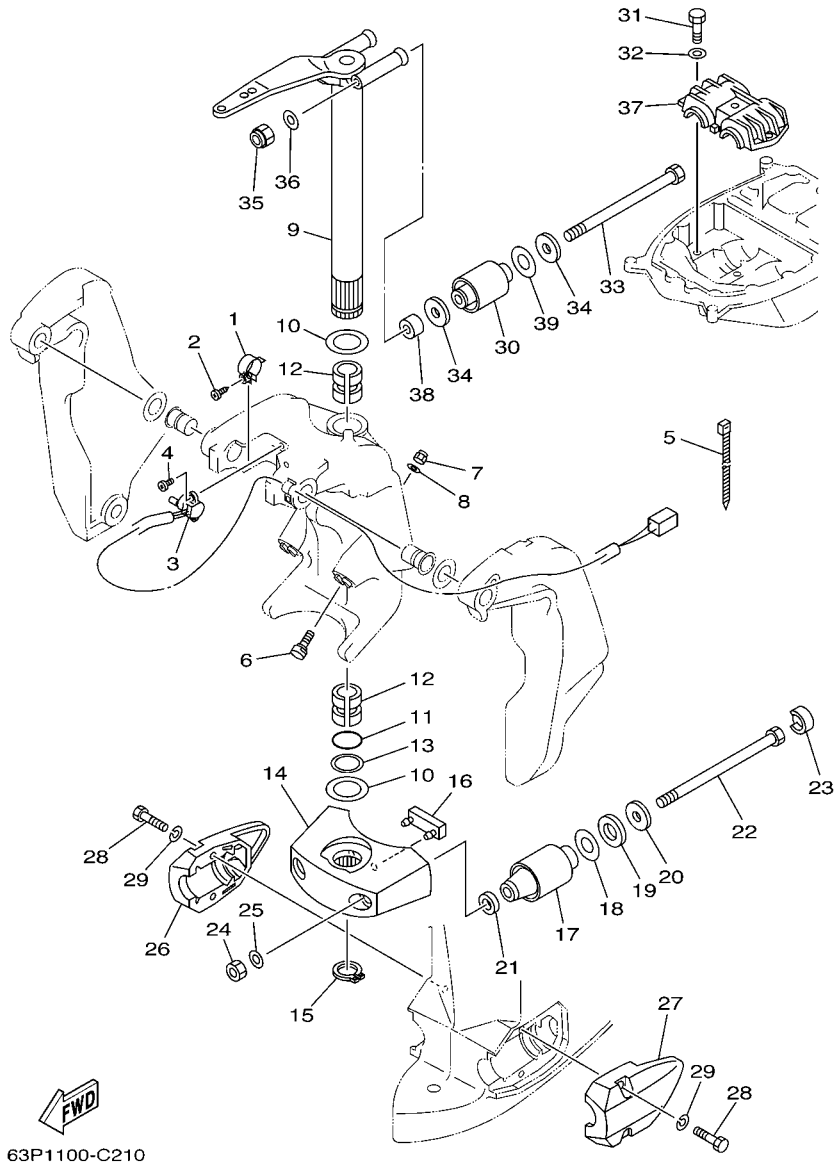

FIG. 21 BRACKET 2

REF. NO.	PART NO.	DESCRIPTION	63P1	64P1				REMARKS
1	64E–43139–02	CAM, TRIM SENDER	1	1				
2	97780–60525	SCREW, TAPPING	1	1				
3	67H–83672–00	TRIM SENDER	1	1				FOR USA,CAN
	64E–83672–02	TRIM SENDER	1	1				FOR OCE,CAR
4	97885–06016	SCREW, PAN HEAD	2	2				
5	90465–11M10	CLAMP	3	3				
6	63P–43376–00	BOLT, THRUST RECEIVER	2	2				
7	95780–10300	NUT, FLANGE	2	2				
8	92995–10600	WASHER	2	2				
9	66K–42510–01–8D	STEERING BRACKET ASSY	1	1				
10	90201–38M60	WASHER, PLATE	2	2				
11	93210–37MH7	O-RING	1	1				
12	90386–38M32	BUSH	2	2				
13	90202–40M47	WASHER, PLATE	1	1				
14	68V–44551–00–8D	HOUSING, LOWER MOUNT RUBBER	1	1				
15	93410–37M04	CIRCLIP	1	1				
16	61A–44575–00	DAMPER, LOWER MOUNT RUBBER	1	1				
17	60V–44555–00–94	MOUNT DAMPER, LOWER SIDE	2					L
	63P–44555–00–94	MOUNT DAMPER, LOWER SIDE	2	2				X
18	90201–35008	WASHER, PLATE	2	2				
19	90202–32M19	WASHER, PLATE	2	2				
20	90201–16M55	WASHER, PLATE	2	2				
21	90201–15M58	WASHER, PLATE	2	2				
22	90109–14MA7	BOLT	2	2				
23	69J–44533–00	DAMPER, UPPER MOUNT RUBBER	2	2				
24	95380–14600	NUT	2	2				
25	92995–14600	WASHER	2	2				

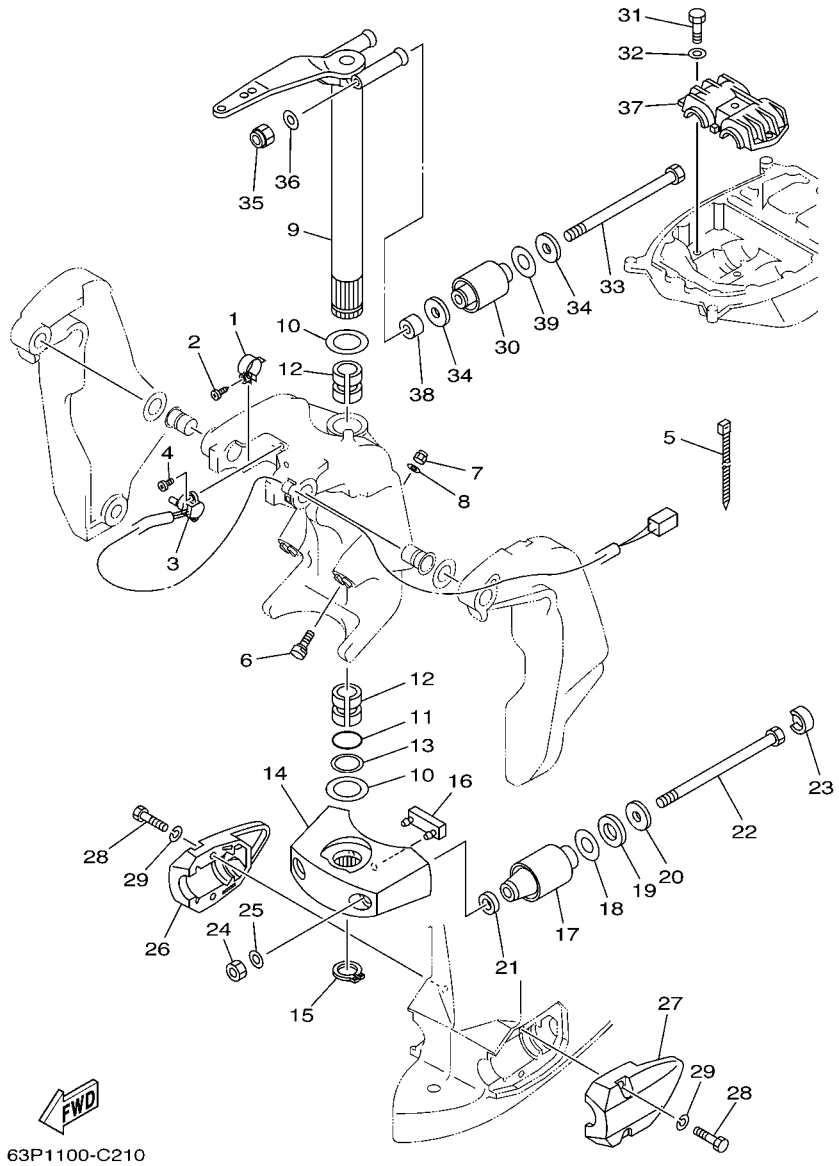

FIG. 21 BRACKET 2

REF. NO.	PART NO.	DESCRIPTION	63P1	64P1				REMARKS
26	63P–44553–00–8D	COVER, LOWER MOUNT	1	1				
27	63P–44556–00–8D	COVER, LOWER MOUNT 2	1	1				
28	97075–10040	BOLT	4	4				
29	92995–10100	WASHER	4	4				
30	63P–44514–00–94	MOUNT DAMPER, UPPER SIDE	2	2				
31	97075–10045	BOLT	3	3				
32	92995–10600	WASHER	3	3				
33	90109–14M48	BOLT	2	2				
34	90201–16M01	WASHER, PLATE	4	4				
35	90185–14M00	NUT, SELF-LOCKING	2	2				
36	92995–14600	WASHER	2	2				
37	63P–44511–00–94	COVER, UPPER MOUNT	1	1				
38	90387–14004	COLLAR	2	2				
39	90202–28001	WASHER, PLATE	2	2				

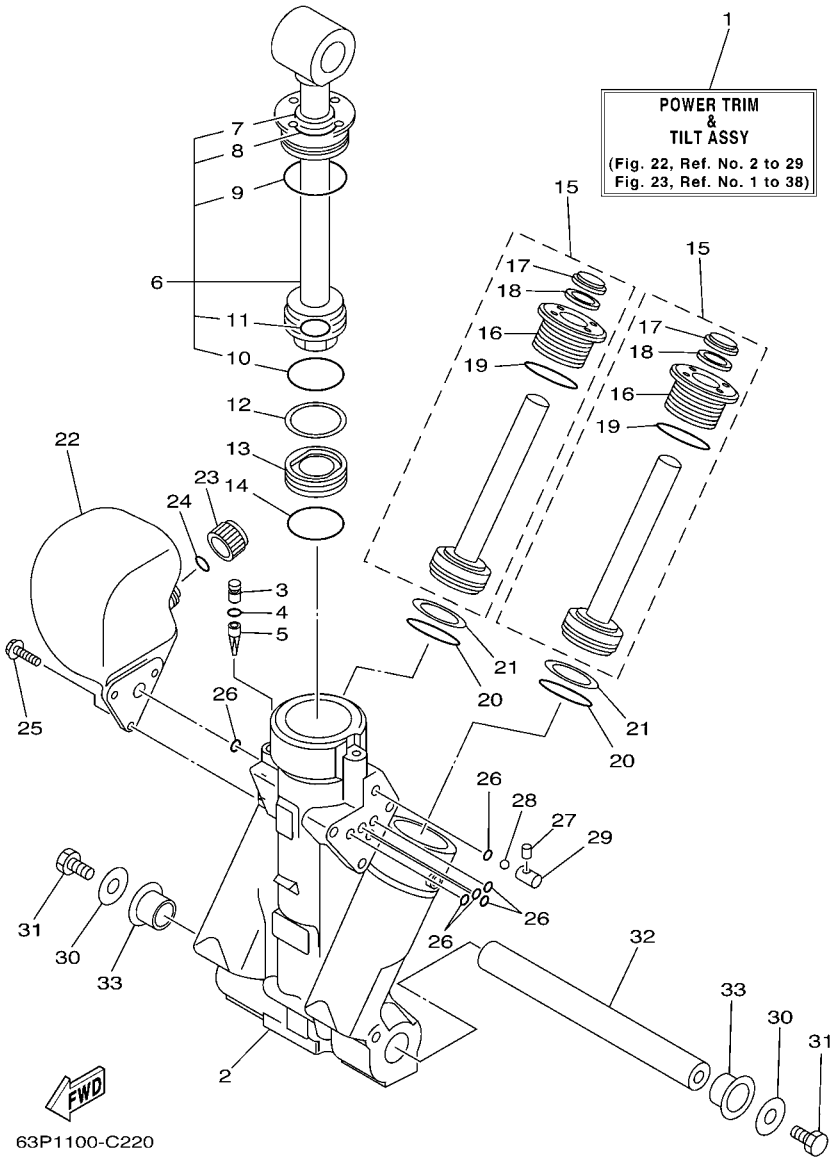

FIG. 22 POWER TRIM & TILT ASSY 1

REF. NO.	PART NO.	DESCRIPTION	63P1	64P1				REMARKS
1	63P–43800–00–4D	POWER TRIM & TILT ASSY	1	1				
2	64E–43825–01	HOUSING, TRIM & TILT	1	1				
3	64E–4388J–00	PLUG 2	1	1				
4	93210–10M74	O-RING	1	1				
5	64E–43817–00	FILTER 2	1	1				
6	63P–43810–00	TILT PISTON SUB ASSY	1	1				
7	64E–43898–00	.SEAL ,DUST 2	1	1				
8	64E–43867–00	.O-RING	1	1				
9	64E–43866–00	.O-RING	1	1				
10	6E5–43862–00	.O-RING	1	1				
11	64E–43883–00	.O-RING	1	1				
12	6E5–43872–00	RING, BACK UP	1	1				
13	6E5–43814–02	PISTON, FREE	1	1				
14	6E5–43862–00	O-RING	1	1				
15	64E–43820–00	TRIM PISTON SUB ASSY	2	2				
16	64E–43821–00	.SCREW, TRIM CYLINDER END	1	1				
17	64E–43822–00	.SEAL, TRIM DUST	1	1				
18	64E–4384J–00	.SEAL, TRIM DOWN	1	1				
19	6G5–43864–00	.O-RING	1	1				
20	6E5–43864–00	O-RING	2	2				
21	6E5–43874–01	RING, BACK UP	2	2				
22	64E–43828–00	BODY, RESERVOIR	1	1				
23	64E–43829–00	PLUG, RESERVOIR	1	1				
24	64E–43897–00	O-RING	1	1				
25	64E–4388E–00	BOLT ,SCREW (L:14MM)	3	3				
26	64E–43869–00	O-RING	6	6				
27	64E–4381G–00	PIN	1	1				

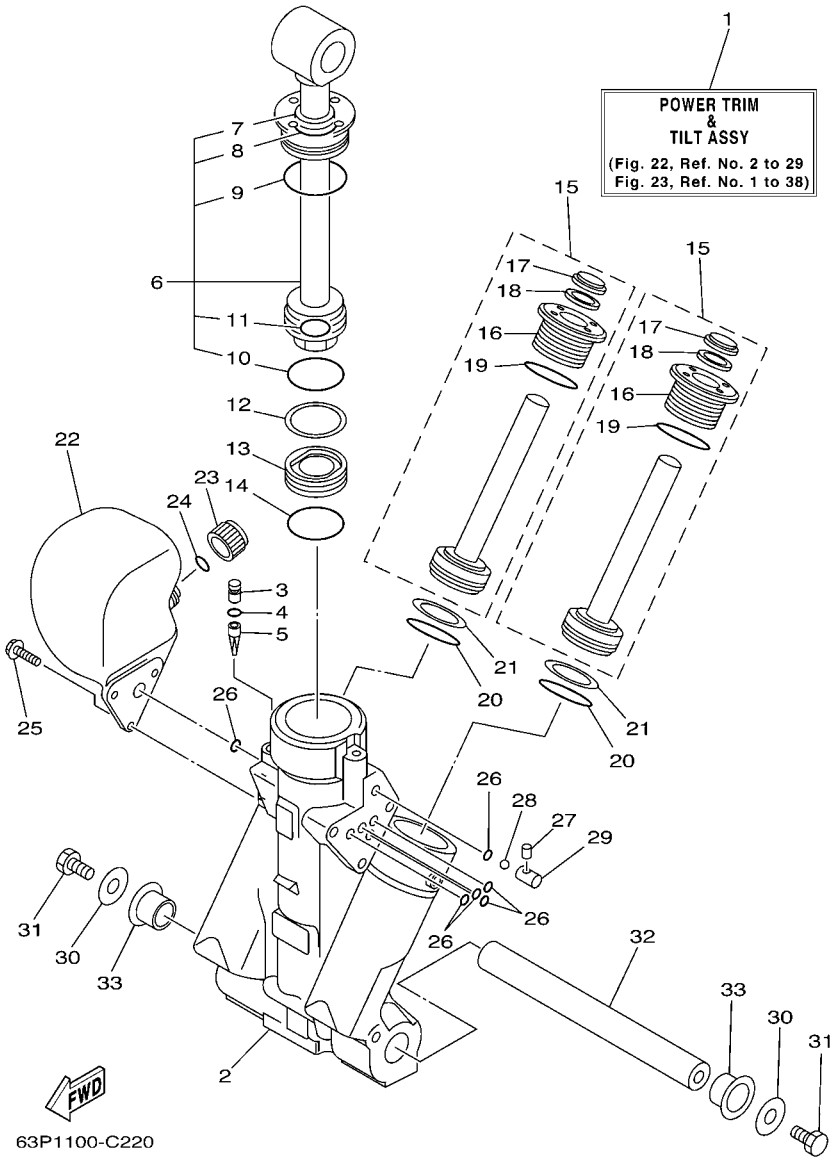

FIG. 22 POWER TRIM & TILT ASSY 1

REF. NO.	PART NO.	DESCRIPTION	63P1	64P1				REMARKS
28	6E5–43858–00	BALL	1	1				
29	64E–4382G–00	VALVE, SEAT	1	1				
30	90201–08M14	WASHER, PLATE	2	2				
31	97080–08016	BOLT	2	2				
32	64E–43818–01	PIN, LOWER SHOCK MOUNT	1	1				
33	90386–22M98	BUSH	2	2				

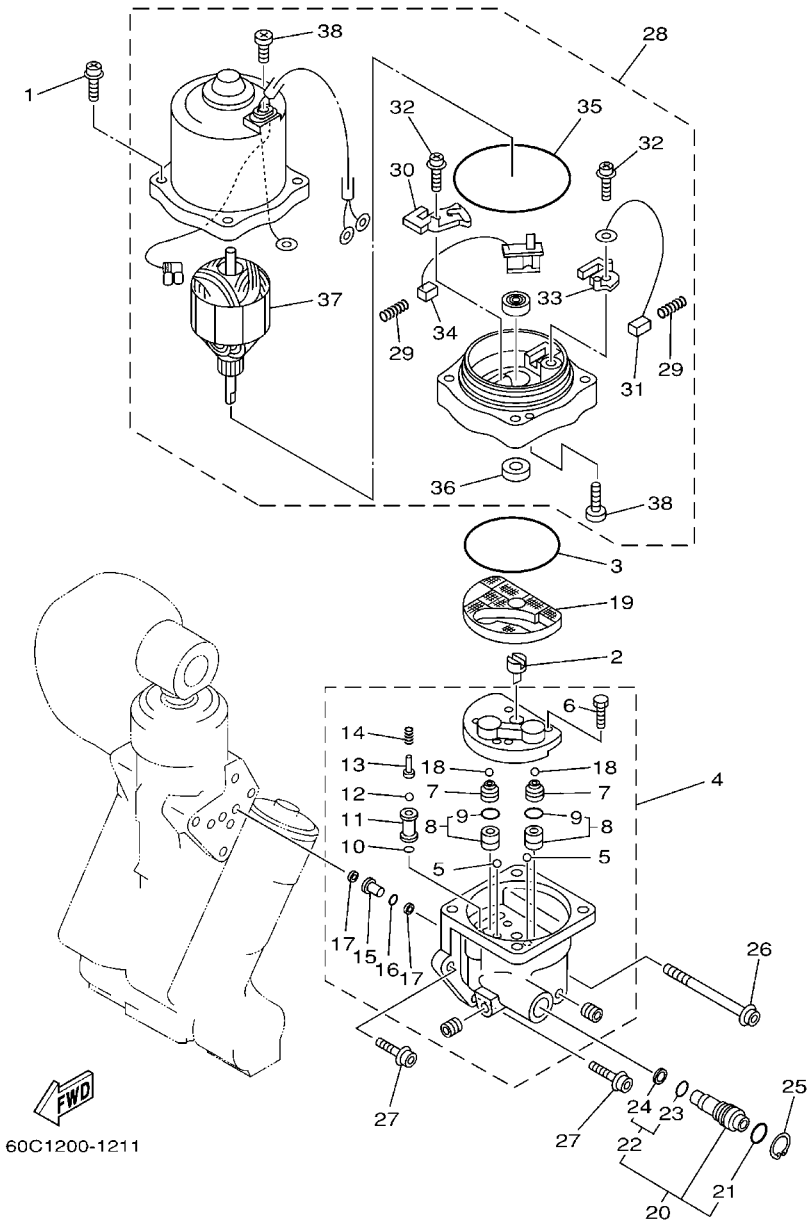

FIG. 23 POWER TRIM & TILT ASSY 2

REF. NO.	PART NO.	DESCRIPTION	63P1	64P1				REMARKS
1	64E–4388E–10	BOLT ,SCREW (L:34.7MM)	4	4				
2	64E–43831–00	CONNECTOR, SHAFT	1	1				
3	64E–43868–00	O-RING	1	1				
4	64E–43830–00	GEAR PUMP ASSY	1	1				
5	72X–43858–00	.BALL	2	2				
6	64E–43843–00	.SCREW, VALVE LOCK	4	4				
7	64E–43841–00	.PISTON, SHUTTLE	2	2				
8	64E–43802–00	.VALVE SUB ASSY	2	2				
9	6E5–43896–00	..O-RING	1	1				
10	6G5–43863–00	.O-RING	1	1				
11	64E–43851–00	.SEAT, RELIEF VALVE	1	1				
12	64E–43858–00	.BALL	1	1				
13	64E–43859–00	.PIN, VALVE SUPPORT	1	1				
14	64E–43855–00	.SPRING, UP RELIEF	1	1				
15	64E–43850–00	.VALVE SUB ASSY	1	1				
16	64E–43865–00	.O-RING	1	1				
17	64E–43816–00	.FILTER 1	2	2				
18	64E–43858–00	.BALL	2	2				
19	64E–43817–10	FILTER 2	1	1				
20	64E–43860–00	MANUAL VALVE SUB-ASSY	1	1				
21	72X–85075–L0	.O-RING	1	1				
22	64E–43827–00	.RING SET	1	1				
23	64E–4387A–00	..O-RING	1	1				
24	64E–43873–00	..RING, BACK UP	1	1				
25	64E–43875–00	RING, SNAP	1	1				
26	64E–43879–10	SCREW, WITH WASHER	1	1				
27	64E–43879–00	SCREW, WITH WASHER	2	2				

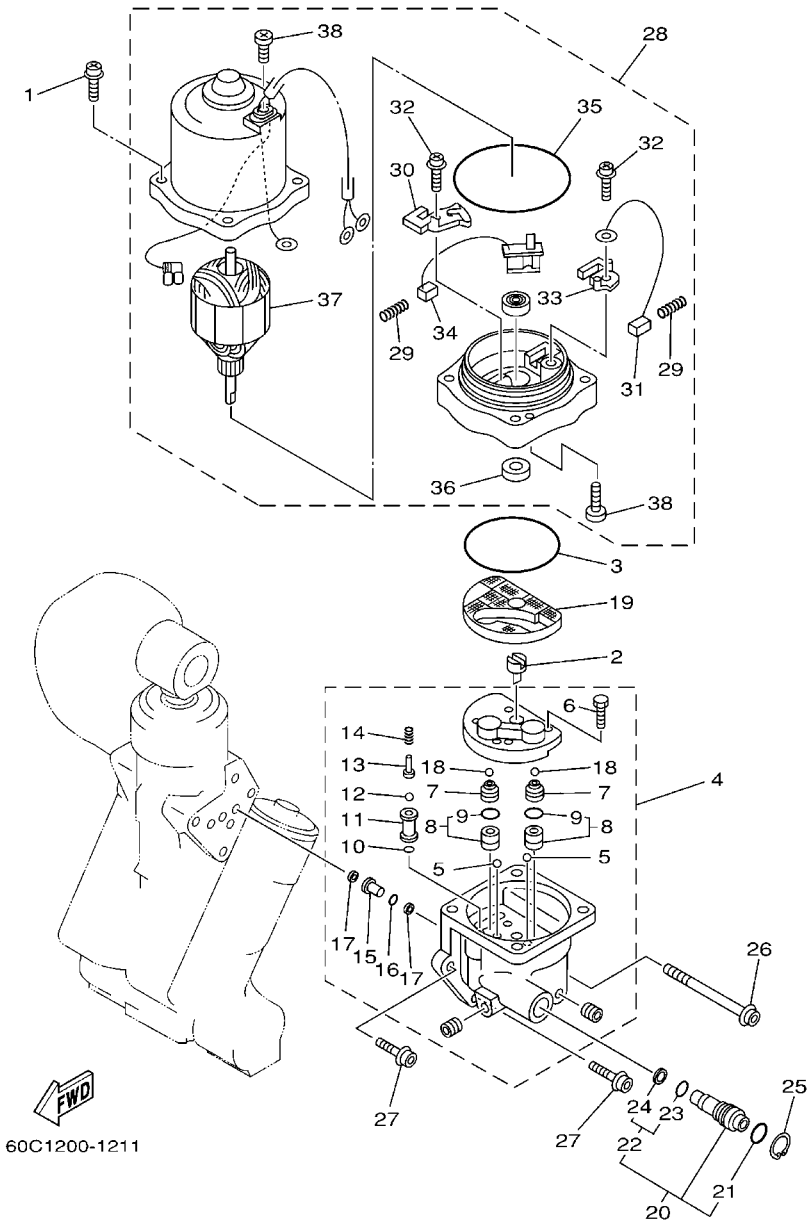

FIG. 23 POWER TRIM & TILT ASSY 2

REF. NO.	PART NO.	DESCRIPTION	63P1	64P1				REMARKS
28	67H–43880–01	MOTOR ASSY	1	1				
29	6H1–4386K–10	.SPRING, BRUSH	2	2				
30	64E–4380J–00	.HOLDER, BRUSH	1	1				
31	64E–43891–00	.BRUSH 1	1	1				
32	97607–04310	.SCREW,WITH WASHER	2	2				
33	64E–4380F–00	.HOLDER, BRUSH 2	1	1				
34	64E–43892–00	.BRUSH 2	1	1				
35	6G5–43865–00	.O-RING	1	1				
36	93102–08M43	.OIL SEAL	1	1				
37	64E–43805–00	.ARMATURE ASSY	1	1				
38	64E–43843–10	.SCREW, VALVE LOCK	3	3				

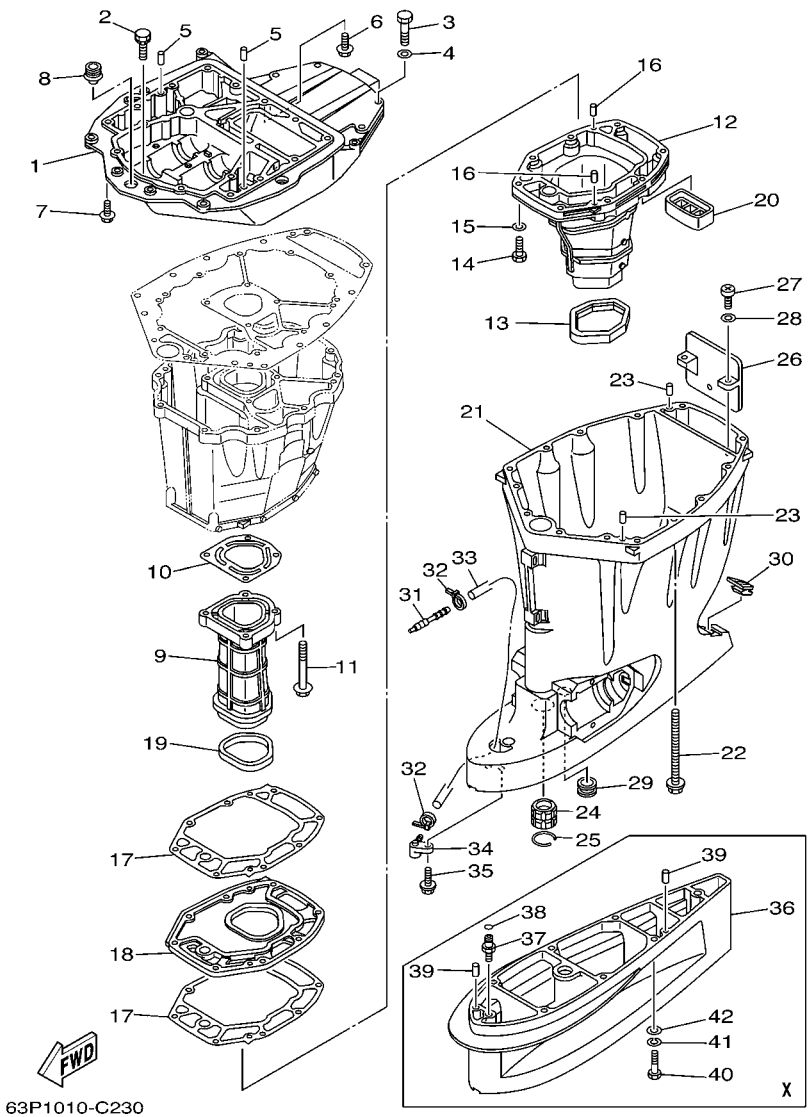

FIG. 24 UPPER CASING

REF. NO.	PART NO.	DESCRIPTION	63P1	64P1				REMARKS
1	63P–41137–00	GUIDE, EXHAUST	1	1				
2	90119–08M79	BOLT, WITH WASHER	2	2				
3	97075–10045	BOLT	4	4				
4	92995–10600	WASHER	4	4				
5	93608–16M16	PIN, DOWEL	2	2				
6	90119–08M58	BOLT, WITH WASHER	3	3				
7	97575–10535	BOLT, WITH WASHER	4	4				
8	6E5–42724–00	GROMMET	1	1				
9	63P–41131–00–5B	MANIFOLD, EXT. 1	1	1				
10	63P–41133–A0	GASKET, EXHAUST MANIFOLD 1	1	1				
11	97575–08560	BOLT, WITH WASHER	4	4				
12	63P–14711–00–5B	MUFFLER 1	1	1				
13	69J–45123–00	GASKET, MUFFLER	1	1				
14	97075–08035	BOLT	8	8				
15	92995–08600	WASHER	8	8				
16	93606–19M23	PIN, DOWEL	2	2				
17	63P–41134–A0	GASKET, EXHAUST MANIFOLD	2	2				
18	63P–45181–00–5B	PLATE	1	1				
19	63P–41138–00	SEAL, EXT. 1	1	1				
20	69J–45127–00	SEAL	1	1				
21	63P–45111–00–8D	CASING, UPPER	1	1				
22	90119–10007	BOLT, WITH WASHER	8	8				
23	93608–16M16	PIN, DOWEL	2	2				
24	6E5–45318–00	BUSHING, DRIVE SHAFT	1	1				
25	93420–36M01	CIRCLIP	1	1				
26	69J–14624–01	COVER, EXHAUST	1	1				
27	97880–06016	SCREW, PAN HEAD	2	2				

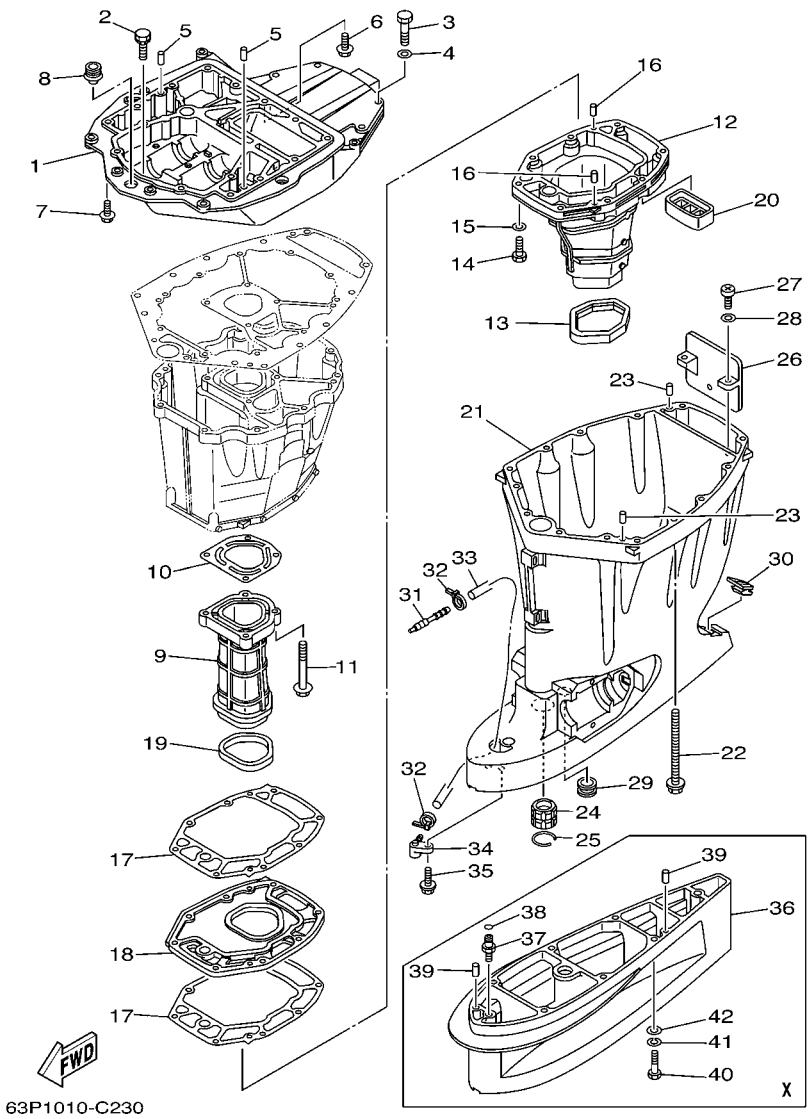

FIG. 24 UPPER CASING

REF. NO.	PART NO.	DESCRIPTION	63P1	64P1				REMARKS
28	92990–06600	WASHER, PLATE	2	2				
29	6E5–44366–00	DAMPER, WATER SEAL	1	1				
30	6H3–45155–00	CAP	1	1				
31	6E5–83558–00	END, NIPPLE	1	1				
32	90465–11M10	CLAMP	2	2				
33	90445–070F1	HOSE (L950)	1	1				
34	63P–45379–00	NIPPLE, HOSE	1	1				
35	90119–06M18	BOLT, WITH WASHER	1	1				
36	63P–45211–00–8D	EXTENSION	1	1				X
37	63P–45378–00	NIPPLE, HOSE	1	1				X
38	93210–07003	O-RING	1	1				X
39	93608–16M16	PIN, DOWEL	2	2				X
40	97095–10045	BOLT	6	6				X
41	92995–10100	WASHER	6	6				X
42	92995–10600	WASHER	6	6				X

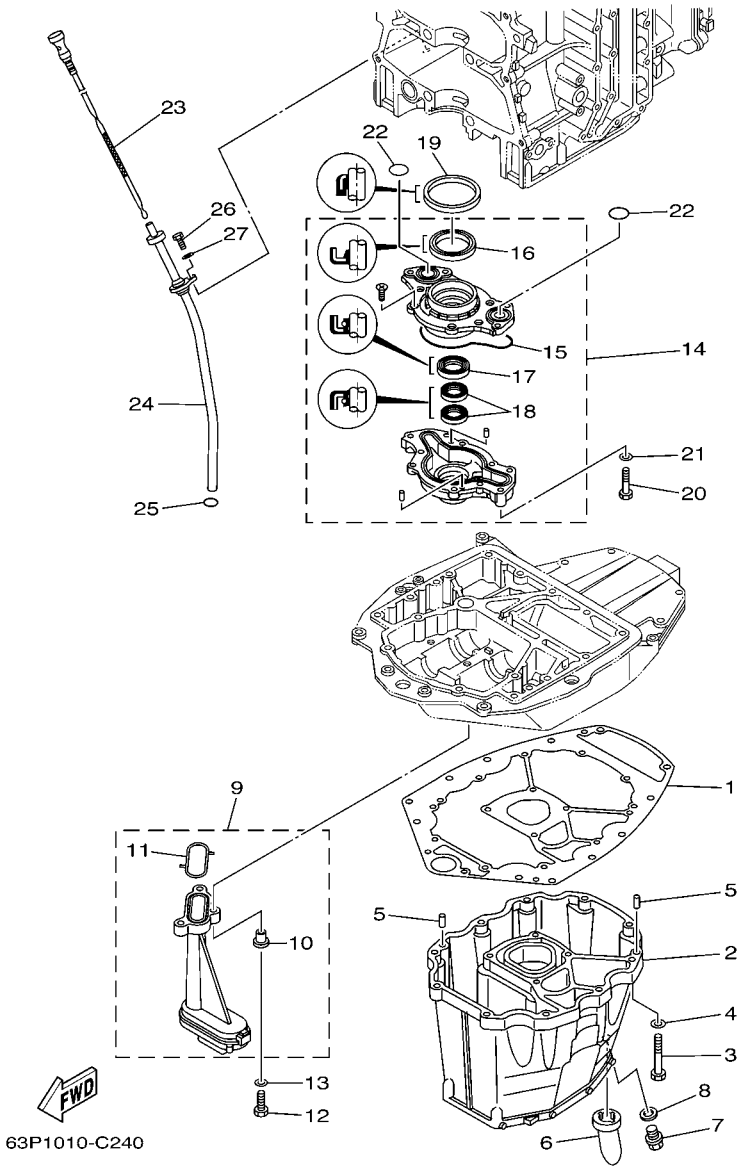

FIG. 25 OIL PAN

REF. NO.	PART NO.	DESCRIPTION	63P1	64P1				REMARKS
1	63P–15312–00	GASKET, OIL PAN	1	1				
2	63P–15311–00–5B	OIL PAN	1	1				
3	97075–08035	BOLT	10	10				
4	92995–08600	WASHER	10	10				
5	93608–16M16	PIN, DOWEL	2	2				
6	63P–15316–00	DAMPER, ENGINE MOUNT 1	1	1				
7	90340–14M06	PLUG, STRAIGHT SCREW	1	1				
8	90430–14M09	GASKET	1	1				
9	63P–13411–00	STRAINER, OIL	1	1				
10	90387–06M64	.COLLAR	3	3				
11	63P–13415–00	.SEAL, OIL STRAINER	1	1				
12	97027–06025	BOLT	3	3				
13	92907–06600	WASHER, PLATE	3	3				
14	63P–13300–00	OIL PUMP ASSY	1	1				
15	63P–13329–00	.GASKET, PUMP COVER	1	1				
16	69J–13338–00	.OIL SEAL	1	1				
17	69J–13119–00	.OIL SEAL	1	1				
18	69J–13631–00	.OIL SEAL	2	2				
19	69J–11355–00	SEAL, CYLINDER 1	1	1				
20	97095–06040	BOLT	4	4				
21	92995–06600	WASHER	4	4				
22	93210–25552	O-RING	2	2				
23	63P–15362–00	PLUG, OIL LEVEL	1	1				
24	63P–15377–00	GUIDE, INLET	1	1				
25	93210–19MJ3	O-RING	1	1				
26	97095–06020	BOLT	1	1				
27	92995–06600	WASHER	1	1				

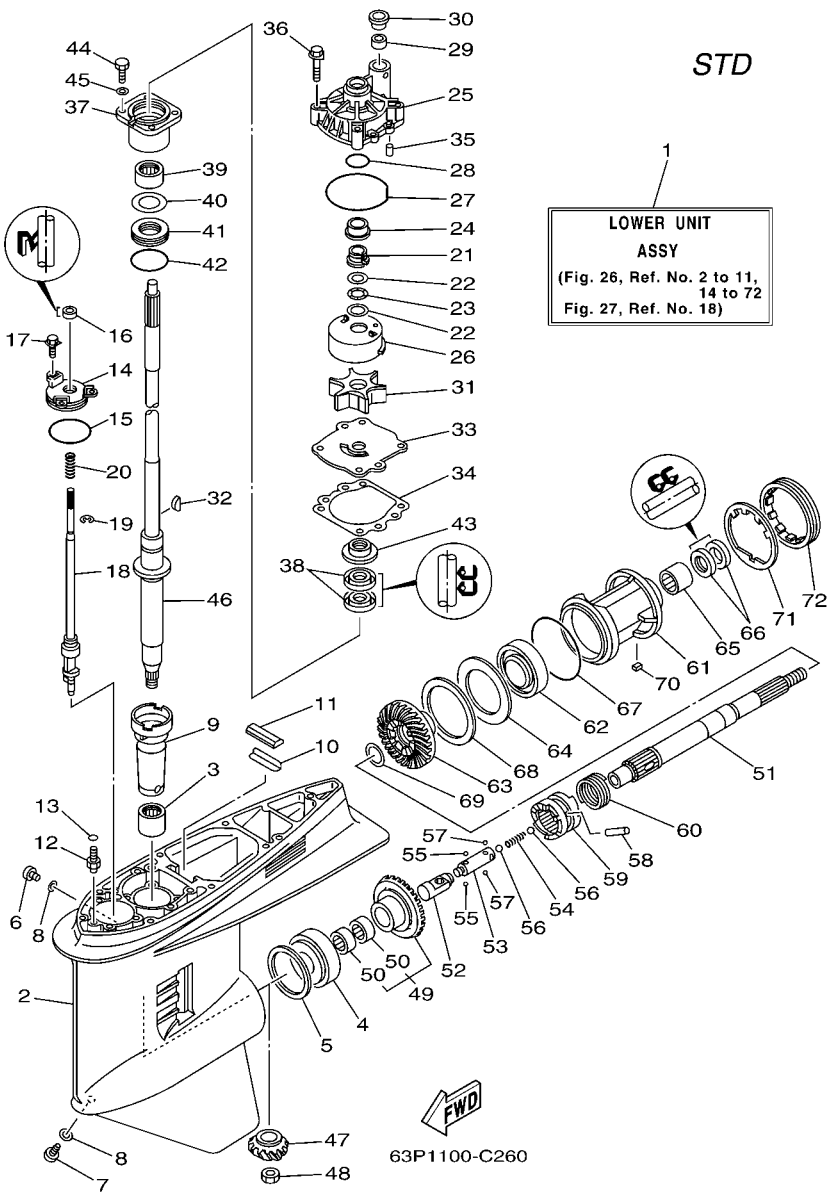

FIG. 26 LOWER CASING & DRIVE 1

REF. NO.	PART NO.	DESCRIPTION	63P1	64P1				REMARKS
1	63P–45300–00–8D	LOWER UNIT ASSY	1					L
	63P–45300–10–8D	LOWER UNIT ASSY	1					X
2	6J9–45301–05–8D	CASING, LOWER	1					
3	93311–928U5	BEARING	1					
4	93332–000V3	BEARING	1					
5	6G5–45567–01–10	SHIM (T:0.10MM)	1					UR
	6G5–45567–01–12	SHIM (T:0.12MM)	1					UR
	6G5–45567–01–15	SHIM (T:0.15MM)	1					UR
	6G5–45567–01–18	SHIM (T:0.18MM)	1					UR
	6G5–45567–01–30	SHIM (T:0.30MM)	1					UR
	6G5–45567–01–40	SHIM (T:0.40MM)	1					UR
	6G5–45567–01–50	SHIM (T:0.50MM)	1					UR
6	90340–08002	PLUG, STRAIGHT SCREW	1					
7	688–45341–10	PLUG, DRAIN	1					
8	90430–08020	GASKET	2					
9	6G5–45536–01	SLEEVE, DRIVE SHAFT	1					
10	663–45376–00–94	GUIDE, SEAL DAMPER	1					
11	688–45375–00	DAMPER, SEAL	1					
12	63P–45378–00	NIPPLE, HOSE	1					
13	93210–07003	O-RING	1					
14	6E5–45321–00	PLATE	1					
15	93210–58144	O-RING	1					
16	93106–09014	OIL SEAL	1					
17	90119–06M10	BOLT, WITH WASHER	3					
18	63P–44150–00	SHIFT CAM ASSY	1					L
	63P–44150–10	SHIFT CAM ASSY	1					X
19	99001–08600	CIRCLIP	1					

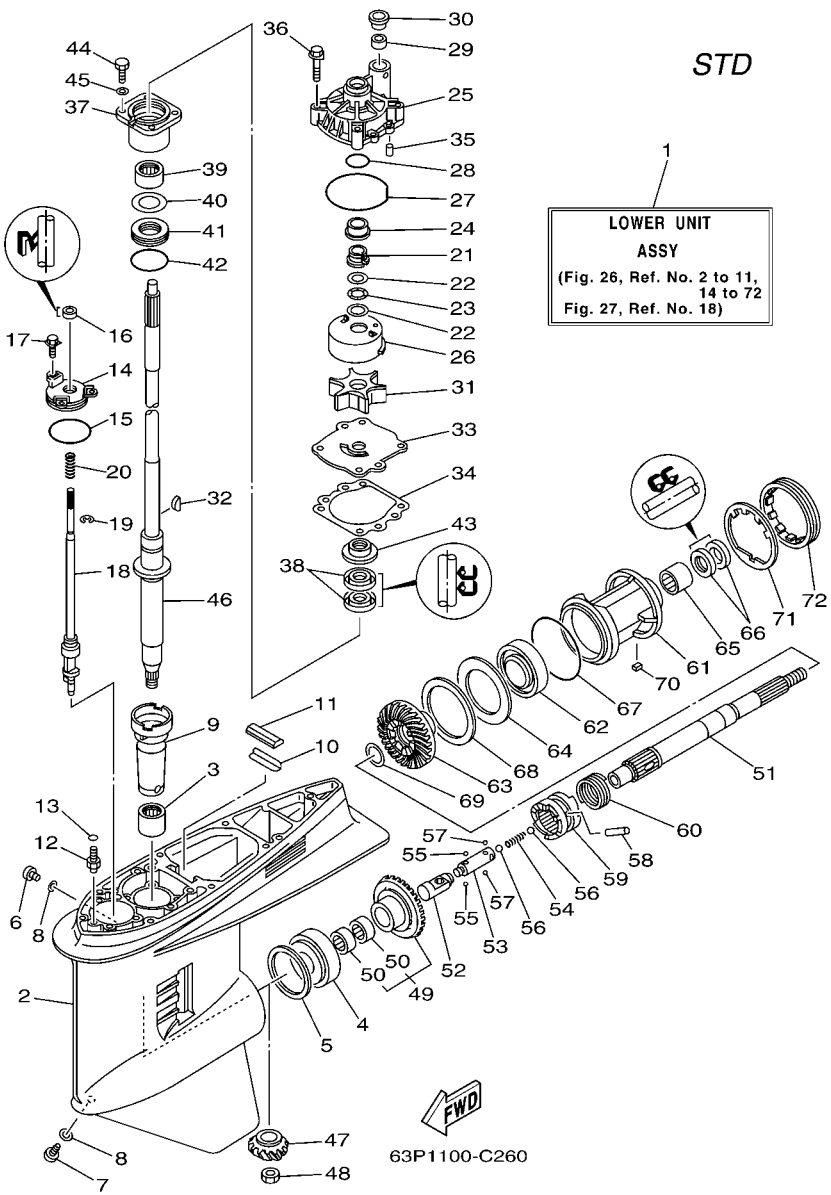

FIG. 26 LOWER CASING & DRIVE 1

REF. NO.	PART NO.	DESCRIPTION	63P1	64P1				REMARKS
20	90501–11M10	SPRING, COMPRESSION	1					
21	61A–45538–00	SPACER 1	1					
22	90201–22M01	WASHER, PLATE	2					
23	90206–22M19	WASHER, WAVE	1					
24	61A–45527–00	COLLAR, DRIVE SHAFT	1					
25	61A–44311–01	HOUSING, WATER PUMP	1					
26	61A–44322–02	INSERT, CARTRIDGE	1					
27	93210–86M38	O-RING	1					
28	93210–37160	O-RING	1					
29	6E5–44365–00	DAMPER, WATER SEAL	1					
30	6E5–44312–00	COVER, WATER PUMP HOUSING	1					
31	6E5–44352–01	IMPELLER	1					
32	90280–04M05	KEY, WOODRUFF	1					
33	6G5–44323–00	OUTER PLATE, CARTRIDGE	1					
34	6E5–44315–A0	GASKET, WATER PUMP	1					
35	93606–12019	PIN, DOWEL	2					
36	90119–08M14	BOLT, WITH WASHER	4					
37	6E5–45331–00–94	HOUSING, BEARING	1					
38	93101–28M16	OIL SEAL	2					
39	93317–330U2	BEARING	1					
40	6E5–45587–01–10	SHIM (T:0.10MM)	1					UR
	6E5–45587–01–12	SHIM (T:0.12MM)	1					UR
	6E5–45587–01–15	SHIM (T:0.15MM)	1					UR
	6E5–45587–01–18	SHIM (T:0.18MM)	1					UR
	6E5–45587–01–30	SHIM (T:0.30MM)	1					UR
	6E5–45587–01–40	SHIM (T:0.40MM)	1					UR
	6E5–45587–01–50	SHIM (T:0.50MM)	1					UR

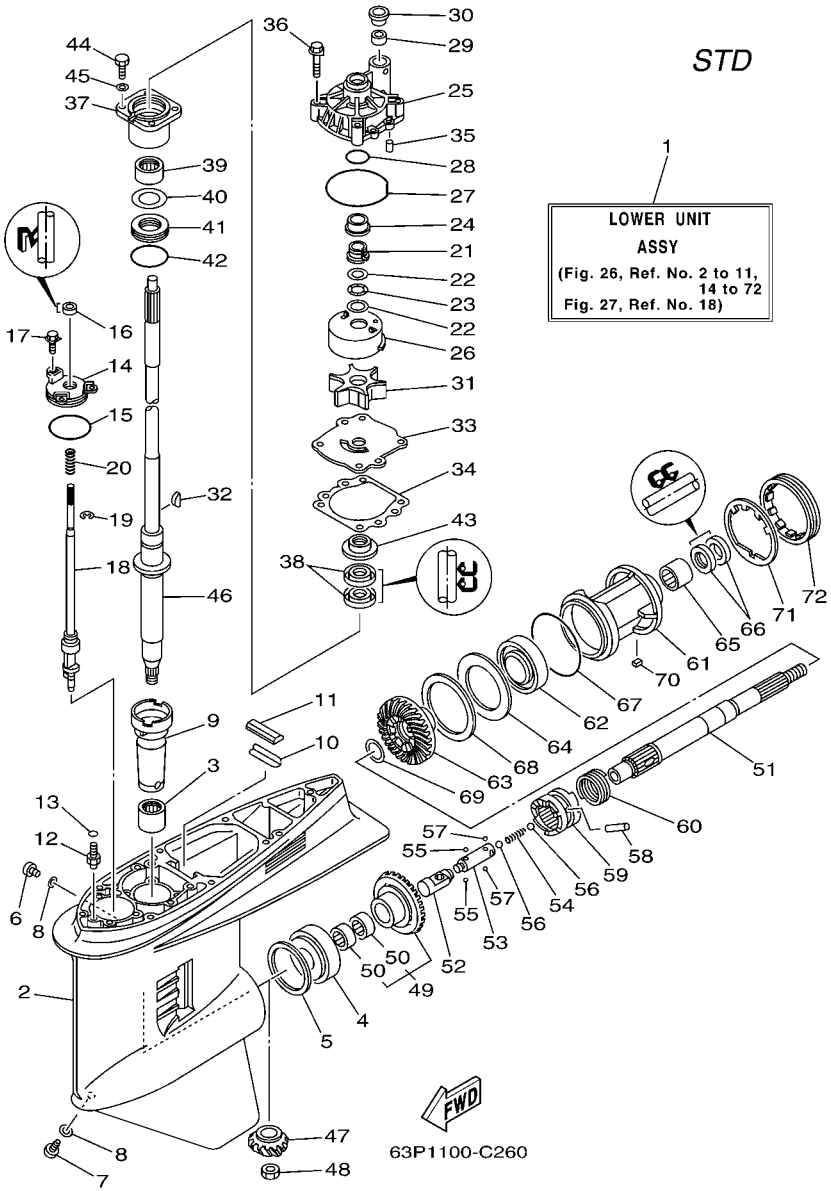

FIG. 26 LOWER CASING & DRIVE 1

REF. NO.	PART NO.	DESCRIPTION	63P1	64P1				REMARKS
41	93341–930V2	BEARING	1					
42	93210–55M14	O-RING	1					
43	6E5–45344–00	COVER, OIL SEAL	1					
44	97095–08025	BOLT	4					
45	92995–08600	WASHER	4					
46	63P–45501–00	DRIVE SHAFT COMP.	1					L
	63P–45501–10	DRIVE SHAFT COMP.	1					X
47	63P–45551–00	PINION	1					
48	90170–16M01	NUT	1					
49	63P–45560–00	GEAR	1					
50	93315–425V3	.BEARING	2					
51	6J9–45611–01	SHAFT, PROPELLER	1					
52	6E5–45641–03	SHIFTER	1					
53	6E5–45634–01	SLIDE, SHIFT	1					
54	90501–16M37	SPRING, COMPRESSION	1					
55	93507–32009	BALL	2					
56	93511–32017	BALL	2					
57	93503–16003	BALL	2					
58	90250–08M07	PIN, STRAIGHT	1					
59	63P–45631–00	CLUTCH, DOG	1					
60	6E5–45633–01	RING, CROSS PIN	1					
61	6J9–45332–00–8D	HOUSING, BEARING	1					
62	93306–209U0	BEARING	1					
63	63P–45571–00	GEAR	1					
64	6G5–45576–10	WASHER, THRUST	1					
65	93315–43061	BEARING	1					
66	93101–30M17	OIL SEAL	2					

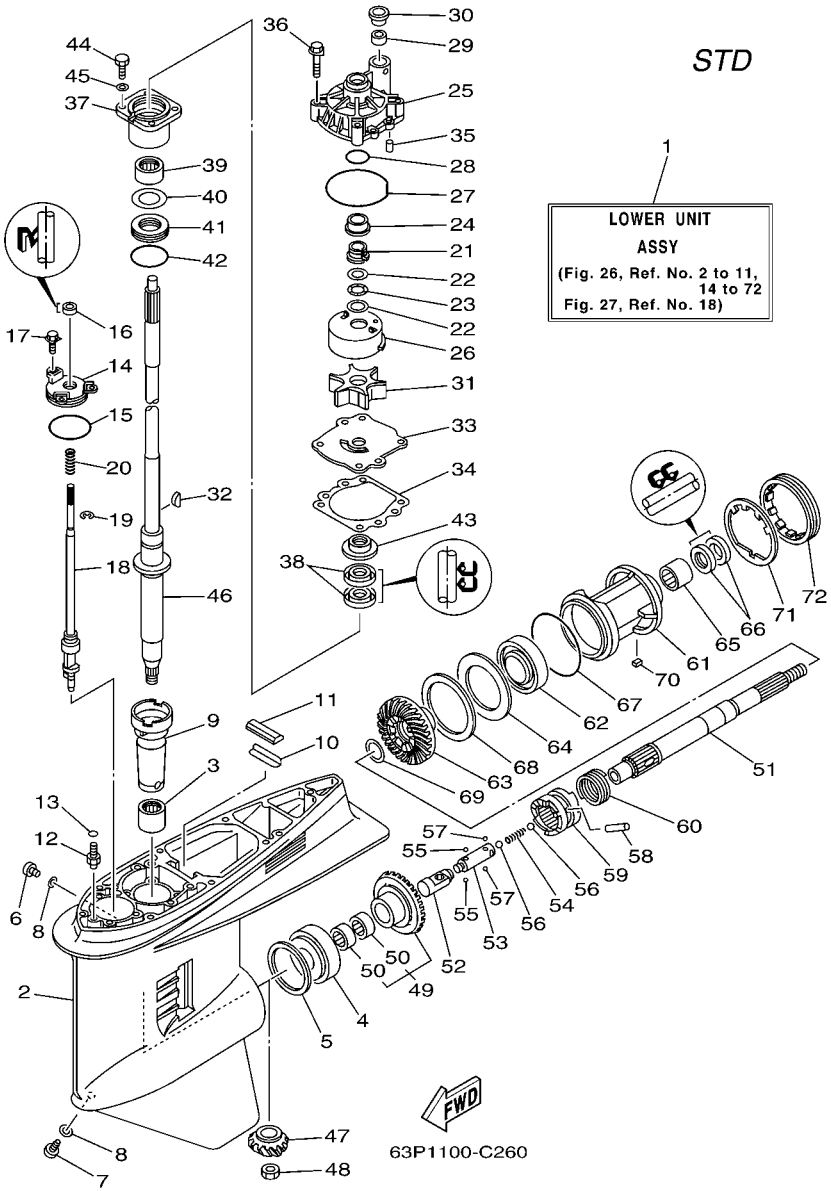

FIG. 26 LOWER CASING & DRIVE 1

REF. NO.	PART NO.	DESCRIPTION	63P1	64P1				REMARKS
67	93210–97M55	O-RING	1					
68	6G5–45577–02–10	SHIM (T:0.10MM)	1					UR
	6G5–45577–02–12	SHIM (T:0.12MM)	1					UR
	6G5–45577–02–15	SHIM (T:0.15MM)	1					UR
	6G5–45577–02–18	SHIM (T:0.18MM)	1					UR
	6G5–45577–02–30	SHIM (T:0.30MM)	1					UR
	6G5–45577–02–40	SHIM (T:0.40MM)	1					UR
	6G5–45577–02–50	SHIM (T:0.50MM)	1					UR
69	90201–30M92	WASHER, PLATE	1					
70	90282–04M00	KEY, STRAIGHT	1					
71	6G5–45383–01	WASHER, CLAW	1					
72	6G5–45384–02	NUT	1					

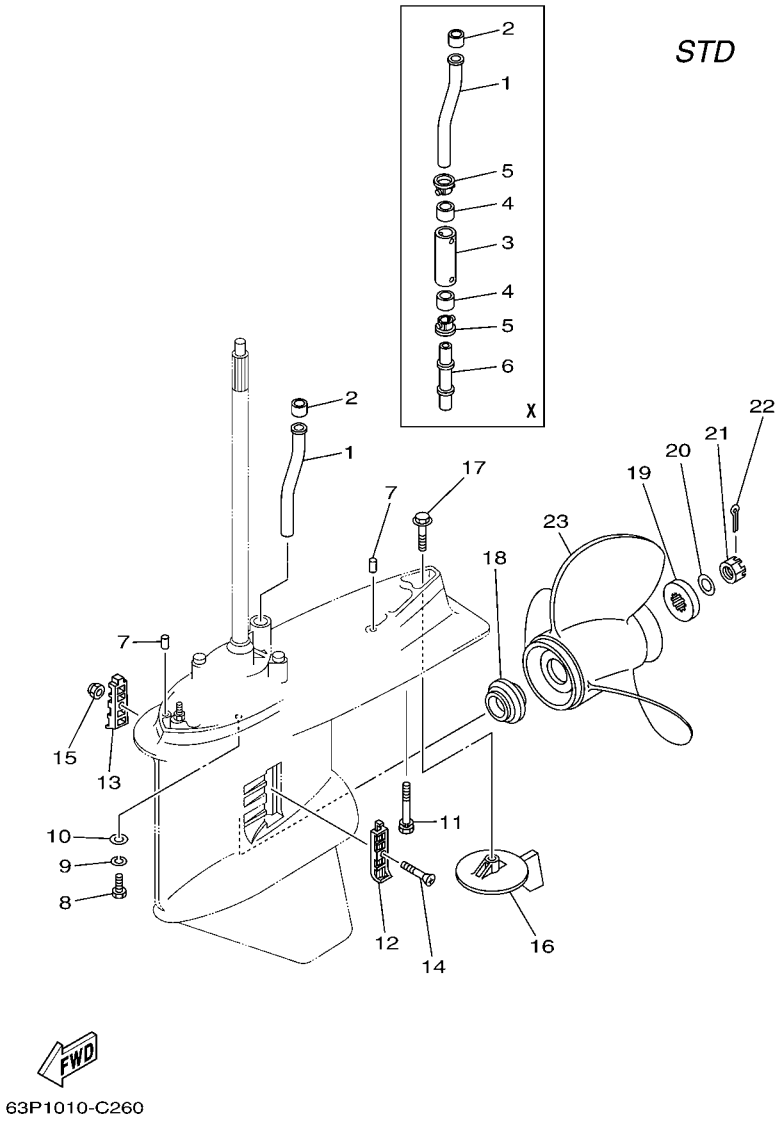

FIG. 27 LOWER CASING & DRIVE 2

REF. NO.	PART NO.	DESCRIPTION	63P1	64P1				REMARKS
1	63P–44361–00	TUBE, WATER	1					
2	6E5–44365–00	DAMPER, WATER SEAL	1					
3	63P–44362–00	TUBE, WATER	1					X
4	6E5–44365–00	DAMPER, WATER SEAL	2					X
5	6E5–44312–00	COVER, WATER PUMP HOUSING	2					X
6	63P–44363–00	TUBE, WATER 3	1					X
7	93608–16M16	PIN, DOWEL	2					
8	97095–10045	BOLT	6					
9	92995–10100	WASHER	6					
10	92995–10600	WASHER	6					
11	90119–10MA2	BOLT, WITH WASHER	1					L
	90119–10008	BOLT, WITH WASHER	1					X
12	6J9–45214–00	COVER, WATER INLET	1					
13	6J9–45215–00	COVER, WATER INLET	1					
14	90152–05M08	SCREW, COUNTERSUNK	1					
15	90185–05002	NUT, SELF-LOCKING	1					
16	6J9–45371–01	TAB-TRIM	1					
17	90105–10M00	BOLT, FLANGE	1					
18	63P–45987–00	SPACER	1					
19	688–45997–01	SPACER	1					
20	92990–18200	WASHER	1					
21	90171–18M04	NUT, CASTLE	1					
22	91490–40030	PIN, COTTER	1					
23	6G5–45941–00–98	PROPELLER (3X15-1/4X15-M)	1					UR
	6G5–45943–01–98	PROPELLER (3X13-3/4X21-M)	1					UR
	6G5–45945–01–98	PROPELLER (3X14X19-M)	1					UR
	6G5–45947–01–98	PROPELLER (3X14-1/2X17-M)	1					UR

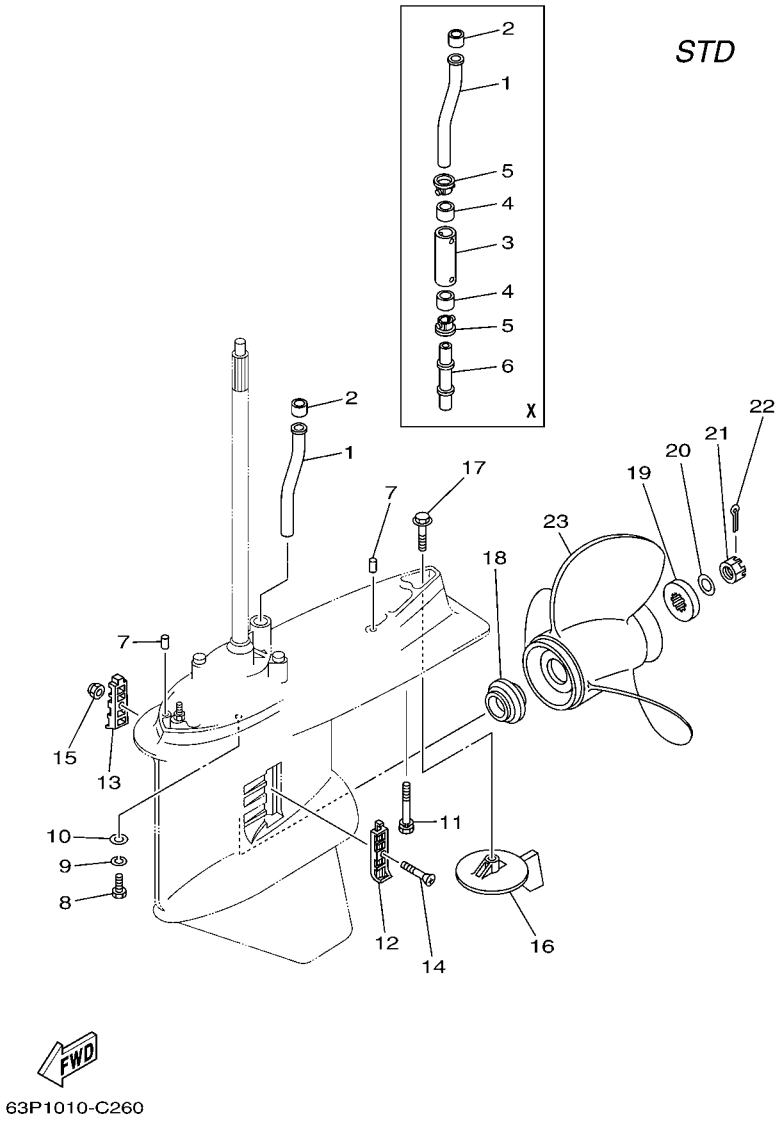

FIG. 27 LOWER CASING & DRIVE 2

REF. NO.	PART NO.	DESCRIPTION	63P1	64P1				REMARKS
23	6G5–45949–00–98	PROPELLER (3X13-1/2X23-M)	1					UR
	6G5–45930–00–98	PROPELLER (3X13-3/8X25-M)	1					UR
	6G5–45932–00–98	PROPELLER (3X15-3/4X13-M)	1					UR
	6G5–45970–02–98	PROPELLER (3X15-1/4X15-M)	1					UR
	6G5–45972–02–98	PROPELLER (3X13-3/4X21-M)	1					UR
	6G5–45974–03–98	PROPELLER (3X13-3/4X19-M2)	1					UR
	6G5–45976–01–98	PROPELLER (3X13-3/8X23-M)	1					UR
	6G5–45978–03–98	PROPELLER (3X13-3/4X17-M2)	1					UR
	6R4–45970–A0	PROPELLER (3X15-1/4X19-M)	1					UR
	6R4–45972–A0	PROPELLER (3X14-7/8X21-M)	1					UR
	6R4–45974–A0	PROPELLER (3X14-1/2X23-M)	1					UR
	6R4–45976–A0	PROPELLER (3X14-1/2X15-M)	1					UR
	6R4–45978–A0	PROPELLER (3X15-1/4X17-M)	1					UR
	6J9–45970–10	PROPELLER (3X14-1/2X25-M)	1					UR
	6J9–45972–10	PROPELLER (3X14-1/2X23-M)	1					UR
	6J9–45974–10	PROPELLER (3X14-1/2X27-M)	1					UR
	6J9–45976–10	PROPELLER (3X14-1/2X21-M)	1					UR

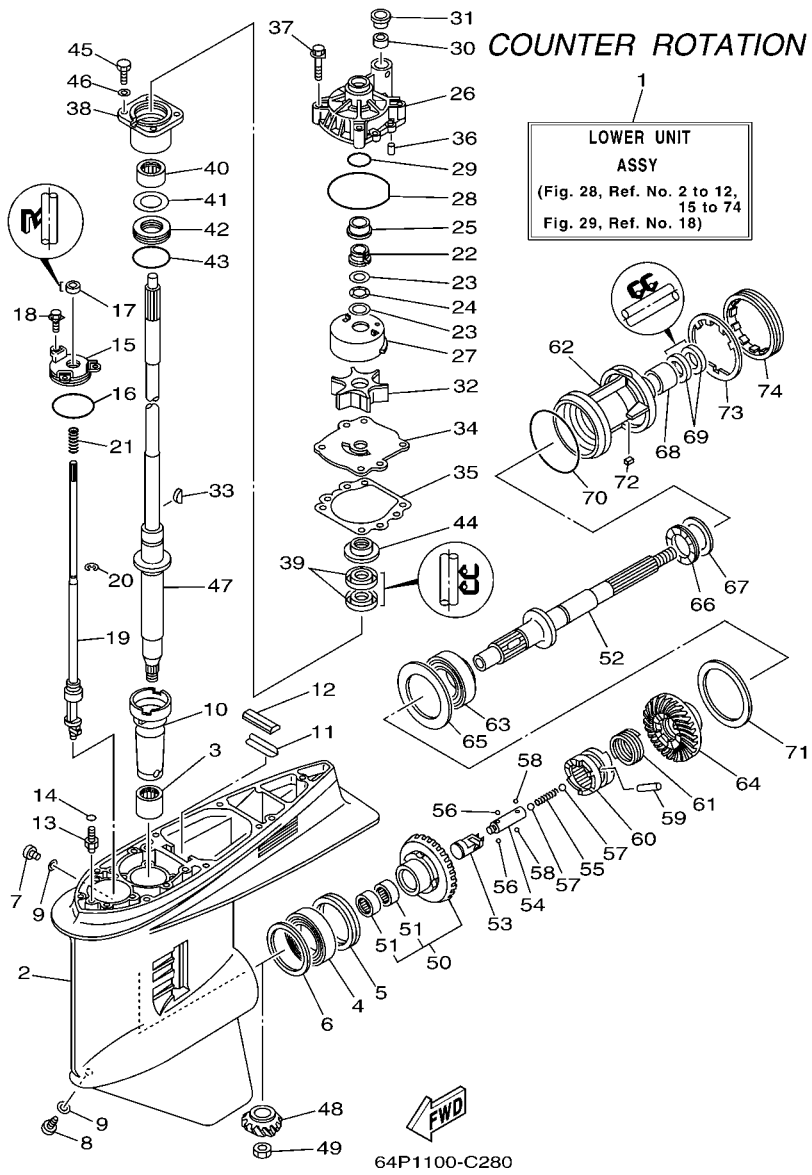

FIG. 28 LOWER CASING & DRIVE 3

REF. NO.	PART NO.	DESCRIPTION	63P1	64P1				REMARKS
1	64P–45300–10–8D	LOWER UNIT ASSY		1				X
2	6J9–45301–05–8D	CASING, LOWER		1				
3	93311–928U5	BEARING		1				
4	93390–000U2	BEARING		1				
5	93341–465U4	BEARING		1				
6	6G5–45567–01–10	SHIM (T:0.10MM)		1				UR
	6G5–45567–01–12	SHIM (T:0.12MM)		1				UR
	6G5–45567–01–15	SHIM (T:0.15MM)		1				UR
	6G5–45567–01–18	SHIM (T:0.18MM)		1				UR
	6G5–45567–01–30	SHIM (T:0.30MM)		1				UR
	6G5–45567–01–40	SHIM (T:0.40MM)		1				UR
	6G5–45567–01–50	SHIM (T:0.50MM)		1				UR
7	90340–08002	PLUG, STRAIGHT SCREW		1				
8	688–45341–10	PLUG, DRAIN		1				
9	90430–08020	GASKET		2				
10	6G5–45536–01	SLEEVE, DRIVE SHAFT		1				
11	663–45376–00–94	GUIDE, SEAL DAMPER		1				
12	688–45375–00	DAMPER, SEAL		1				
13	63P–45378–00	NIPPLE, HOSE		1				
14	93210–07003	O-RING		1				
15	6E5–45321–00	PLATE		1				
16	93210–58144	O-RING		1				
17	93106–09014	OIL SEAL		1				
18	90119–06M10	BOLT, WITH WASHER		3				
19	64P–44150–10	SHIFT CAM ASSY		1				X
20	99001–08600	CIRCLIP		1				
21	90501–11M10	SPRING, COMPRESSION		1				

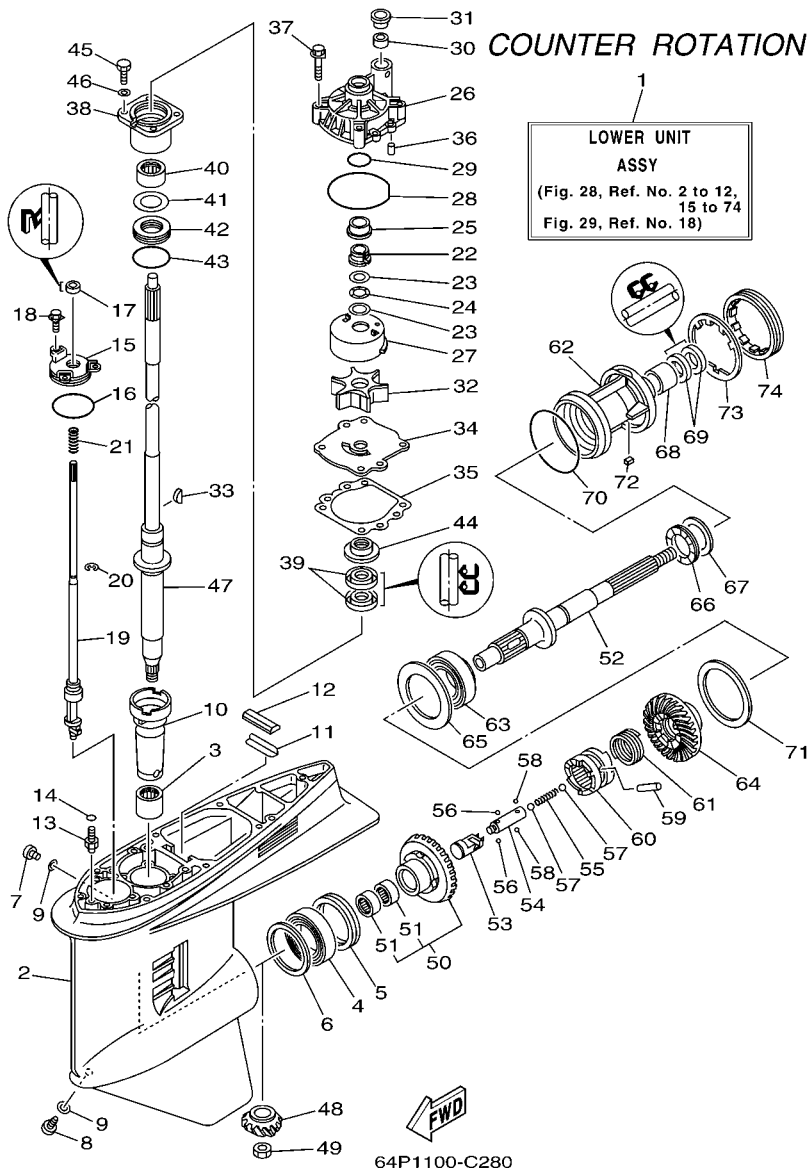

FIG. 28 LOWER CASING & DRIVE 3

REF. NO.	PART NO.	DESCRIPTION	63P1	64P1				REMARKS
22	61A–45538–00	SPACER 1		1				
23	90201–22M01	WASHER, PLATE		2				
24	90206–22M19	WASHER, WAVE		1				
25	61A–45527–00	COLLAR, DRIVE SHAFT		1				
26	61A–44311–01	HOUSING, WATER PUMP		1				
27	61A–44322–02	INSERT, CARTRIDGE		1				
28	93210–86M38	O-RING		1				
29	93210–37160	O-RING		1				
30	6E5–44365–00	DAMPER, WATER SEAL		2				
31	6E5–44312–00	COVER, WATER PUMP HOUSING		2				
32	6E5–44352–01	IMPELLER		1				
33	90280–04M05	KEY, WOODRUFF		1				
34	6G5–44323–00	OUTER PLATE, CARTRIDGE		1				
35	6E5–44315–A0	GASKET, WATER PUMP		1				
36	93606–12019	PIN, DOWEL		2				
37	90119–08M14	BOLT, WITH WASHER		4				
38	6E5–45331–00–94	HOUSING, BEARING		1				
39	93101–28M16	OIL SEAL		2				
40	93317–330U2	BEARING		1				
41	6E5–45587–01–10	SHIM (T:0.10MM)		1				UR
	6E5–45587–01–12	SHIM (T:0.12MM)		1				UR
	6E5–45587–01–15	SHIM (T:0.15MM)		1				UR
	6E5–45587–01–18	SHIM (T:0.18MM)		1				UR
	6E5–45587–01–30	SHIM (T:0.30MM)		1				UR
	6E5–45587–01–40	SHIM (T:0.40MM)		1				UR
	6E5–45587–01–50	SHIM (T:0.50MM)		1				UR
42	93341–930V2	BEARING		1				

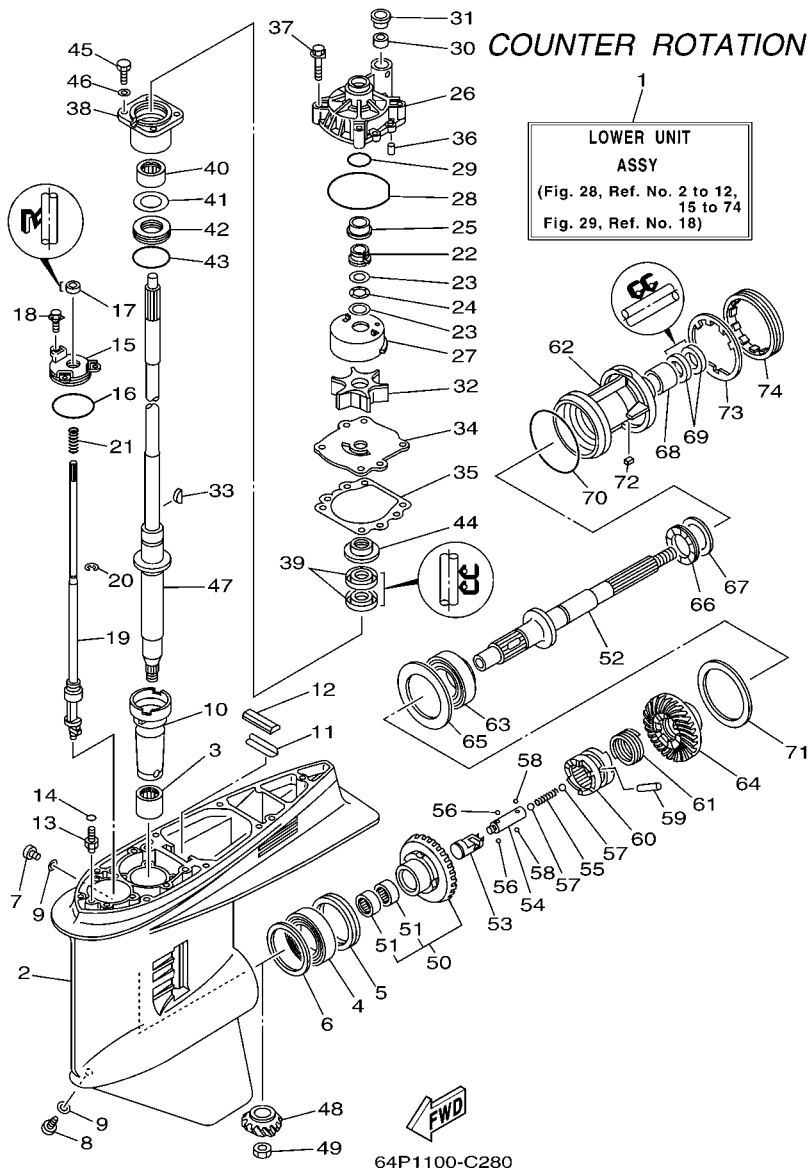

FIG. 28 LOWER CASING & DRIVE 3

REF. NO.	PART NO.	DESCRIPTION	63P1	64P1				REMARKS
43	93210–55M14	O-RING		1				
44	6E5–45344–00	COVER, OIL SEAL		1				
45	97095–08025	BOLT		4				
46	92995–08600	WASHER		4				
47	63P–45501–10	DRIVE SHAFT COMP.		1				X
48	63P–45551–00	PINION		1				
49	90170–16M01	NUT		1				
50	64P–45560–00	GEAR		1				
51	93315–425V3	.BEARING		2				
52	6K1–45611–10	SHAFT, PROPELLER		1				
53	6K1–45641–01	SHIFTER		1				
54	6E5–45634–01	SLIDE, SHIFT		1				
55	90501–16M37	SPRING, COMPRESSION		1				
56	93507–32009	BALL		2				
57	93511–32017	BALL		2				
58	93503–16003	BALL		2				
59	90250–08M07	PIN, STRAIGHT		1				
60	63P–45631–00	CLUTCH, DOG		1				
61	6E5–45633–01	RING, CROSS PIN		1				
62	6K1–45332–01–8D	HOUSING, BEARING		1				
63	93332–00048	BEARING		1				
64	64P–45570–00	GEAR		1				
65	6K1–45576–00	WASHER, THRUST		1				
66	93341–440U5	BEARING		1				
67	6K1–45578–01–10	SHIM (T:0.10MM)		1				UR
	6K1–45578–01–12	SHIM (T:0.12MM)		1				UR
	6K1–45578–01–15	SHIM (T:0.15MM)		1				UR

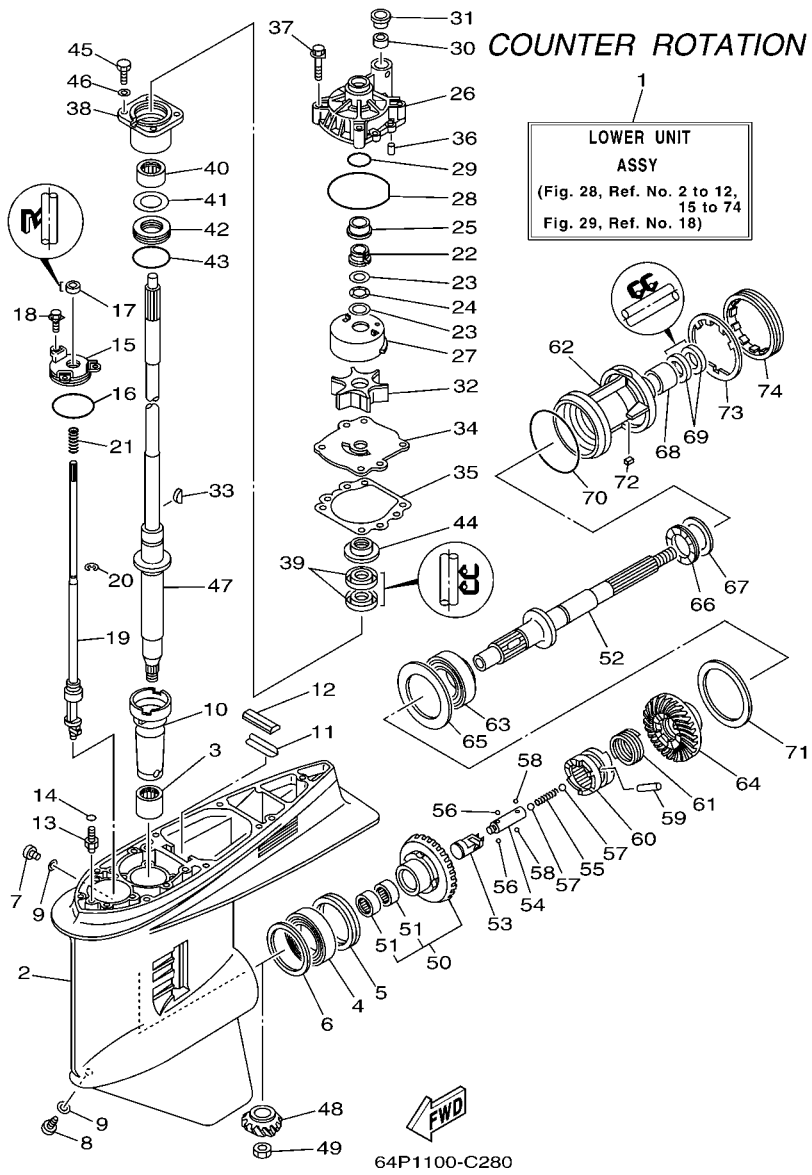

FIG. 28 LOWER CASING & DRIVE 3

REF. NO.	PART NO.	DESCRIPTION	63P1	64P1				REMARKS
67	6K1–45578–01–18	SHIM (T:0.18MM)		1				UR
	6K1–45578–01–30	SHIM (T:0.30MM)		1				UR
	6K1–45578–01–40	SHIM (T:0.40MM)		1				UR
	6K1–45578–01–50	SHIM (T:0.50MM)		1				UR
68	93315–43061	BEARING		1				
69	93101–30M17	OIL SEAL		2				
70	93210–97M55	O-RING		1				
71	6G5–45577–02–10	SHIM (T:0.10MM)		1				UR
	6G5–45577–02–12	SHIM (T:0.12MM)		1				UR
	6G5–45577–02–15	SHIM (T:0.15MM)		1				UR
	6G5–45577–02–18	SHIM (T:0.18MM)		1				UR
	6G5–45577–02–30	SHIM (T:0.30MM)		1				UR
	6G5–45577–02–40	SHIM (T:0.40MM)		1				UR
	6G5–45577–02–50	SHIM (T:0.50MM)		1				UR
72	90282–04M00	KEY, STRAIGHT		1				
73	6G5–45383–01	WASHER, CLAW		1				
74	6G5–45384–02	NUT		1				

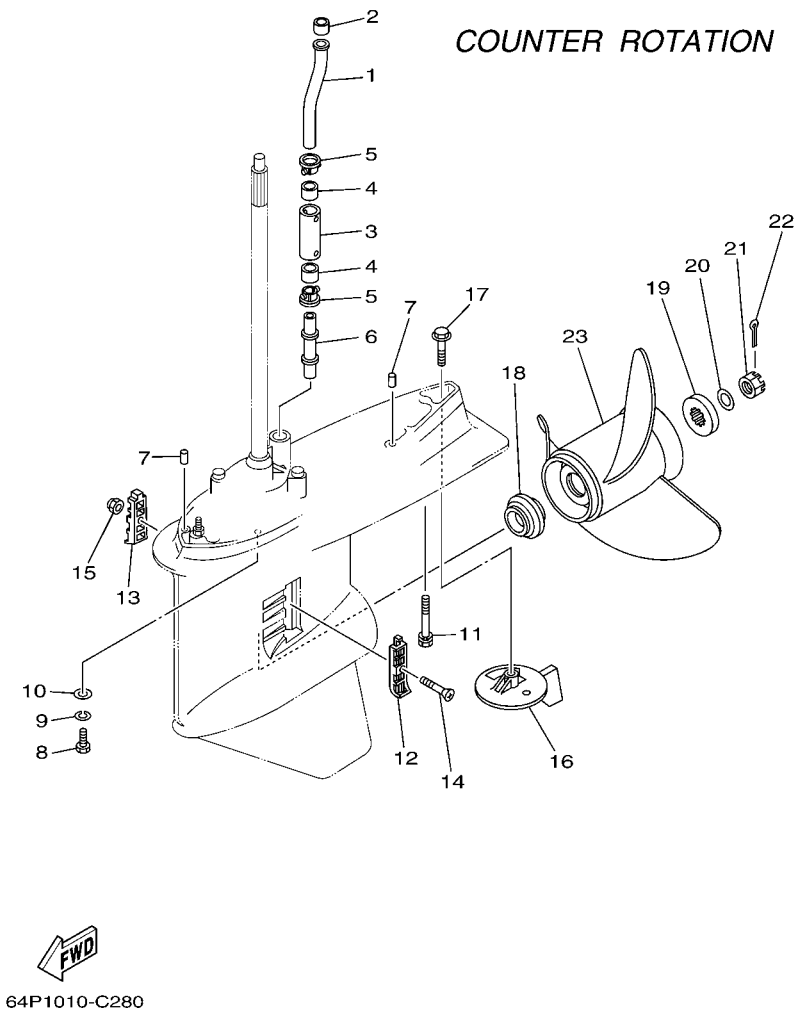

FIG. 29 LOWER CASING & DRIVE 4

REF. NO.	PART NO.	DESCRIPTION	63P1	64P1				REMARKS
1	63P–44361–00	TUBE, WATER		1				
2	6E5–44365–00	DAMPER, WATER SEAL		1				
3	63P–44362–00	TUBE, WATER		1				X
4	6E5–44365–00	DAMPER, WATER SEAL		2				X
5	6E5–44312–00	COVER, WATER PUMP HOUSING		2				X
6	63P–44363–00	TUBE, WATER 3		1				X
7	93608–16M16	PIN, DOWEL		2				
8	97095–10045	BOLT		6				
9	92995–10100	WASHER		6				
10	92995–10600	WASHER		6				
11	90119–10008	BOLT, WITH WASHER		1				X
12	6J9–45214–00	COVER, WATER INLET		1				
13	6J9–45215–00	COVER, WATER INLET		1				
14	90152–05M08	SCREW, COUNTERSUNK		1				
15	90185–05002	NUT, SELF-LOCKING		1				
16	6K1–45371–02	TAB-TRIM		1				
17	90105–10M00	BOLT, FLANGE		1				
18	63P–45987–00	SPACER		1				
19	688–45997–01	SPACER		1				
20	92990–18200	WASHER		1				
21	90171–18M04	NUT, CASTLE		1				
22	91490–40030	PIN, COTTER		1				
23	6K1–45970–01–98	PROPELLER (3X15-1/4X15-ML)		1				UR
	6K1–45972–01–98	PROPELLER (3X13-3/4X21-ML)		1				UR
	6K1–45974–02–98	PROPELLER (3X13-3/4X19-ML1)		1				UR
	6K1–45976–00–98	PROPELLER (3X13-3/8X23-ML)		1				UR
	6K1–45978–02–98	PROPELLER (3X13-3/4X17-ML1)		1				UR

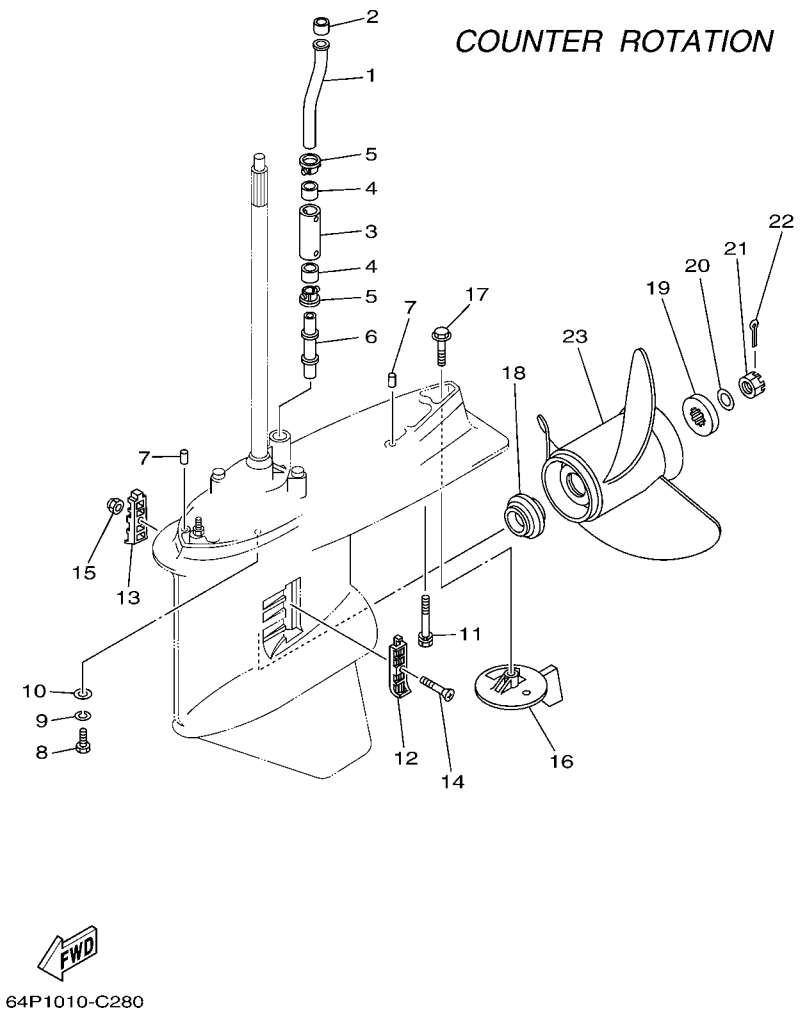

FIG. 29 LOWER CASING & DRIVE 4

REF. NO.	PART NO.	DESCRIPTION	63P1	64P1				REMARKS
23	6K1–45947–00–98	PROPELLER (3X14-1/2X17-ML)		1				UR
	6K1–45945–00–98	PROPELLER (3X14X19-ML)		1				UR
	6R1–45970–A0	PROPELLER (3X15-1/4X19-ML)		1				UR
	6R1–45972–A0	PROPELLER (3X14-7/8X21-ML)		1				UR
	6R1–45974–A0	PROPELLER (3X14-1/2X23-ML)		1				UR
	6R1–45976–A0	PROPELLER (3X15-1/4X15-ML)		1				UR
	6R1–45978–A0	PROPELLER (3X15-1/4X17-ML)		1				UR

FIG. 30 STEERING GUIDE ATTACHMENT 1

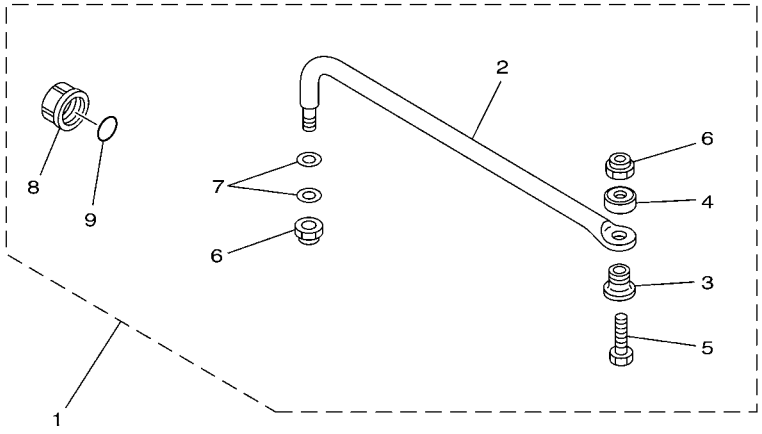

67H0100-9290

REF. NO.	PART NO.	DESCRIPTION	63P1	64P1				REMARKS
1	6E5–61350–02	STEERING GUIDE ATTACHMENT KIT	1					AP
2	6E5–61351–01	.ROD, STEERING LINK	1					
3	90387–10M61	.COLLAR	1					
4	90560–12M01	.SPACER	1					
5	6E5–61355–00	.BOLT	1					
6	90185–09M01	.NUT, SELF-LOCKING	2					
7	90201–10M20	.WASHER, PLATE	2					
8	6E5–43145–01	.CAP, CLAMP BRACKET	1					
9	93210–16275	.O-RING	1					

FIG. 31 STEERING GUIDE ATTACHMENT 2

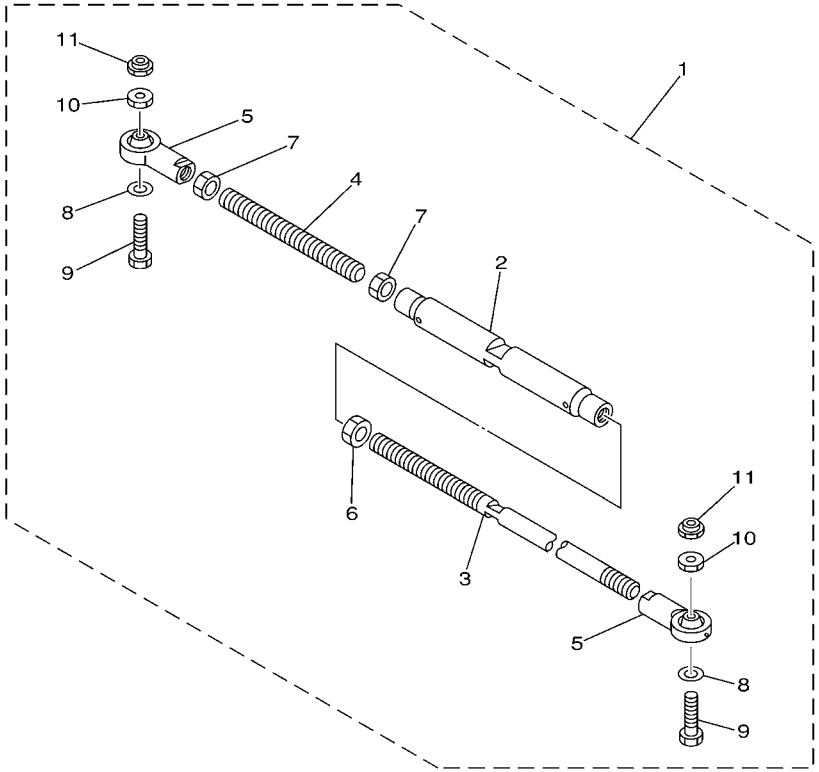

67H0100-0300

REF. NO.	PART NO.	DESCRIPTION	63P1	64P1				REMARKS
1	6E5–61301–01	TWIN KIT (L:600-800MM)		1				AP
2	6E5–61313–00	.ADJUSTER		1				
3	6E5–61311–11	.TIE BAR		1				
4	6E5–61315–00	.TIE BAR		1				
5	6E5–61303–00	.STEERING EYE COMP.		2				
6	90170–14M06	.NUT		1				
7	95380–14700	.NUT		2				
8	90201–10M76	.WASHER, PLATE		2				
9	90101–09M70	.BOLT		2				
10	90170–09M05	.NUT		2				
11	90185–09M01	.NUT, SELF-LOCKING		2				

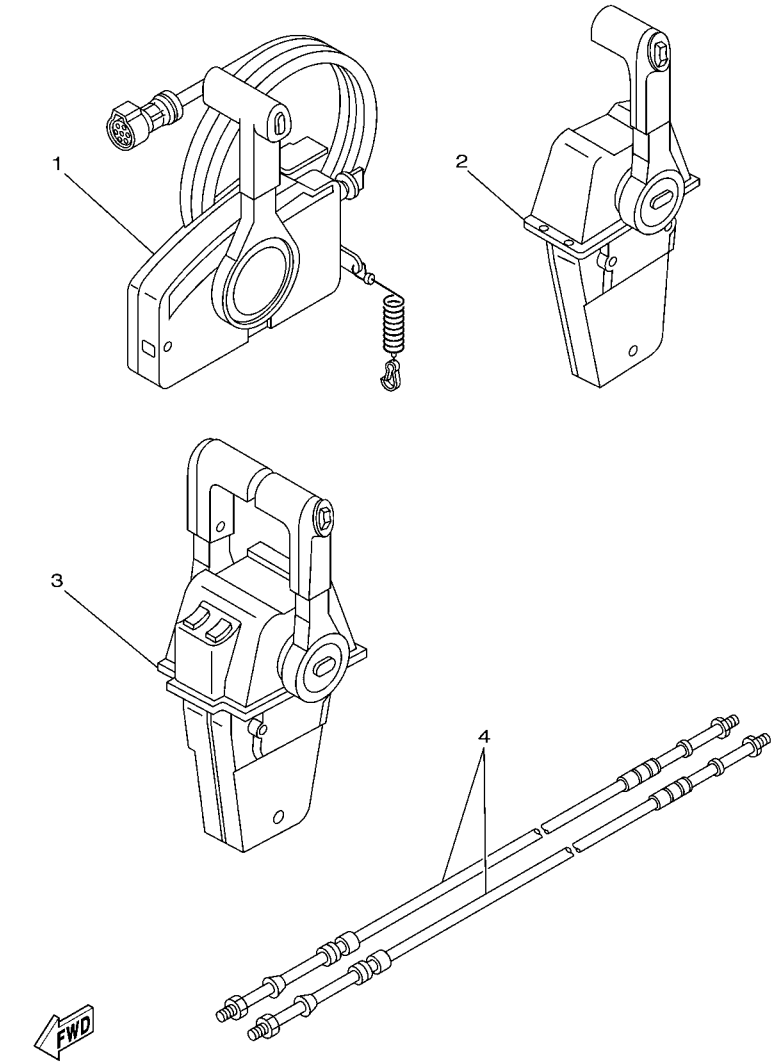

67F0ACC-0060

FIG. 32 REMOTE CONTROL BOX

REF. NO.	PART NO.	DESCRIPTION	63P1	64P1				REMARKS
1	703–48205–17	REMOTE CONTROL ASSY	1					AP WITH PT/T SW.
2	704–48205–14	REMOTE CONTROL ASSY	1					AP CAR WITH PT/T SW.
3	704–48207–23	REMOTE CONTROL ASSY		1				AP WITH PT/T SW.
4	701–48320–50	CABLE, REMOTE CONTROL L=15F	2	2				UR
	701–48320–60	CABLE, REMOTE CONTROL L=16F	2	2				UR
	701–48320–80	CABLE, REMOTE CONTROL L=17F	2	2				UR
	701–48350–00	CABLE, REMOTE CONTROL L=21F	2	2				UR
	701–48350–20	CABLE, REMOTE CONTROL L=23F	2	2				UR

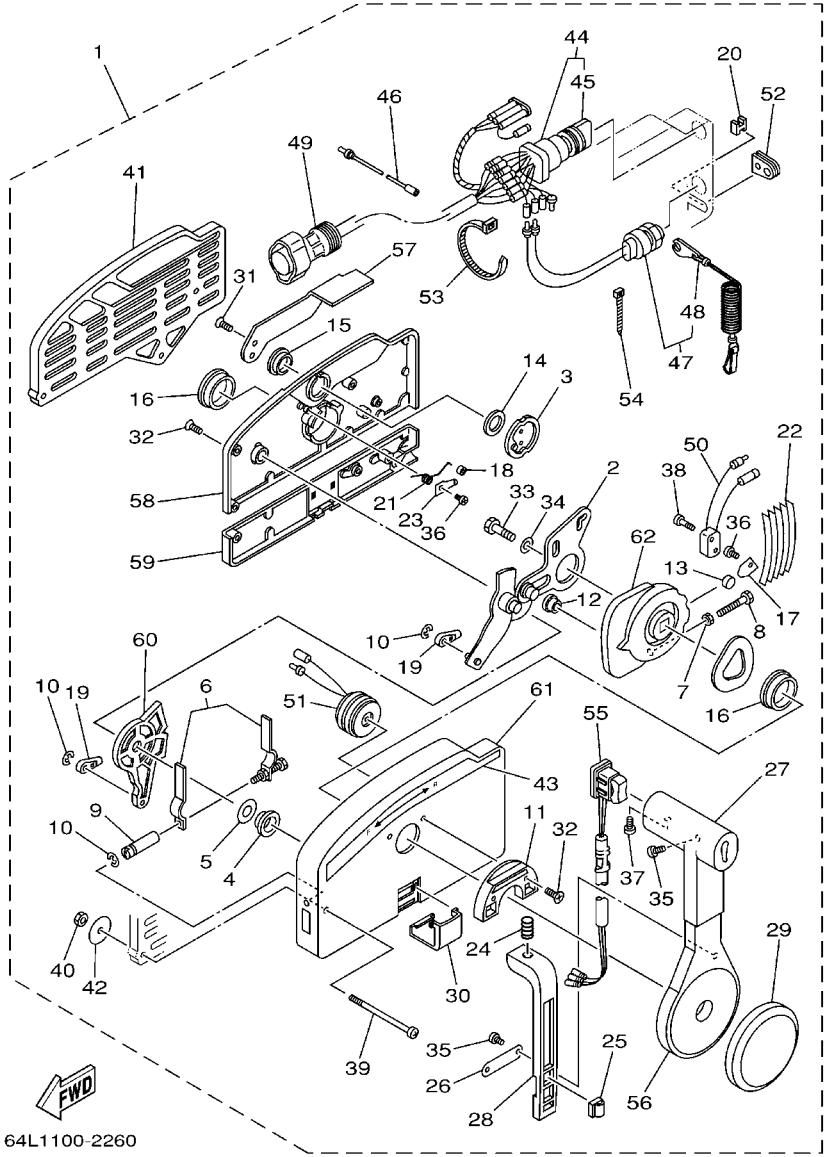

FIG. 33 REMOTE CONTROL ASSY 1

REF. NO.	PART NO.	DESCRIPTION	63P1	64P1				REMARKS
1	703–48205–17	REMOTE CONTROL ASSY	1					AP WITH PT/T SW.
2	703–48261–01	.ARM, THROTTLE	1					
3	703–48153–00	.SHAFT, FREE ACCEL.	1					
4	703–48235–00	.BUSHING	1					
5	703–48268–00	.SPACER	1					
6	703–48264–00	.THROTTLE, FRICTION	1					
7	95380–05600	.NUT	1					
8	97380–05025	.BOLT	1					
9	703–48265–00	.SHAFT, FRICTION	1					
10	93430–06024	.CIRCLIP	3					
11	703–48245–00	.PLATE, LOCK	1					
12	703–48252–00	.ROLLER, CAM	1					
13	701–48248–00	.ROLLER, FREE ACCEL.	1					
14	703–48198–00	.WASHER, WAVE	1					
15	703–48243–00	.BUSHING	1					
16	703–48236–00	.BUSHING 1	2					
17	703–48189–00	.RETAINER	1					
18	703–48234–00	.ROLLER, DETENT	1					
19	703–48345–01	.CABLE END, REMOTE CONTROL 2	2					
20	703–48358–00	.ANCHOR, CABLE	1					
21	703–48244–00	.SPRING, FREE ACCEL.	1					
22	703–48238–00	.SPRING, DETENT	5					
23	703–48246–00	.SPACER	1					
24	703–48227–00	.SPRING, NEUTRAL LOCK	1					
25	703–82594–00	.CLAMP	1					WITH PT/T SW.
26	703–48226–00	.PLATE, STOPPER	1					
27	703–48222–00	.GRIP, CONTROL LEVER	1					SINGLE

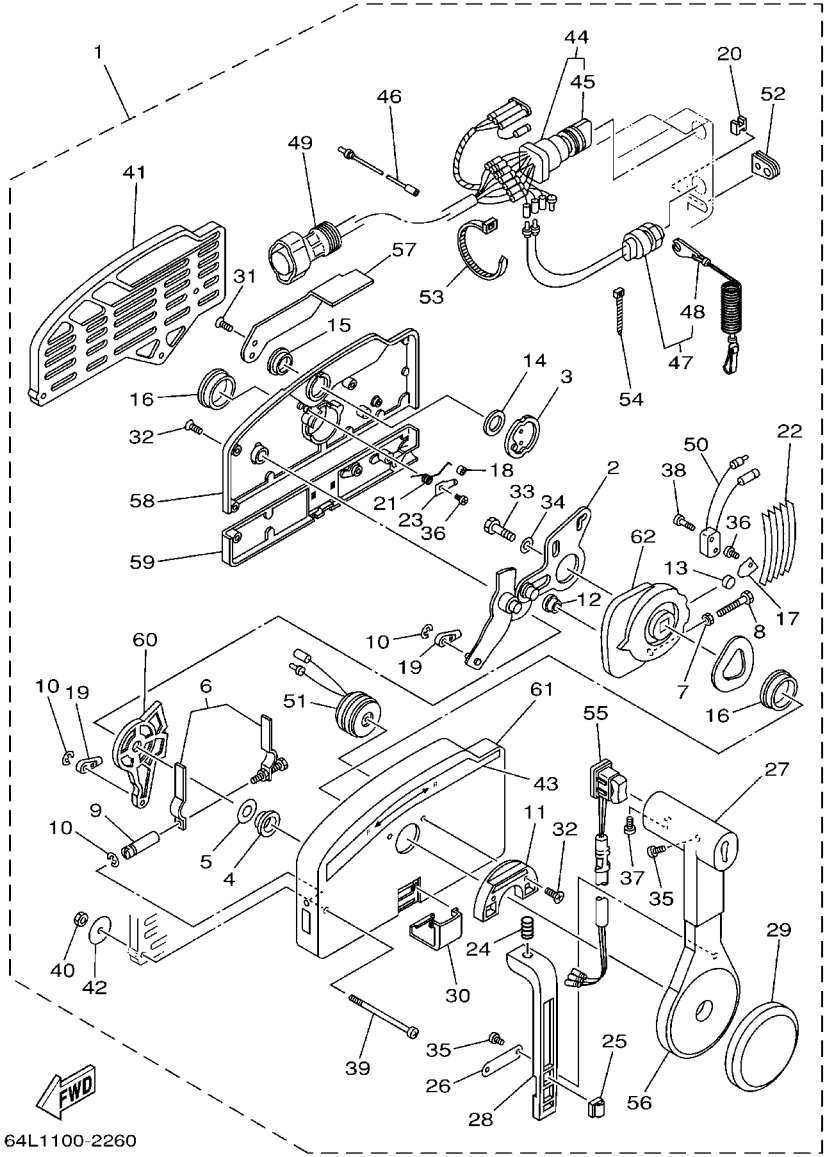

FIG. 33 REMOTE CONTROL ASSY 1

REF. NO.	PART NO.	DESCRIPTION	63P1	64P1				REMARKS
28	703–48223–00	.LOCK, NEUTRAL	1					
29	703–48225–00	.COVER	1					
30	703–48219–00	.COVER, LEAD	1					
31	703–48281–00	.SCREW	2					
32	703–48282–00	.SCREW	7					
33	97380–08030	.BOLT	1					
34	92990–08600	.WASHER, PLATE	1					
35	98580–04010	.SCREW, PAN HEAD	3					
36	98580–04006	.SCREW, PAN HEAD	2					
37	98580–05010	.SCREW, PAN HEAD	1					
38	98580–03015	.SCREW, PAN HEAD	2					
39	703–48291–10	.SCREW (M6)	3					
40	95380–06600	.NUT, HEXAGON	3					
41	703–48293–10	.SPACER, REMOTE CONTROL	1					SINGLE
42	701–48287–00	.WASHER	3					
43	703–48215–00	.GRAPHIC	1					
44	703–82510–43	.MAIN SWITCH ASSY	1					
45	703–82577–00	..CAP, KEY	1					
46	703–82531–00	.WIRE, LEAD	1					
47	688–82575–01	.ENGINE STOP SWITCH ASSY	1					
48	682–82556–00	..STOPPER	1					
49	688–8258A–20	.EXTENSION, WIRE HARNESS	1					L:5M (10P)
50	703–82540–00	.NEUTRAL SWITCH ASSY	1					
51	703–83383–02	.BUZZER	1					
52	703–48284–00	.GROMMET	1					
53	703–82591–00	.BAND	1					
54	703–82592–00	.BAND	1					

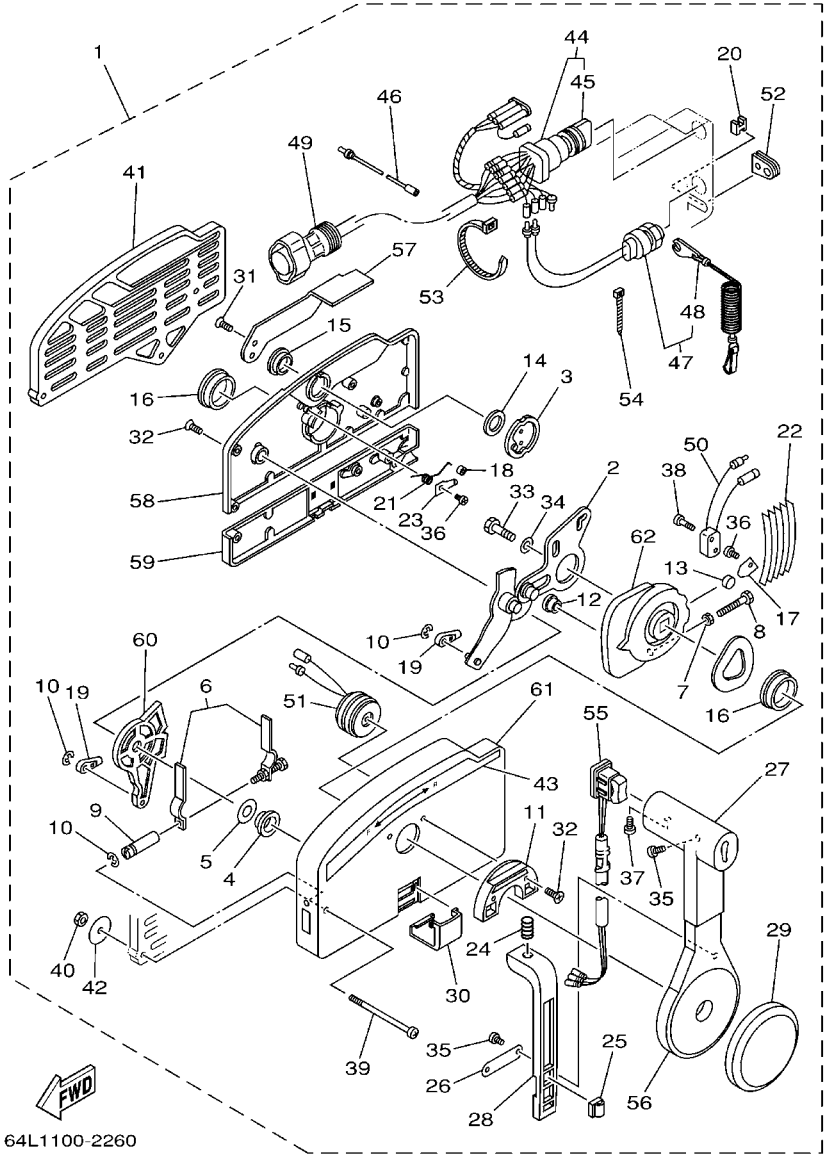

64L1100-2260

FIG. 33 REMOTE CONTROL ASSY 1

REF. NO.	PART NO.	DESCRIPTION	63P1	64P1				REMARKS
55	703–82563–02	.TRIM & TILT SWITCH ASSY	1					WITH PT/T SW.
56	703–48221–00	.LEVER, CONTROL	1					
57	703–48152–00	.KNOB, FREE ACCEL.	1					
58	703–48212–00	.BACK PLATE 1	1					
59	703–48213–00	.BACK PLATE 2	1					
60	703–48271–00	.ARM, SHIFT	1					
61	703–48211–01	.HOUSING,1	1					
62	703–48232–00	.GEAR	1					

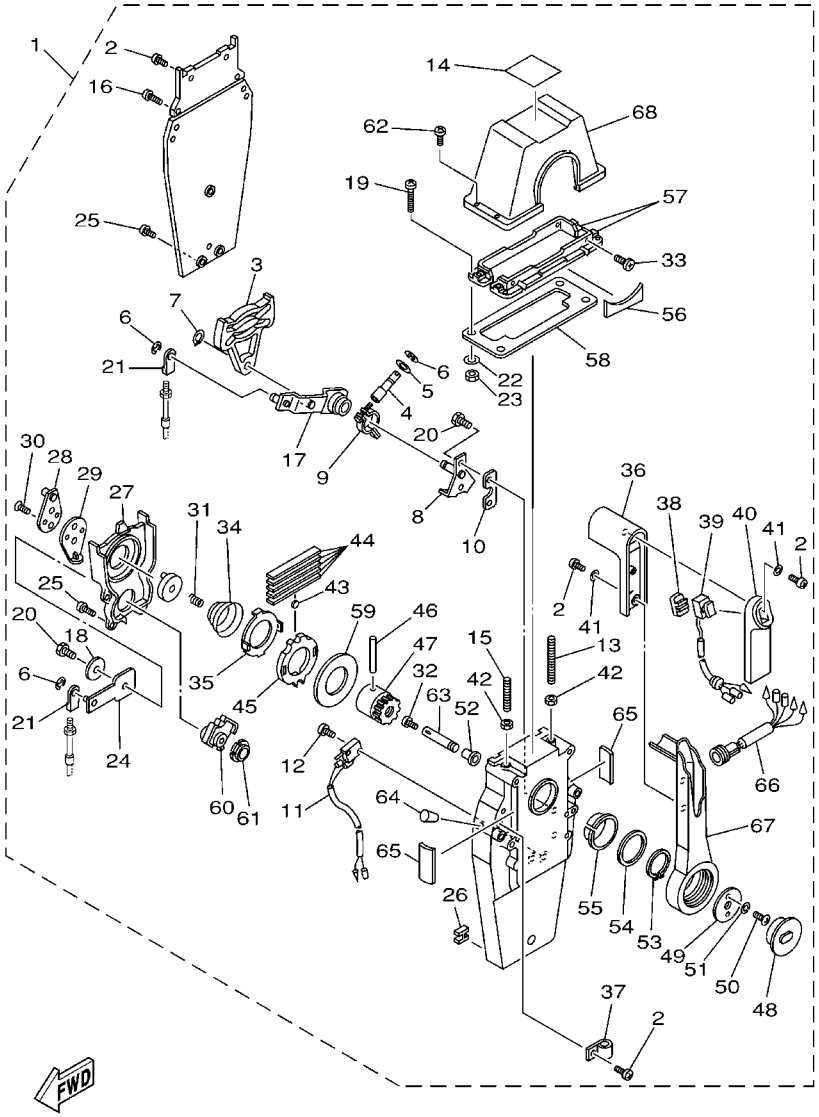

FIG. 34 REMOTE CONTROL ASSY 2

REF. NO.	PART NO.	DESCRIPTION	63P1	64P1				REMARKS
1	704–48205–14	REMOTE CONTROL ASSY	1					AP CAR WITH PT/T SW.
2	97890–05016	.SCREW, PAN HEAD	6					
3	EL8–48251–00	.PLATE, CAM	1					
4	704–48265–00	.SHAFT, FRICTION	1					
5	701–48246–00	.SPACER	1					
6	93430–06024	.CIRCLIP	4					
7	EL8–48259–00	.CIRCLIP 1	1					
8	704–48262–00	.SHAFT, THROTTLE	1					
9	704–48264–00	.THROTTLE, FRICTION	1					
10	704–48266–00	.SPACER	1					
11	704–82540–00	.NEUTRAL SWITCH ASSY	1					
12	6A5–48129–10	.SCREW 3	2					
13	EL8–48281–00	.SCREW	1					
14	704–48215–00	.GRAPHIC	1					
15	704–48281–00	.SCREW	1					
16	97890–05025	.SCREW, PAN HEAD	2					
17	704–48261–00	.ARM, THROTTLE	1					
18	EL8–48191–00	.WASHER 1	1					
19	704–48283–00	.SCREW	4					
20	97380–06018	.BOLT	3					
21	703–48345–01	.CABLE END, REMOTE CONTROL 2	2					
22	704–48287–00	.WASHER	4					
23	95380–05600	.NUT	4					
24	EL8–48271–00	.ARM, SHIFT	1					
25	EL8–48127–00	.SCREW 1	9					
26	703–48358–00	.ANCHOR, CABLE	1					
27	EL8–48231–00	.HOUSING, GEAR	1					

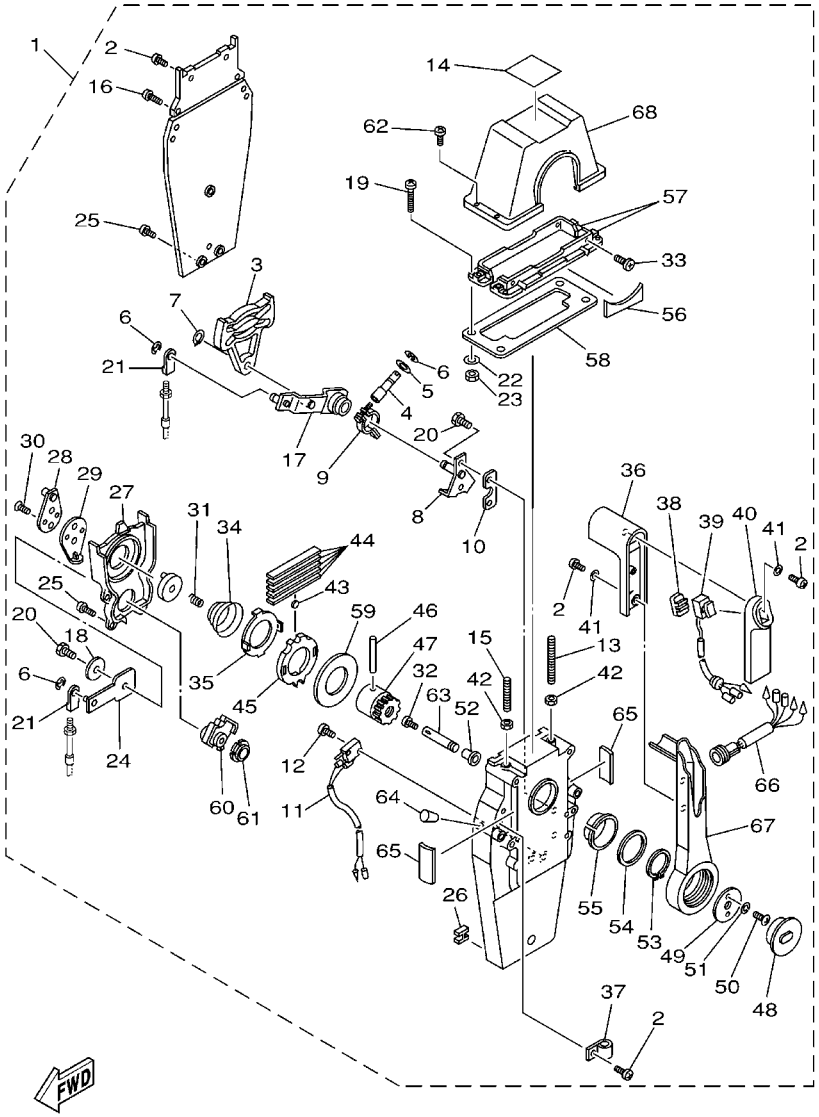

6X10100-1050

FIG. 34 REMOTE CONTROL ASSY 2

REF. NO.	PART NO.	DESCRIPTION	63P1	64P1				REMARKS
28	EL8–48241–00	.ARM, DRIVE	1					
29	EL8–48254–00	.STOPPER, THROTTLE ADJUSTING	1					
30	92780–06020	.SCREW, FLAT HEAD	2					
31	EL8–48158–00	.SPRING 1	1					
32	98580–04006	.SCREW, PAN HEAD	1					
33	98780–05018	.SCREW, FLAT HEAD	4					
34	EL8–48244–00	.SPRING, FREE ACCEL.	1					
35	EL8–48245–00	.PLATE, LOCK	1					
36	704–48222–00	.GRIP, CONTROL LEVER	1					
37	704–82594–00	.CLAMP	1					
38	704–48228–00	.HOLDER, SWITCH	1					
39	704–82563–01	.TRIM & TILT SWITCH ASSY	1					
40	704–48229–00	.GRIP, CONTROL LEVER	1					
41	92990–05300	.WASHER, INTERNAL TOOTH	3					
42	95380–06600	.NUT, HEXAGON	2					
43	701–48248–00	.ROLLER, FREE ACCEL.	1					
44	703–48238–00	.SPRING, DETENT	5					
45	EL8–48232–00	.GEAR 1	1					
46	EL8–48164–00	.PIN 2	1					
47	704–48242–00	.SHAFT, DRIVE	1					
48	704–48225–00	.COVER	1					
49	704–48192–00	.WASHER 2	1					
50	97890–06018	.SCREW, PAN HEAD	2					
51	92990–06300	.WASHER, INTERNAL TOOTH	2					
52	702–48263–00	.BUSHING	1					
53	EL8–48279–00	.CIRCLIP 2	1					
54	704–48193–00	.WASHER 3	1					

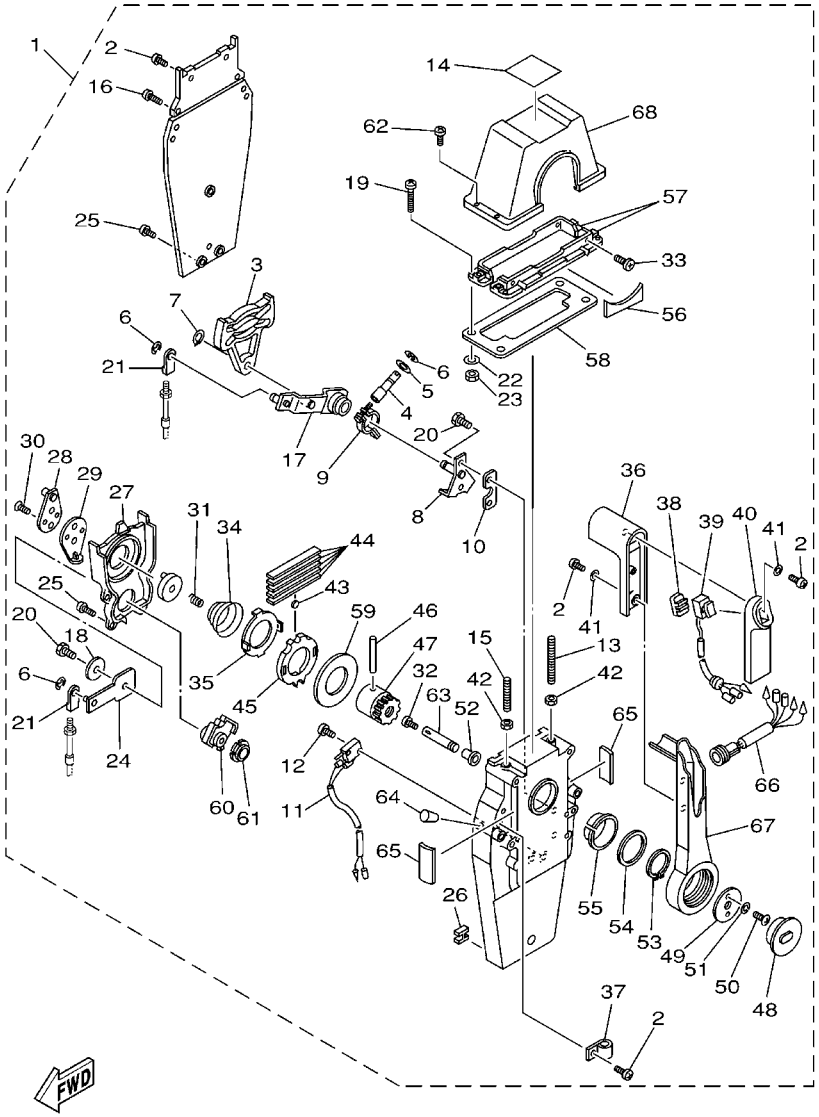

6X10100-1050

FIG. 34 REMOTE CONTROL ASSY 2

REF. NO.	PART NO.	DESCRIPTION	63P1	64P1				REMARKS
55	EL8–48234–00	.BUSHING 1	1					
56	704–48219–00	.COVER, LEAD	1					
57	704–48144–00	.PLATE, STOPPER 2	2					
58	704–48176–00	.GROMMET	1					
59	703–48192–00	.WASHER 2	1					
60	EL8–48233–00	.GEAR 2	1					
61	702–48235–00	.BUSHING	1					
62	704–48282–00	.SCREW	4					
63	EL8–48153–10	.SHAFT, FREE ACCEL.	1					
64	704–48166–00	.PLUG	1					
65	704–48284–00	.GROMMET	2					
66	704–82541–10	.WIRE, LEAD	1					
67	704–48221–00	.LEVER, CONTROL	1					
68	704–48119–00	.COVER	1					

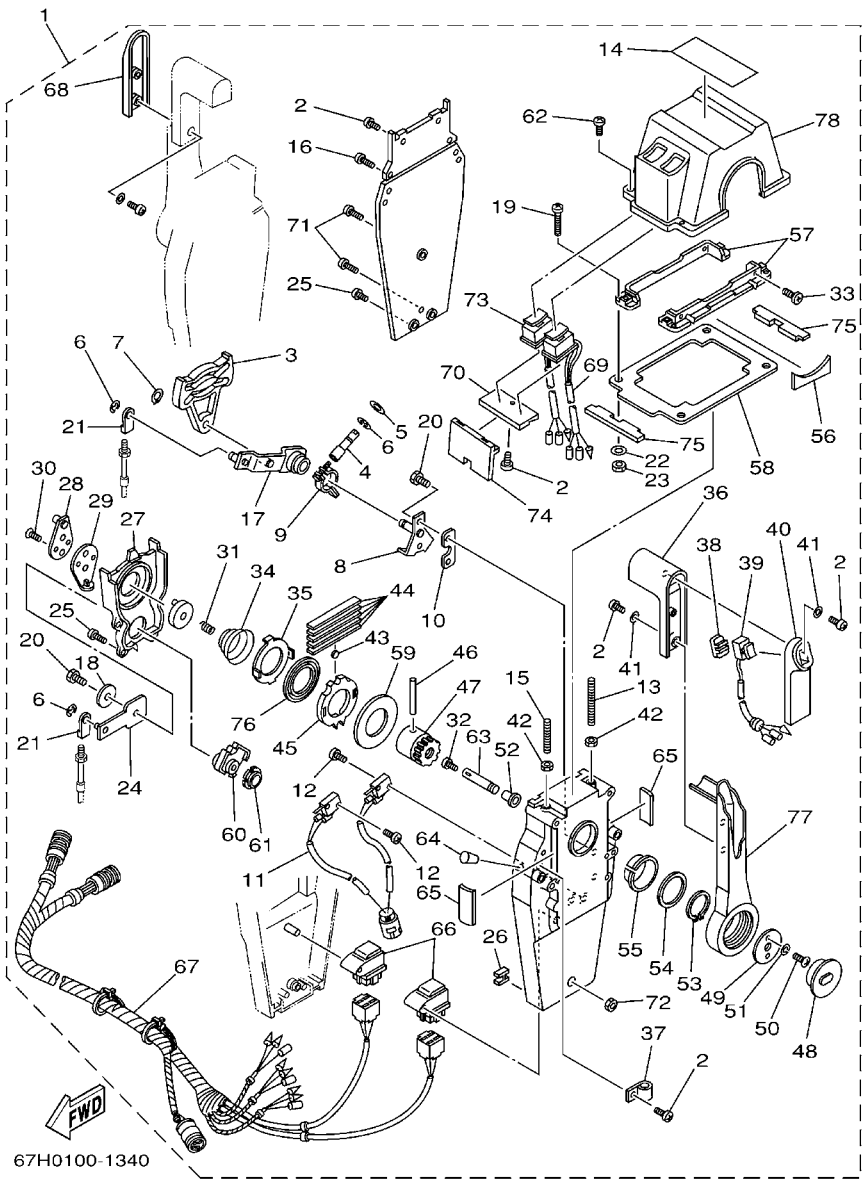

FIG. 35 REMOTE CONTROL ASSY 3

REF. NO.	PART NO.	DESCRIPTION	63P1	64P1				REMARKS
1	704–48207–23	REMOTE CONTROL ASSY		1				AP WITH PT/T SW.
2	97890–05016	.SCREW, PAN HEAD		12				
3	EL8–48251–00	.PLATE, CAM		2				
4	704–48265–00	.SHAFT, FRICTION		2				
5	701–48246–00	.SPACER		2				
6	93430–06024	.CIRCLIP		8				
7	EL8–48259–00	.CIRCLIP 1		2				
8	704–48262–00	.SHAFT, THROTTLE		2				
9	704–48264–00	.THROTTLE, FRICTION		2				
10	704–48266–00	.SPACER		2				
11	704–82540–10	.NEUTRAL SWITCH ASSY		1				
12	6A5–48129–10	.SCREW 3		4				
13	EL8–48281–00	.SCREW		2				
14	704–48215–10	.GRAPHIC		1				
15	704–48281–00	.SCREW		2				
16	97890–05025	.SCREW, PAN HEAD		4				
17	704–48261–00	.ARM, THROTTLE		2				
18	EL8–48191–00	.WASHER 1		2				
19	704–48283–00	.SCREW		4				
20	97380–06018	.BOLT		6				
21	703–48345–01	.CABLE END, REMOTE CONTROL 2		4				
22	704–48287–00	.WASHER		4				
23	95380–05600	.NUT		4				
24	EL8–48271–00	.ARM, SHIFT		2				
25	EL8–48127–00	.SCREW 1		16				
26	703–48358–00	.ANCHOR, CABLE		2				
27	EL8–48231–00	.HOUSING, GEAR		2				

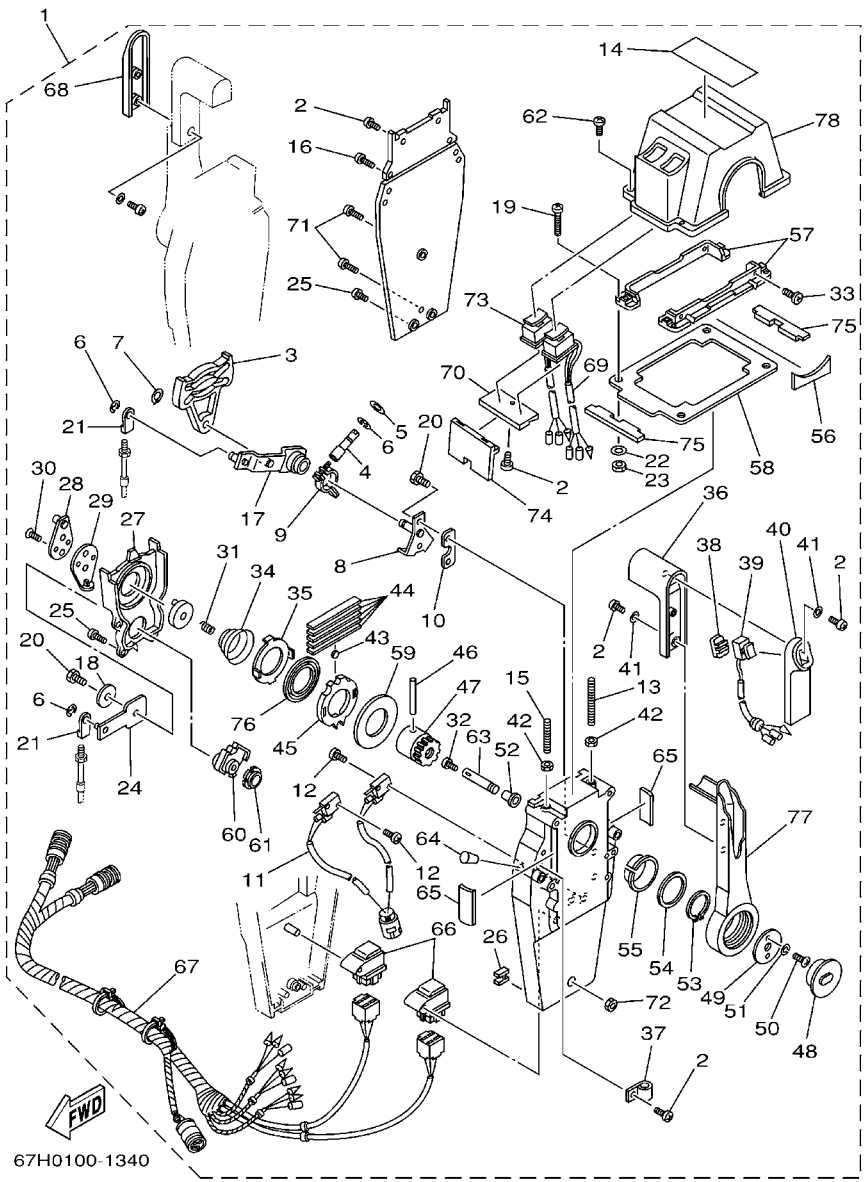

FIG. 35 REMOTE CONTROL ASSY 3

REF. NO.	PART NO.	DESCRIPTION	63P1	64P1				REMARKS
28	EL8–48241–00	.ARM, DRIVE		2				
29	EL8–48254–00	.STOPPER, THROTTLE ADJUSTING		2				
30	92780–06020	.SCREW, FLAT HEAD		4				
31	EL8–48158–00	.SPRING 1		2				
32	98580–04006	.SCREW, PAN HEAD		2				
33	98780–05018	.SCREW, FLAT HEAD		4				
34	EL8–48244–00	.SPRING, FREE ACCEL.		2				
35	EL8–48245–00	.PLATE, LOCK		2				
36	704–48222–00	.GRIP, CONTROL LEVER		2				
37	704–82594–00	.CLAMP		1				
38	704–48228–00	.HOLDER, SWITCH		1				
39	704–82563–31	.TRIM & TILT SWITCH ASSY		1				
40	704–48229–00	.GRIP, CONTROL LEVER		1				
41	92990–05300	.WASHER, INTERNAL TOOTH		6				
42	95380–06600	.NUT, HEXAGON		4				
43	701–48248–00	.ROLLER, FREE ACCEL.		2				
44	703–48238–00	.SPRING, DETENT		10				
45	EL8–48232–00	.GEAR 1		2				
46	EL8–48164–00	.PIN 2		2				
47	704–48242–00	.SHAFT, DRIVE		2				
48	704–48225–00	.COVER		2				
49	704–48192–00	.WASHER 2		2				
50	97890–06018	.SCREW, PAN HEAD		4				
51	92990–06300	.WASHER, INTERNAL TOOTH		4				
52	702–48263–00	.BUSHING		2				
53	EL8–48279–00	.CIRCLIP 2		2				
54	704–48193–00	.WASHER 3		2				

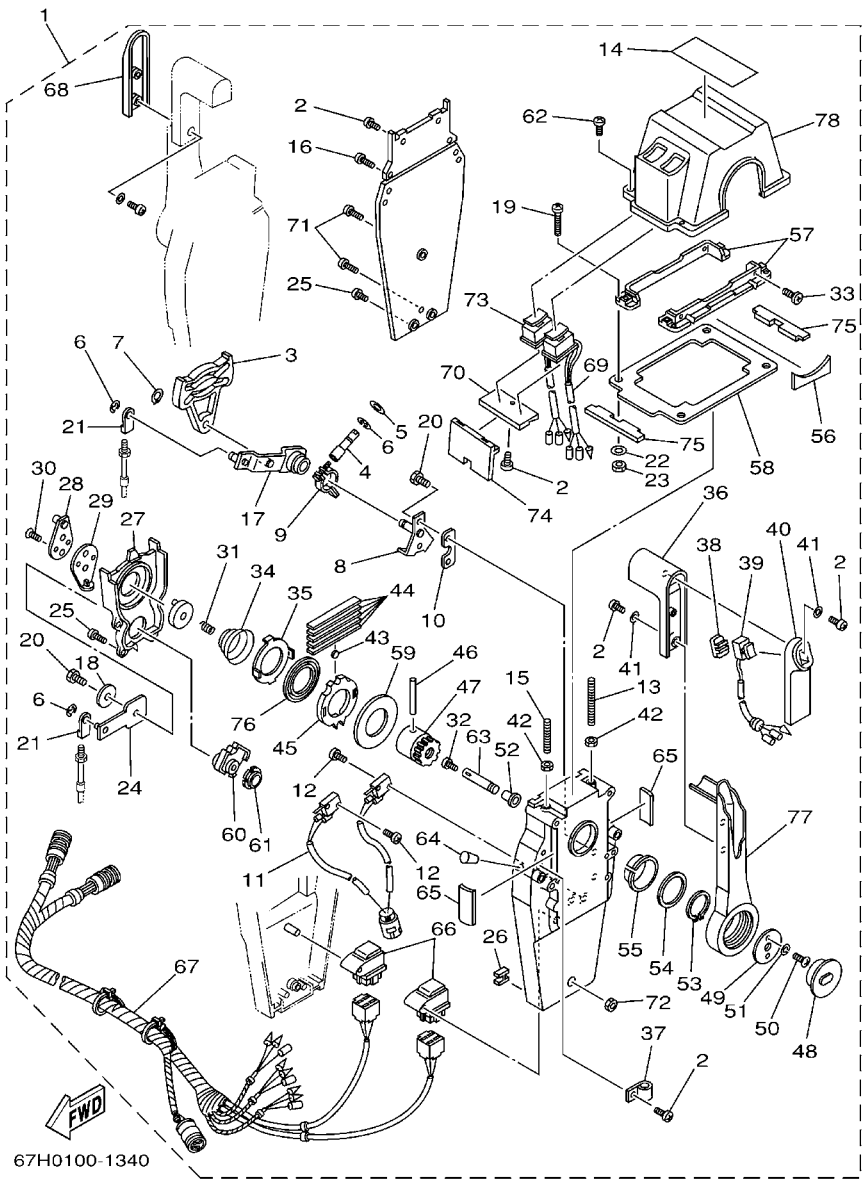

FIG. 35 REMOTE CONTROL ASSY 3

REF. NO.	PART NO.	DESCRIPTION	63P1	64P1				REMARKS
55	EL8–48234–00	.BUSHING 1		2				
56	704–48219–00	.COVER, LEAD		2				
57	704–48144–00	.PLATE, STOPPER 2		2				
58	704–48176–10	.GROMMET		1				
59	703–48192–00	.WASHER 2		2				
60	EL8–48233–00	.GEAR 2		2				
61	703–48235–00	.BUSHING		2				
62	704–48282–00	.SCREW		4				
63	EL8–48153–10	.SHAFT, FREE ACCEL.		2				
64	704–48166–00	.PLUG		2				
65	704–48284–00	.GROMMET		4				
66	704–81950–00	.RELAY ASSY		2				
67	704–82590–10	.WIRE HARNESS ASSY		1				
68	704–48229–10	.GRIP, CONTROL LEVER		1				
69	704–82563–E0	.TRIM & TILT SWITCH ASSY		1				
70	704–48228–10	.HOLDER, SWITCH		1				
71	704–48128–00	.SCREW 2		3				
72	704–48156–00	.NUT 1		1				
73	704–82563–F0	.TRIM & TILT SWITCH ASSY		1				
74	704–48285–00	.GROMMET 2		1				
75	704–48286–00	.GROMMET 3		2				
76	704–48178–00	.PLATE, SHIFT		2				
77	704–48221–00	.LEVER, CONTROL		2				
78	704–48119–20	.COVER		1				

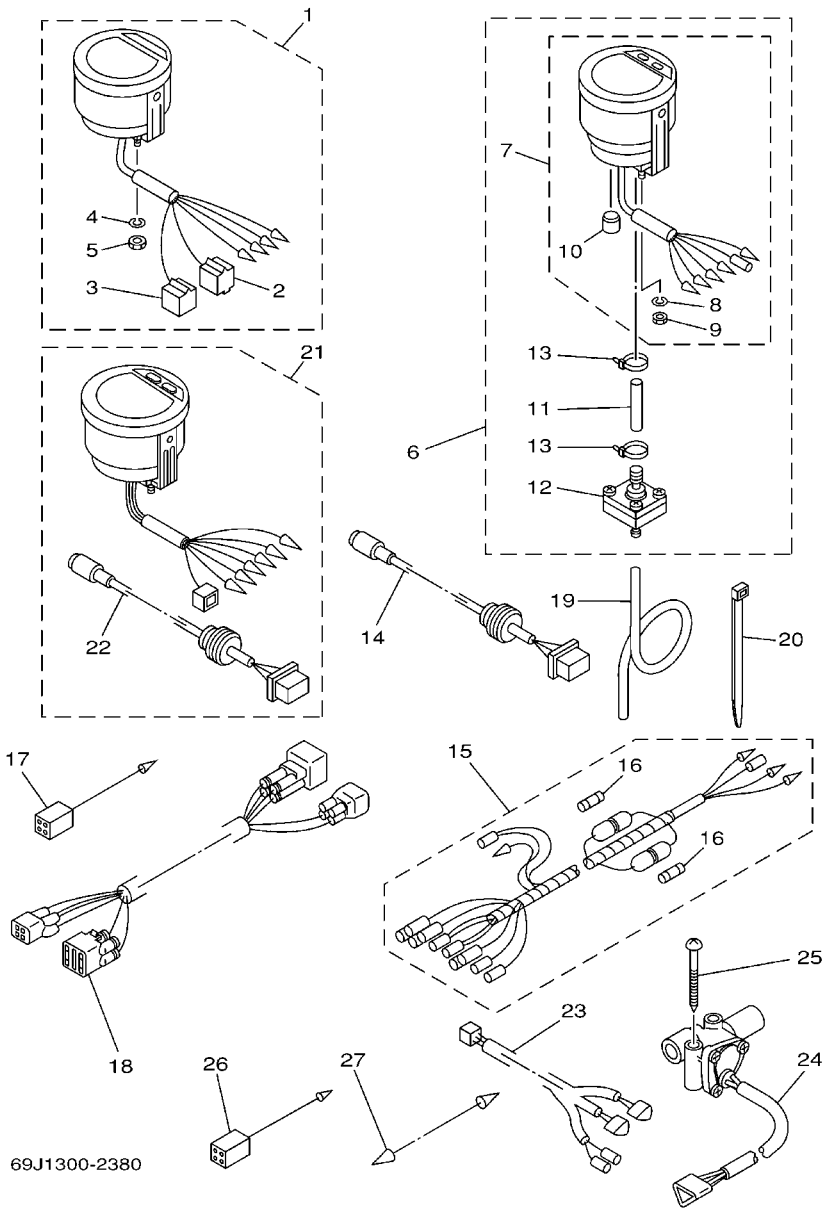

FIG. 36 METER

REF. NO.	PART NO.	DESCRIPTION	63P1	64P1				REMARKS
1	6Y5–8350T–03	TACHOMETER ASSY	1	1				AP
2	9E450–04433	.CONNECTOR	1	1				M-4-W
3	9E450–04533	.CONNECTOR	1	1				F-4-W
4	92990–04100	.WASHER, SPRING	2	2				
5	95380–04600	.NUT	2	2				
6	6Y5–83500–S5	DIGITAL SPEEDOMETER ASSY	1					AP
7	6Y5–83570–S5	.SPEEDOMETER ASSY	1					
8	92990–04100	..WASHER, SPRING	2					
9	95380–04600	..NUT	2					
10	6Y5–83533–T2	..GROMMET	1					
11	6Y5–83557–31	.TUBE	1					
12	6Y5–83728–00	.CONNECTOR ASSY	1					
13	90465–11M10	.CLAMP	2					
14	6Y5–87122–S0	CORD ASSY 1	1					AP
15	6Y5–83553–M0	WIRE, LEAD	1					AP
	6Y5–83553–00	WIRE, LEAD		1				AP
16	1E6–82151–00	.FUSE (10A)	2					FOR 6Y5-83553-M0
	1E6–82151–00	.FUSE (10A)		1				FOR 6Y5-83553-00
17	6Y5–82117–00	WIRE, LEAD (BLACK)	1					AP
18	68F–82553–80	EXTENSION, WIRE LEAD	1					AP
	68F–82553–90	EXTENSION, WIRE LEAD		1				AP
19	6Y5–83557–10	TUBE (8M)	1					AP
20	90465–11M10	CLAMP	2					AP
21	6Y5–8350F–00	FUEL MANAGEMENT METER		1				AP
22	6Y5–87122–S0	.CORD ASSY 1		1				
23	6Y5–83553–F1	WIRE, LEAD		1				AP
24	6Y5–85752–01	SENDER UNIT ASSY, FUEL METER		2				AP

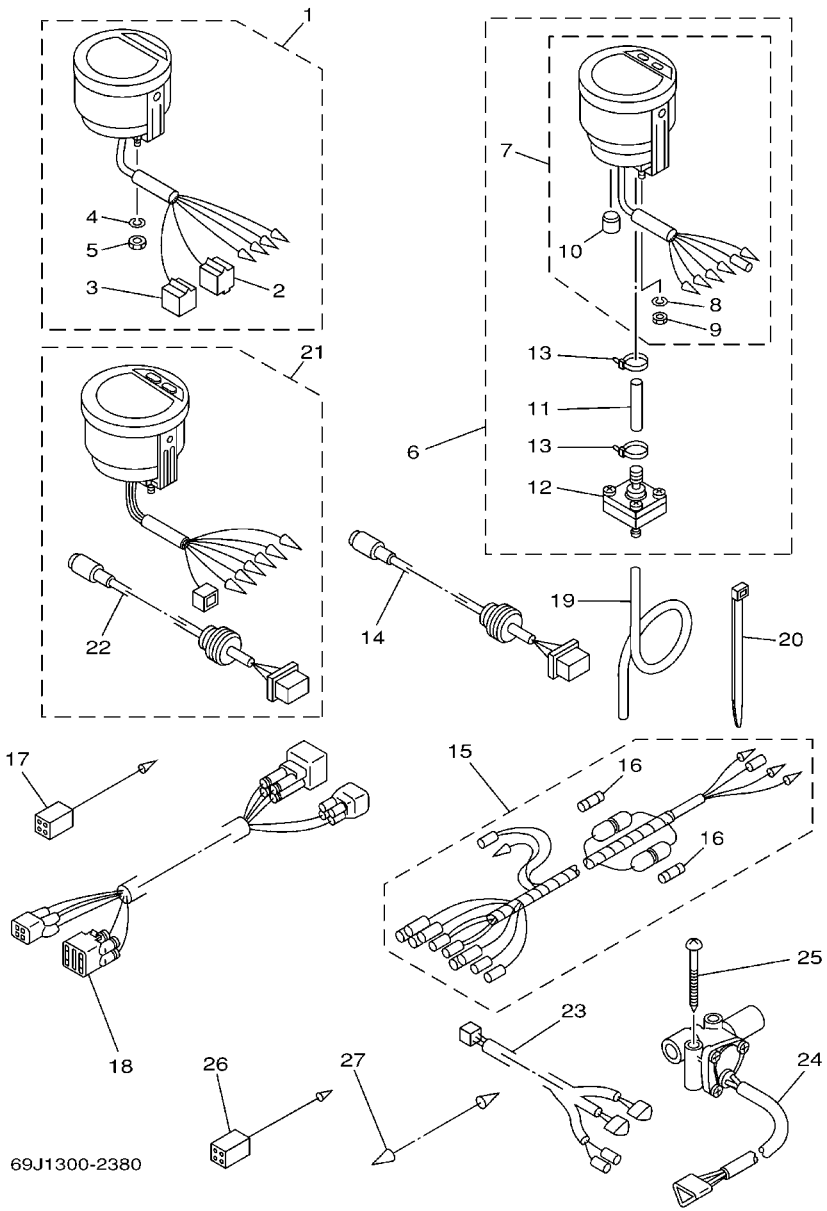

FIG. 36 METER

REF. NO.	PART NO.	DESCRIPTION	63P1	64P1				REMARKS
25	90158–06002	SCREW, WOOD		4				AP
26	6Y5–82117–00	WIRE, LEAD (BLACK)		1				AP
27	703–82531–00	WIRE, LEAD		1				AP

FIG. 37 SWITCH & PANEL 1

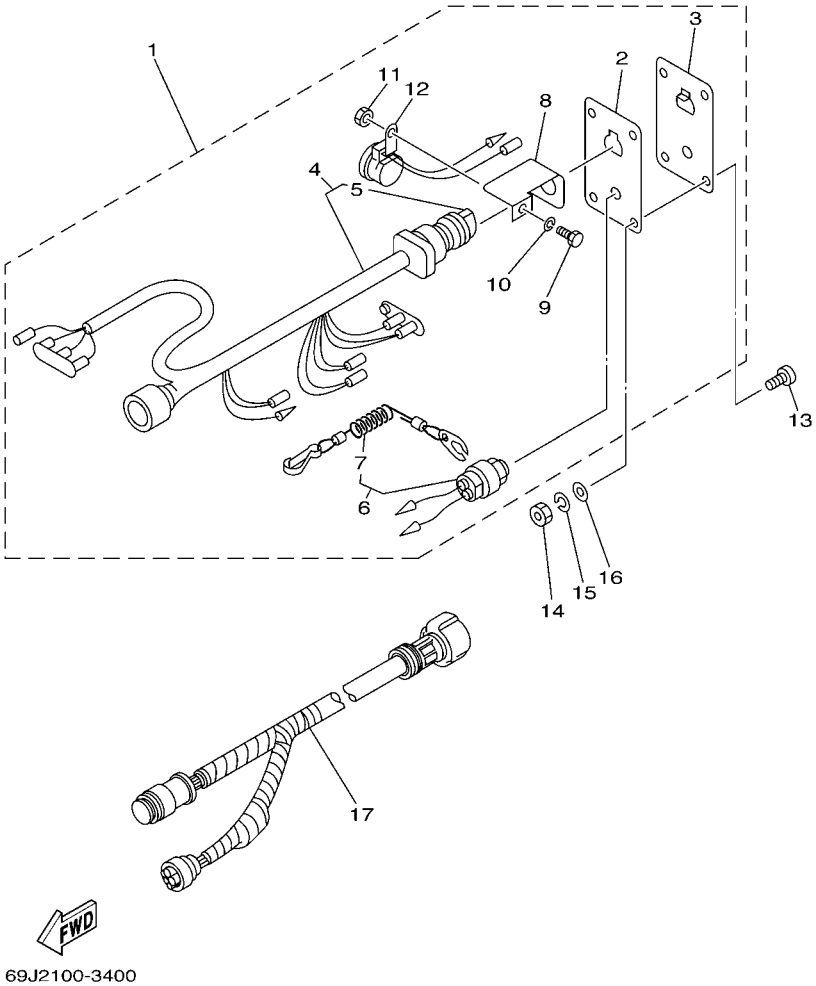

REF. NO.	PART NO.	DESCRIPTION	63P1	64P1				REMARKS
1	6R5–82570–04	PANEL SWITCH ASSY	1					AP FOR CAR
2	6R5–82588–01	.PLATE	1					
3	6R5–82571–01	.PANEL, SWITCH	1					
4	6R5–82510–02	.MAIN SWITCH ASSY	1					
5	676–82577–00	..CAP, KEY	1					
6	688–82575–01	.ENGINE STOP SWITCH ASSY	1					
7	682–82556–00	..STOPPER	1					
8	64D–82581–00	.STAY, CORD CLAMP	1					
9	97303–05012	.BOLT	1					
10	92903–05100	.WASHER, SPRING	1					
11	95303–05700	.NUT	1					
12	6R5–83383–00	.BUZZER	1					
13	90149–05M05	SCREW	4					AP FOR CAR
14	95303–05600	NUT	4					AP FOR CAR
15	92903–05100	WASHER, SPRING	4					AP FOR CAR
16	92903–05600	WASHER, PLATE	4					AP FOR CAR
17	6K1–8258A–40	EXTENSION, WIRE HARNESS	1					AP FOR CAR

FIG. 38 SWITCH & PANEL 2

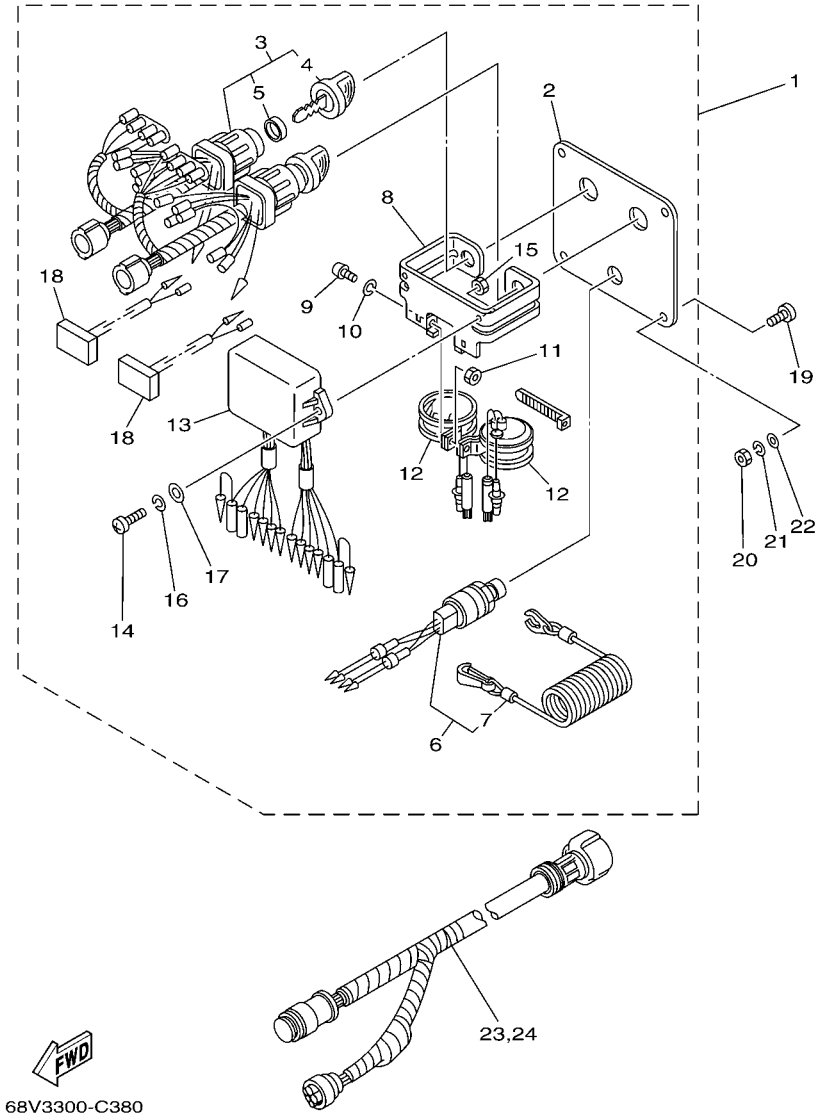

REF. NO.	PART NO.	DESCRIPTION	63P1	64P1				REMARKS
1	6K1–82570–07	PANEL SWITCH ASSY		1				AP
2	6K1–82571–01	.PANEL, SWITCH		1				
3	6K1–82510–06	.MAIN SWITCH ASSY		2				
4	703–82577–00	..CAP, KEY		1				
5	6K1–82532–00	..CAP		1				
6	6K1–82575–00	.ENGINE STOP SWITCH ASSY		1				
7	682–82556–00	..STOPPER		1				
8	6K1–83614–01	.BRACKET		1				
9	98980–05010	.SCREW, BIND		2				
10	92990–05100	.WASHER, SPRING		2				
11	95380–05600	.NUT		2				
12	688–83383–11	.BUZZER		2				
13	6K1–85830–01	.CONTROL UNIT ASSY		1				
14	98980–06020	.SCREW, BIND		2				
15	95380–06600	.NUT, HEXAGON		2				
16	92990–06100	.WASHER, SPRING		2				
17	92990–06600	.WASHER, PLATE		2				
18	6K1–81980–00	.DIODE ASSY		2				
19	90149–05M05	SCREW		4				AP
20	95380–05600	NUT		4				AP
21	92990–05100	WASHER, SPRING		4				AP
22	92990–05600	WASHER, PLATE		4				AP
23	6K1–8258A–40	EXTENSION, WIRE HARNESS		1				AP
24	61B–8258A–01	EXTENSION, WIRE HARNESS		1				AP

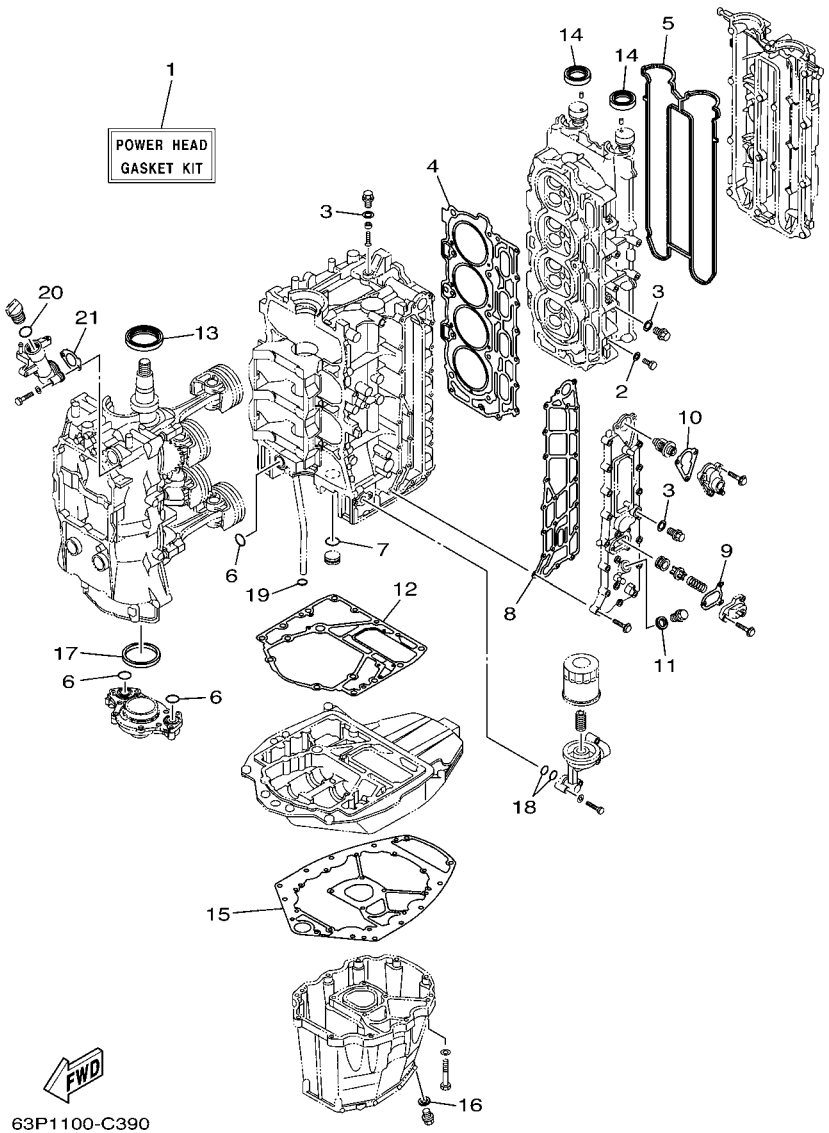

FIG. 39 REPAIR KIT 1

REF. NO.	PART NO.	DESCRIPTION	63P1	64P1				REMARKS
1	63P–W0001–00	POWER HEAD GASKET KIT	1	1				
2	90430–08143	.GASKET	4	4				
3	90430–14115	.GASKET	4	4				
4	63P–11181–00	.GASKET, CYLINDER HEAD 1	1	1				
5	63P–11193–00	.GASKET, HEAD COVER 1	1	1				
6	93210–25552	.O-RING	3	3				
7	93210–25647	.O-RING	1	1				
8	63P–41114–A0	.GASKET, EXHAUST OUTER COVER	1	1				
9	67F–12435–A0	.GASKET	1	1				
10	63P–12414–00	.GASKET, COVER	1	1				
11	90430–18130	.GASKET	1	1				
12	63P–11351–00	.GASKET, CYLINDER	1	1				
13	93102–60004	.OIL SEAL	1	1				
14	93102–38M59	.OIL SEAL	2	2				
15	63P–15312–00	.GASKET, OIL PAN	1	1				
16	90430–14M09	.GASKET	1	1				
17	69J–11355–00	.SEAL, CYLINDER 1	1	1				
18	93210–19MJ1	.O-RING	2	2				
19	93210–19MJ3	.O-RING	1	1				
20	93210–24M79	.O-RING	1	1				
21	63P–15364–A0	.GASKET, OIL PLUG	1	1				

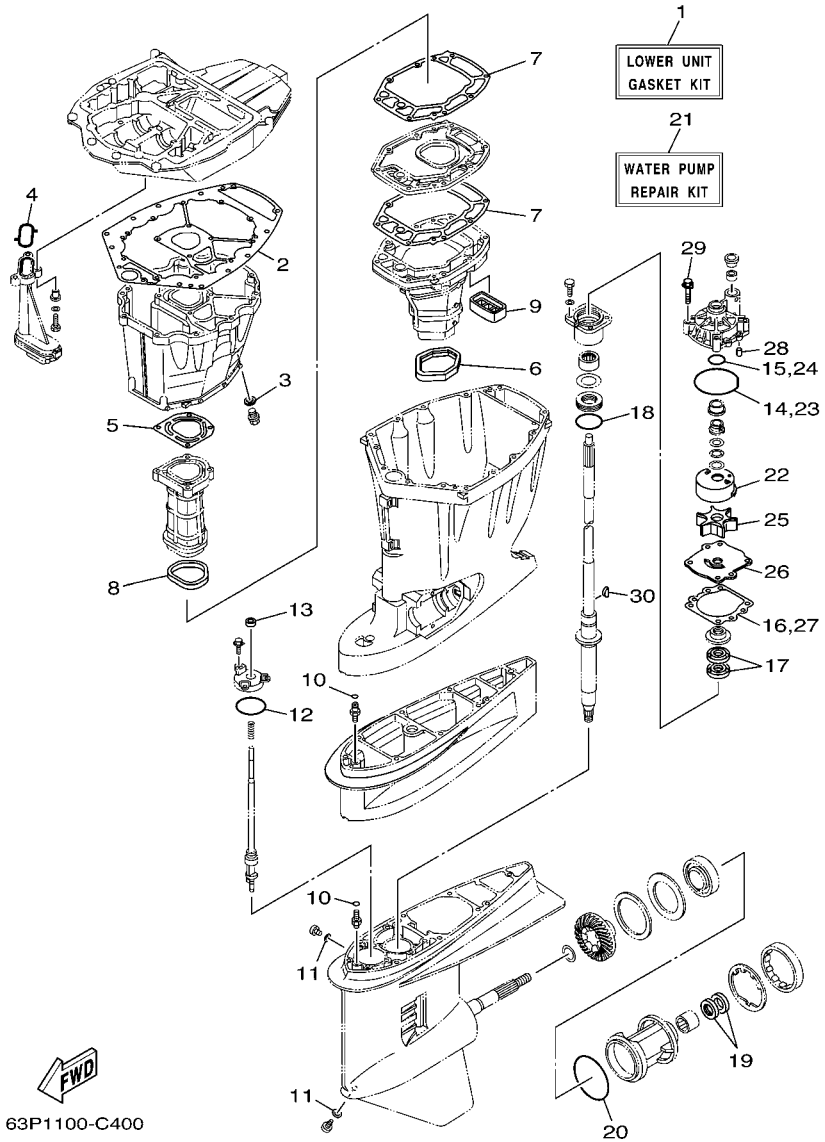

FIG. 40 REPAIR KIT 2

REF. NO.	PART NO.	DESCRIPTION	63P1	64P1				REMARKS
1	63P–W0001–20	LOWER UNIT GASKET KIT	1	1				
2	63P–15312–00	.GASKET, OIL PAN	1	1				
3	90430–14M09	.GASKET	1	1				
4	63P–13415–00	.SEAL, OIL STRAINER	1	1				
5	63P–41133–A0	.GASKET, EXHAUST MANIFOLD 1	1	1				
6	69J–45123–00	.GASKET, MUFFLER	1	1				
7	63P–41134–A0	.GASKET, EXHAUST MANIFOLD	2	2				
8	63P–41138–00	.SEAL, EXT. 1	1	1				
9	69J–45127–00	.SEAL	1	1				
10	93210–07003	.O-RING	2	2				
11	90430–08020	.GASKET	2	2				
12	93210–58144	.O-RING	1	1				
13	93106–09014	.OIL SEAL	1	1				
14	93210–86M38	.O-RING	1	1				
15	93210–37160	.O-RING	1	1				
16	6E5–44315–A0	.GASKET, WATER PUMP	1	1				
17	93101–28M16	.OIL SEAL	2	2				
18	93210–55M14	.O-RING	1	1				
19	93101–30M17	.OIL SEAL	2	2				
20	93210–97M55	.O-RING	1	1				
21	61A–W0078–A3	WATER PUMP REPAIR KIT	1	1				
22	61A–44322–02	.INSERT, CARTRIDGE	1	1				
23	93210–86M38	.O-RING	1	1				
24	93210–37160	.O-RING	1	1				
25	6E5–44352–01	.IMPELLER	1	1				
26	6G5–44323–00	.OUTER PLATE, CARTRIDGE	1	1				
27	6E5–44315–A0	.GASKET, WATER PUMP	1	1				

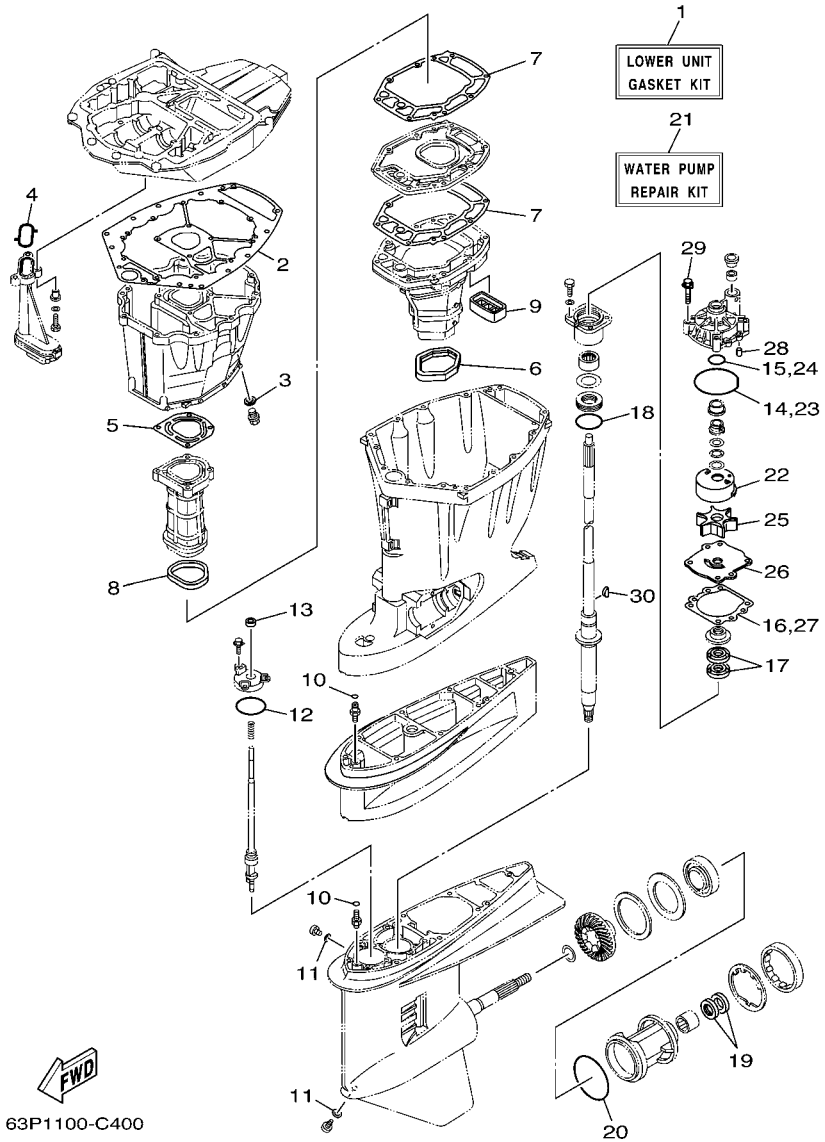

FIG. 40 REPAIR KIT 2

REF. NO.	PART NO.	DESCRIPTION	63P1	64P1				REMARKS
28	93606–12019	.PIN, DOWEL	2	2				
29	90119–08M14	.BOLT, WITH WASHER	4	4				
30	90280–04M05	.KEY, WOODRUFF	1	1				

PART NO.	REF. NO.
63P–11110–00–94	4 – 2
63P–11119–00	2 – 21
68F–11119–00	2 – 22
69J–11133–10	4 – 3
63P–11135–00	4 – 23
63P–11181–00	4 – 18
	39 – 4
63P–11191–00–1S	4 – 22
63P–11192–00	4 – 29
63P–11193–00	4 – 26
	39 – 5
63P–11197–00	2 – 10
63P–11325–00	2 – 17
68T–11325–00	5 – 2
68V–11325–00	4 – 12
	5 – 12
63P–11325–A0	2 – 19
63P–11325–B0	2 – 11
69J–11327–00–94	4 – 13
	5 – 13
67F–11328–00	4 – 16
	5 – 16
63P–11351–00	2 – 24
	39 – 12
69J–11355–00	25 – 19
	39 – 17
63P–11372–00	2 – 4
63P–11377–00	2 – 29
63P–11410–00	3 – 1
63P–11416–00	3 – 3
63P–11416–10	3 – 3
63P–11416–20	3 – 3
63P–11417–00	3 – 4
63P–11417–10	3 – 4
63P–11417–20	3 – 4
63P–11417–30	3 – 4
63P–11426–00	3 – 5
63P–11426–10	3 – 5
63P–11426–20	3 – 5
63P–11500–00	2 – 25
63P–11512–00	2 – 28
63P–11536–00	6 – 17
63P–11537–00	6 – 12
63P–11590–00	6 – 16
63P–11603–00	3 – 9
63P–11654–00	3 – 7
63P–11656–00	3 – 8
63P–11656–10	3 – 8

PART NO.	REF. NO.
63P–11656–20	3 – 8
69J–12111–00	6 – 1
69J–12113–00	6 – 3
69J–12117–00	6 – 4
69J–12118–00	6 – 5
69J–12119–00	6 – 6
69J–12121–00	6 – 2
67F–12138–40	4 – 32
67F–12138–50	4 – 32
67F–12138–60	4 – 32
69J–12153–00	6 – 7
69J–12168–00	6 – 8
69J–12168–10	6 – 8
69J–12168–20	6 – 8
69J–12168–30	6 – 8
69J–12168–40	6 – 8
69J–12168–50	6 – 8
69J–12168–60	6 – 8
69J–12168–70	6 – 8
69J–12168–80	6 – 8
69J–12168–90	6 – 8
69J–12168–A0	6 – 8
69J–12168–B0	6 – 8
69J–12168–C0	6 – 8
69J–12168–D0	6 – 8
69J–12168–E0	6 – 8
69J–12168–F0	6 – 8
69J–12168–G0	6 – 8
69J–12168–H0	6 – 8
69J–12168–J0	6 – 8
69J–12168–K0	6 – 8
69J–12168–L0	6 – 8
69J–12168–M0	6 – 8
69J–12168–N0	6 – 8
69J–12168–P0	6 – 8
69J–12168–R0	6 – 8
69J–12168–S0	6 – 8
69J–12168–T0	6 – 8
69J–12168–U0	6 – 8
69J–12168–V0	6 – 8
69J–12168–W0	6 – 8
69J–12168–X0	6 – 8
69J–12168–Y0	6 – 8
69J–12169–00	6 – 8
63P–12171–00	6 – 9
63P–12181–00	6 – 10
63P–1240H–00–1S	5 – 19
67F–12411–00	5 – 18

PART NO.	REF. NO.
63P–12414–00	5 – 20
	39 – 10
6G5–12416–00	5 – 6
67F–12435–A0	5 – 10
	39 – 9
67F–1246A–00–1S	5 – 9
68T–12572–00	18 – 28
6R3–12581–00	18 – 30
6R3–12582–00	18 – 31
6R3–12583–00	18 – 32
69J–12858–00	5 – 28
69J–13119–00	25 – 17
63P–1312A–00	8 – 25
63P–13131–00	11 – 27
63P–13300–00	25 – 14
63P–13329–00	25 – 15
69J–13338–00	25 – 16
63P–13411–00	25 – 9
63P–13415–00	25 – 11
	40 – 4
67F–13434–02	1 – 28
63P–13437–40	13 – 23
63P–13437–50	13 – 23
63P–13437–60	13 – 23
69J–13440–00	5 – 27
63P–13446–00–94	5 – 29
67F–13448–00	1 – 23
63P–13490–00	2 – 33
	10 – 3
63P–13532–00	10 – 5
63P–13557–00	8 – 19
68V–13577–00	10 – 14
69J–13593–00	9 – 21
69J–13631–00	25 – 18
63P–13641–00	8 – 11
63P–13643–00	8 – 21
63P–13645–00	8 – 15
69J–13716–00	9 – 20
63P–13761–00	8 – 22
68V–13766–00	8 – 24
63P–13769–00	8 – 31
68V–13781–00	9 – 12
63P–13784–00	9 – 17
63P–13881–00	10 – 18
63P–13898–00	8 – 30
63P–13905–00	8 – 29
63P–13906–00	9 – 6
63P–13907–00	9 – 16

PART NO.	REF. NO.
63P–13915–00	9 – 18
63P–13974–00	10 – 7
63P–13975–00	10 – 17
63P–13976–00	10 – 8
68V–1410B–00	8 – 23
63P–14148–00	9 – 1
63P–14149–00	10 – 1
63P–14191–00	9 – 10
63P–14197–00	10 – 4
63P–14200–00	8 – 1
63P–14225–00	10 – 6
69J–14225–00	9 – 9
63P–14291–00	8 – 10
69J–14321–00	8 – 2
68V–14323–00	8 – 4
68V–14331–00	8 – 3
68V–14356–00	8 – 9
68V–14386–00	9 – 14
63P–1441J–00	10 – 2
63P–14435–00	16 – 17
63P–14440–00	7 – 11
63P–14446–00	8 – 20
68V–14446–00	9 – 24
63P–14449–00	7 – 12
63P–14457–00	7 – 13
63P–14496–00	8 – 12
63P–14546–00	9 – 13
63P–14565–00	9 – 7
68V–14565–00	8 – 14
63P–14567–00	9 – 8
3CF–14594–00	8 – 8
69J–14624–01	24 – 26
63P–14711–00–5B	24 – 12
63P–14777–00	9 – 19
63P–14984–00	9 – 11
63P–14985–00	9 – 15
63P–15311–00–5B	25 – 2
63P–15312–00	25 – 1
	39 – 15
	40 – 2
63P–15316–00	25 – 6
63P–15319–00–1S	5 – 35
63P–15362–00	25 – 23
6G8–15363–00	5 – 33
63P–15364–A0	5 – 36
	39 – 21
63P–15373–00	7 – 6
63P–15377–00	25 – 24

PART NO.	REF. NO.
63P–15378–00	7 – 9
69J–21841–00	9 – 23
63P–22478–00	10 – 11
68V–2411M–00	10 – 9
68V–24149–00	11 – 34
6YK–24307–42	12 – 6
6Y2–24307–50	12 – 1
63P–24311–00	11 – 23
63P–24312–00	11 – 38
63P–24313–00	11 – 39
63P–24314–00	11 – 36
63P–24315–00	11 – 37
63P–24316–00	11 – 5
63P–24317–00	10 – 10
63P–24325–00	10 – 13
6E5–24351–51	12 – 3
6Y2–24360–60	12 – 5
68V–24374–00	11 – 30
6R3–24377–10	11 – 3
6E5–24378–00	11 – 35
69J–24379–00	9 – 2
63P–24410–00	11 – 24
68V–24411–00	11 – 29
68V–24412–00	11 – 25
68V–24413–00	11 – 31
68V–24414–00	11 – 32
63P–2441R–00	9 – 4
63P–2441T–00	9 – 5
63P–24423–00	11 – 28
68V–24444–00	11 – 33
4SV–24453–00	9 – 3
68V–24454–00	11 – 26
61A–24469–00	11 – 12
69J–24501–00	10 – 15
68V–24519–00	10 – 12
61A–24521–00	11 – 7
65L–24531–01	11 – 8
65L–24560–00	11 – 6
65L–24563–00	11 – 11
61A–24564–00	11 – 9
65L–24564–00	11 – 13
63P–24566–00	11 – 17
65L–24577–00	11 – 10
69J–24599–00	10 – 16
68V–2481H–00	10 – 19
67F–28100–01	11 – 45
67F–2812A–00	15 – 39
6A1–28176–00	18 – 52

PART NO.	REF. NO.
61H–2819R–31	11 – 44
63P–41113–00–1S	5 – 1
63P–41114–A0	5 – 4
	39 – 8
63P–41131–00–5B	24 – 9
63P–41133–A0	24 – 10
	40 – 5
63P–41134–A0	24 – 17
	40 – 7
63P–41137–00	24 – 1
63P–41138–00	24 – 19
	40 – 8
63P–41213–00	19 – 44
63P–41237–00	19 – 50
6H4–41237–00	8 – 16
682–41238–01	8 – 18
63P–42154–00	19 – 39
63P–42157–00	19 – 51
68V–42171–00	19 – 52
66K–42510–01–8D	21 – 9
63P–42541–00	18 – 33
63P–42610–00–8D	1 – 1
63P–42613–00	1 – 14
63P–42615–00	18 – 2
63P–42617–00	1 – 17
63P–42629–00	1 – 16
63P–42643–00–94	1 – 11
63P–42644–00–94	1 – 13
63P–42647–00–94	1 – 4
60V–42651–01	1 – 7
63P–42662–00	1 – 27
68F–42663–00	1 – 12
69J–42663–00	1 – 8
63P–42677–00	1 – 18
63P–42678–00	1 – 19
63P–42681–00	1 – 21
63P–42682–00	1 – 22
63P–42710–00–8D	18 – 1
648–42715–00	19 – 30
63P–42716–00	18 – 35
61A–42717–00	18 – 27
63P–42717–00	18 – 19
63P–42718–00	18 – 20
69J–42723–00–8D	16 – 20
6E5–42724–00	24 – 8
63P–42725–00	18 – 22
6H1–42726–21	18 – 24
61A–42727–00	18 – 42

PART NO.	REF. NO.
63P–42738–00–5B	18 – 18
63P–42741–00–8D	18 – 36
6H4–42748–00	18 – 48
68F–42753–00	18 – 49
63P–42756–00	18 – 44
63P–42811–00	18 – 43
63P–42815–00–8D	18 – 6
63P–42816–00–8D	18 – 7
63P–42818–00	18 – 10
68F–42828–00–5B	18 – 8
64E–43111–02–8D	20 – 1
64E–43112–02–8D	20 – 9
64E–43126–00	20 – 34
64E–43131–01	20 – 14
64E–43139–02	21 – 1
64D–43144–00	18 – 15
6G5–43144–00	20 – 25
6E5–43145–01	30 – 8
6G5–43148–10	20 – 30
6G5–43181–02	20 – 27
6G5–43185–02	20 – 28
64E–43311–10–8D	20 – 21
63P–43376–00	21 – 6
63P–43800–00–4D	22 – 1
64E–43802–00	23 – 8
64E–43805–00	23 – 37
64E–4380F–00	23 – 33
64E–4380J–00	23 – 30
63P–43810–00	22 – 6
6E5–43814–02	22 – 13
64E–43816–00	23 – 17
64E–43817–00	22 – 5
64E–43817–10	23 – 19
64E–43818–01	22 – 32
64E–4381G–00	22 – 27
64E–43820–00	22 – 15
64E–43821–00	22 – 16
64E–43822–00	22 – 17
64E–43825–01	22 – 2
64E–43827–00	23 – 22
64E–43828–00	22 – 22
64E–43829–00	22 – 23
64E–4382G–00	22 – 29
64E–43830–00	23 – 4
64E–43831–00	23 – 2
64E–43841–00	23 – 7
64E–43843–00	23 – 6
64E–43843–10	23 – 38

PART NO.	REF. NO.
64E–4384J–00	22 – 18
64E–43850–00	23 – 15
64E–43851–00	23 – 11
64E–43855–00	23 – 14
64E–43858–00	23 – 12
6E5–43858–00	22 – 28
72X–43858–00	23 – 5
64E–43859–00	23 – 13
64E–43860–00	23 – 20
6E5–43862–00	22 – 10
6G5–43863–00	23 – 10
6E5–43864–00	22 – 20
6G5–43864–00	22 – 19
64E–43865–00	23 – 16
6G5–43865–00	23 – 35
64E–43866–00	22 – 9
64E–43867–00	22 – 8
64E–43868–00	23 – 3
64E–43869–00	22 – 26
6H1–4386K–10	23 – 29
6E5–43872–00	22 – 12
64E–43873–00	23 – 24
6E5–43874–01	22 – 21
64E–43875–00	23 – 25
64E–43879–00	23 – 27
64E–43879–10	23 – 26
64E–4387A–00	23 – 23
67H–43880–01	23 – 28
64E–43883–00	22 – 11
64E–4388E–00	22 – 25
64E–4388E–10	23 – 1
64E–4388J–00	22 – 3
64E–43891–00	23 – 31
64E–43892–00	23 – 34
6E5–43896–00	23 – 9
64E–43897–00	22 – 24
64E–43898–00	22 – 7
63P–44117–00–1S	19 – 9
63P–44118–00–8D	19 – 25
63P–44120–00	19 – 20
63P–44121–00	19 – 18
63P–44122–00	19 – 15
69J–44135–00	19 – 45
63P–44150–00	26 – 18
63P–44150–10	26 – 18
64P–44150–10	28 – 19
63P–44176–00–1S	19 – 8
61A–44311–01	26 – 25

PART NO.	REF. NO.
61A–44311–01	28 – 26
6E5–44312–00	26 – 30
	27 – 5
	28 – 31
	29 – 5
6E5–44315–A0	26 – 34
	28 – 35
	40 – 16
61A–44322–02	26 – 26
	28 – 27
	40 – 22
6G5–44323–00	26 – 33
	28 – 34
	40 – 26
6E5–44352–01	26 – 31
	28 – 32
	40 – 25
63P–44361–00	27 – 1
	29 – 1
63P–44362–00	27 – 3
	29 – 3
63P–44363–00	27 – 6
	29 – 6
6E5–44365–00	26 – 29
	27 – 2
	28 – 30
	29 – 2
6E5–44366–00	24 – 29
69J–44391–00	18 – 26
63P–44511–00–94	21 – 37
63P–44514–00–94	21 – 30
6G5–44526–00	20 – 3
69J–44533–00	21 – 23
68V–44551–00–8D	21 – 14
63P–44553–00–8D	21 – 26
60V–44555–00–94	21 – 17
63P–44555–00–94	21 – 17
63P–44556–00–8D	21 – 27
61A–44575–00	21 – 16
63P–45111–00–8D	24 – 21
69J–45123–00	24 – 13
	40 – 6
69J–45127–00	24 – 20
	40 – 9
6H3–45155–00	24 – 30
63P–45181–00–5B	24 – 18
63P–45211–00–8D	24 – 36
6J9–45214–00	27 – 12

PART NO.	REF. NO.
6J9–45214–00	29 – 12
6J9–45215–00	27 – 13
	29 – 13
6G5–45251–02	20 – 2
63P–45300–00–8D	26 – 1
63P–45300–10–8D	26 – 1
64P–45300–10–8D	28 – 1
6J9–45301–05–8D	26 – 2
	28 – 2
6E5–45318–00	24 – 24
6E5–45321–00	26 – 14
	28 – 15
6E5–45331–00–94	26 – 37
	28 – 38
6J9–45332–00–8D	26 – 61
6K1–45332–01–8D	28 – 62
688–45341–10	26 – 7
	28 – 8
6E5–45344–00	26 – 43
	28 – 44
6J9–45371–01	27 – 16
6K1–45371–02	29 – 16
688–45375–00	26 – 11
	28 – 12
663–45376–00–94	26 – 10
	28 – 11
63P–45378–00	24 – 37
	26 – 12
	28 – 13
63P–45379–00	24 – 34
6G5–45383–01	26 – 71
	28 – 73
6G5–45384–02	26 – 72
	28 – 74
63P–45501–00	26 – 46
63P–45501–10	26 – 46
	28 – 47
61A–45527–00	26 – 24
	28 – 25
6G5–45536–01	26 – 9
	28 – 10
61A–45538–00	26 – 21
	28 – 22
63P–45551–00	26 – 47
	28 – 48
63P–45560–00	26 – 49
64P–45560–00	28 – 50
6G5–45567–01–10	26 – 5

PART NO.	REF. NO.
6G5–45567–01–10	28 – 6
6G5–45567–01–12	26 – 5
	28 – 6
6G5–45567–01–15	26 – 5
	28 – 6
6G5–45567–01–18	26 – 5
	28 – 6
6G5–45567–01–30	26 – 5
	28 – 6
6G5–45567–01–40	26 – 5
	28 – 6
6G5–45567–01–50	26 – 5
	28 – 6
64P–45570–00	28 – 64
63P–45571–00	26 – 63
6K1–45576–00	28 – 65
6G5–45576–10	26 – 64
6G5–45577–02–10	26 – 68
	28 – 71
6G5–45577–02–12	26 – 68
	28 – 71
6G5–45577–02–15	26 – 68
	28 – 71
6G5–45577–02–18	26 – 68
	28 – 71
6G5–45577–02–30	26 – 68
	28 – 71
6G5–45577–02–40	26 – 68
	28 – 71
6G5–45577–02–50	26 – 68
	28 – 71
6K1–45578–01–10	28 – 67
6K1–45578–01–12	28 – 67
6K1–45578–01–15	28 – 67
6K1–45578–01–18	28 – 67
6K1–45578–01–30	28 – 67
6K1–45578–01–40	28 – 67
6K1–45578–01–50	28 – 67
6E5–45587–01–10	26 – 40
	28 – 41
6E5–45587–01–12	26 – 40
	28 – 41
6E5–45587–01–15	26 – 40
	28 – 41
6E5–45587–01–18	26 – 40
	28 – 41
6E5–45587–01–30	26 – 40
	28 – 41

PART NO.	REF. NO.
6E5–45587–01–40	26 – 40
	28 – 41
6E5–45587–01–50	26 – 40
	28 – 41
6J9–45611–01	26 – 51
6K1–45611–10	28 – 52
63P–45631–00	26 – 59
	28 – 60
6E5–45633–01	26 – 60
	28 – 61
6E5–45634–01	26 – 53
	28 – 54
6K1–45641–01	28 – 53
6E5–45641–03	26 – 52
6G5–45930–00–98	27 – 23
6G5–45932–00–98	27 – 23
6G5–45941–00–98	27 – 23
6G5–45943–01–98	27 – 23
6K1–45945–00–98	29 – 23
6G5–45945–01–98	27 – 23
6K1–45947–00–98	29 – 23
6G5–45947–01–98	27 – 23
6G5–45949–00–98	27 – 23
6K1–45970–01–98	29 – 23
6G5–45970–02–98	27 – 23
6J9–45970–10	27 – 23
6R1–45970–A0	29 – 23
6R4–45970–A0	27 – 23
6K1–45972–01–98	29 – 23
6G5–45972–02–98	27 – 23
6J9–45972–10	27 – 23
6R1–45972–A0	29 – 23
6R4–45972–A0	27 – 23
6K1–45974–02–98	29 – 23
6G5–45974–03–98	27 – 23
6J9–45974–10	27 – 23
6R1–45974–A0	29 – 23
6R4–45974–A0	27 – 23
6K1–45976–00–98	29 – 23
6G5–45976–01–98	27 – 23
6J9–45976–10	27 – 23
6R1–45976–A0	29 – 23
6R4–45976–A0	27 – 23
6K1–45978–02–98	29 – 23
6G5–45978–03–98	27 – 23
6R1–45978–A0	29 – 23
6R4–45978–A0	27 – 23
63P–45987–00	27 – 18

PART NO.	REF. NO.
63P–45987–00	29 – 18
688–45997–01	27 – 19
	29 – 19
63P–46241–00	6 – 15
704–48119–00	34 – 68
704–48119–20	35 – 78
EL8–48127–00	34 – 25
	35 – 25
704–48128–00	35 – 71
6A5–48129–10	34 – 12
	35 – 12
704–48144–00	34 – 57
	35 – 57
703–48152–00	33 – 57
703–48153–00	33 – 3
EL8–48153–10	34 – 63
	35 – 63
704–48156–00	35 – 72
EL8–48158–00	34 – 31
	35 – 31
EL8–48164–00	34 – 46
	35 – 46
704–48166–00	34 – 64
	35 – 64
704–48176–00	34 – 58
704–48176–10	35 – 58
704–48178–00	35 – 76
703–48189–00	33 – 17
EL8–48191–00	34 – 18
	35 – 18
703–48192–00	34 – 59
	35 – 59
704–48192–00	34 – 49
	35 – 49
704–48193–00	34 – 54
	35 – 54
703–48198–00	33 – 14
704–48205–14	32 – 2
	34 – 1
703–48205–17	32 – 1
	33 – 1
704–48207–23	32 – 3
	35 – 1
703–48211–01	33 – 61
703–48212–00	33 – 58
703–48213–00	33 – 59
703–48215–00	33 – 43
704–48215–00	34 – 14

PART NO.	REF. NO.
704–48215–10	35 – 14
703–48219–00	33 – 30
704–48219–00	34 – 56
	35 – 56
703–48221–00	33 – 56
704–48221–00	34 – 67
	35 – 77
703–48222–00	33 – 27
704–48222–00	34 – 36
	35 – 36
703–48223–00	33 – 28
703–48225–00	33 – 29
704–48225–00	34 – 48
	35 – 48
703–48226–00	33 – 26
703–48227–00	33 – 24
704–48228–00	34 – 38
	35 – 38
704–48228–10	35 – 70
704–48229–00	34 – 40
	35 – 40
704–48229–10	35 – 68
EL8–48231–00	34 – 27
	35 – 27
703–48232–00	33 – 62
EL8–48232–00	34 – 45
	35 – 45
EL8–48233–00	34 – 60
	35 – 60
703–48234–00	33 – 18
EL8–48234–00	34 – 55
	35 – 55
702–48235–00	34 – 61
703–48235–00	33 – 4
	35 – 61
703–48236–00	33 – 16
703–48238–00	33 – 22
	34 – 44
	35 – 44
EL8–48241–00	34 – 28
	35 – 28
704–48242–00	34 – 47
	35 – 47
703–48243–00	33 – 15
703–48244–00	33 – 21
EL8–48244–00	34 – 34
	35 – 34
703–48245–00	33 – 11

PART NO.	REF. NO.
EL8–48245–00	34 – 35
	35 – 35
701–48246–00	34 – 5
	35 – 5
703–48246–00	33 – 23
701–48248–00	33 – 13
	34 – 43
	35 – 43
EL8–48251–00	34 – 3
	35 – 3
703–48252–00	33 – 12
EL8–48254–00	34 – 29
	35 – 29
EL8–48259–00	34 – 7
	35 – 7
704–48261–00	34 – 17
	35 – 17
703–48261–01	33 – 2
704–48262–00	34 – 8
	35 – 8
702–48263–00	34 – 52
	35 – 52
703–48264–00	33 – 6
704–48264–00	34 – 9
	35 – 9
703–48265–00	33 – 9
704–48265–00	34 – 4
	35 – 4
704–48266–00	34 – 10
	35 – 10
703–48268–00	33 – 5
703–48271–00	33 – 60
EL8–48271–00	34 – 24
	35 – 24
EL8–48279–00	34 – 53
	35 – 53
703–48281–00	33 – 31
704–48281–00	34 – 15
	35 – 15
EL8–48281–00	34 – 13
	35 – 13
703–48282–00	33 – 32
704–48282–00	34 – 62
	35 – 62
704–48283–00	34 – 19
	35 – 19
703–48284–00	33 – 52
704–48284–00	34 – 65

PART NO.	REF. NO.
704–48284–00	35 – 65
704–48285–00	35 – 74
704–48286–00	35 – 75
701–48287–00	33 – 42
704–48287–00	34 – 22
	35 – 22
703–48291–10	33 – 39
703–48293–10	33 – 41
701–48320–50	32 – 4
701–48320–60	32 – 4
701–48320–80	32 – 4
6E5–48344–00	19 – 6
703–48345–01	33 – 19
	34 – 21
	35 – 21
701–48350–00	32 – 4
701–48350–20	32 – 4
703–48358–00	33 – 20
	34 – 26
	35 – 26
63P–48531–00	19 – 1
63P–48532–00	19 – 2
63P–48538–00	19 – 4
6E5–61301–01	31 – 1
6E5–61303–00	31 – 5
6E5–61311–11	31 – 3
6E5–61313–00	31 – 2
6E5–61315–00	31 – 4
6E5–61350–02	30 – 1
6E5–61351–01	30 – 2
6E5–61355–00	30 – 5
68V–81145–01	8 – 6
68V–81146–01	8 – 26
68V–81147–00	8 – 28
63P–8132G–00	13 – 20
67F–81332–00	13 – 15
63P–81336–00	15 – 41
63P–81337–00	13 – 18
63D–81345–20	13 – 5
63P–81410–00	13 – 4
63P–81450–00	13 – 1
63P–81460–00	13 – 2
63P–81673–00	13 – 6
63P–81800–00	17 – 1
69J–81801–00	17 – 5
67F–81807–00	17 – 10
67F–81808–00	17 – 8
67F–81809–00	17 – 19

PART NO.	REF. NO.
67F–81810–00	17 – 3
67F–81813–00	17 – 6
68F–81820–00	17 – 7
67F–81821–00	17 – 13
6K7–81826–10	17 – 24
69J–81828–00	17 – 25
68V–8182L–00	8 – 7
67F–81830–00	17 – 17
67F–81832–00	17 – 11
67F–81836–00	17 – 12
69J–81839–00	17 – 21
67F–8183R–00	17 – 16
60V–8183T–00	17 – 18
69J–81840–00	17 – 4
67F–81841–00	17 – 14
69J–81842–00	17 – 20
63P–81845–00	13 – 11
67F–81846–00	17 – 26
67F–81850–00	17 – 2
67F–81857–00	17 – 9
69J–81869–00	17 – 23
67F–81891–00	17 – 15
63P–81919–00	15 – 42
63P–81919–10	15 – 43
60V–81925–00	17 – 28
63P–81941–00	17 – 22
63P–81942–00	15 – 29
63P–81948–00	15 – 17
68V–8194A–00	15 – 4
63P–81950–00	15 – 11
704–81950–00	35 – 66
68V–81953–00	15 – 5
68F–8195A–00	15 – 33
63P–81960–00	14 – 17
63P–81975–00	14 – 19
6K1–81980–00	38 – 18
63P–82105–00	16 – 1
6Y5–82117–00	36 – 17
6G5–82119–00	15 – 10
6E5–82148–00	20 – 6
66K–82149–00	20 – 24
1E6–82151–00	36 – 16
63P–82151–00	15 – 32
67F–82151–00	15 – 34
67F–82151–10	15 – 35
60V–82157–00	15 – 40
63P–82170–00	15 – 31
63P–82310–00	14 – 1

PART NO.	REF. NO.
663–82317–01	13 – 19
63P–82341–00	14 – 2
63P–82342–00	14 – 3
63P–82343–00	14 – 7
63P–82344–00	14 – 8
67F–82361–00	14 – 4
67F–82362–00	14 – 5
67F–82377–00	18 – 51
63V–82377–50	20 – 39
63P–82380–00	8 – 27
63P–82388–00	14 – 15
6R5–82510–02	37 – 4
6K1–82510–06	38 – 3
703–82510–43	33 – 44
703–82531–00	33 – 46
	36 – 27
6K1–82532–00	38 – 5
703–82540–00	33 – 50
704–82540–00	34 – 11
704–82540–10	35 – 11
704–82541–10	34 – 66
68F–82553–80	36 – 18
68F–82553–90	36 – 18
682–82556–00	33 – 48
	37 – 7
	38 – 7
69J–82560–00	16 – 24
69J–82563–00	16 – 19
704–82563–01	34 – 39
703–82563–02	33 – 55
704–82563–31	35 – 39
704–82563–E0	35 – 69
704–82563–F0	35 – 73
6R5–82570–04	37 – 1
6K1–82570–07	38 – 1
6K1–82571–01	38 – 2
6R5–82571–01	37 – 3
6K1–82575–00	38 – 6
688–82575–01	33 – 47
	37 – 6
676–82577–00	37 – 5
703–82577–00	33 – 45
	38 – 4
6E3–8257H–00	18 – 53
64D–82581–00	37 – 8
68F–82582–00	17 – 29
69J–82587–00	16 – 21
6E9–82588–00	16 – 25

PART NO.	REF. NO.
61A–82588–01	19 – 11
6R5–82588–01	37 – 2
61B–8258A–01	38 – 24
688–8258A–10	16 – 27
688–8258A–20	33 – 49
6K1–8258A–40	37 – 17
	38 – 23
63P–82590–00	16 – 4
63P–82590–10	16 – 4
704–82590–10	35 – 67
703–82591–00	33 – 53
703–82592–00	33 – 54
63P–82594–00	15 – 23
703–82594–00	33 – 25
704–82594–00	34 – 37
	35 – 37
60V–8259F–00	19 – 33
69J–8259F–00	19 – 10
63P–8259L–00	9 – 22
63P–8259M–00	16 – 8
68F–82846–00	15 – 36
6R5–83383–00	37 – 12
703–83383–02	33 – 51
688–83383–11	38 – 12
6Y5–83500–S5	36 – 6
6Y5–8350F–00	36 – 21
6Y5–8350T–03	36 – 1
6Y5–83533–T2	36 – 10
6Y5–83553–00	36 – 15
6Y5–83553–F1	36 – 23
6Y5–83553–M0	36 – 15
6Y5–83557–10	36 – 19
6Y5–83557–31	36 – 11
6E5–83558–00	24 – 31
6Y5–83570–S5	36 – 7
63P–83614–00	16 – 22
6K1–83614–01	38 – 8
6K1–83623–41	13 – 26
6K1–83623–50	13 – 27
6A1–83625–41	13 – 24
6A1–83625–51	13 – 25
63P–83626–00	4 – 31
67F–83627–01	17 – 32
69J–83651–00	16 – 18
67H–83672–00	21 – 3
64E–83672–02	21 – 3
6Y5–83728–00	36 – 12
72X–85075–L0	23 – 21

PART NO.	REF. NO.
68F–85119–00	15 – 21
68F–85516–01	15 – 19
60V–85544–00	15 – 38
689–85547–00	11 – 1
68V–85548–00	15 – 27
63P–85580–00	13 – 3
6Y5–85752–01	36 – 24
61A–85790–00	16 – 14
6K1–85830–01	38 – 13
69J–85885–00	8 – 5
63P–85886–00	16 – 16
63P–8591A–00	15 – 1
63P–8591A–10	15 – 1
68F–86129–00	15 – 20
6Y5–87122–S0	36 – 14
63P–W0001–00	39 – 1
63P–W0001–20	40 – 1
63P–W0070–00	1 – 20
61A–W0078–A3	40 – 21
63P–W009A–00–1S	4 – 1
63P–W009B–00–1S	2 – 1
63P–W1164–00	3 – 6
63P–W1510–00–1S	2 – 2
90101–09M70	31 – 9
90101–12M05	20 – 40
90101–12M77	20 – 40
90105–10071	2 – 9
90105–10M00	27 – 17
	29 – 17
90109–06M80	18 – 39
90109–06M82	18 – 9
90109–06M86	16 – 23
	18 – 16
	19 – 3
90109–08019	19 – 35
90109–14M48	21 – 33
90109–14MA7	21 – 22
90110–05020	6 – 18
90119–06071	11 – 22
90119–06076	7 – 15
90119–06M10	26 – 17
	28 – 18
90119–06M18	24 – 35
90119–06M73	14 – 6
90119–06M81	2 – 15
90119–06M82	7 – 17
90119–06M83	11 – 43
90119–06MA2	2 – 23

PART NO.	REF. NO.
90119–06MA2	5 – 11
90119–06MA4	5 – 5
	14 – 18
90119–06MA6	2 – 27
90119–07234	4 – 7
90119–07235	4 – 6
90119–08M14	26 – 36
	28 – 37
	40 – 29
90119–08M22	18 – 3
90119–08M58	24 – 6
90119–08M66	2 – 16
90119–08M79	24 – 2
90119–08M91	4 – 21
90119–10007	24 – 22
90119–10008	27 – 11
	29 – 11
90119–10M06	6 – 13
90119–10MA2	27 – 11
90149–05M05	37 – 13
	38 – 19
90151–05M05	5 – 3
90151–06M02	2 – 18
90152–05M08	27 – 14
	29 – 14
90155–10001	4 – 20
90158–06002	36 – 25
90159–06M28	18 – 38
90169–05M00	15 – 30
90170–09M05	31 – 10
90170–14M06	31 – 6
90170–16M01	26 – 48
	28 – 49
90171–18M04	27 – 21
	29 – 21
90179–06M24	1 – 15
90179–08003	17 – 27
90179–24002	13 – 14
90185–05002	27 – 15
	29 – 15
90185–09M01	30 – 6
	31 – 11
90185–14M00	21 – 35
90185–22M11	20 – 19
90201–06068	11 – 16
	18 – 13
90201–06M31	19 – 40
90201–08M14	22 – 30

PART NO.	REF. NO.
90201–10M20	30 – 7
90201–10M76	31 – 8
90201–12M05	20 – 42
90201–13M01	20 – 41
90201–15M58	21 – 21
90201–16M01	21 – 34
90201–16M55	21 – 20
90201–22M01	26 – 22
	28 – 23
90201–24014	13 – 13
90201–26M59	20 – 18
90201–30M92	26 – 69
90201–35008	21 – 18
90201–38M60	21 – 10
90202–08M20	19 – 16
90202–16061	19 – 23
90202–28001	21 – 39
90202–32M19	21 – 19
90202–40M47	21 – 13
90206–10M04	19 – 41
90206–15M18	18 – 12
90206–22M19	26 – 23
	28 – 24
90250–08M07	26 – 58
	28 – 59
90280–04008	6 – 19
90280–04M05	26 – 32
	28 – 33
	40 – 30
90280–05015	13 – 12
90282–04M00	26 – 70
	28 – 72
90338–25004	2 – 7
90340–08002	26 – 6
	28 – 7
90340–14M06	4 – 10
	5 – 25
	25 – 7
90340–18M09	5 – 22
90344–51019	4 – 4
90386–06M12	19 – 19
90386–08001	7 – 14
90386–10M16	20 – 29
90386–12069	19 – 32
90386–15M73	18 – 11
90386–16M66	19 – 22
90386–22M98	20 – 35
	22 – 33

PART NO.	REF. NO.
90386–25M31	20 – 17
90386–38M32	21 – 12
90387–06010	15 – 18
90387–06038	7 – 16
90387–06M29	19 – 42
90387–06M43	18 – 41
90387–06M60	11 – 20
90387–06M64	25 – 10
90387–06M82	19 – 48
90387–08M37	18 – 5
90387–10M05	20 – 31
90387–10M08	4 – 19
90387–10M61	30 – 3
90387–14004	21 – 38
90430–08020	26 – 8
	28 – 9
	40 – 11
90430–08143	4 – 9
	39 – 2
90430–14115	2 – 13
	4 – 11
	5 – 26
	39 – 3
90430–14M09	25 – 8
	39 – 16
	40 – 3
90430–18130	5 – 23
	39 – 11
90445–070F1	24 – 33
90445–10027	5 – 24
90445–11020	1 – 26
90445–13511	11 – 2
90445–13M01	12 – 2
90462–10023	7 – 8
90464–07M41	14 – 11
90464–11121	14 – 16
90464–12004	11 – 40
90464–16013	2 – 31
90464–20006	7 – 10
90464–20181	18 – 45
90464–20258	18 – 50
90464–23199	15 – 25
	18 – 47
90465–08M63	20 – 22
90465–08M99	5 – 39
90465–10032	1 – 2
90465–11M10	7 – 7
	11 – 4

PART NO.	REF. NO.
90465–11M10	18 – 25
	20 – 20
	21 – 5
	24 – 32
	36 – 13
90465–11M59	7 – 5
90465–13M18	15 – 26
90465–13M30	18 – 23
90467–15M14	2 – 30
90468–18008	19 – 7
90480–06M19	12 – 4
90480–10627	15 – 22
90480–10M23	11 – 21
90480–12072	4 – 30
90480–13M24	18 – 40
90480–20M05	5 – 8
90480–22M81	18 – 4
90501–11M10	26 – 20
	28 – 21
90501–12082	19 – 29
90501–16M11	5 – 7
90501–16M37	26 – 54
	28 – 55
90506–16M34	18 – 17
90506–20011	20 – 33
90508–20M31	19 – 31
90560–12M01	30 – 4
91490–40030	27 – 22
	29 – 22
91690–30010	19 – 5
91690–30020	20 – 32
91690–50014	7 – 4
91809–08006	4 – 5
91814–18001	2 – 5
92780–06020	34 – 30
	35 – 30
92903–05100	37 – 10
92903–05600	37 – 16
92903–06600	15 – 16
92903–08100	17 – 34
92903–08600	7 – 3
	17 – 31
92907–04600	4 – 25
92907–06600	25 – 13
92990–04100	36 – 4
92990–05100	38 – 10
92990–05300	34 – 41
	35 – 41

PART NO.	REF. NO.
92990–05600	38 – 22
92990–06100	1 – 5
	38 – 16
92990–06300	34 – 51
	35 – 51
92990–06600	20 – 12
	24 – 28
	38 – 17
92990–08600	33 – 34
92990–10600	16 – 15
92990–18200	27 – 20
	29 – 20
92995–04100	19 – 13
92995–06100	11 – 15
	13 – 9
	14 – 13
	15 – 8
	16 – 6
	20 – 5
92995–06600	1 – 10
	4 – 15
	5 – 15
	11 – 19
	13 – 10
	14 – 14
	15 – 3
	16 – 7
	20 – 8
	25 – 21
92995–08100	20 – 16
92995–08600	16 – 3
	24 – 15
	25 – 4
	26 – 45
	28 – 46
92995–10100	21 – 29
	24 – 41
	27 – 9
	29 – 9
92995–10600	21 – 8
	24 – 4
	27 – 10
	29 – 10
92995–14600	21 – 25
93101–28M16	26 – 38
	28 – 39
	40 – 17
93101–30M17	26 – 66

PART NO.	REF. NO.
93101–30M17	28 – 69
	40 – 19
93102–08M43	23 – 36
93102–38M59	6 – 14
	39 – 14
93102–60004	3 – 2
	39 – 13
93106–09014	26 – 16
	28 – 17
	40 – 13
93210–07003	24 – 38
	26 – 13
	28 – 14
	40 – 10
93210–09165	19 – 21
93210–10M74	22 – 4
93210–16275	30 – 9
93210–19MJ1	5 – 30
	39 – 18
93210–19MJ3	25 – 25
	39 – 19
93210–24M79	5 – 34
	39 – 20
93210–25552	2 – 14
	25 – 22
	39 – 6
93210–25647	2 – 8
	39 – 7
93210–30682	11 – 42
93210–37160	26 – 28
	28 – 29
	40 – 15
93210–37MH7	21 – 11
93210–55M14	26 – 42
	28 – 43
	40 – 18
93210–58144	26 – 15
	28 – 16
	40 – 12
93210–86M38	26 – 27
	28 – 28
	40 – 14
93210–97M55	26 – 67
	28 – 70
	40 – 20
93306–209U0	26 – 62
93311–928U5	26 – 3
	28 – 3

PART NO.	REF. NO.
93315–425V3	26 – 50
	28 – 51
93315–43061	26 – 65
	28 – 68
93317–330U2	26 – 39
	28 – 40
93332–00048	28 – 63
93332–000V3	26 – 4
93341–440U5	28 – 66
93341–465U4	28 – 5
93341–930V2	26 – 41
	28 – 42
93390–000U2	28 – 4
93410–16006	19 – 24
93410–22M11	20 – 36
93410–37M04	21 – 15
93420–36M01	24 – 25
93430–06024	33 – 10
	34 – 6
	35 – 6
93501–04M02	19 – 28
93503–16003	26 – 57
	28 – 58
93507–32009	26 – 55
	28 – 56
93511–32017	26 – 56
	28 – 57
93605–10108	6 – 11
93606–12019	2 – 3
	26 – 35
	28 – 36
	40 – 28
93606–19M23	24 – 16
93608–16M16	24 – 5
	25 – 5
	27 – 7
	29 – 7
93700–06M01	19 – 34
93700–06M03	19 – 36
	20 – 13
94702–00391	4 – 33
95303–05600	37 – 14
95303–05700	37 – 11
95333–08600	17 – 33
95380–04600	36 – 5
95380–05600	33 – 7
	34 – 23
	35 – 23

PART NO.	REF. NO.
95380–05600	38 – 11
95380–05700	8 – 17
95380–06600	1 – 6
	18 – 37
	33 – 40
	34 – 42
	35 – 42
	38 – 15
95380–12600	20 – 43
95380–14600	21 – 24
95380–14700	31 – 7
95780–10300	21 – 7
97013–06020	15 – 15
97013–08020	7 – 2
97013–08045	17 – 30
97027–06025	25 – 12
97075–06020	4 – 14
	5 – 14
97075–08035	24 – 14
	25 – 3
97075–10040	21 – 28
97075–10045	21 – 31
	24 – 3
97080–08016	22 – 31
97095–06010	15 – 7
	20 – 7
97095–06012	5 – 40
	16 – 12
97095–06014	11 – 18
97095–06016	1 – 9
	11 – 14
	13 – 21
	15 – 2
97095–06020	16 – 5
	18 – 14
	25 – 26
97095–06025	14 – 12
	19 – 43
97095–06030	4 – 27
	20 – 4
97095–06035	13 – 8
	19 – 49
97095–06040	5 – 31
	25 – 20
97095–06045	5 – 37
97095–08014	4 – 8
97095–08016	16 – 2
97095–08020	20 – 15

PART NO.	REF. NO.
97095–08025	26 – 44
	28 – 45
97095–10045	24 – 40
	27 – 8
	29 – 8
97303–05012	37 – 9
97380–05025	33 – 8
97380–06018	34 – 20
	35 – 20
97380–08030	33 – 33
97575–06535	19 – 26
97575–08540	4 – 17
	5 – 17
	7 – 1
97575–08560	24 – 11
97575–10535	24 – 7
97595–06516	8 – 13
97595–06550	19 – 14
97607–04310	23 – 32
97780–50620	1 – 3
	15 – 37
97780–60520	18 – 29
97780–60525	21 – 2
97780–60620	15 – 6
97880–06012	20 – 11
97880–06016	24 – 27
97885–04016	19 – 12
97885–06010	13 – 16
97885–06016	21 – 4
97890–05016	34 – 2
	35 – 2
97890–05025	34 – 16
	35 – 16
97890–06018	34 – 50
	35 – 50
98507–04008	4 – 24
98580–03015	33 – 38
98580–04006	33 – 36
	34 – 32
	35 – 32
98580–04010	33 – 35
98580–05010	33 – 37
98780–05016	2 – 12
98780–05018	34 – 33
	35 – 33
98980–05010	38 – 9
98980–06020	38 – 14
99001–08600	26 – 19

PART NO.	REF. NO.
99001–08600	28 – 20
99530–08012	13 – 7
9E450–04433	36 – 2
9E450–04533	36 – 3

F150TRC/LF150TRC
F150AET/FL150AET
PARTS CATALOGUE
©2003 by Yamaha Motor Co., Ltd.
1st edition, June 2003
All rights reserved.
Any reprinting or unauthorized use
without the written permission of
Yamaha Motor Co., Ltd.
is expressly prohibited.
Printed in Japan.