YAMAHA

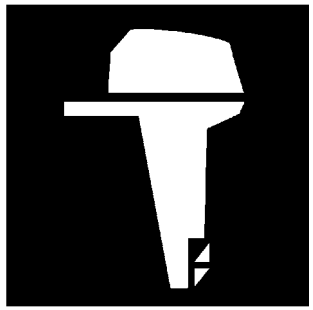

PARTS CATALOGUE
CATALOGUE DE PIECES DETACHEES

F200A'04 (60L3)
F225A'04 (69J3)
FL200A'04 (60M3)
FL225A'04 (69K3)

1C60L-300F2

(2C60L-300F2)

YAMAHA
GENUINE
Parts & Accessories

FOREWORD

This Parts Catalogue is related to the parts for the model(s) on the cover page. When you are ordering replacement parts, please refer to this Parts Catalogue and quote both part numbers and part names correctly.

1. Modifications or additions which have been made after the issue of the Parts Catalogue will be announced in the Parts News.
   It is advisable that you make the necessary corrections to the Parts Catalogue according to the Parts News.

2. Abbreviations
   The following abbreviations are used in this Parts Catalogue.

   "UR" Use specified parts number.
   "UN" Use as many as needed.
   "AP" Alternate Parts
   "LM" Locally Made (Parts need to be ordered locally)
   "F#" Frame No. (Applicable machine No.)
   "O/S" Over Size

3. The number of components for assembly
   - Parts, which are to be supplied in an assembly, are listed with a dot (.) in front of the part name as shown below.
   - The numeral appearing to the right of each component part indicates the quantity of parts for each assembly unit.

PART NO.	DESCRIPTION	Q'TY	REMARKS
2F5–83310–60	FRONT FLASHER LIGHT ASSY	2	
115–83311–60	.BULB (6V–18W)	1	

4. Applicable colours of graphics are represented in the "REMARKS" as shown below.

PART NO.	DESCRIPTION	Q'TY	REMARKS
2N4–24110–00–X5	FUEL TANK COMP.	2	MXR
3J1–24240–10	.GRAPHIC, FUEL TANK	1	FOR MXR

5. Note that the illustrations for reference in finding parts numbers are not to be used for assembling. When assembling, please use the applicable service manual.

6. The asterisk (*) before a reference number indicates modified items after the first edition.

7. Applicable Serial No.

   Engine Serial No.

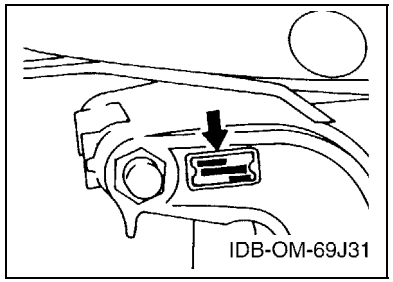

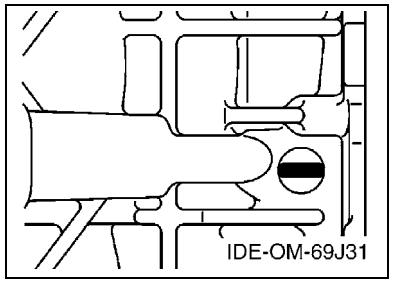

8. Applicable Engine Starting Serial No.

Model	Serial No.	Model	Serial No.
F200A	60L-1001799	FL200A	60M-1000373
F225A	69J-1007259	FL225A	69K-1002513

9. Applicable Colour Code

Abbreviation	Colour Name	Colour Code
DBNM2	DARK BLUISH GRAY METALLIC 2	004D

10. Quantity Column Information

Column No.	Name Of Q'ty Column	Applicable Model
1	69J3	F225AET
2	60L3	F200AET
3	69K3	FL225AET
4	60M3	FL200AET

AVANT–PROPOS

Ce catalogue de pièces détachées concerne les pièces pour le(s) modèle(s) indiqué(s) sur la page de couverture. Lorsque vous commandez des pièces de rechange, veuillez vous référer à ce catalogue de pieces détachées et indiquer clairement les numéros et les noms des pièces détachées.

1. Les modifications ou ajouts ayant été effectués après la parution du catalogue de pièces détachées seront décrits dans les Bulletins d'information concernant les pièces détachées.
   Il est recommandé que vous apportiez les corrections nécessaires au catalogue des pièces détachées en vous référant aux Bulletins d'information.

2. Abréviations
   Dans ce catalogue, les abréviations suivantes sont utilisées:

   "UR" Utiliser le numéro de pièces spécifié.
   "UN" Utiliser autant que nécessaire.
   "AP" Pièces de substitution
   "LM" Fabrication locale (les pièces doivent être commandées localement.)
   "F#" N° de cadre (applicable au N° de série)
   "O/S" Surdimensionné

3. Nombre de pièces d'un assemblage
   - Les pièces fournies comme composants d'un assemblage sont précédées d'un point (.) de la manière indiquée ci–dessous.
   - Le chiffre apparaissant à la droite de chaque composant indique la quantité de pièces pour chaque unité d'assemblage.

N° PIECES	DESCRIPTION	QTE	REMARQUES
2F5–83310–60	ENS. CLIGNOTANT AVANT	2	
115–83311–60	.AMPOULE (6V–18W)	1	

4. Les couleurs concernant les graphiques sont indiquées dans la colonne "REMARQUES", comme indiqué ci–dessous.

N° PIECES	DESCRIPTION	QTE	REMARQUES
2N4–24110–00–X5	RESERVOIR A ESSENCE.	2	MXR
3J1–24240–10	.GRAPHIQUE	1	POUR MXR

5. Veuillez noter que les illustrations sont indiquées à titre de référence pour trouver les numéros de pièces, non pour être utilisées lors de l'assemblage. Lors de l'assemblage, veuillez utiliser le manuel d'entretien adéquat.

6. L'astérisque (*) placé devant un numéro de référence indique des éléments qui ont été modifiés après la première édition.

7. N° de série applicable

   N° de Série du moteur

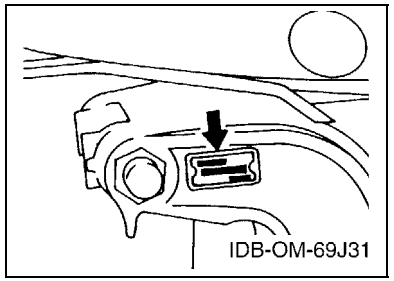

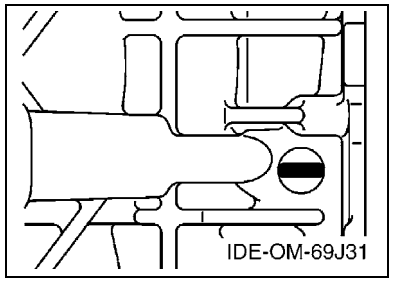

8. N° de série initial du moteur applicable

Modèle	N° de série	Modèle	N° de série
F200A	60L-1001799	FL200A	60M-1000373
F225A	69J-1007259	FL225A	69K-1002513

9. Code couleur applicable

Abréviation	Nom de la couleur	Code couleur
DBNM2	DARK BLUISH GRAY METALLIC 2	004D

10. Informations relatives à la colonne Quantité

N° de la colonne	Nom de la colonne Qté	Modèle applicable
1	69J3	F225AET
2	60L3	F200AET
3	69K3	FL225AET
4	60M3	FL200AET

CONTENTS

SHEET1/2
TOP COWLING A4
CYLINDER & CRANKCASE 1 ..... A6
CRANKSHAFT & PISTON B2
CYLINDER & CRANKCASE 2 ..... B3
CYLINDER & CRANKCASE 3 ..... B5
VALVE B6
INTAKE 1 ..... C2
INTAKE 2 ..... C4
THROTTLE BODY ASSY 1 ..... C5
THROTTLE BODY ASSY 2 ..... C7
THROTTLE BODY ASSY 3 ..... D2
FUEL INJECTION PUMP 1 ..... D4
FUEL INJECTION PUMP 2 ..... D6
FUEL 1 ..... E1
FUEL 2 ..... E3
GENERATOR E4
ELECTRICAL 1 ..... E6
ELECTRICAL 2 ..... F1
ELECTRICAL 3 ..... F3
STARTING MOTOR F4
BOTTOM COWLING 1 ..... F6

INDEX

NUMERICAL INDEX G1

SHEET2/2
BOTTOM COWLING 2 ..... A4*
CONTROL 1 ..... A5*
CONTROL 2 ..... A7*
CONTROL 3 ..... B1*
BRACKET 1 ..... B2*
BRACKET 2 ..... B4*
POWER TRIM & TILT ASSY 1 ..... B6*
POWER TRIM & TILT ASSY 2 ..... C2*
UPPER CASING C3*
OIL PAN C6*
LOWER CASING & DRIVE 1 ..... C7*
LOWER CASING & DRIVE 2 ..... D4*
LOWER CASING & DRIVE 3 ..... D6*
LOWER CASING & DRIVE 4 ..... E3*
STEERING GUIDE E5*
REMOTE CONTROL BOX E6*
METER E7*
SWITCH & PANEL F2*
REPAIR KIT 1 ..... F3*
REPAIR KIT 2 ..... F4*

INDEX

NUMERICAL INDEX G1*

TABLE DES MATIERES

Feuille1/2
CAPOT SUPERIEUR A4
CYLINDRE & CARTER 1 ..... A6
VILEBREQUIN & PISTON B2
CYLINDRE & CARTER 2 ..... B3
CYLINDRE & CARTER 3 ..... B5
SOUPAPE B6
ADMISSION 1 ..... C2
ADMISSION 2 ..... C4
CARTER D'ACCELERATEUR 1 ..... C5
CARTER D'ACCELERATEUR 2 ..... C7
CARTER D'ACCELERATEUR 3 ..... D2
POMPE A INJECTEUR 1 ..... D4
POMPE A INJECTEUR 2 ..... D6
CARBURANT 1 ..... E1
CARBURANT 2 ..... E3
GENERATRICE E4
PARTIE ELECTRIQUE 1 ..... E6
PARTIE ELECTRIQUE 2 ..... F1
PARTIE ELECTRIQUE 3 ..... F3
DEMARREUR ELECTRIQUE F4
CAPOT INFERIEUR 1 ..... F6

INDEX

INDEX NUMERIQUE G1

Feuille2/2
CAPOT INFERIEUR 2 ..... A4*
COMMANDE 1 ..... A5*
COMMANDE 2 ..... A7*
COMMANDE 3 ..... B1*
SUPPORT 1 ..... B2*
SUPPORT 2 ..... B4*
PUISSANCE PARER ET INCLINER 1 ..... B6*
PUISSANCE PARER ET INCLINER 2 ..... C2*
FOURREAU C3*
VENTILATEUR D'HUILE C6*
BOITIER D'HELICE TRANSMISSION 1 ..... C7*
BOITIER D'HELICE TRANSMISSION 2 ..... D4*
BOITIER D'HELICE TRANSMISSION 3 ..... D6*
BOITIER D'HELICE TRANSMISSION 4 ..... E3*
FIXATION DE DIRECTION E5*
BOITIER DE COMMANDE A DISTANCE E6*
COMPTEUR E7*
TABLEAU DE CONTACTEUR F2*
KITS DE REPARATION 1 ..... F3*
KITS DE REPARATION 2 ..... F4*

INDEX

INDEX NUMERIQUE G1*

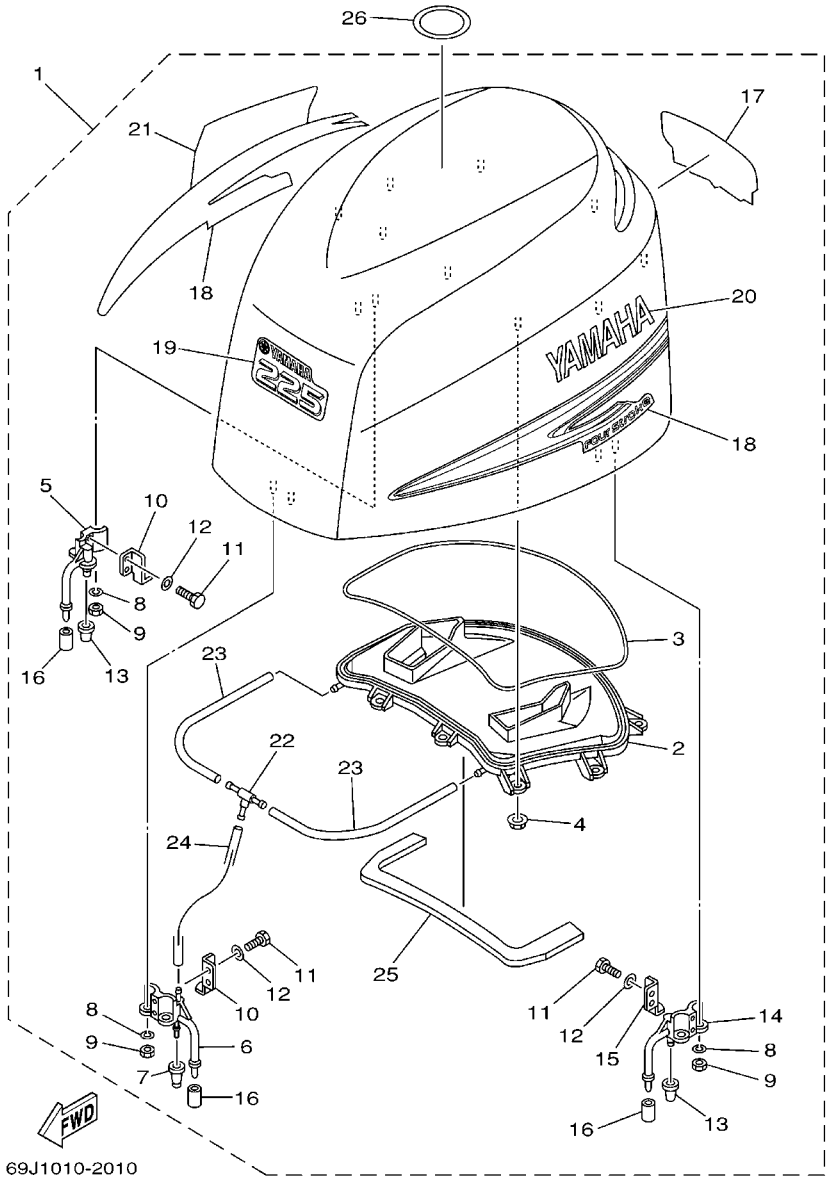

FIG. 1 TOP COWLING — CAPOT SUPERIEUR

REF. NO.	PART NO. N° PIECES	DESCRIPTION DESCRIPTION	69J3	60L3	69K3	60M3		REMARKS REMARQUES
1	69J–42610–00–8D	TOP COWLING ASSY CAPOT (ENS.)	1		1			
	60L–42610–00–8D	TOP COWLING ASSY CAPOT (ENS.)		1		1		
2	69J–42613–00	.MOLDING, AIR DUCT .MANCHON A AIR	1	1	1	1		
3	69J–42629–00	.SEAL .JOINT	1	1	1	1		
4	90179–06M28	.NUT .ECROU	9	9	9	9		
5	68F–42647–01–94	.HOLDER, CLAMP BAND .SUPPORT, SANDOW DE SERRAGE	1	1	1	1		
6	69J–42647–00–94	.HOLDER, CLAMP BAND .SUPPORT, SANDOW DE SERRAGE	1	1	1	1		
7	69J–42663–00	.DAMPER .AMORTISSEUR	1	1	1	1		
8	92990–06100	.WASHER, SPRING .RONDELLE, GROWER	6	6	6	6		
9	95380–06600	.NUT, HEXAGON .ECROU	6	6	6	6		
10	68F–42651–00	.HOOK .CROCHET	2	2	2	2		
11	97095–06016	.BOLT .BOULON	6	6	6	6		
12	92995–06600	.WASHER .RONDELLE	6	6	6	6		
13	68F–42663–00	.DAMPER .AMORTISSEUR	2	2	2	2		
14	68F–42648–01–94	.HOLDER, CLAMP BAND .SUPPORT, SANDOW DE SERRAGE	1	1	1	1		
15	67F–42652–00	.HOOK .CROCHET	1	1	1	1		
16	67F–13448–00	.CAP .CAPUCHON	3	3	3	3		
17	69J–42678–00	.GRAPHIC, REAR .ADHESIF, ARRIERE	1		1			
	60L–42678–00	.GRAPHIC, REAR .ADHESIF, ARRIERE		1		1		
18	69J–W0070–00	.GRAPHIC SET .JEU DIEMBLEMES	1	1	1	1		
19	69J–42677–00	.GRAPHIC, FRONT .ADHESIF, AVANT	1		1			
	60L–42677–00	.GRAPHIC, FRONT .ADHESIF, AVANT		1		1		
20	69J–42681–00	.MARK, COWLING .ADHESIF, CAPOT	1	1	1	1		
21	69J–42682–00	.MARK, COWLING .ADHESIF, CAPOT	1	1	1	1		
22	69J–24378–00	.PIPE, JOINT 4 .DURITE RACCORDEMENT 4	1	1	1	1		
23	90445–11020	.HOSE (L400) .DURITE (L400)	2	2	2	2		
24	90445–11021	.HOSE .DURITE	1	1	1	1		

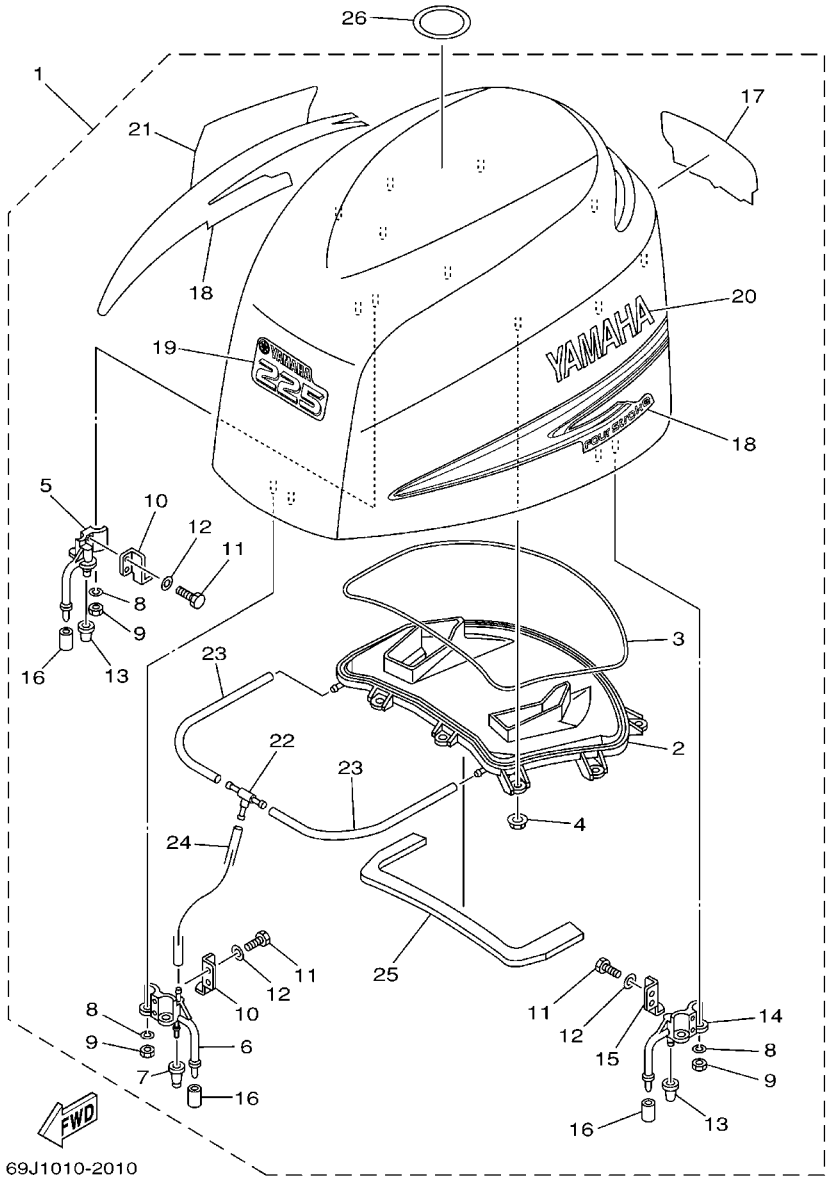

FIG. 1 TOP COWLING — CAPOT SUPERIEUR

REF. NO.	PART NO. N° PIECES	DESCRIPTION DESCRIPTION	69J3	60L3	69K3	60M3		REMARKS REMARQUES
25	69J–42617–00	.DAMPER, FORM .BOURRELET, CAOUTCHOUC	1	1	1	1		
26	67F–13434–02	LABEL, CAUTION ETIQUETTE, ATTENTION	1	1	1	1		

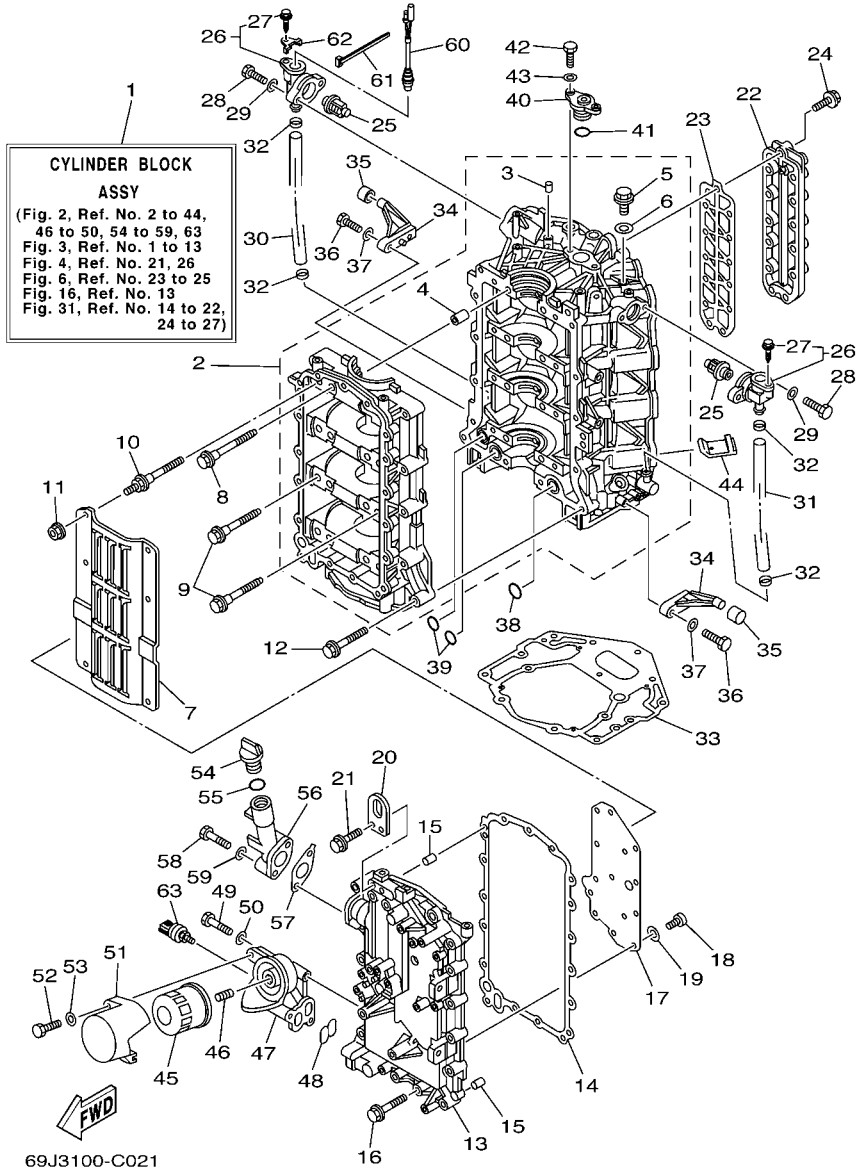

FIG. 2 CYLINDER & CRANKCASE 1 CYLINDRE & CARTER 1

REF. NO.	PART NO. N° PIECES	DESCRIPTION DESCRIPTION	69J3	60L3	69K3	60M3		REMARKS REMARQUES
1	69J–W009B–02–1S	CYLINDER BLOCK ASSY CYLINDRE GROUPE (ENS.)	1	1	1	1		
2	69J–15100–10–1S	CRANKCASE ASSY CARTER DE MOTEUR COMPLET	1	1	1	1		
3	93606–12019	.PIN, DOWEL .GOUPILLE	1	1	1	1		
4	91814–18001	.PIN, DOWEL .GOUJON, D'ASSEMBLAGE	8	8	8	8		
5	90340–14M06	.PLUG, STRAIGHT SCREW .PLOT, FILETE DROIT	1	1	1	1		
6	90430–14115	.GASKET .JOINT	1	1	1	1		
7	69J–15123–00	PLATE, BUFFLE 1 PLAQUE DE BUTOIR	1	1	1	1		
8	69J–15187–00	BOLT BOULON	8	8	8	8		
9	69J–15481–00	BOLT 1 BOULON 1	2	2	2	2		
10	69J–15482–00	BOLT 2 BOULON 2	6	6	6	6		
11	95707–06500	NUT, FLANGE ECROU, A COLLERETTE	6	6	6	6		
12	90119–08M66	BOLT, WITH WASHER BOULON, AVEC RONDELLE	13	13	13	13		
13	69J–15411–00–94	COVER, CRANKCASE 1 COUVERCLE 1, CARTER MOTEUR	1	1	1	1		
14	69J–15451–00	GASKET, CRANKCASE COVER 1 JOINT, COUVERCLE DE CARTER 1	1	1	1	1		
15	93606–12019	PIN, DOWEL GOUPILLE	2	2	2	2		
16	90119–08009	BOLT, WITH WASHER BOULON, AVEC RONDELLE	17	17	17	17		
17	69J–11168–00	COVER, BREATHER COUVERCLE, RENIFLARD	1	1	1	1		
18	98507–04008	SCREW, PAN HEAD VIS, TETE TRONCONIQUE	14	14	14	14		
19	92907–04600	WASHER RONDELLE	14	14	14	14		
20	69J–11119–00	HANGER, ENGINE ANNEAU, LEVAGE	1	1	1	1		
21	90119–06MA2	BOLT, WITH WASHER BOULON, AVEC RONDELLE	2	2	2	2		
22	69J–1131C–00–1S	COVER, JOINT COUVERCLE, RACCORDEMENT	1	1	1	1		
23	69J–1131B–00	GASKET, COVER JOINT, COUVERCLE	1	1	1	1		
24	90119–06MA4	BOLT, WITH WASHER BOULON, AVEC RONDELLE	13	13	13	13		
25	67F–12411–00	THERMOSTAT THERMOSTAT	2	2	2	2		
26	69J–1240H–00–1S	COVER ASSEMBLY BOITIER DISTRIBUTEUR COMPLET	2	2	2	2		
27	90109–06M86	.BOLT .BOULON	1	1	1	1		

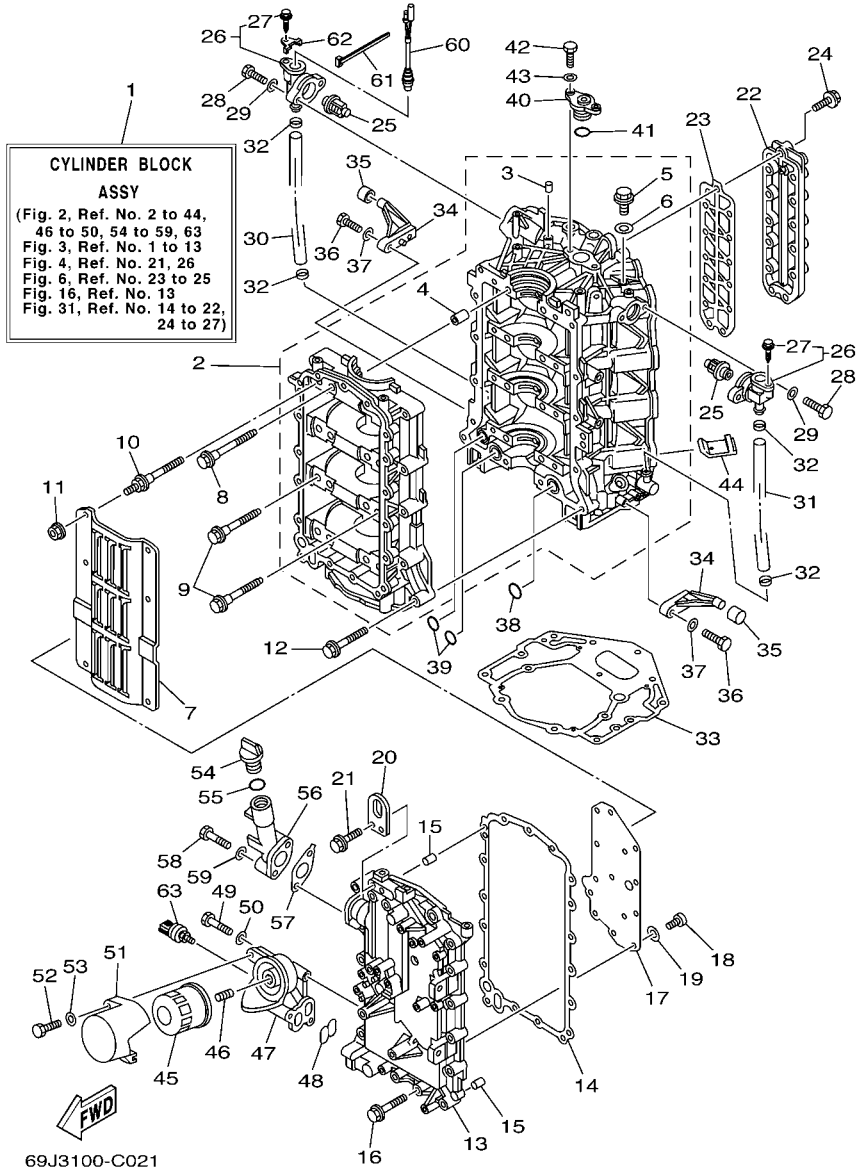

FIG. 2 CYLINDER & CRANKCASE 1 CYLINDRE & CARTER 1

REF. NO.	PART NO. N° PIECES	DESCRIPTION DESCRIPTION	69J3	60L3	69K3	60M3		REMARKS REMARQUES
28	97095–06025	BOLT BOULON	4	4	4	4		
29	92995–06600	WASHER RONDELLE	4	4	4	4		
30	69J–1243A–00	HOSE 1 DURITE 1	1	1	1	1		
31	69J–1243E–00	HOSE 2 DURITE 2	1	1	1	1		
32	90465–11M10	CLAMP BRIDE	4	4	4	4		
33	69J–11351–10	GASKET, CYLINDER JOINT, D'EMBASE	1	1	1	1		
34	67F–42761–00–94	STOPPER PLAQUETTE	2	2	2	2		
35	68F–44533–00	DAMPER, UPPER MOUNT RUBBER COUVERCLE, SUSPENSION INFERIEU	2	2	2	2		
36	97095–06025	BOLT BOULON	4	4	4	4		
37	92995–06600	WASHER RONDELLE	4	4	4	4		
38	93210–25552	O-RING JOINT TORIQUE	1	1	1	1		
39	93210–19MJ1	O-RING JOINT TORIQUE	2	2	2	2		
40	69J–11313–00–94	PLUG, BLIND PLOT, BORGNE	1	1	1	1		
41	93210–25647	O-RING JOINT TORIQUE	1	1	1	1		
42	97095–06020	BOLT BOULON	2	2	2	2		
43	92995–06600	WASHER RONDELLE	2	2	2	2		
44	69J–14664–00	GROMMET, WATER SHUT PASSE-FIL	2	2	2	2		
45	69J–13440–00	ELEMENT ASSY, OIL CLEANER ELEMENT, FILTRE A HUILE	1	1	1	1		
46	69J–12858–00	BOLT, UNION BOULON, RACCORD	1	1	1	1		
47	69J–13446–00–94	CONNECTOR CONNECTEUR	1	1	1	1		
48	69J–13477–00	GASKET JOINT	1	1	1	1		
49	97095–06045	BOLT BOULON	3	3	3	3		
50	92995–06600	WASHER RONDELLE	3	3	3	3		
51	69J–13447–00	COVER, OIL ELEMENT COUVERCLE, ELEMENT A HUILE	1	1	1	1		
52	97095–06040	BOLT BOULON	1	1	1	1		
53	92995–06600	WASHER RONDELLE	1	1	1	1		
54	6G8–15363–00	PLUG, OIL PLOT, HUILE	1	1	1	1		

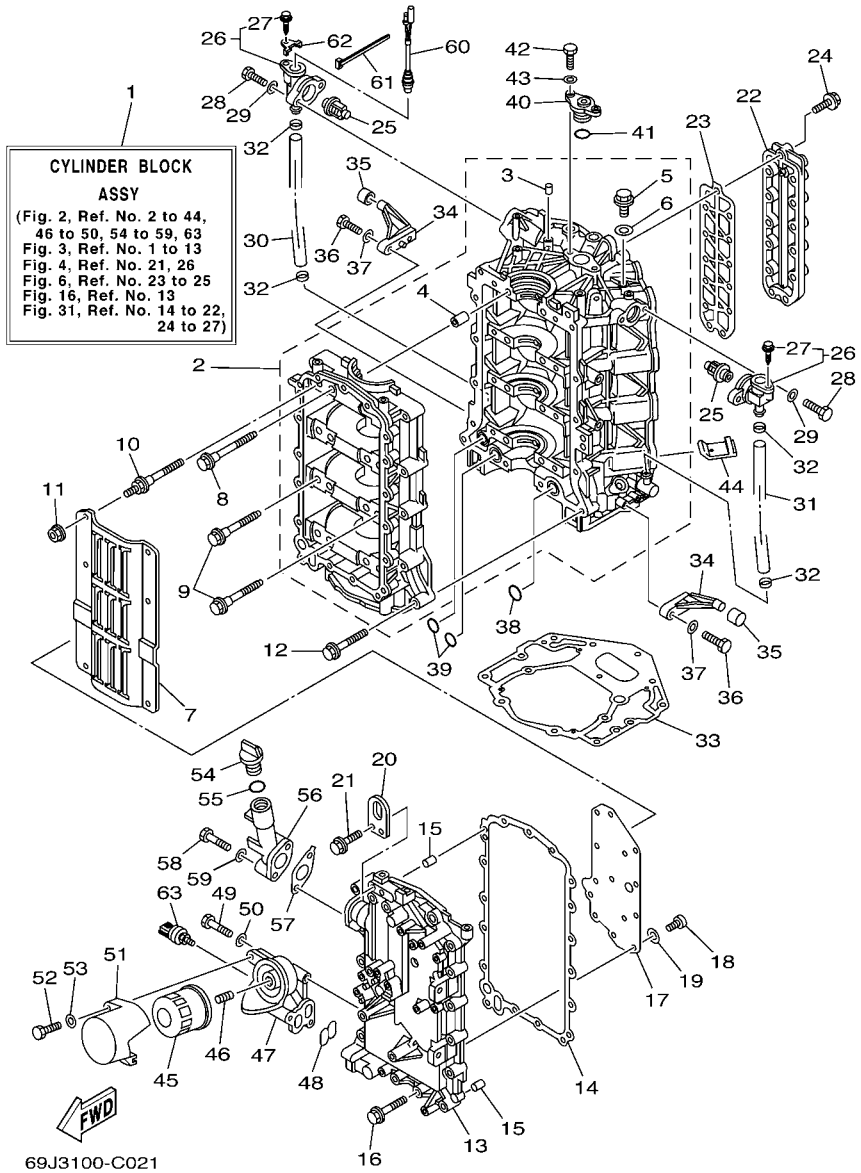

FIG. 2 CYLINDER & CRANKCASE 1 CYLINDRE & CARTER 1

REF. NO.	PART NO. N° PIECES	DESCRIPTION DESCRIPTION	69J3	60L3	69K3	60M3		REMARKS REMARQUES
55	93210–24M79	O-RING JOINT TORIQUE	1	1	1	1		
56	69J–15319–00–1S	JOINT JOINT	1	1	1	1		
57	69J–15364–A0	GASKET, OIL PLUG JOINT, PLOT D'HUILE	1	1	1	1		
58	97095–06045	BOLT BOULON	2	2	2	2		
59	92995–06600	WASHER RONDELLE	2	2	2	2		
60	69J–82560–00	THERMO SWITCH ASSY THERMO-CONTACT COMPLET	2	2	2	2		
61	90465–11M10	CLAMP BRIDE	2	2	2	2		
62	6E9–82588–00	PLATE PLAQUE	2	2	2	2		
63	69J–83651–00	SENDER, OIL PRESSURE RACCORD, PRESSION D'HUILE	1	1	1	1		

FIG. 3 CRANKSHAFT & PISTON VILEBREQUIN & PISTON

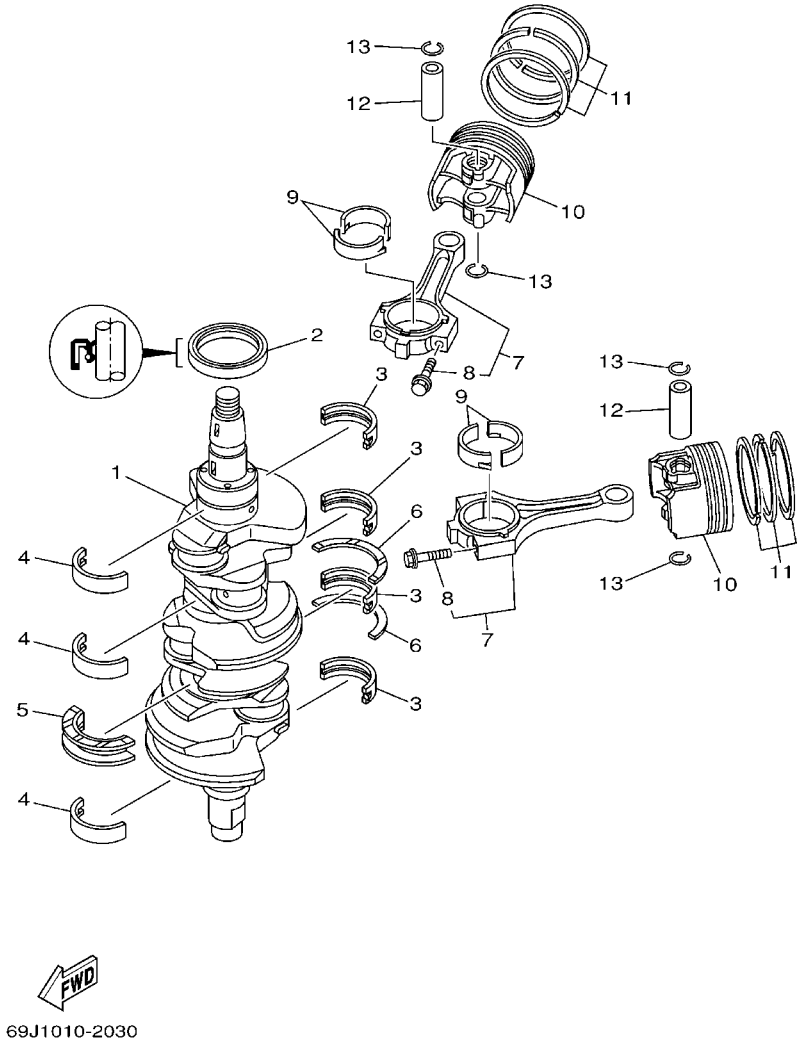

REF. NO.	PART NO. N° PIECES	DESCRIPTION DESCRIPTION	69J3	60L3	69K3	60M3		REMARKS REMARQUES
1	69J–11411–00	CRANKSHAFT VILEBREQUIN COMPLET	1	1	1	1		
2	93102–63004	OIL SEAL JOINT SPY	1	1	1	1		
3	69J–11416–00	PLANE BEARING, CRANKSHAFT 1 COUSSINET DE VILEBREQUIN 1	4	4	4	4		UR #1 UR #1
	69J–11416–10	PLANE BEARING, CRANKSHAFT 1 COUSSINET DE VILEBREQUIN 1	4	4	4	4		UR #2 UR #2
	69J–11416–20	PLANE BEARING, CRANKSHAFT 1 COUSSINET DE VILEBREQUIN 1	4	4	4	4		UR #3 UR #3
4	69J–11417–00	PLANE BEARING, CRANKSHAFT 2 COUSSINET DE VILEBREQUIN 2	3	3	3	3		UR #1 UR #1
	69J–11417–10	PLANE BEARING, CRANKSHAFT 2 COUSSINET DE VILEBREQUIN 2	3	3	3	3		UR #2 UR #2
	69J–11417–20	PLANE BEARING, CRANKSHAFT 2 COUSSINET DE VILEBREQUIN 2	3	3	3	3		UR #3 UR #3
5	69J–11426–00	PLANE BEARING, CRANKSHAFT 1 COUSSINET, VILEBREQUIN 1	1	1	1	1		UR #1 UR #1
	69J–11426–10	PLANE BEARING, CRANKSHAFT 1 COUSSINET, VILEBREQUIN 1	1	1	1	1		UR #2 UR #2
	69J–11426–20	PLANE BEARING, CRANKSHAFT 1 COUSSINET, VILEBREQUIN 1	1	1	1	1		UR #3 UR #3
6	69J–11427–00	PLANE BEARING, CRANKSHAFT 2 COUSSINET, VILEBREQUIN 2	2	2	2	2		
7	69J–W1165–00	CONNECTING ROD ASSY BIELLE COMPLETTE	6	6	6	6		
8	69J–11654–00	.BOLT, CONNECTING ROD .BOULON, BIELLE	2	2	2	2		
9	69J–11656–00	PLANE BEARING, CONNECTING ROD ROULEMENT DE BIELLE	12	12	12	12		UR YELLOW UR YELLOW
	69J–11656–10	PLANE BEARING, CONNECTING ROD ROULEMENT DE BIELLE	12	12	12	12		UR GREEN UR GREEN
	69J–11656–20	PLANE BEARING, CONNECTING ROD ROULEMENT DE BIELLE	12	12	12	12		UR BLUE UR BLUE
10	69J–11631–00–B0	PISTON (STD) PISTON (STD)	6	6	6	6		
11	69J–11603–00	PISTON RING SET (STD) JEU DE SEGMENTS (STD)	6	6	6	6		
12	69J–11633–00	PIN, PISTON AXE, PISTON	6	6	6	6		
13	69J–11634–00	CLIP, PISTON PIN AGRAFE, AXE DE PISTON	12	12	12	12		

FIG. 4 CYLINDER & CRANKCASE 2 CYLINDRE & CARTER 2

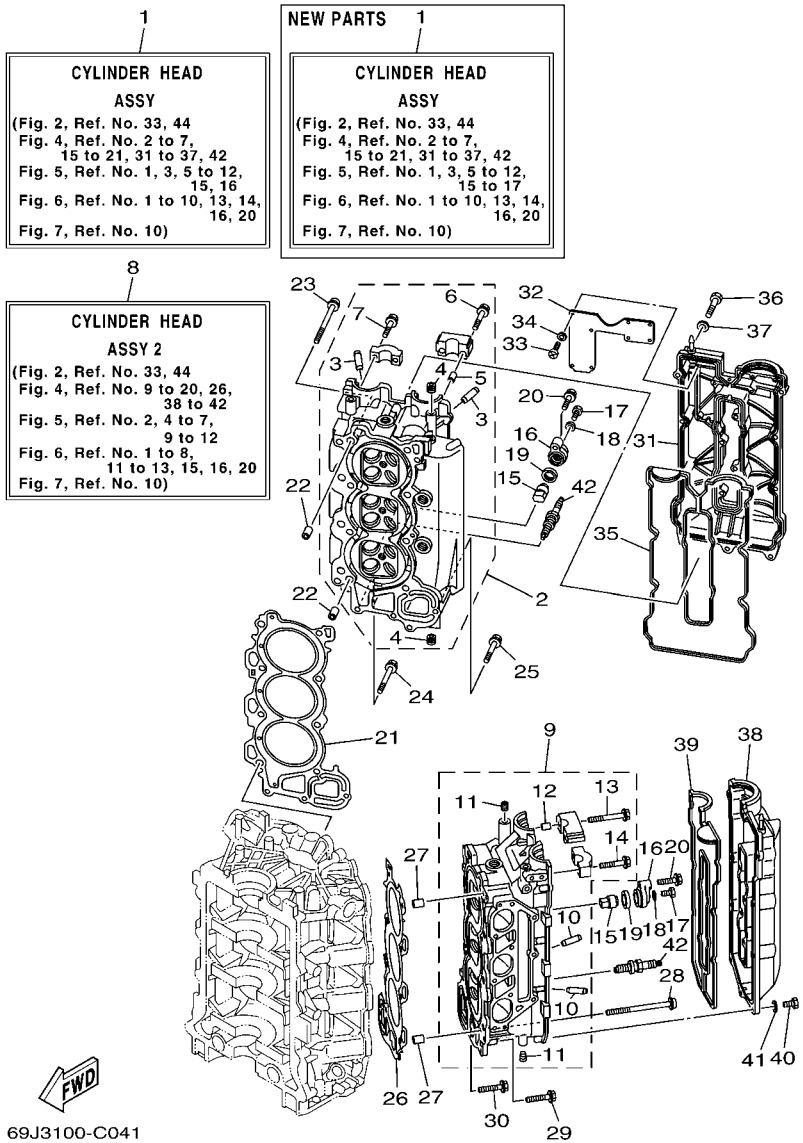

1: NEW PARTS
STARTING SERIAL NO. : 60L-1002933 ~ , 60M- 1000604 ~
69J-1010791 ~ , 69K- 1003796 ~

REF. NO.	PART NO. N° PIECES	DESCRIPTION DESCRIPTION	69J3	60L3	69K3	60M3		REMARKS REMARQUES
1	69J–W009A–02–1S	CYLINDER HEAD ASSY CULASSE (ENS.)	1	1	1	1		
	69J–W009A–03–1S	CYLINDER HEAD ASSY CULASSE (ENS.)	1	1	1	1		NEW PARTS *1 NEW PARTS *1
2	69J–11110–01–94	CYLINDER HEAD ASSY JEU DE CULASSE	1	1	1	1		
3	69J–11133–10	.GUIDE, VALVE 1 .GUIDE, SOUPAPE 1	12	12	12	12		
4	90344–51019	.PLUG, TAPER SCREW .PLOT, FILETE CONIQUE	5	5	5	5		
5	91809–08006	.SLEEVE GUIDE-DOWEL .GOUJON, D'ASSEMBLAGE	2	2	2	2		
6	90119–07235	.BOLT/WASHER-CAM CAPS .BOULON, AVEC RONDELLE	2	2	2	2		
7	90119–07234	.BOLT, WITH WASHER .BOULON, AVEC RONDELLE	18	18	18	18		
8	69J–W009C–02–1S	CYLINDER HEAD ASSY 2 CULASSE 2	1	1	1	1		
9	69J–11120–01–94	CYLINDER HEAD ASSY 2 CULASSE 2	1	1	1	1		
10	69J–11133–10	.GUIDE, VALVE 1 .GUIDE, SOUPAPE 1	12	12	12	12		
11	90344–51019	.PLUG, TAPER SCREW .PLOT, FILETE CONIQUE	5	5	5	5		
12	91809–08006	.SLEEVE GUIDE-DOWEL .GOUJON, D'ASSEMBLAGE	2	2	2	2		
13	90119–07235	.BOLT/WASHER-CAM CAPS .BOULON, AVEC RONDELLE	2	2	2	2		
14	90119–07234	.BOLT, WITH WASHER .BOULON, AVEC RONDELLE	14	14	14	14		
15	68V–11325–00	ANODE ANODE	4	4	4	4		
16	69J–11327–00–94	COVER, ANODE COUVERCLE	4	4	4	4		
17	97075–06020	BOLT BOULON	4	4	4	4		
18	92995–06600	WASHER RONDELLE	4	4	4	4		
19	67F–11328–00	GROMMET, ANODE PASSE-FIL	4	4	4	4		
20	97575–08540	BOLT, WITH WASHER VIS HEXAGONAL AVC RONDELLE	4	4	4	4		
21	69J–11181–02	GASKET, CYLINDER HEAD 1 JOINT, DE CULASSE 1	1	1	1	1		
22	90387–10M08	COLLAR COLLERETTE	2	2	2	2		
23	90155–10001	SCREW, FLAT FILLISTER VIS, TETE OVALE PLATE	8	8	8	8		
24	90119–08M91	BOLT, WITH WASHER BOULON, AVEC RONDELLE	2	2	2	2		
25	90119–08021	BOLT, WITH WASHER BOULON, AVEC RONDELLE	1	1	1	1		
26	69J–11182–02	GASKET, CYLINDER HEAD 2 JOINT, CULASSE 2	1	1	1	1		

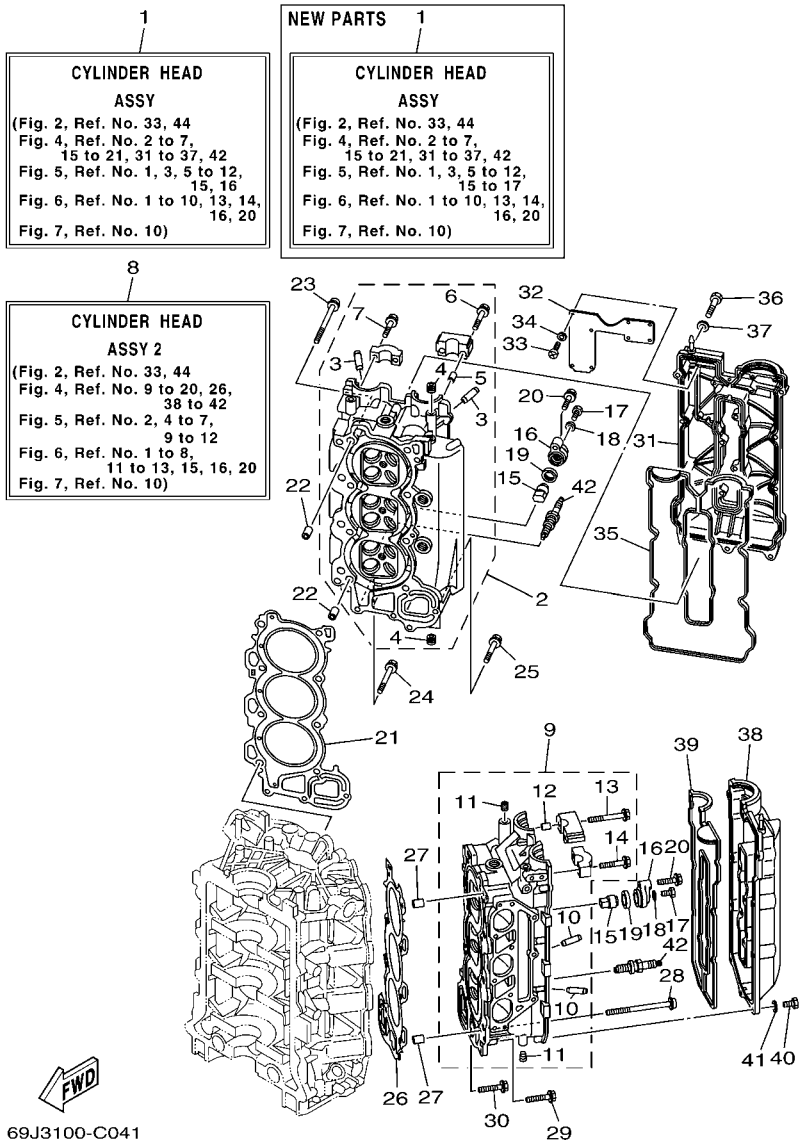

1: NEW PARTS
STARTING SERIAL NO. : 60L-1002933 ~ , 60M- 1000604 ~
69J-1010791 ~ , 69K- 1003796 ~

FIG. 4 CYLINDER & CRANKCASE 2 CYLINDRE & CARTER 2

REF. NO.	PART NO. N° PIECES	DESCRIPTION DESCRIPTION	69J3	60L3	69K3	60M3		REMARKS REMARQUES
27	90387–10M08	COLLAR COLLERETTE	2	2	2	2		
28	90155–10001	SCREW, FLAT FILLISTER VIS, TETE OVALE PLATE	8	8	8	8		
29	90119–08M91	BOLT, WITH WASHER BOULON, AVEC RONDELLE	2	2	2	2		
30	90119–08021	BOLT, WITH WASHER BOULON, AVEC RONDELLE	1	1	1	1		
31	69J–11191–00–1S	COVER, CYLINDER HEAD 1 COUVERCLE, CULASSE 1	1	1	1	1		
32	69J–11135–00	PLATE, BREATHER 3 PLAQUE, RENIFLARD 3	1	1	1	1		
33	98507–04008	SCREW, PAN HEAD VIS, TETE TRONCONIQUE	8	8	8	8		
34	92907–04600	WASHER RONDELLE	8	8	8	8		
35	69J–11193–00	GASKET, HEAD COVER 1 JOINT, COUVERCLE DE CULASSE 1	1	1	1	1		
36	97095–06030	BOLT BOULON	14	14	14	14		
37	92995–06600	WASHER RONDELLE	14	14	14	14		
38	69J–11192–00–1S	COVER, CYLINDER HEAD 2 COUVERCLE, CULASSE 2	1	1	1	1		
39	69J–11194–00	GASKET, HEAD COVER 2 JOINT, COUVERCLE DE CULASSE 2	1	1	1	1		
40	97095–06030	BOLT BOULON	14	14	14	14		
41	92995–06600	WASHER RONDELLE	14	14	14	14		
42	94702–00391	PLUG, SPARK (NGK LFR5A-11) BOUGIE D'ALLUMAGE(NGK LFR5A-11)	6	6	6	6		

FIG. 5 CYLINDER & CRANKCASE 3 CYLINDRE & CARTER 3

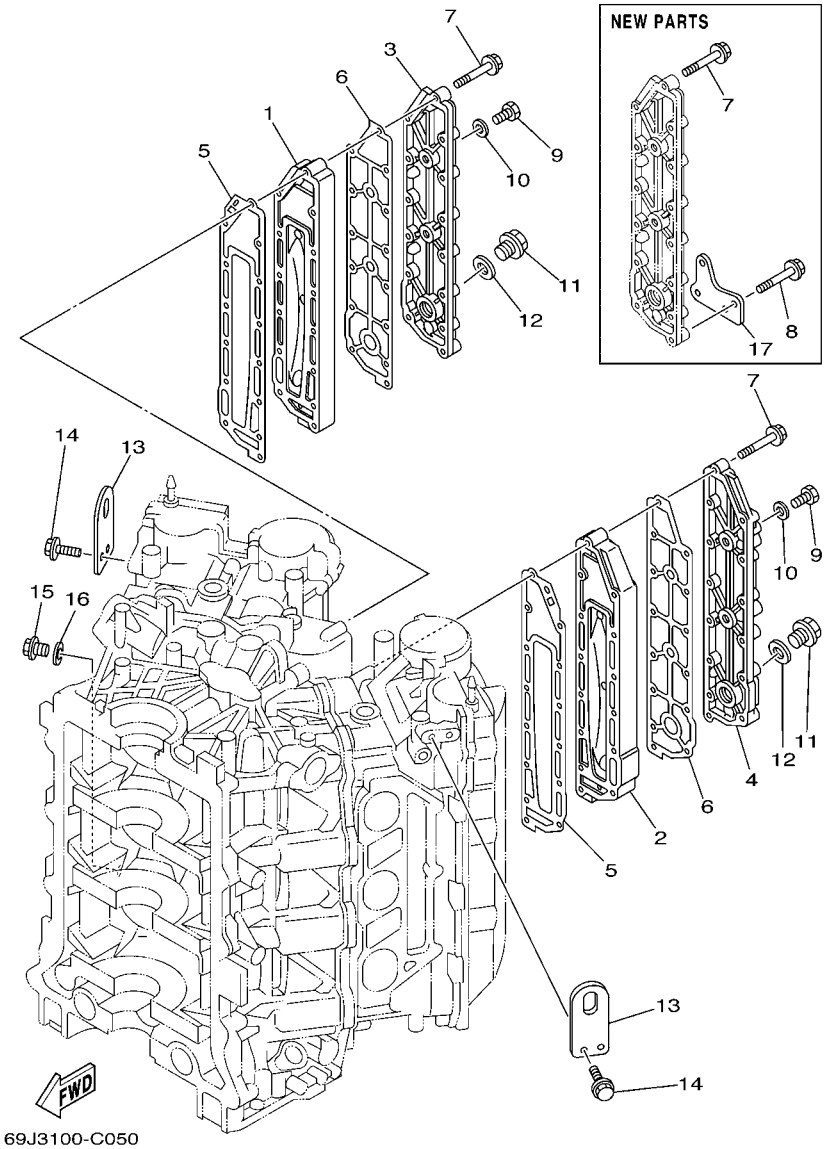

1: NEW PARTS
STARTING SERIAL NO. : 60L-1002933 ~ , 60M- 1000604 ~
69J-1010791 ~ , 69K- 1003796 ~

REF. NO.	PART NO. N° PIECES	DESCRIPTION DESCRIPTION	69J3	60L3	69K3	60M3		REMARKS REMARQUES
1	69J–41111–00–1S	INNER COVER, EXHAUST PLAQUE, ECHAPPEMENT	1	1	1	1		
2	69J–41121–00–1S	INNER COVER,EXHAUST PLAQUE, ECHAPPEMENT	1	1	1	1		
3	69J–41113–00–1S	OUTER COVER, EXHAUST COUVERCLE, ECHAPPEMENT	1	1	1	1		
4	69J–41123–00–1S	OUTER COVER, EXHAUST COUVERCLE, ECHAPPEMENT	1	1	1	1		
5	69J–41112–00	GASKET, EXHAUST INNER COVER JOINT, PLAQUE D'ECHAPPEMENT	2	2	2	2		
6	69J–41114–00	GASKET, EXHAUST OUTER COVER JOINT, COUVERCLE D'ECHAPPEMENT	2	2	2	2		
7	90119–06027	BOLT, WITH WASHER BOULON, AVEC RONDELLE	28	28	28	28		
	90119–06027	BOLT, WITH WASHER BOULON, AVEC RONDELLE	26	26	26	26		NEW PARTS *1 NEW PARTS *1
8	90119–06055	BOLT, WITH WASHER BOULON, AVEC RONDELLE	2	2	2	2		NEW PARTS *1 NEW PARTS *1
9	97095–08014	BOLT BOULON	4	4	4	4		
10	90430–08143	GASKET JOINT	4	4	4	4		
11	90340–18M09	PLUG, STRAIGHT SCREW PLOT, FILETE DROIT	2	2	2	2		
12	90430–18130	GASKET JOINT	2	2	2	2		
13	69J–1111E–00	HANGER, ENGINE 2 ANNEAU, LEVAGE 2	2	2	2	2		
14	90119–06MA2	BOLT, WITH WASHER BOULON, AVEC RONDELLE	4	4	4	4		
15	90340–14M06	PLUG, STRAIGHT SCREW PLOT, FILETE DROIT	1	1	1	1		
16	90430–14115	GASKET JOINT	1	1	1	1		
17	69J–2134V–00	BRACKET SUPPORT	1	1	1	1		NEW PARTS *1 NEW PARTS *1

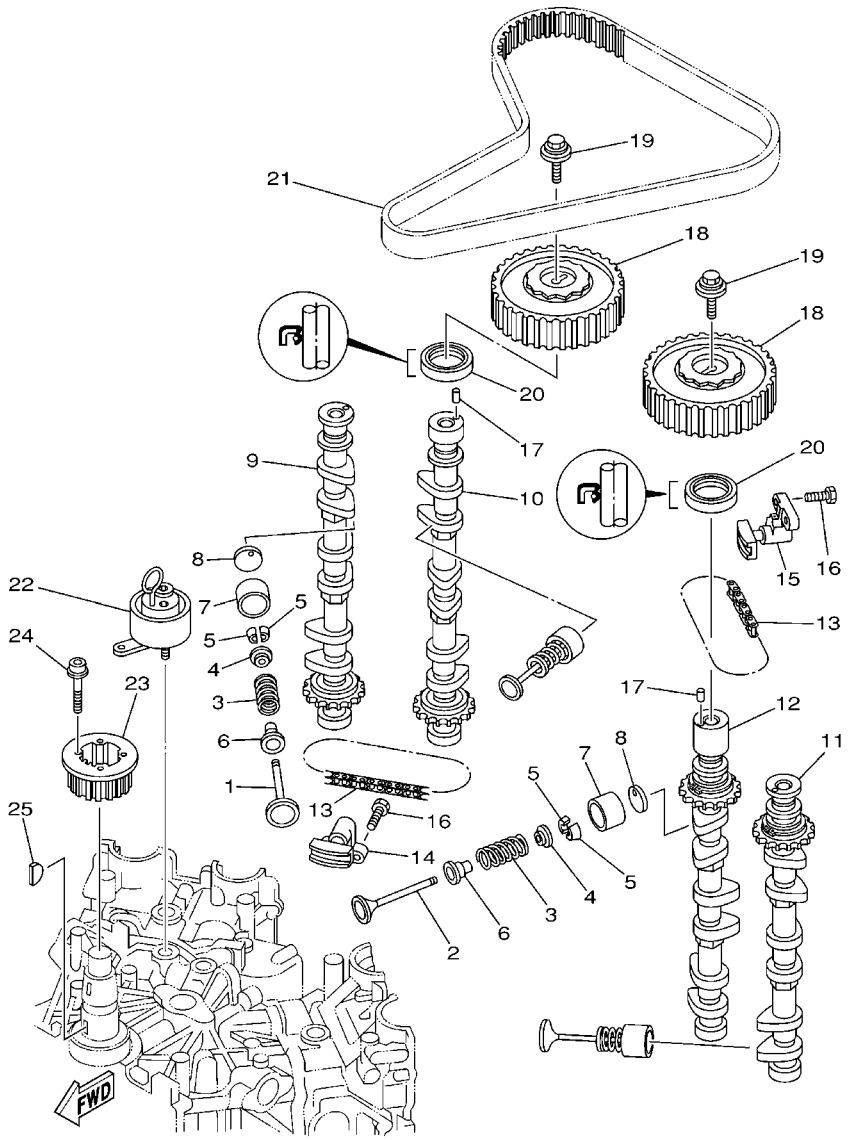

69J1010-2060

FIG. 6 VALVE — SOUPAPE

REF. NO.	PART NO. N° PIECES	DESCRIPTION DESCRIPTION	69J3	60L3	69K3	60M3		REMARKS REMARQUES
1	69J–12111–00	VALVE, INTAKE SOUPAPE, ADMISSION	12	12	12	12		
2	69J–12121–00	VALVE, EXHAUST SOUPAPE, ECHAPPEMENT	12	12	12	12		
3	69J–12113–00	SPRING, VALVE INNER RESSORT DE SOUPAPE, INTERNE	24	24	24	24		
4	69J–12117–00	RETAINER, VALVE SPRING BUTEE DE RESSORT DE SOUPAPE	24	24	24	24		
5	69J–12118–00	COTTER, VALVE FRAISE, SOUPAPE	48	48	48	48		
6	69J–12119–00	SEAL, VALVE STEM JOINT, QUEUE DE SOUPAPE	24	24	24	24		
7	69J–12153–00	LIFTER, VALVE LEVE-SOUPAPE	24	24	24	24		
8	69J–12168–00	PAD, ADJUSTING (2.320) PASTILLE, DE REGLAGE (2.320)	24	24	24	24		UR UR
	69J–12168–10	PAD, ADJUSTING (2.340) PASTILLE, DE REGLAGE (2.340)	24	24	24	24		UR UR
	69J–12168–20	PAD, ADJUSTING (2.360) PASTILLE, DE REGLAGE (2.360)	24	24	24	24		UR UR
	69J–12168–30	PAD, ADJUSTING (2.380) PASTILLE, DE REGLAGE (2.380)	24	24	24	24		UR UR
	69J–12168–40	PAD, ADJUSTING (2.400) PASTILLE, DE REGLAGE (2.400)	24	24	24	24		UR UR
	69J–12168–50	PAD, ADJUSTING (2.420) PASTILLE, DE REGLAGE (2.420)	24	24	24	24		UR UR
	69J–12168–60	PAD, ADJUSTING (2.440) PASTILLE, DE REGLAGE (2.440)	24	24	24	24		UR UR
	69J–12168–70	PAD, ADJUSTING (2.460) PASTILLE, DE REGLAGE (2.460)	24	24	24	24		UR UR
	69J–12168–80	PAD, ADJUSTING (2.480) PASTILLE, DE REGLAGE (2.480)	24	24	24	24		UR UR
	69J–12168–90	PAD, ADJUSTING (2.500) PASTILLE, DE REGLAGE (2.500)	24	24	24	24		UR UR
	69J–12168–A0	PAD, ADJUSTING (2.520) PASTILLE, DE REGLAGE (2.520)	24	24	24	24		UR UR
	69J–12168–B0	PAD, ADJUSTING (2.540) PASTILLE, DE REGLAGE (2.540)	24	24	24	24		UR UR
	69J–12168–C0	PAD, ADJUSTING (2.560) PASTILLE, DE REGLAGE (2.560)	24	24	24	24		UR UR
	69J–12168–D0	PAD, ADJUSTING (2.580) PASTILLE, DE REGLAGE (2.580)	24	24	24	24		UR UR
	69J–12168–E0	PAD, ADJUSTING (2.600) PASTILLE, DE REGLAGE (2.600)	24	24	24	24		UR UR
	69J–12168–F0	PAD, ADJUSTING (2.620) PASTILLE, DE REGLAGE (2.620)	24	24	24	24		UR UR
	69J–12168–G0	PAD, ADJUSTING (2.640) PASTILLE, DE REGLAGE (2.640)	24	24	24	24		UR UR
	69J–12168–H0	PAD, ADJUSTING (2.660) PASTILLE, DE REGLAGE (2.660)	24	24	24	24		UR UR
	69J–12168–J0	PAD, ADJUSTING (2.680) PASTILLE, DE REGLAGE (2.680)	24	24	24	24		UR UR
	69J–12168–K0	PAD, ADJUSTING (2.700) PASTILLE, DE REGLAGE (2.700)	24	24	24	24		UR UR

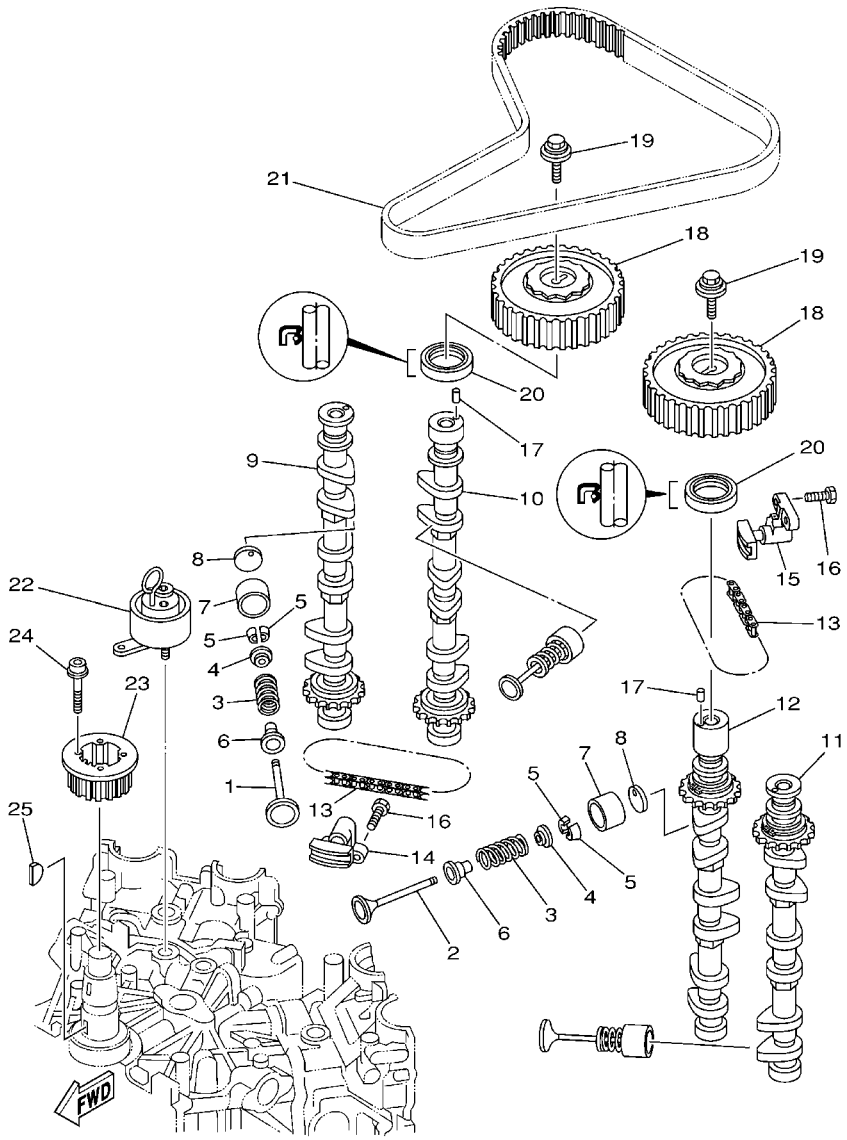

69J1010-2060

FIG. 6 VALVE — SOUPAPE

REF. NO.	PART NO. N° PIECES	DESCRIPTION DESCRIPTION	69J3	60L3	69K3	60M3		REMARKS REMARQUES
8	69J–12168–L0	PAD, ADJUSTING (2.720) PASTILLE, DE REGLAGE (2.720)	24	24	24	24		UR UR
	69J–12168–M0	PAD, ADJUSTING (2.740) PASTILLE, DE REGLAGE (2.740)	24	24	24	24		UR UR
	69J–12168–N0	PAD, ADJUSTING (2.760) PASTILLE, DE REGLAGE (2.760)	24	24	24	24		UR UR
	69J–12168–P0	PAD, ADJUSTING (2.780) PASTILLE, DE REGLAGE (2.780)	24	24	24	24		UR UR
	69J–12168–R0	PAD, ADJUSTING (2.800) PASTILLE, DE REGLAGE (2.800)	24	24	24	24		UR UR
	69J–12168–S0	PAD, ADJUSTING (2.820) PASTILLE, DE REGLAGE (2.820)	24	24	24	24		UR UR
	69J–12168–T0	PAD, ADJUSTING (2.840) PASTILLE, DE REGLAGE (2.840)	24	24	24	24		UR UR
	69J–12168–U0	PAD, ADJUSTING (2.860) PASTILLE, DE REGLAGE (2.860)	24	24	24	24		UR UR
	69J–12168–V0	PAD, ADJUSTING (2.880) PASTILLE, DE REGLAGE (2.880)	24	24	24	24		UR UR
	69J–12168–W0	PAD, ADJUSTING (2.900) PASTILLE, DE REGLAGE (2.900)	24	24	24	24		UR UR
	69J–12168–X0	PAD, ADJUSTING (2.920) PASTILLE, DE REGLAGE (2.920)	24	24	24	24		UR UR
	69J–12168–Y0	PAD, ADJUSTING (2.940) PASTILLE, DE REGLAGE (2.940)	24	24	24	24		UR UR
	69J–12169–00	PAD, ADJUSTING (2.960) PASTILLE, DE REGLAGE (2.960)	24	24	24	24		UR UR
9	69J–12171–00	CAMSHAFT 1 ARBRE A CAMES 1	1	1	1	1		
10	69J–12181–00	CAMSHAFT 2 ARBRE A CAMES 2	1	1	1	1		
11	69J–12172–00	CAMSHAFT 3 ARBRE A CAMES 3	1	1	1	1		
12	69J–12182–00	CAMSHAFT 4 ARBRE A CAMES 4	1	1	1	1		
13	94581–99044	CHAIN CHAINE	2	2	2	2		
14	69J–12210–00	TENSIONER ASSY, CAM CHAIN TENDEUR DE CHAINE DISTRIBUTION	1	1	1	1		
15	69J–12230–00	TENSIONER ASSY, CAM CHAIN 2 TENDEUR DE CHAINE DISTRIBUTION	1	1	1	1		
16	97013–06025	BOLT BOULON	4	4	4	4		
17	93605–10108	PIN, DOWEL AXE	2	2	2	2		
18	69J–11537–00	GEAR, DRIVEN PIGNON SECONDAIRE	2	2	2	2		
19	90119–10M06	BOLT, WITH WASHER BOULON, AVEC RONDELLE	2	2	2	2		
20	93102–38M59	OIL SEAL JOINT SPY	2	2	2	2		
21	69J–46241–00	V-BELT COURROIE TRAPEZOIDALE	1	1	1	1		
22	69J–11590–00	TENSIONER ASSY TENDEUR (ENS.)	1	1	1	1		

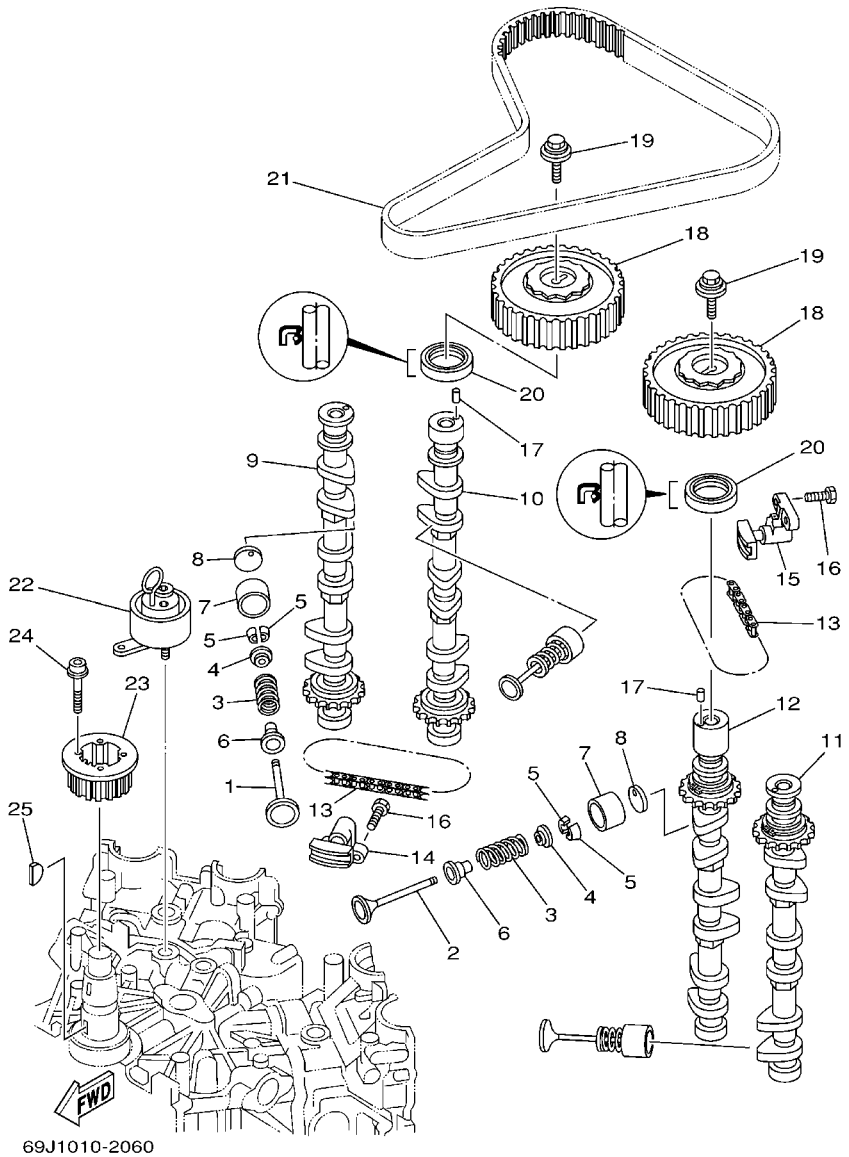

FIG. 6 VALVE SOUPAPE

REF. NO.	PART NO. N° PIECES	DESCRIPTION DESCRIPTION	69J3	60L3	69K3	60M3		REMARKS REMARQUES
23	69J–11536–00	GEAR, DRIVE ENGRENAGE, MENANT	1	1	1	1		
24	90110–05010	BOLT, HEXAGON SOCKET HEAD BOULON, TETE HEXAGONALE CREUSE	4	4	4	4		
25	90280–04008	KEY, WOODRUFF CLAVETTE, DEMI-LUNE	1	1	1	1		

FIG. 7 INTAKE 1 — ADMISSION 1

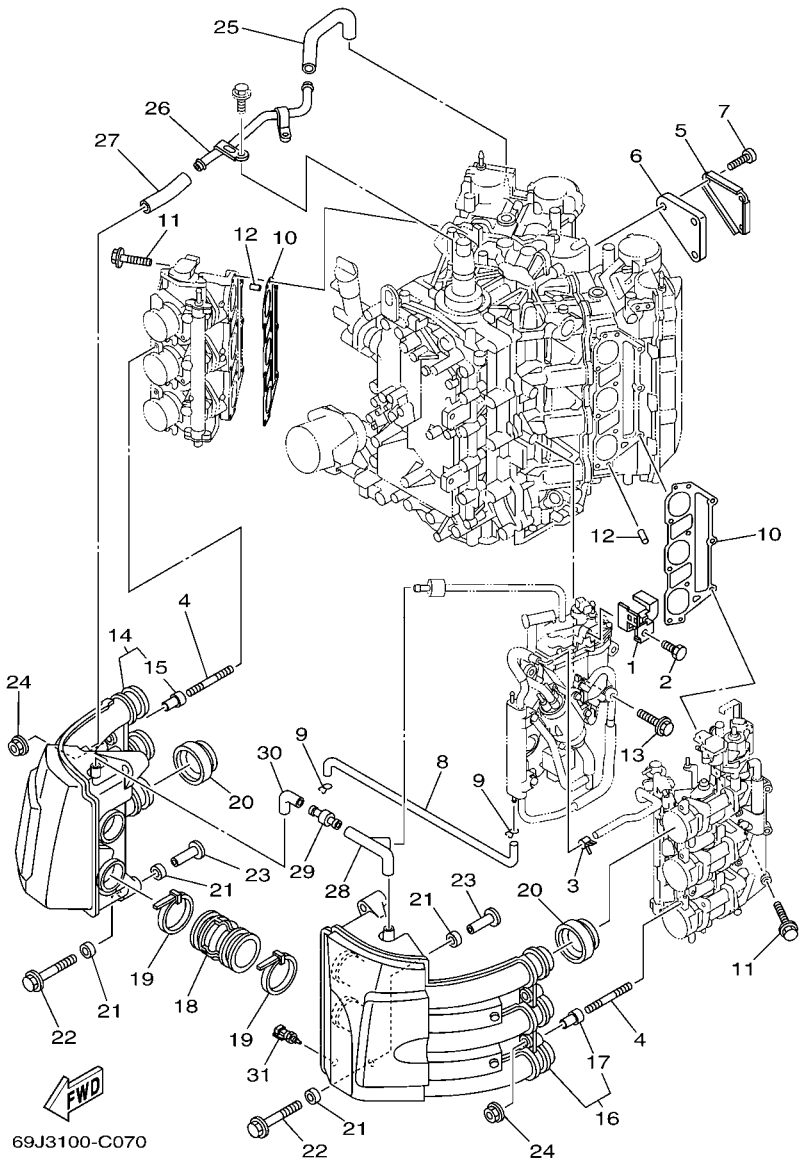

REF. NO.	PART NO. N° PIECES	DESCRIPTION DESCRIPTION	69J3	60L3	69K3	60M3		REMARKS REMARQUES
1	69J–14146–10	PLATE PLAQUE	1	1	1	1		
2	69J–14162–00	BOLT, HOLDING BOULON, FIXATION	1	1	1	1		
3	68V–24519–00	CLIP JONC	1	1	1	1		
4	90116–06032	BOLT, STUD GOUJON	4	4	4	4		
5	69J–1442A–00	COVER, CLEANER CASE 3 COUVERCLE, BOITIER FILTRE 3	1	1	1	1		
6	69J–14409–00	DAMPER AMORTISSEUR	1	1	1	1		
7	97780–60620	SCREW, TAPPING VIS, TETE BOMBEE	3	3	3	3		
8	69J–12483–00	PIPE 3 DURITE 3	1	1	1	1		
9	90467–09M03	CLIP JONC	2	2	2	2		
10	69J–13645–00	GASKET, MANIFOLD 1 JOINT, TUBULURE 1	2	2	2	2		
11	90119–08022	BOLT, WITH WASHER BOULON, AVEC RONDELLE	18	18	18	18		
12	91690–50014	PIN, SPRING AGRAFFE	4	4	4	4		
13	90119–06M24	BOLT, WITH WASHER BOULON, AVEC RONDELLE	4	4	4	4		
14	69J–14440–00	SILENCER ASSY, INTAKE SIENCIEUX D'ADMISSION	1	1	1	1		
15	90387–07005	.COLLAR .COLLERETTE	2	2	2	2		
16	69J–1444F–00	SILENCER ASSY, INTAKE 2 SIENCIEUX D'ADMISSION 2	1	1	1	1		
17	90387–07005	.COLLAR .COLLERETTE	2	2	2	2		
18	69J–14419–00	PIPE DURITE	2	2	2	2		
19	90465–11M52	CLAMP BRIDE	4	4	4	4		
20	69J–14457–00	SEAL JOINT	6	6	6	6		
21	90386–08001	BUSH DOUILLE	8	8	8	8		
22	90119–06036	BOLT, WITH WASHER BOULON, AVEC RONDELLE	4	4	4	4		
23	90387–06038	COLLAR COLLERETTE	4	4	4	4		
24	90179–06M28	NUT ECROU	4	4	4	4		
25	69J–15373–00	PIPE, BREATHER DURITE DE RENIFLARD	1	1	1	1		
26	69J–15394–00	PIPE, OIL VENT DURITE	1	1	1	1		
27	69J–15393–00	PIPE, BREATHER 2 DURITE, RENIFLARD 2	1	1	1	1		

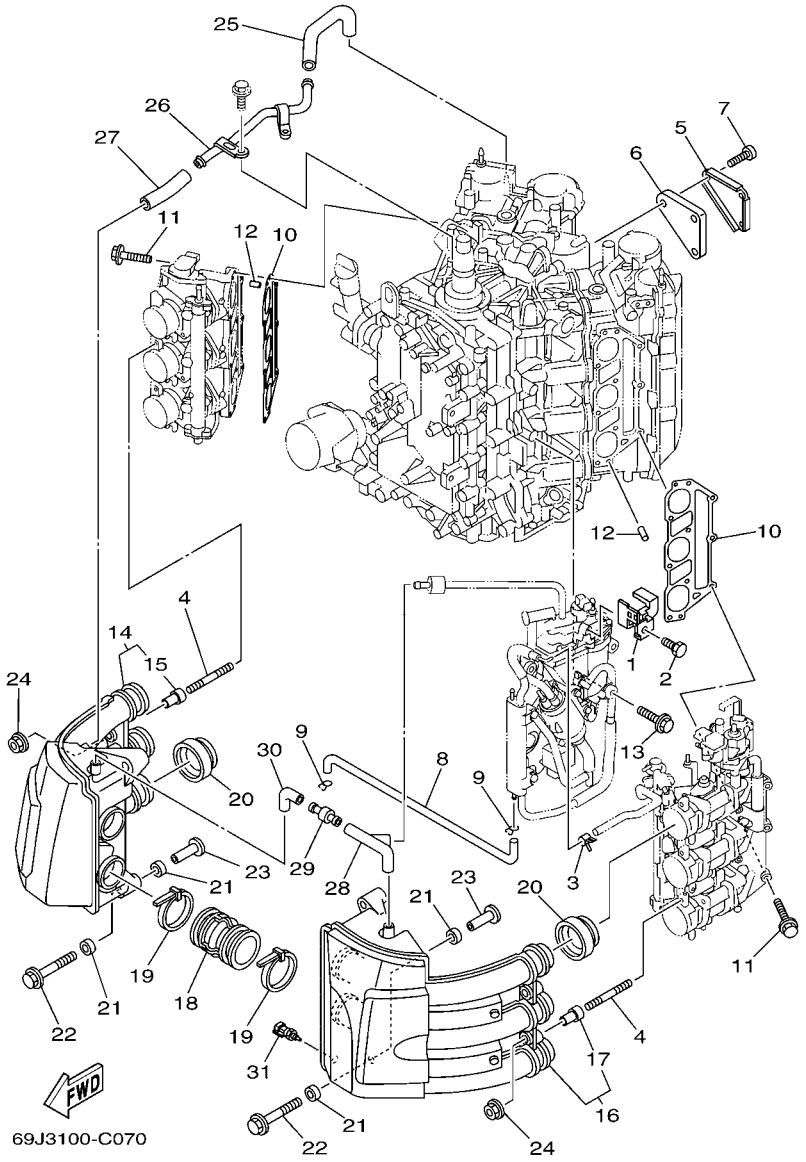

FIG. 7 INTAKE 1 — ADMISSION 1

REF. NO.	PART NO. N° PIECES	DESCRIPTION DESCRIPTION	69J3	60L3	69K3	60M3		REMARKS REMARQUES
28	69J–15397–00	PIPE DURITE	1	1	1	1		
29	5EL–14467–00	SEAL JOINT SPY	1	1	1	1		
30	69J–14348–00	PIPE 1 DURITE	1	1	1	1		
31	65L–85886–00	THERMOSENSOR SENSITOMETRE	1	1	1	1		

FIG. 8 INTAKE 2 ADMISSION 2

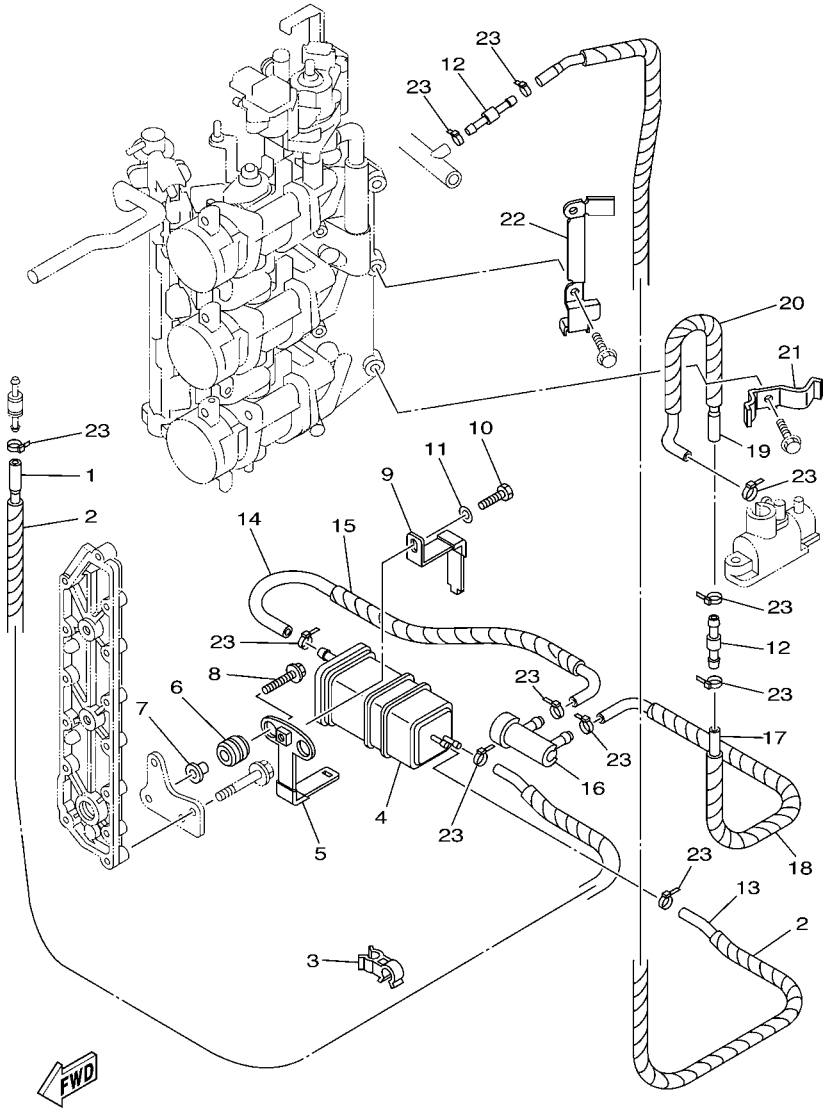

69J3100-C080

1: NEW PARTS
STARTING SERIAL NO. : 60L-1002933 ~ , 60M- 1000604 ~
69J-1010791 ~ , 69K- 1003796 ~

REF. NO.	PART NO. N° PIECES	DESCRIPTION DESCRIPTION	69J3	60L3	69K3	60M3		REMARKS REMARQUES
1	60L–24315–00	PIPE 5 DURITE 5	1	1	1	1		NEW PARTS *1 NEW PARTS *1
2	90448–10005	HOSE, WITH UNION DURITE, AVEC RACCORD	2	2	2	2		NEW PARTS *1 NEW PARTS *1
3	90464–12004	CLAMP BRIDE	1	1	1	1		NEW PARTS *1 NEW PARTS *1
4	69J–24170–00	CANISTER ASSY BANDE, RASERVOIR A ESSENCE	1	1	1	1		NEW PARTS *1 NEW PARTS *1
5	69J–2134X–00	BRACKET, CANISTER SUPPORT	1	1	1	1		NEW PARTS *1 NEW PARTS *1
6	90480–10M23	GROMMET PASSE-FIL	2	2	2	2		NEW PARTS *1 NEW PARTS *1
7	90387–06M60	COLLAR COLLERETTE	2	2	2	2		NEW PARTS *1 NEW PARTS *1
8	90119–06M59	BOLT, WITH WASHER BOULON, AVEC RONDELLE	2	2	2	2		NEW PARTS *1 NEW PARTS *1
9	69J–2419A–00	HOLDER SUPPORT	1	1	1	1		NEW PARTS *1 NEW PARTS *1
10	97095–06016	BOLT BOULON	1	1	1	1		NEW PARTS *1 NEW PARTS *1
11	92995–06600	WASHER RONDELLE	1	1	1	1		NEW PARTS *1 NEW PARTS *1
12	6E5–24379–00	PIPE, JOINT 4 DURITE RACCORDEMENT 4	2	2	2	2		NEW PARTS *1 NEW PARTS *1
13	60L–24314–00	PIPE 4 DURITE 4	1	1	1	1		NEW PARTS *1 NEW PARTS *1
14	60L–24313–00	PIPE 3 DURITE 3	1	1	1	1		NEW PARTS *1 NEW PARTS *1
15	90448–12002	HOSE, WITH UNION DURITE, AVEC RACCORD	1	1	1	1		NEW PARTS *1 NEW PARTS *1
16	69J–24502–00	FILTER, FUEL FILTRE	1	1	1	1		NEW PARTS *1 NEW PARTS *1
17	60L–24312–00	PIPE 2 DURITE 2	1	1	1	1		NEW PARTS *1 NEW PARTS *1
18	90448–12001	HOSE, WITH UNION DURITE, AVEC RACCORD	1	1	1	1		NEW PARTS *1 NEW PARTS *1
19	60L–24311–00	PIPE, FUEL 1 DURITE A ESSENCE	1	1	1	1		NEW PARTS *1 NEW PARTS *1
20	90448–10002	HOSE, WITH UNION DURITE, AVEC RACCORD	1	1	1	1		NEW PARTS *1 NEW PARTS *1
21	60L–24367–00	CLAMP, FUEL PIPE 2 COLLIER DE DURITE A ESSENCE	1	1	1	1		NEW PARTS *1 NEW PARTS *1
22	60L–24366–00	CLAMP, FUEL PIPE 1 COLLIER DE DURITE A ESSENCE	1	1	1	1		NEW PARTS *1 NEW PARTS *1
23	90465–11M10	CLAMP BRIDE	11	11	11	11		NEW PARTS *1 NEW PARTS *1

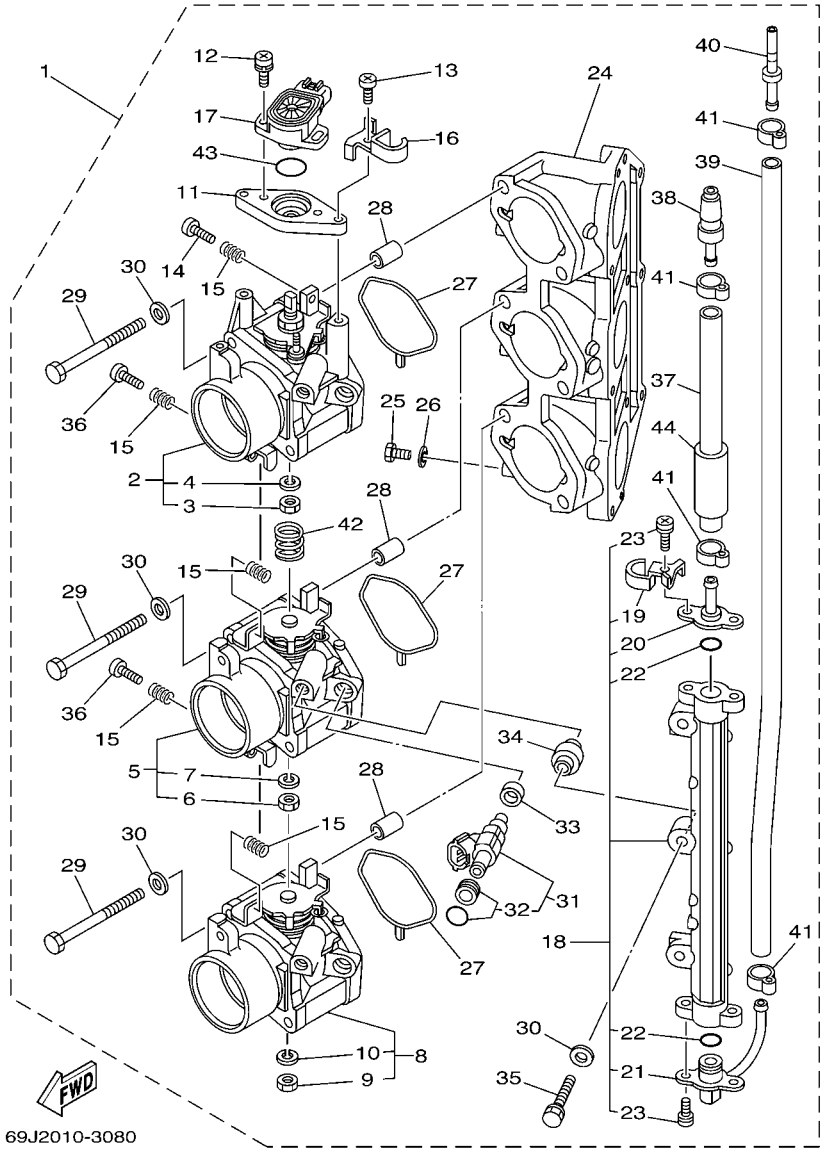

FIG. 9 THROTTLE BODY ASSY 1 CARTER D'ACCELERATEUR 1

REF. NO.	PART NO. N° PIECES	DESCRIPTION DESCRIPTION	69J3	60L3	69K3	60M3		REMARKS REMARQUES
1	69J–13750–00	THROTTLE BODY ASSY CARTER D'ACCELERATEUR COMPLET	1		1			
	60L–13750–00	THROTTLE BODY ASSY CARTER D'ACCELERATEUR COMPLET		1		1		
2	69J–13751–00	.BODY, THROTTLE 1 .CARTER 1	1		1			
	60L–13751–00	.BODY, THROTTLE 1 .CARTER 1		1		1		
3	3CF–14594–00	..NUT ..ECROU	1	1	1	1		
4	92990–08100	..WASHER, SPRING ..RONDELLE, GROWER	1	1	1	1		
5	69J–13753–00	.BODY, THROTTLE 3 .CARTER 3	1		1			
	60L–13753–00	.BODY, THROTTLE 3 .CARTER 3		1		1		
6	3CF–14594–00	..NUT ..ECROU	1	1	1	1		
7	92990–08100	..WASHER, SPRING ..RONDELLE, GROWER	1	1	1	1		
8	69J–13755–00	.BODY, THROTTLE 5 .CARTER 5	1		1			
	60L–13755–00	.BODY, THROTTLE 5 .CARTER 5		1		1		
9	3CF–14594–00	..NUT ..ECROU	1	1	1	1		
10	92990–08100	..WASHER, SPRING ..RONDELLE, GROWER	1	1	1	1		
11	69J–13576–00	.SPACER .ENTRETOISE	1	1	1	1		
12	68V–81145–01	.SCREW 1 .VIS 1	2	2	2	2		
13	68V–14565–00	.SCREW .VIS	2	2	2	2		
14	68V–14323–00	.SCREW, AIR ADJUSTING .VIS DE DOSEUR D'AIR	1	1	1	1		
15	68V–14331–00	.SPRING, THROTTLE VALVE .RESSORT, BOISSEAU	5	5	5	5		
16	69J–14261–00	.HOLDER .SUPPORT	1	1	1	1		
17	69J–85885–00	.THROTTLE SENSOR ASSY .SENSITOMETRE (ENS.)	1	1	1	1		
18	69J–13160–00	.DELIVERY PIPE ASSY 1 .ENS. TUBE DE REFOULEMENT 1	1	1	1	1		
19	69J–14261–00	..HOLDER ..SUPPORT	1	1	1	1		
20	69J–14295–00	..PIPE, FUEL ..DURITE A ESSENCE	1	1	1	1		
21	69J–14251–00	..NIPPLE ..RACCORD	1	1	1	1		
22	68V–14397–00	..O-RING ..JOINT TORIQUE	2	2	2	2		
23	68V–81147–00	..SCREW 3 ..VIS 3	4	4	4	4		

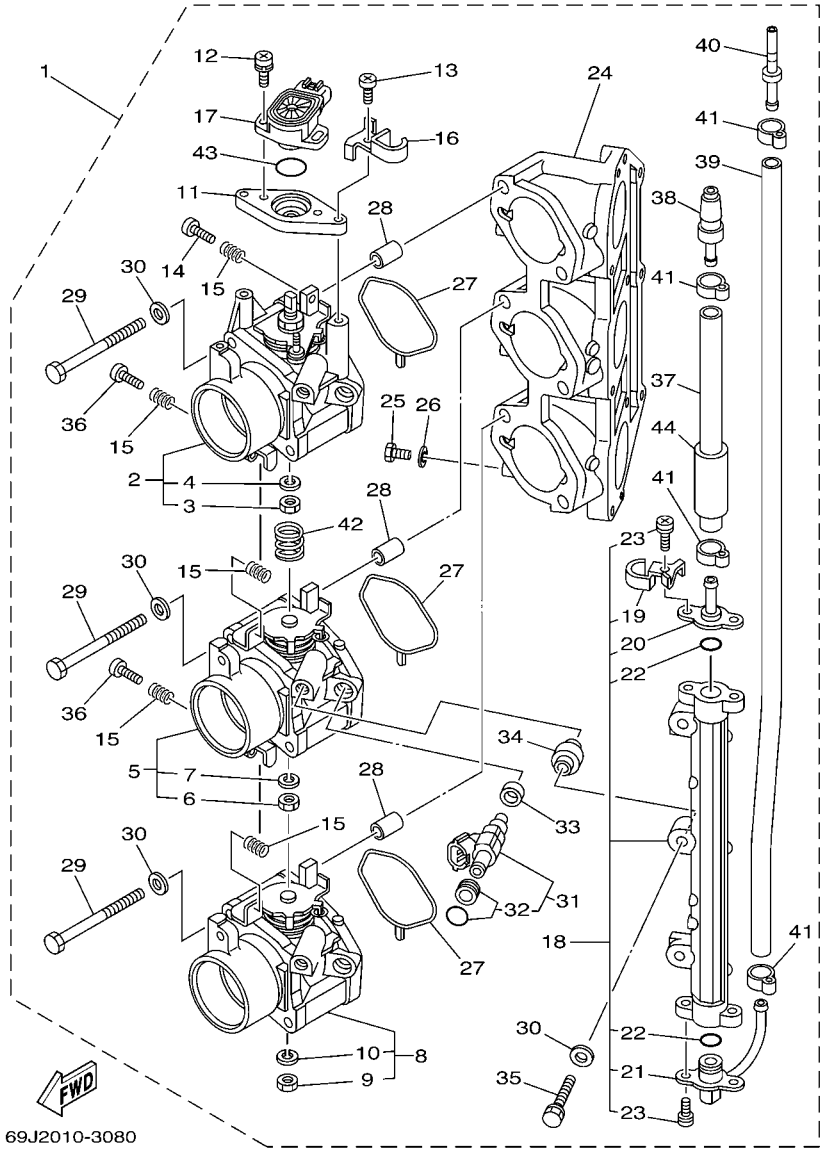

FIG. 9 THROTTLE BODY ASSY 1 CARTER D'ACCELERATEUR 1

REF. NO.	PART NO. N° PIECES	DESCRIPTION DESCRIPTION	69J3	60L3	69K3	60M3		REMARKS REMARQUES
24	69J–13641–00	.MANIFOLD 1 .TUBULURE 1	1	1	1	1		
25	97095–06010	.BOLT .BOULON	3	3	3	3		
26	90430–06014	.GASKET .JOINT	3	3	3	3		
27	69J–13557–00	.GASKET .JOINT	3	3	3	3		
28	99530–10114	.PIN, DOWEL .GOUJON, D'ASSEMBLAGE	6	6	6	6		
29	69J–14496–00	.BOLT .BOULON	6	6	6	6		
30	68V–14475–00	.WASHER .RONDELLE	9	9	9	9		
31	69J–13761–00	.INJECTOR ASSY .INJECTEUR	3	3	3	3		
32	68V–1410B–00	..PACKING KIT ..POCHETTE DE JOINTS	1	1	1	1		
33	68V–13766–00	.RUBBER, INJECTOR .RONDELLE CAOUTCHOUC	3	3	3	3		
34	68V–14264–00	.COLLAR .COLLERETTE	3	3	3	3		
35	68V–14428–00	.BOLT .BOULON	3	3	3	3		
36	69J–14321–00	.SCREW, THROTTLE .VIS, ACCELERATEUR	2	2	2	2		
37	69J–13973–00	.PIPE, FUEL 3 .TUBE 3, CARBURANT	1	1	1	1		
38	68F–24300–00	.FUEL PIPE JOINT .DURITE RACCORDEMT. A ESSENCE	1	1	1	1		
39	69J–13972–00	.PIPE, FUEL 2 .TUBE 2, CARBURANT	1	1	1	1		
40	69J–24381–00	.SET BAR, FUEL JOINT .BARRE DE BLOCAGE	1	1	1	1		
41	68V–24387–00	.CLIP .SANDOW	4	4	4	4		
42	69J–14286–00	.SPRING .RESSORT	1		1			
	60L–14286–00	.SPRING .RESSORT		1		1		
43	68V–8182L–00	.O-RING 1 .JOINT TORIQUE 1	1	1	1	1		
44	69J–14149–00	.PIPE .DURITE	1	1	1	1		

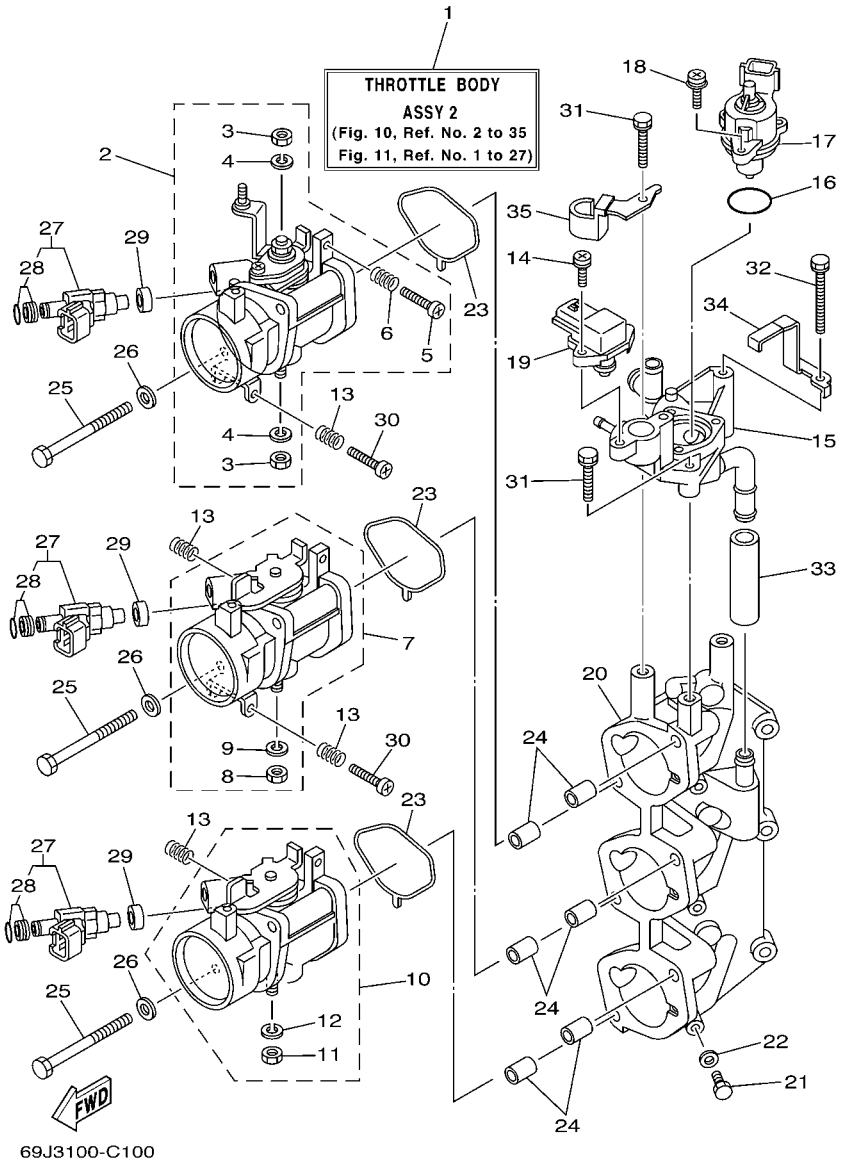

1: NEW PARTS
STARTING SERIAL NO. : 60L-1002933 ~ , 60M- 1000604 ~
69J-1010791 ~ , 69K- 1003796 ~

FIG. 10 THROTTLE BODY ASSY 2 CARTER D'ACCELERATEUR 2

REF. NO.	PART NO. N° PIECES	DESCRIPTION DESCRIPTION	69J3	60L3	69K3	60M3		REMARKS REMARQUES
1	69J–1375A–00	THROTTLE BODY ASSY 2 CARTER D'ACCELERATEUR COMPLET2	1		1			
	69J–1375A–10	THROTTLE BODY ASSY 2 CARTER D'ACCELERATEUR COMPLET2	1		1			NEW PARTS *1 NEW PARTS *1
	60L–1375A–00	THROTTLE BODY ASSY 2 CARTER D'ACCELERATEUR COMPLET2		1		1		
	60L–1375A–10	THROTTLE BODY ASSY 2 CARTER D'ACCELERATEUR COMPLET2		1		1		NEW PARTS *1 NEW PARTS *1
2	69J–13752–00	BODY, THROTTLE 2 CARTER 2	1		1			
	60L–13752–00	BODY, THROTTLE 2 CARTER 2		1		1		
3	3CF–14594–00	.NUT .ECROU	2	2	2	2		
4	92990–08100	.WASHER, SPRING .RONDELLE, GROWER	2	2	2	2		
5	68V–14323–00	.SCREW, AIR ADJUSTING .VIS DE DOSEUR D'AIR	1	1	1	1		
6	68V–14331–00	.SPRING, THROTTLE VALVE .RESSORT, BOISSEAU	1	1	1	1		
7	69J–13754–00	BODY, THROTTLE 4 CARTER 4	1		1			
	60L–13754–00	BODY, THROTTLE 4 CARTER 4		1		1		
8	3CF–14594–00	.NUT .ECROU	1	1	1	1		
9	92990–08100	.WASHER, SPRING .RONDELLE, GROWER	1	1	1	1		
10	69J–13756–00	BODY, THROTTLE 6 CARTER 6	1		1			
	60L–13756–00	BODY, THROTTLE 6 CARTER 6		1		1		
11	3CF–14594–00	.NUT .ECROU	1	1	1	1		
12	92990–08100	.WASHER, SPRING .RONDELLE, GROWER	1	1	1	1		
13	68V–14331–00	SPRING, THROTTLE VALVE RESSORT, BOISSEAU	4	4	4	4		
14	68V–81147–00	SCREW 3 VIS 3	2	2	2	2		
15	69J–14960–00	BODY ASSY CARTER (ENS.)	1	1	1	1		
16	68V–13473–00	O-RING JOINT TORIQUE	1	1	1	1		
17	68V–1312A–00	VALVE, CONTROL EMBLEME, YAMAHA	1	1	1	1		
18	68V–81146–01	SCREW 2 VIS 2	3	3	3	3		
19	68V–82380–00	SENSOR, PRESSURE SONDE DE PRESSION	1	1	1	1		
20	69J–13642–00	MANIFOLD 2 TUBULURE 2	1	1	1	1		
21	97095–06010	BOLT BOULON	3	3	3	3		

FIG. 10 THROTTLE BODY ASSY 2 CARTER D'ACCELERATEUR 2

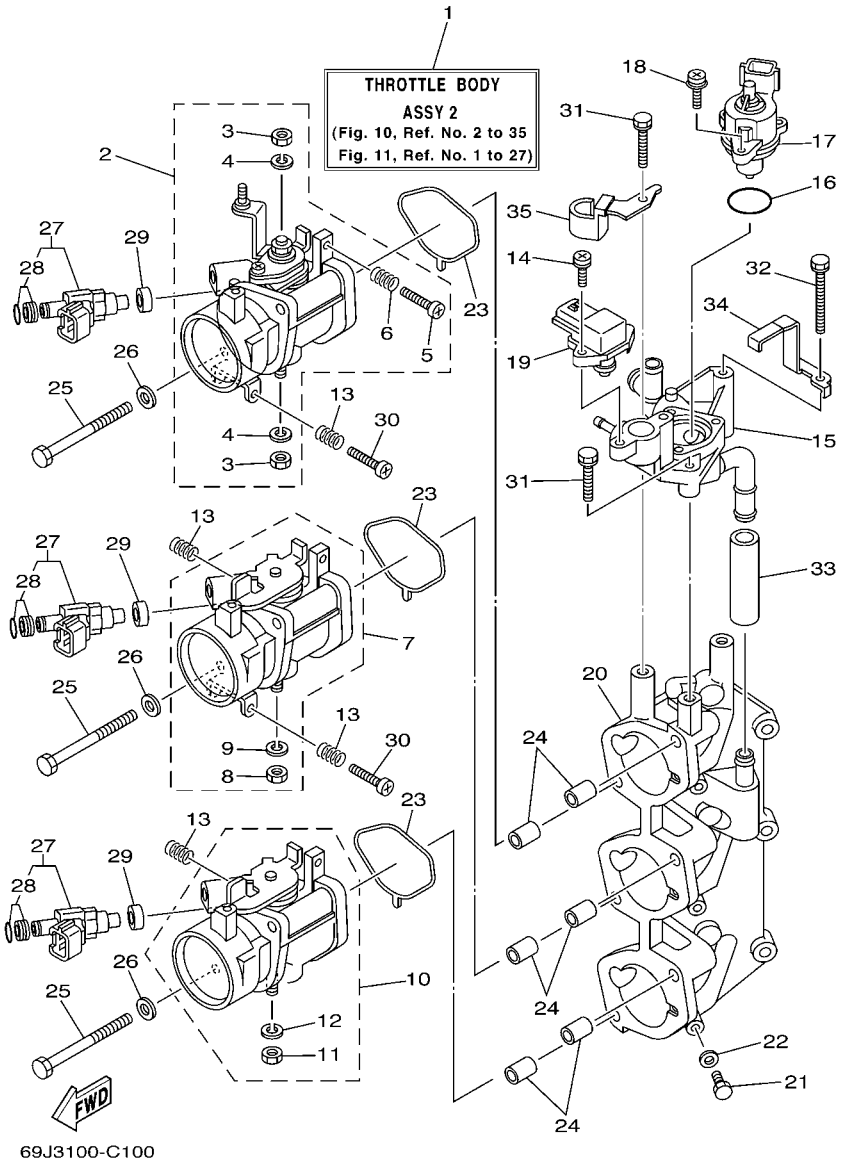

1: NEW PARTS
STARTING SERIAL NO. : 60L-1002933 ~ , 60M- 1000604 ~
69J-1010791 ~ , 69K- 1003796 ~

REF. NO.	PART NO. N° PIECES	DESCRIPTION DESCRIPTION	69J3	60L3	69K3	60M3		REMARKS REMARQUES
22	90430–06014	GASKET JOINT	3	3	3	3		
23	69J–13557–00	GASKET JOINT	3	3	3	3		
24	99530–10114	PIN, DOWEL GOUJON, D'ASSEMBLAGE	6	6	6	6		
25	69J–14496–00	BOLT BOULON	6	6	6	6		
26	68V–14475–00	WASHER RONDELLE	6	6	6	6		
27	69J–13761–00	INJECTOR ASSY INJECTEUR	3	3	3	3		
28	68V–1410B–00	.PACKING KIT .POCHETTE DE JOINTS	1	1	1	1		
29	68V–13766–00	RUBBER, INJECTOR RONDELLE CAOUTCHOUC	3	3	3	3		
30	69J–14321–00	SCREW, THROTTLE VIS, ACCELERATEUR	2	2	2	2		
31	69J–13573–00	BOLT 1 BOULON 1	2	2	2	2		
32	69J–13574–00	BOLT 2 BOULON 2	1	1	1	1		
33	69J–13547–00	HOSE 3 DURITE 3	1	1	1	1		
34	69J–14159–00	CLIP JONC	1	1	1	1		
35	69J–14255–00	PLATE PLAQUE	1	1	1	1		

FIG. 11 THROTTLE BODY ASSY 3 CARTER D'ACCELERATEUR 3

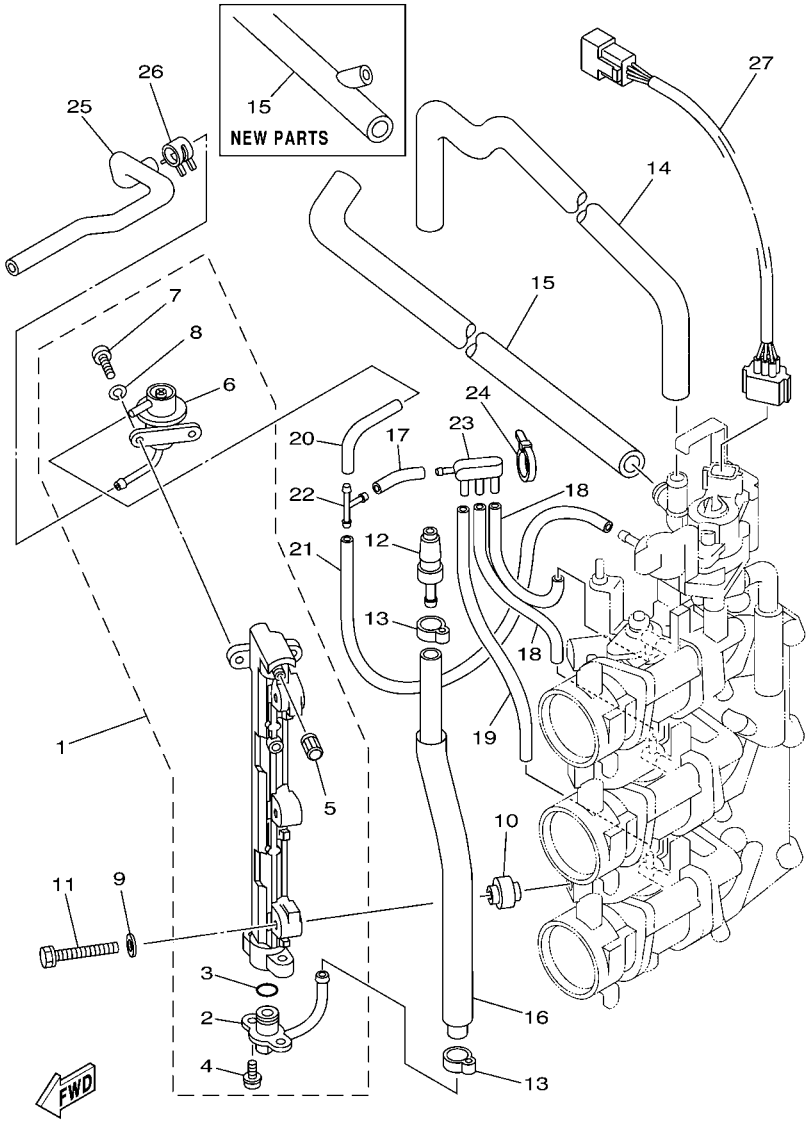

1: NEW PARTS
STARTING SERIAL NO. : 60L-1002933 ~ , 60M- 1000604 ~
69J-1010791 ~ , 69K- 1003796 ~

REF. NO.	PART NO. N° PIECES	DESCRIPTION DESCRIPTION	69J3	60L3	69K3	60M3		REMARKS REMARQUES
1	69J–13170–00	DELIVERY PIPE ASSY 2 ENS. TUBE DE REFOULEMENT 2	1	1	1	1		
2	69J–13435–00	.NIPPLE .RACCORD	1	1	1	1		
3	68V–14397–00	.O-RING .JOINT TORIQUE	1	1	1	1		
4	68V–81147–00	.SCREW 3 .VIS 3	2	2	2	2		
5	68V–14225–00	.CAP .COUVERCLE	1	1	1	1		
6	69J–13906–00	.REGULATOR, PRESSURE .REGULATEUR DE PRESSION	1	1	1	1		
7	68V–14565–00	.SCREW .VIS	2	2	2	2		
8	68V–14356–00	.WASHER, SPRING .RONDELLE	2	2	2	2		
9	68V–14475–00	WASHER RONDELLE	3	3	3	3		
10	68V–14264–00	COLLAR COLLERETTE	3	3	3	3		
11	68V–14428–00	BOLT BOULON	3	3	3	3		
12	68F–24300–00	FUEL PIPE JOINT DURITE RACCORDEMT. A ESSENCE	1	1	1	1		
13	68V–24387–00	CLIP SANDOW	2	2	2	2		
14	69J–13546–00	HOSE 2 DURITE 2	1	1	1	1		
15	69J–13545–00	HOSE 1 DURITE 1	1	1	1	1		
	60L–24317–00	PIPE 7 DURITE 7	1	1	1	1		NEW PARTS *1 NEW PARTS *1
16	69J–13974–00	PIPE, FUEL 4 TUBE 4, CARBURANT	1	1	1	1		
17	68V–13544–00	HOSE, VACUUM SENSING 2 DURITE 2	1	1	1	1		
18	5JW–14349–00	PIPE DURITE	2	2	2	2		
19	69J–13542–00	HOSE, VACUUM SENSING 1 DURITE 1	1	1	1	1		
20	69J–13532–00	HOSE, VACUUM SENSING 3 DURITE 3	1	1	1	1		
21	69J–13533–00	HOSE, VACUUM SENSING 4 DURITE 4	1	1	1	1		
22	68V–24377–00	PIPE, JOINT 3 DURITE RACCORDEMENT 3	1	1	1	1		
23	69J–13595–00	JOINT RACCORD	1	1	1	1		
24	69J–14139–00	CLIP, PIPE JONC DE DURITE	1	1	1	1		
25	69J–13975–00	PIPE, FUEL 5 TUBE 5, CARBURANT	1	1	1	1		
26	68V–24519–00	CLIP JONC	1	1	1	1		

FIG. 11 THROTTLE BODY ASSY 3 CARTER D'ACCELERATEUR 3

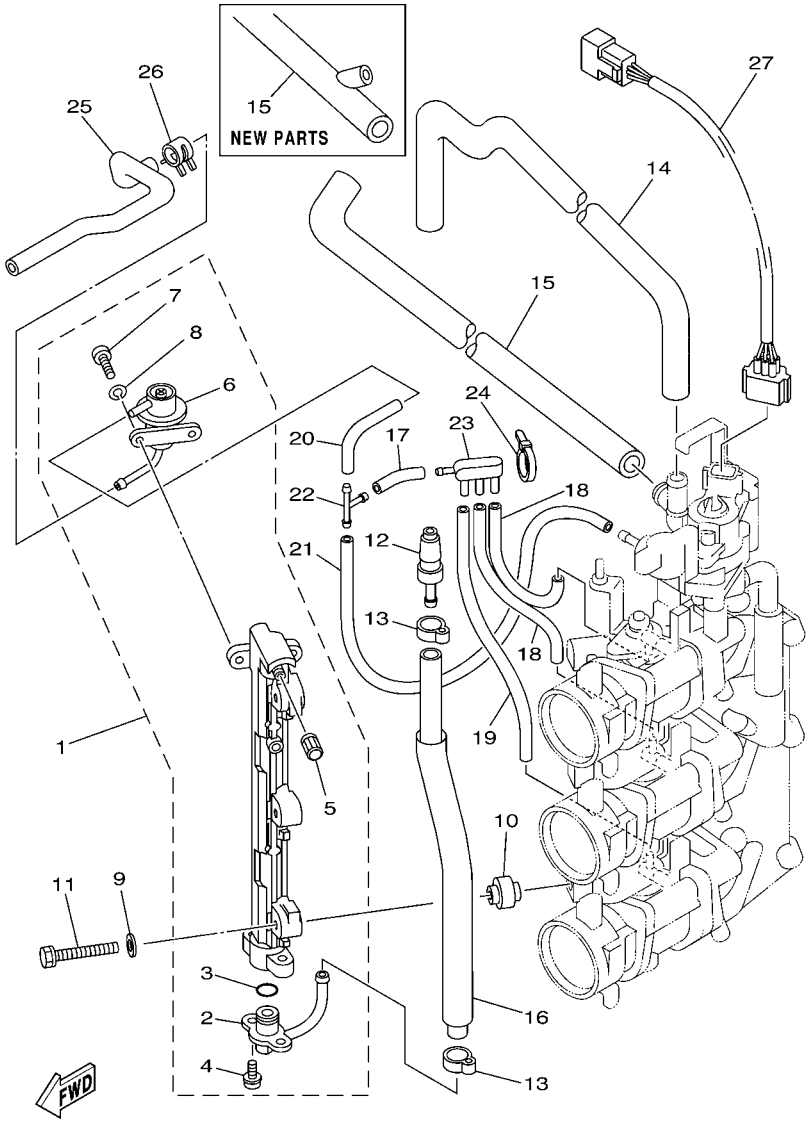

69J3100-C110

1: NEW PARTS
STARTING SERIAL NO. : 60L-1002933 ~ , 60M- 1000604 ~
69J-1010791 ~ , 69K- 1003796 ~

REF. NO.	PART NO. N° PIECES	DESCRIPTION DESCRIPTION	69J3	60L3	69K3	60M3		REMARKS REMARQUES
27	69J–8259L–00	WIRE HARNESS ASSY 1 FAISCEAU DE FILS COMPLET 1	1	1	1	1		

FIG. 12 FUEL INJECTION PUMP 1 POMPE A INJECTEUR 1

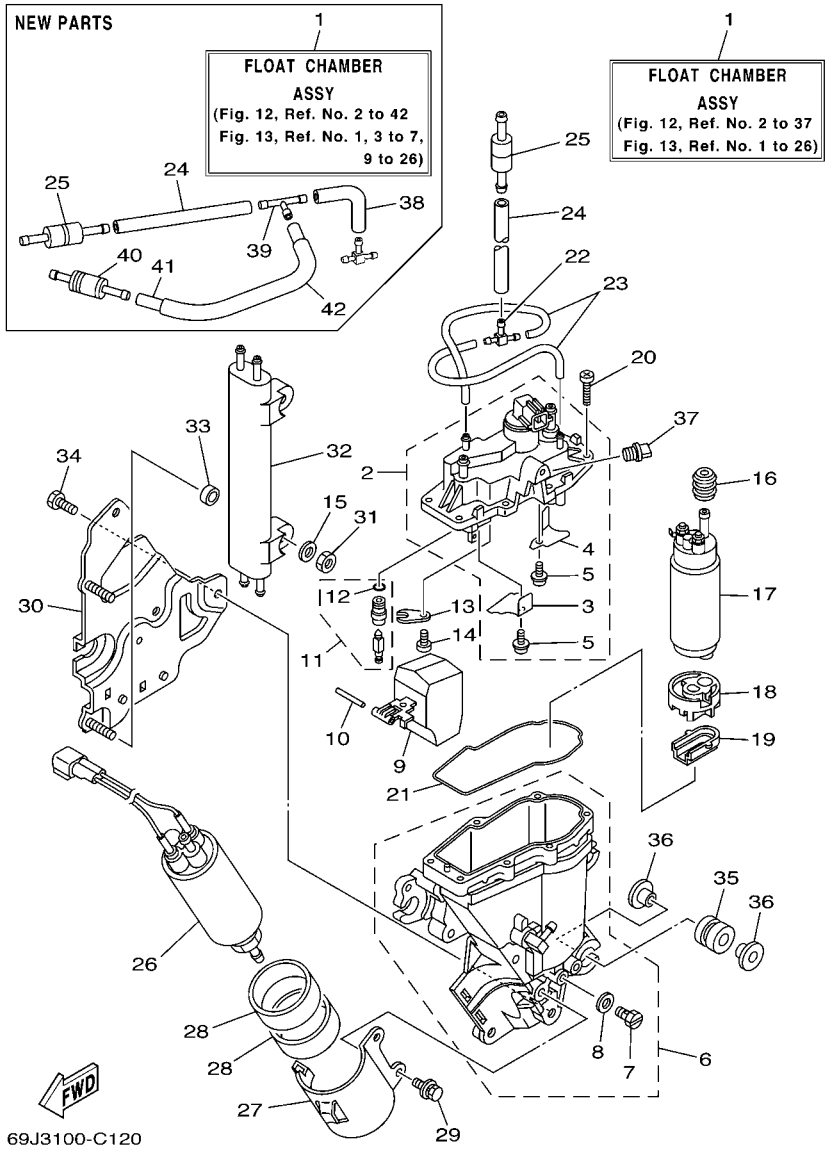

1: NEW PARTS
STARTING SERIAL NO. : 60L-1002933 ~ , 60M- 1000604 ~
69J-1010791 ~ , 69K- 1003796 ~

REF. NO.	PART NO. N° PIECES	DESCRIPTION DESCRIPTION	69J3	60L3	69K3	60M3		REMARKS REMARQUES
1	69J–14180–11	FLOAT CHAMBER ASSY CUVE DE FLOTTEUR	1	1	1	1		
	69J–14180–20	FLOAT CHAMBER ASSY CUVE DE FLOTTEUR	1	1	1	1		NEW PARTS *1 NEW PARTS *1
2	69J–14182–00	COVER, FLOAT CHAMBER COUVERCLE, CUVE DE FLOTTEUR	1	1	1	1		
	69J–14182–10	COVER, FLOAT CHAMBER COUVERCLE, CUVE DE FLOTTEUR	1	1	1	1		NEW PARTS *1 NEW PARTS *1
3	69J–2411R–00	.PLATE 1 .PLAQUE 1	1	1	1	1		
4	69J–2411T–00	.PLATE 2 .PLAQUE 2	1	1	1	1		
5	4SV–24453–00	.SCREW .VIS	2	2	2	2		
6	69J–14181–00	BODY, FLOAT CHAMBER 1 CORPS, CUVE DE FLOTTEUR 1	1	1	1	1		
7	266–14191–00	.PLUG, DRAIN .PLOT, VIDANGE	1	1	1	1		
8	59V–14962–00	.WASHER .RONDELLE	1	1	1	1		
9	69J–14985–00	FLOAT FLOTTEUR	1	1	1	1		
10	68V–14386–00	PIN, FLOAT AXE, FLOTTEUR	1	1	1	1		
11	69J–14546–00	VALVE, NEEDLE POINTEAU	1	1	1	1		
12	68V–13769–00	.O-RING .JOINT TORIQUE	1	1	1	1		
13	68V–14255–00	PLATE PLAQUE	1	1	1	1		
14	98507–04008	SCREW, PAN HEAD VIS, TETE TRONCONIQUE	1	1	1	1		
15	68V–14357–00	WASHER, PLAIN RONDELLE PLATE	2	2	2	2		
16	68V–13781–00	DAMPER, PUMP AMORTISSEUR, POMPE	1	1	1	1		
	68V–13781–10	DAMPER, PUMP AMORTISSEUR, POMPE	1	1	1	1		NEW PARTS *1 NEW PARTS *1
17	69J–13907–01	FUEL PUMP COMP. POMPE A CARBURANT COMP.	1	1	1	1		
18	68V–13915–00	FILTER FILTRE	1	1	1	1		
19	68V–13784–00	COVER, PUMP COUVERCLE, POMPE	1	1	1	1		
20	68V–14567–00	SCREW VIS	7	7	7	7		
21	68V–14984–00	GASKET, FLOAT CHAMBER JOINT, CUVE DE FLOTTEUR	1	1	1	1		
22	69J–24379–00	PIPE, JOINT 4 DURITE RACCORDEMENT 4	1	1	1	1		
23	69J–14148–00	PIPE DURITE	2	2	2	2		
24	69J–14197–00	PIPE DURITE	1	1	1	1		

FIG. 12 FUEL INJECTION PUMP 1 POMPE A INJECTEUR 1

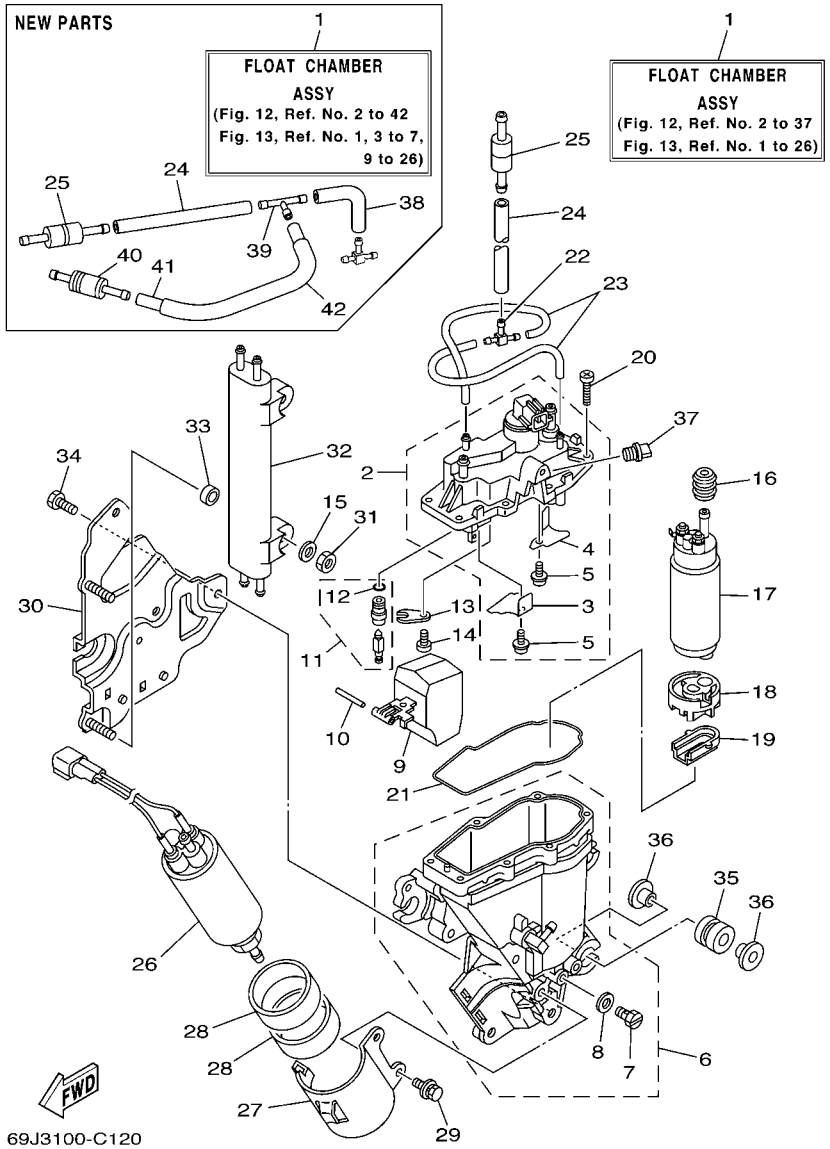

1: NEW PARTS
STARTING SERIAL NO. : 60L-1002933 ~ , 60M- 1000604 ~
69J-1010791 ~ , 69K- 1003796 ~

REF. NO.	PART NO. N° PIECES	DESCRIPTION DESCRIPTION	69J3	60L3	69K3	60M3		REMARKS REMARQUES
25	69J–14989–00	ORIFICE, AIR VENT OR1F1CE	1	1	1	1		
26	69J–24410–00	FUEL PUMP ASSY POMPE A ESSENCE	1	1	1	1		
27	69J–24491–00	BRACKET, FUEL PUMP SUPPORT, POMPE A ESSENCE	1	1	1	1		
28	69J–24492–00	BUSH, FULEL PUMP BAGUE	2	2	2	2		
29	69J–24592–00	BOLT BOLTE	2	2	2	2		
30	69J–24422–10	PLATE PLAQUETTE	1	1	1	1		
31	69J–14164–00	NUT, HOLDING ECROU, FIXATION	2	2	2	2		
32	69J–21841–00	COOLER RADIATEUR	1	1	1	1		
33	68V–14265–00	COLLAR COLLERETTE	2	2	2	2		
34	69J–14446–00	BOLT BOULON	3	3	3	3		
35	69J–13593–00	DAMPER AMORTISSEUR	4	4	4	4		
36	69J–13716–00	COLLAR COLLERETTE	8	8	8	8		
37	69J–14225–00	CAP COUVERCLE	1	1	1	1		
38	60L–24321–00	PIPE 10 DURITE 10	1	1	1	1		NEW PARTS *1 NEW PARTS *1
39	60L–24379–00	PIPE, JOINT 4 DURITE RACCORDEMENT 4	1	1	1	1		NEW PARTS *1 NEW PARTS *1
40	60L–13490–00	RELIEF VALVE ASSY SOUPAPE DE SECURITE COMPLET	1	1	1	1		NEW PARTS *1 NEW PARTS *1
41	60L–24316–00	PIPE 6 DURITE 6	1	1	1	1		NEW PARTS *1 NEW PARTS *1
42	60L–24327–00	PROTECTOR, PIPE PROTECTEUR DE DURITE	1	1	1	1		NEW PARTS *1 NEW PARTS *1

FIG. 13 FUEL INJECTION PUMP 2 POMPE A INJECTEUR 2

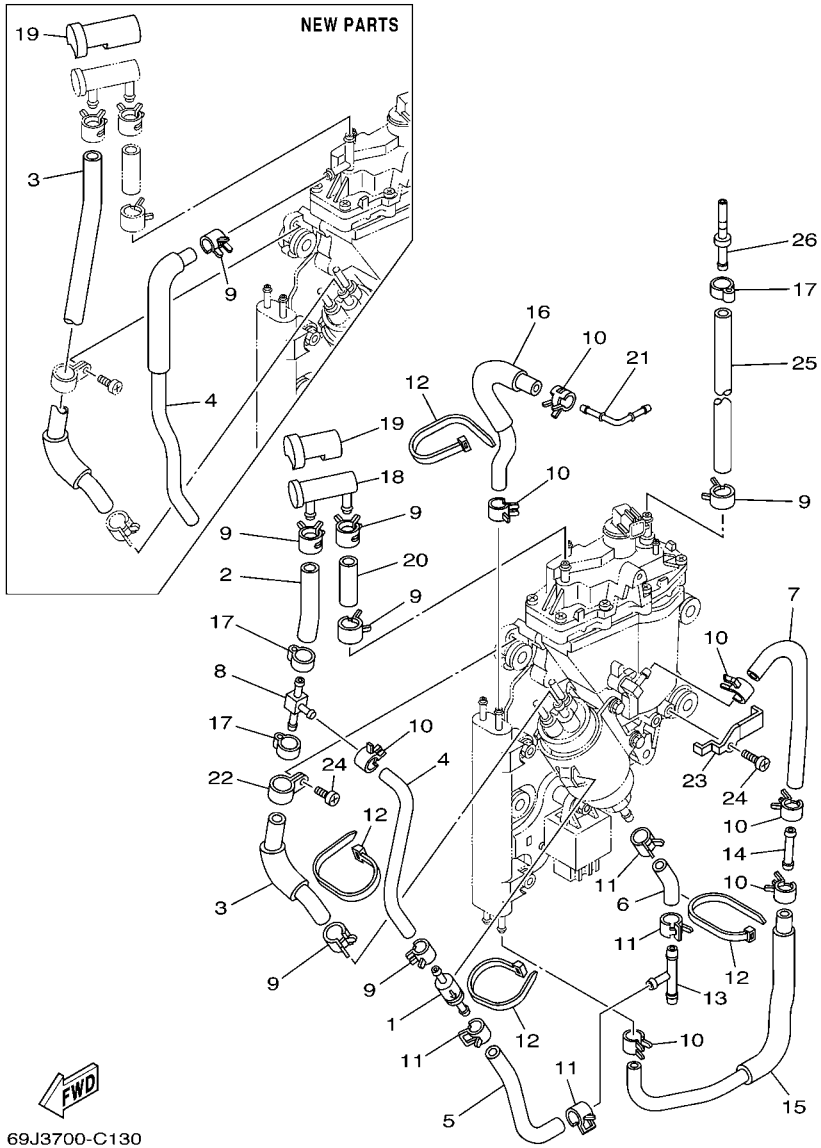

1: NEW PARTS
STARTING SERIAL NO. : 60L-1002933 ~ , 60M- 1000604 ~
69J-1010791 ~ , 69K- 1003796 ~

REF. NO.	PART NO. N° PIECES	DESCRIPTION DESCRIPTION	69J3	60L3	69K3	60M3		REMARKS REMARQUES
1	69J–24460–00	RELIEF VALVE ASSY SOUPAPE DE SECURITE COMPLET	1	1	1	1		
2	69J–24324–00	PIPE 13 DURITE 13	1	1	1	1		OLD PARTS OLD PARTS
3	69J–24321–00	PIPE 10 DURITE 10	1	1	1	1		
	69J–24324–10	PIPE 13 DURITE 13	1	1	1	1		NEW PARTS *1 NEW PARTS *1
4	69J–24322–00	PIPE 11 DURITE 11	1	1	1	1		
	69J–24322–10	PIPE 11 DURITE 11	1	1	1	1		NEW PARTS *1 NEW PARTS *1
5	69J–24323–00	PIPE 12 DURITE 12	1	1	1	1		
6	69J–24317–00	PIPE 7 DURITE 7	1	1	1	1		
7	69J–24316–00	PIPE 6 DURITE 6	1	1	1	1		
8	69J–24537–00	NIPPLE RACCORD	1	1	1	1		OLD PARTS OLD PARTS
9	68V–13577–00	CLIP AGRAFE	6	6	6	6		
10	68V–24519–00	CLIP JONC	6	6	6	6		
11	69J–14137–00	CLIP JONC	4	4	4	4		
12	68V–2481H–00	CLAMP BRIDE	4	4	4	4		
13	6E5–24378–00	PIPE, JOINT 3 DURITE, RACCORDEMENT 3	1	1	1	1		
14	69J–24461–00	PIPE, JOINT DURITE, RACCORDEMENT	1	1	1	1		
15	69J–24315–00	PIPE 5 DURITE 5	1	1	1	1		
16	69J–13976–00	PIPE, FUEL 6 TUBE 6, CARBURANT	1	1	1	1		
17	68V–24387–00	CLIP SANDOW	3	3	3	3		
	68V–24387–00	CLIP SANDOW	1	1	1	1		NEW PARTS *1 NEW PARTS *1
18	69J–24501–00	FILTER, FUEL FILTRE	1	1	1	1		
19	69J–24599–00	CAP CAPUCHON	1	1	1	1		
	69J–24599–10	CAP CAPUCHON	1	1	1	1		NEW PARTS *1 NEW PARTS *1
20	69J–24325–00	PIPE 14 DURITE 14	1	1	1	1		
21	69J–1410F–00	NIPPLE 1 RACCORD 1	1	1	1	1		
22	69J–24366–00	CLAMP, FUEL PIPE 1 COLLIER DE DURITE A ESSENCE	1	1	1	1		
23	69J–24367–00	CLAMP, FUEL PIPE 2 COLLIER DE DURITE A ESSENCE	1	1	1	1		

FIG. 13 FUEL INJECTION PUMP 2 POMPE A INJECTEUR 2

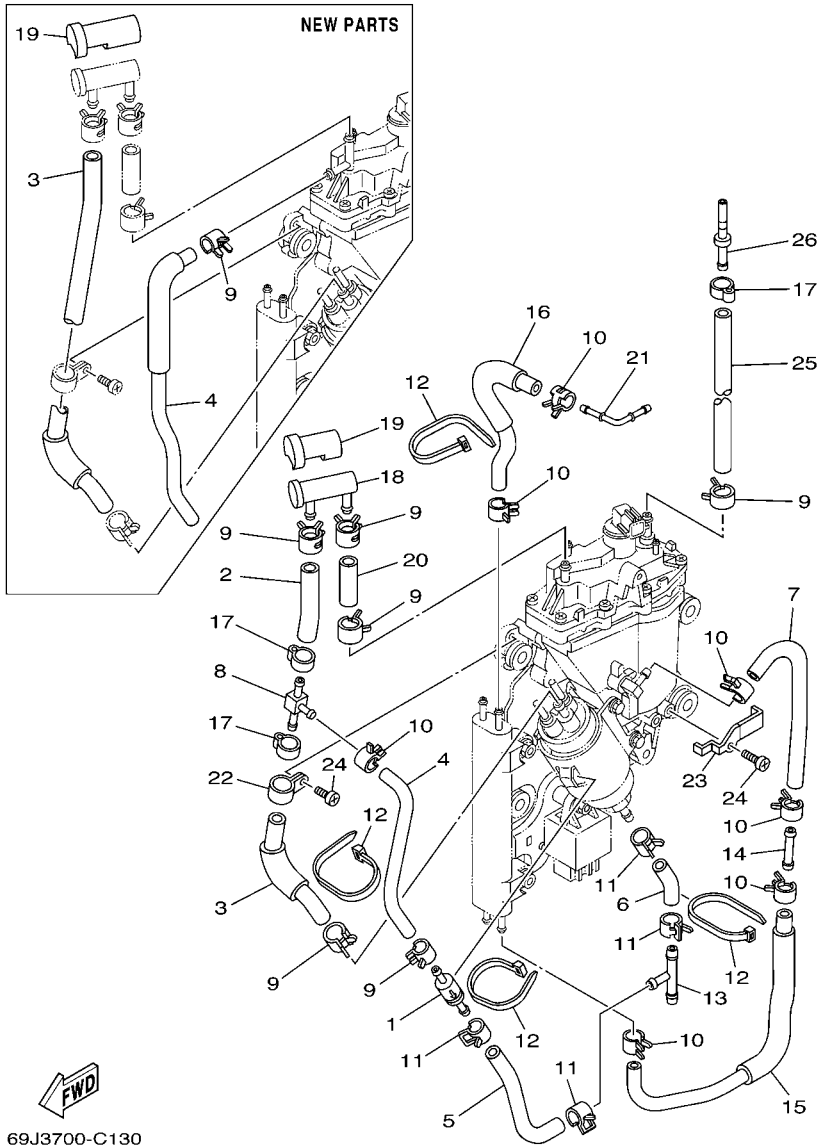

1: NEW PARTS
STARTING SERIAL NO. : 60L-1002933 ~ , 60M- 1000604 ~
69J-1010791 ~ , 69K- 1003796 ~

REF. NO.	PART NO. N° PIECES	DESCRIPTION DESCRIPTION	69J3	60L3	69K3	60M3		REMARKS REMARQUES
24	98582–05008	ELECTRONIC SIREN ASS'Y VIS, TETE TRONCONIQUE	2	2	2	2		
25	69J–13974–00	PIPE, FUEL 4 TUBE 4, CARBURANT	1	1	1	1		
26	69J–24381–00	SET BAR, FUEL JOINT BARRE DE BLOCAGE	1	1	1	1		

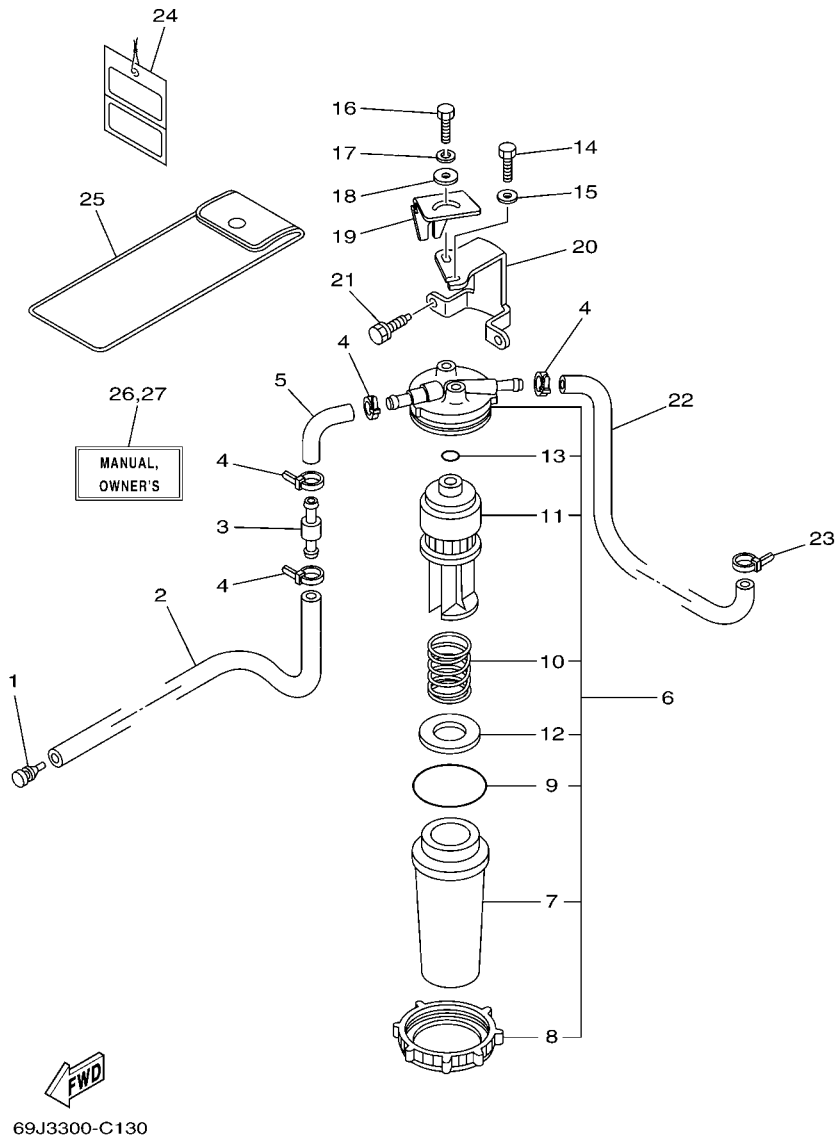

FIG. 14 FUEL 1 — CARBURANT 1

REF. NO.	PART NO. N° PIECES	DESCRIPTION DESCRIPTION	69J3	60L3	69K3	60M3		REMARKS REMARQUES
1	689–85547–00	DAMPER AMORTISSEUR	1	1	1	1		
2	90445–13004	HOSE DURITE	1	1	1	1		
3	6R3–24377–00	PIPE, JOINT 3 DURITE RACCORDEMENT 3	1	1	1	1		
4	90465–11M10	CLAMP BRIDE	4	4	4	4		
5	61A–24311–00	PIPE, FUEL 1 DURITE A ESSENCE	1	1	1	1		
6	65L–24560–00	FILTER ASSY ENS FILTRE	1	1	1	1		
7	61A–24521–00	.CUP, FILTER .CUVETTE, FILTRE	1	1	1	1		
8	65L–24531–01	.NUT .ECROU	1	1	1	1		
9	61A–24564–00	.O-RING .JOINT TORIQUE	1	1	1	1		
10	65L–24577–00	.SPRING .RESSORT	1	1	1	1		
11	65L–24563–00	.ELEMENT, FILTER .ELEMENT, FILTRE	1	1	1	1		
12	61A–24469–00	.FLOAT, WATER LEVEL .FLOTTEUR	1	1	1	1		
13	65L–24564–00	.O-RING .JOINT TORIQUE	1	1	1	1		
14	97095–06014	BOLT BOULON	1	1	1	1		
15	92995–06600	WASHER RONDELLE	1	1	1	1		
16	97095–06016	BOLT BOULON	1	1	1	1		
17	92995–06100	WASHER, SPRING RONDELLE, GROWER	1	1	1	1		
18	90201–06068	WASHER, PLATE RONDELLE, PLATE	1	1	1	1		
19	65L–24558–00	HOLDER, FILTER SUPPORT, FILTRE	1	1	1	1		
20	69J–24566–00	BRACKET, FILTER SUPPORT, FILTRE	1	1	1	1		
21	90119–06037	BOLT, WITH WASHER BOULON, AVEC RONDELLE	2	2	2	2		
22	69J–24313–00	PIPE 3 DURITE 3	1	1	1	1		
23	90465–11M10	CLAMP BRIDE	1	1	1	1		
24	61H–2819R–31	TAG, WARNING ETIQUETTE, AVERTISSEMENT	1	1	1	1		
25	69J–28100–01	TOOL KIT TROUSSE A OUTILS	1	1	1	1		AP AP
26	69J–28199–73–A0	MANUAL,OWNER'S MANUEL D'UTILISATION	1	1	1	1		UR (E,F,S) UR (E,F,S)
	69J–28199–73–B0	MANUAL,OWNER'S MANUEL D'UTILISATION	1	1	1	1		UR (D,NL,I) UR (D,NL,I)

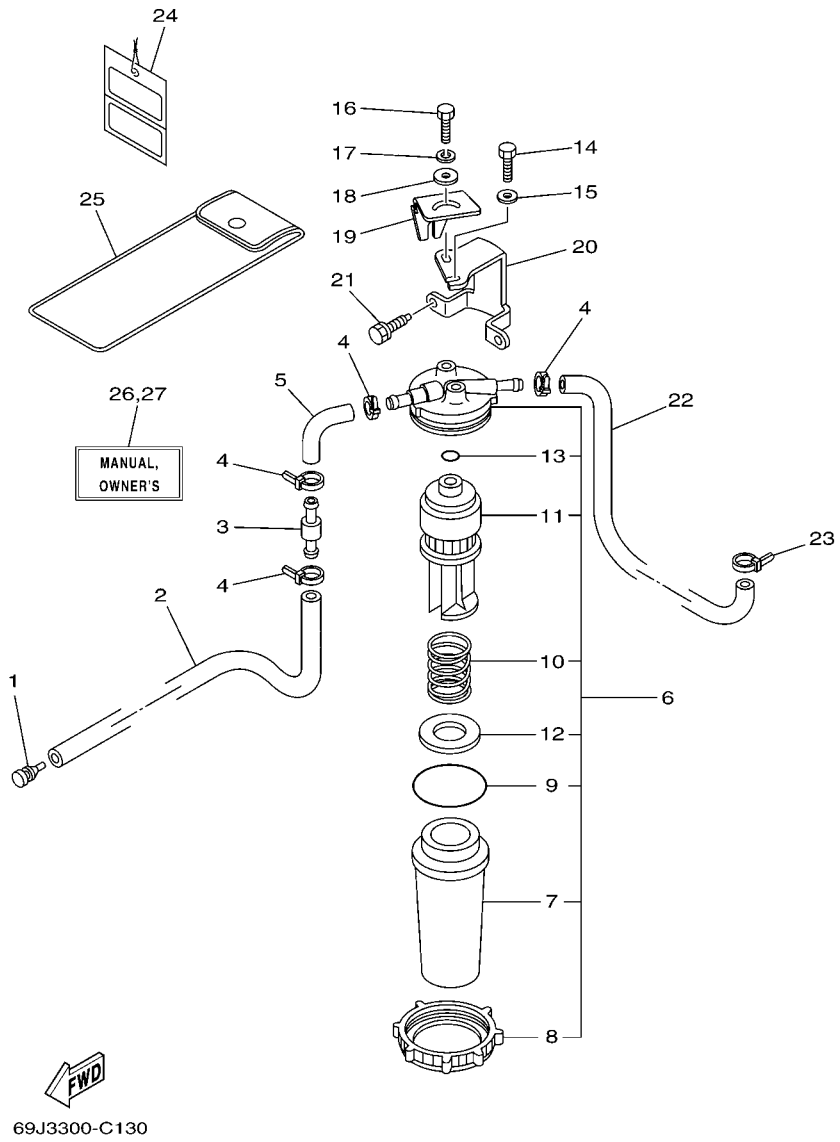

FIG. 14 FUEL 1 — CARBURANT 1

REF. NO.	PART NO. N° PIECES	DESCRIPTION DESCRIPTION	69J3	60L3	69K3	60M3		REMARKS REMARQUES
27	69J–28199–83–A0	MANUAL,OWNER'S MANUEL D'UTILISATION	1	1	1	1		UR (DK,P,GR) UR (DK,P,GR)
	69J–28199–83–B0	MANUAL,OWNER'S MANUEL D'UTILISATION	1	1	1	1		UR (N,S,SS) UR (N,S,SS)

FIG. 15 FUEL 2 — CARBURANT 2

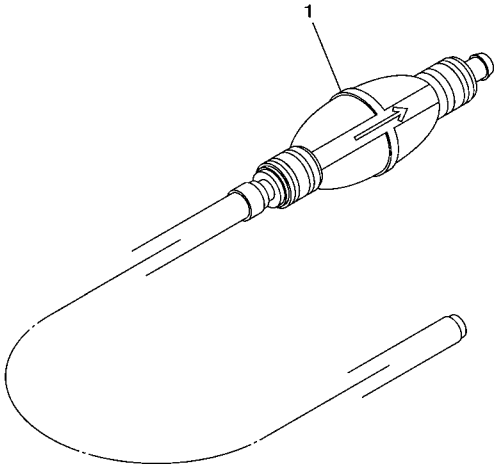

69J2300-3140

REF. NO.	PART NO. N° PIECES	DESCRIPTION DESCRIPTION	69J3	60L3	69K3	60M3		REMARKS REMARQUES
1	6YK–24307–42	FUEL PIPE COMP. 2 DURITE A ESSENCE 2	1	1	1	1		AP AP

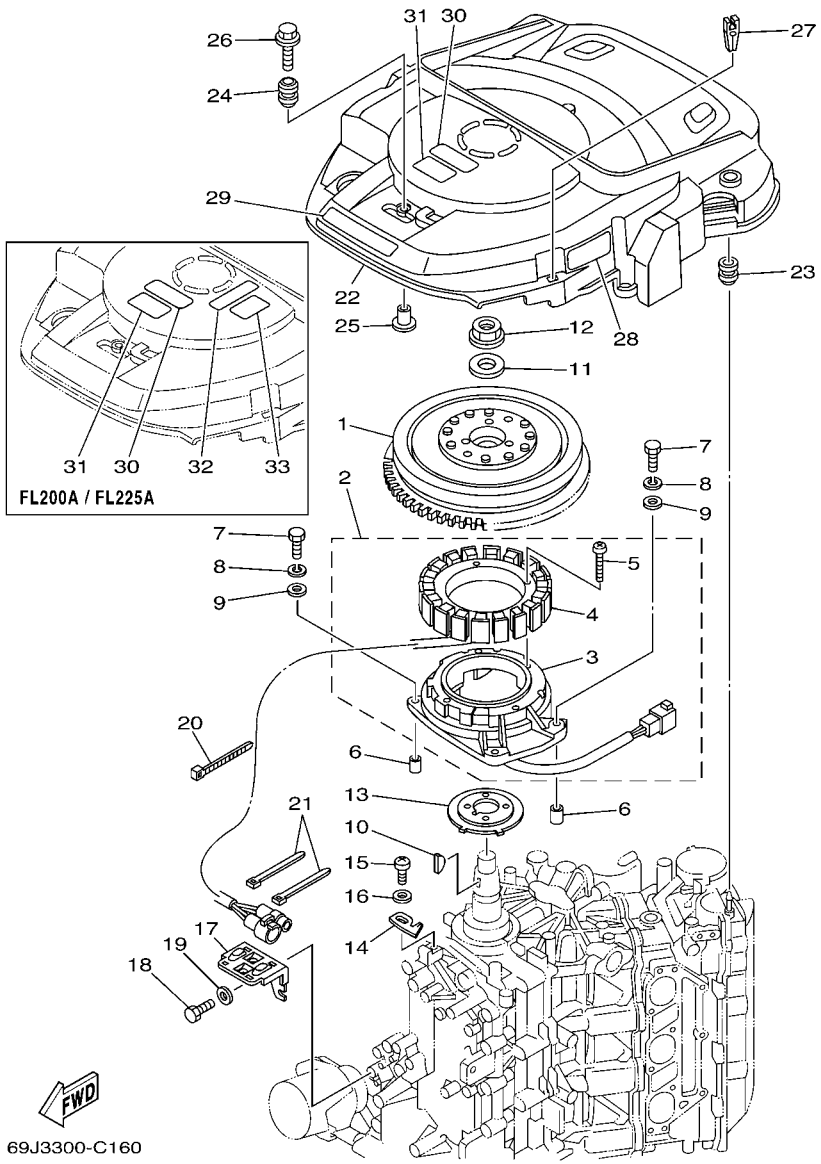

FIG. 16 GENERATOR GENERATRICE

REF. NO.	PART NO. N° PIECES	DESCRIPTION DESCRIPTION	69J3	60L3	69K3	60M3		REMARKS REMARQUES
1	69J–81450–10	ROTOR ASSY ROTOR COMPLET	1	1	1	1		
2	69J–81460–01	BASE ASSY ENS. FLASQUE	1	1	1	1		
3	69J–85580–00	.COIL, PULSER .BOBINE, PULSEUR	1	1	1	1		
4	69J–81410–01	.STATOR ASSY .STATOR COMPLET	1	1	1	1		
5	63D–81345–20	.SCREW, WITH WASHER (M6X30) .VIS, AVEC RONDELLE (M6X30)	4	4	4	4		
6	99530–08012	PIN, DOWEL GOUJON, D'ASSEMBLAGE	2	2	2	2		
7	97095–06035	BOLT BOULON	4	4	4	4		
8	92995–06100	WASHER, SPRING RONDELLE, GROWER	4	4	4	4		
9	92995–06600	WASHER RONDELLE	4	4	4	4		
10	90280–05015	KEY, WOODRUFF CLAVETTE, DEMI-LUNE	1	1	1	1		
11	90201–24014	WASHER, PLATE RONDELLE, PLATE	1	1	1	1		
12	90179–24002	NUT ECROU	1	1	1	1		
13	69J–81673–00	ROTOR ROTOR	1	1	1	1		
14	67F–81332–00	PLATE, TIMING PLATEAU, ALLUMAGE	1	1	1	1		
15	97885–06010	SCREW, PAN HEAD VIS, A ENCOCHE	1	1	1	1		
16	92995–06600	WASHER RONDELLE	1	1	1	1		
17	69J–8132G–00	PLATE PLAQUE	1	1	1	1		
18	97095–06016	BOLT BOULON	1	1	1	1		
19	92995–06600	WASHER RONDELLE	1	1	1	1		
20	90465–13M18	CLAMP BRIDE	1	1	1	1		
21	90465–14M66	CLAMP BRIDE	2	2	2	2		
22	69J–81337–00	COVER, FLYWHEEL COUVERCLE, VOLANT	1	1	1	1		
23	663–82317–01	DAMPER, IGNITION COIL AMORTISSEUR, BOBINE D'ALLUM	2	2	2	2		
24	6A0–82317–00	DAMPER, IGNITION COIL AMORTISSEUR, BOBINE D'ALLUM	3	3	3	3		
25	624–42542–00	PIPE TUYAU	3	3	3	3		
26	90119–06M59	BOLT, WITH WASHER BOULON, AVEC RONDELLE	3	3	3	3		
27	67F–2812A–00	PULLER, FUSE TENDEUR, FUSIBLE	1	1	1	1		

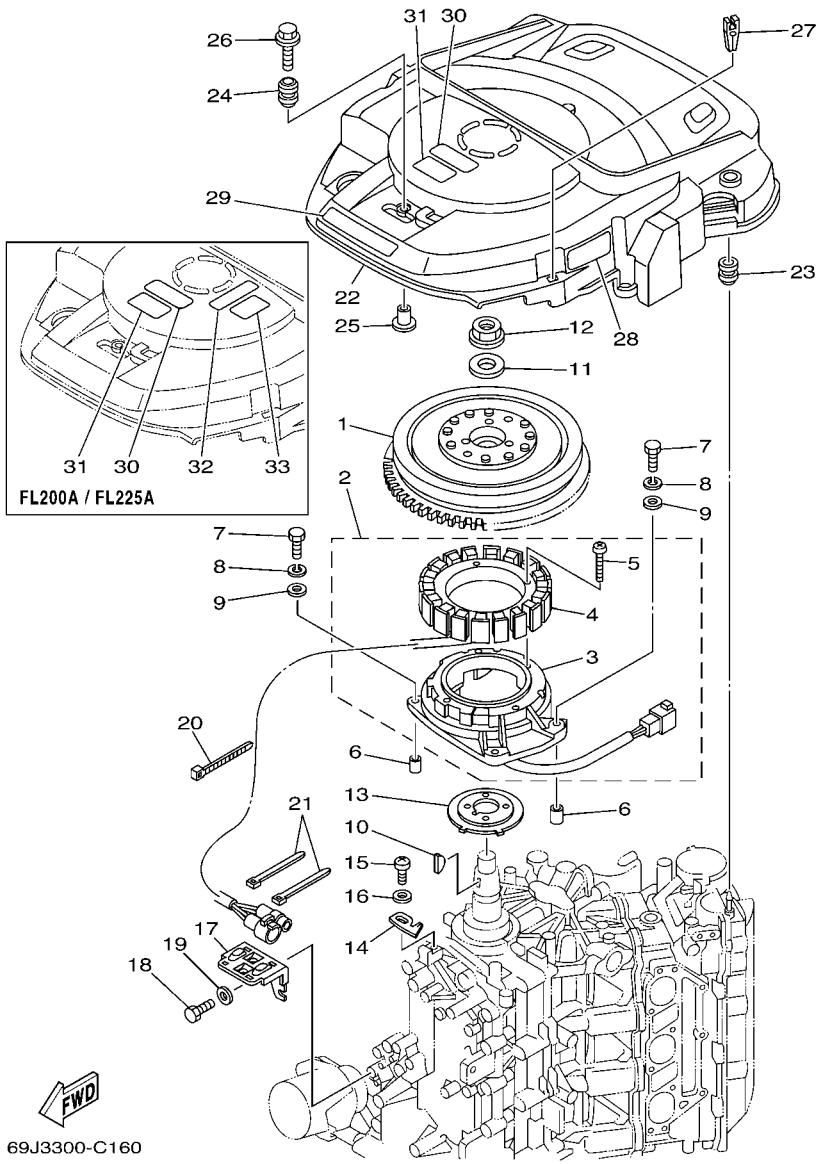

FIG. 16 GENERATOR GENERATRICE

REF. NO.	PART NO. N° PIECES	DESCRIPTION DESCRIPTION	69J3	60L3	69K3	60M3		REMARKS REMARQUES
28	69J–81919–20	GRAPHIC, REGULATOR ADHESIF, REGULATEUR	1	1	1	1		
29	69J–13437–61	MARK, CAUTION MAKER	1	1	1	1		
30	6A1–83625–41	MARK 5 ETIQUETTE 5	1	1	1	1		
31	6A1–83625–51	MARK 5 ETIQUETTE 5	1	1	1	1		
32	6K1–83623–41	MARK 3 ETIQUETTE 3			1	1		
33	6K1–83623–50	MARK 3 ETIQUETTE 3			1	1		

FIG. 17 ELECTRICAL 1 — PARTIE ELECTRIQUE 1

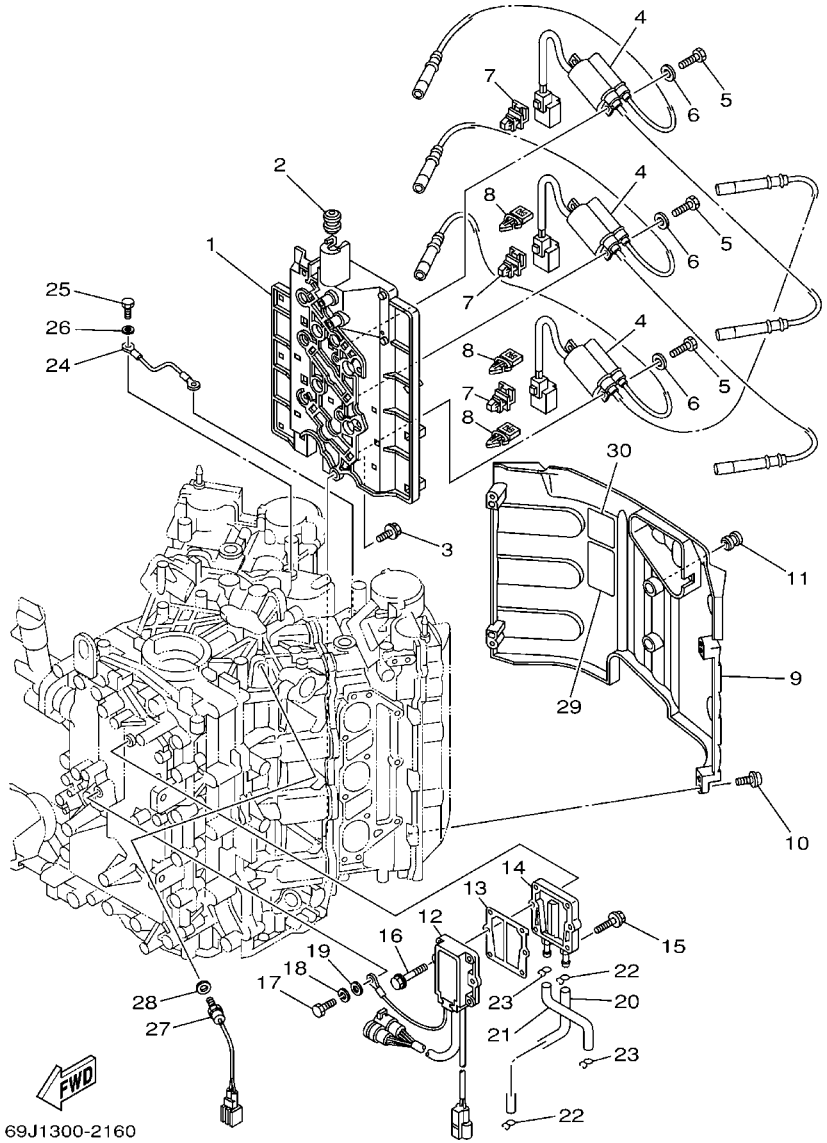

REF. NO.	PART NO. N° PIECES	DESCRIPTION DESCRIPTION	69J3	60L3	69K3	60M3		REMARKS REMARQUES
1	69J–82316–00	BRACKET, IGNITION COIL SUPPORT, BOBINE D'ALLUMAGE	1	1	1	1		
2	90480–09M21	GROMMET PASSE-FIL	1	1	1	1		
3	90119–06041	BOLT, WITH WASHER BOULON, AVEC RONDELLE	6	6	6	6		
4	69J–82310–00	IGNITION COIL ASSY BOBINE D'ALLUMAGE	3	3	3	3		
5	97095–06020	BOLT BOULON	6	6	6	6		
6	92995–06600	WASHER RONDELLE	6	6	6	6		
7	90464–12002	CLAMP BRIDE	3	3	3	3		
8	90464–07M56	CLAMP BRIDE	3	3	3	3		
9	69J–82314–00	COVER, IGNITION COIL COUVERCLE, BOBINE D'ALLUMAGE	1	1	1	1		
10	90110–06038	BOLT, HEXAGON SOCKET HEAD BOULON, TETE HEXAGONALE CREUSE	4	4	4	4		
11	663–82317–01	DAMPER, IGNITION COIL AMORTISSEUR, BOBINE D'ALLUM	2	2	2	2		
12	69J–81960–11	RECTIFIER & REGULATOR ASSY REDRESSEUR REGULATEUR CPLT	1	1	1	1		
13	69J–81975–A0	PLATE, RECTIFIER FITTING PLAQUE, FIXATION DU REDRESSEUR	1	1	1	1		
14	69J–81972–01–1S	COVER, RECTIFIER COUVERCLE, REDRESSEUR	1	1	1	1		
15	90119–06MA3	BOLT, WITH WASHER BOULON, AVEC RONDELLE	4	4	4	4		
16	90119–06MA5	BOLT, WITH WASHER BOULON, AVEC RONDELLE	2	2	2	2		
17	97095–06020	BOLT BOULON	1	1	1	1		
18	92995–06100	WASHER, SPRING RONDELLE, GROWER	1	1	1	1		
19	92995–06600	WASHER RONDELLE	1	1	1	1		
20	69J–12482–00	PIPE 2 DURITE 2	1	1	1	1		
21	69J–12481–00	PIPE 1 DURITE 1	1	1	1	1		
22	90467–09M03	CLIP JONC	2	2	2	2		
23	90467–08M18	CLIP JONC	2	2	2	2		
24	69J–82519–00	WIRE, EARTH LEAD FIL, MASSE	1	1	1	1		
25	97095–06012	BOLT BOULON	2	2	2	2		
26	92995–06600	WASHER RONDELLE	2	2	2	2		
27	61A–85790–00	THERMOSENSOR ASSY SENSITOMETRE	1	1	1	1		

FIG. 17 ELECTRICAL 1 PARTIE ELECTRIQUE 1

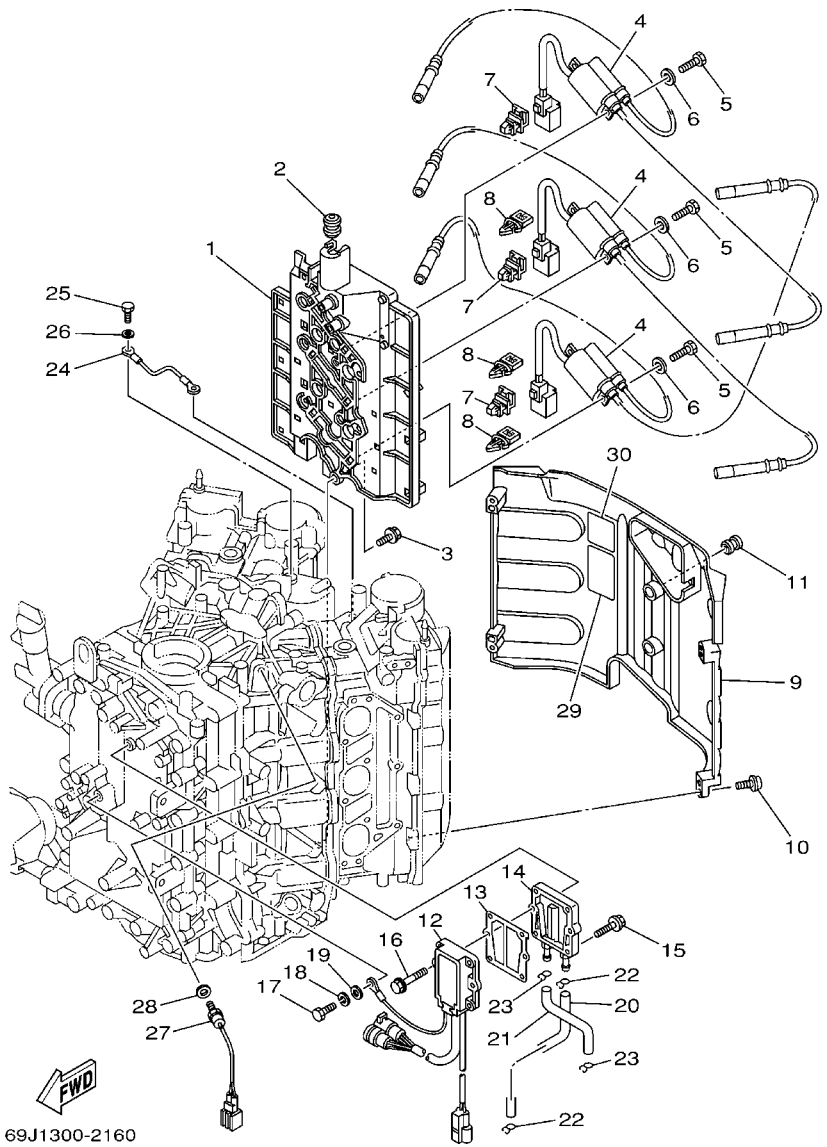

REF. NO.	PART NO. N° PIECES	DESCRIPTION DESCRIPTION	69J3	60L3	69K3	60M3		REMARKS REMARQUES
28	92990–10600	WASHER, PLATE RONDELLE, PLATE	1	1	1	1		
29	69J–83626–00	MARK 6 MARK 6	1	1	1	1		
30	67F–12138–60	MARK, CAUTION MAKER	1	1	1	1		

FIG. 18 ELECTRICAL 2 — PARTIE ELECTRIQUE 2

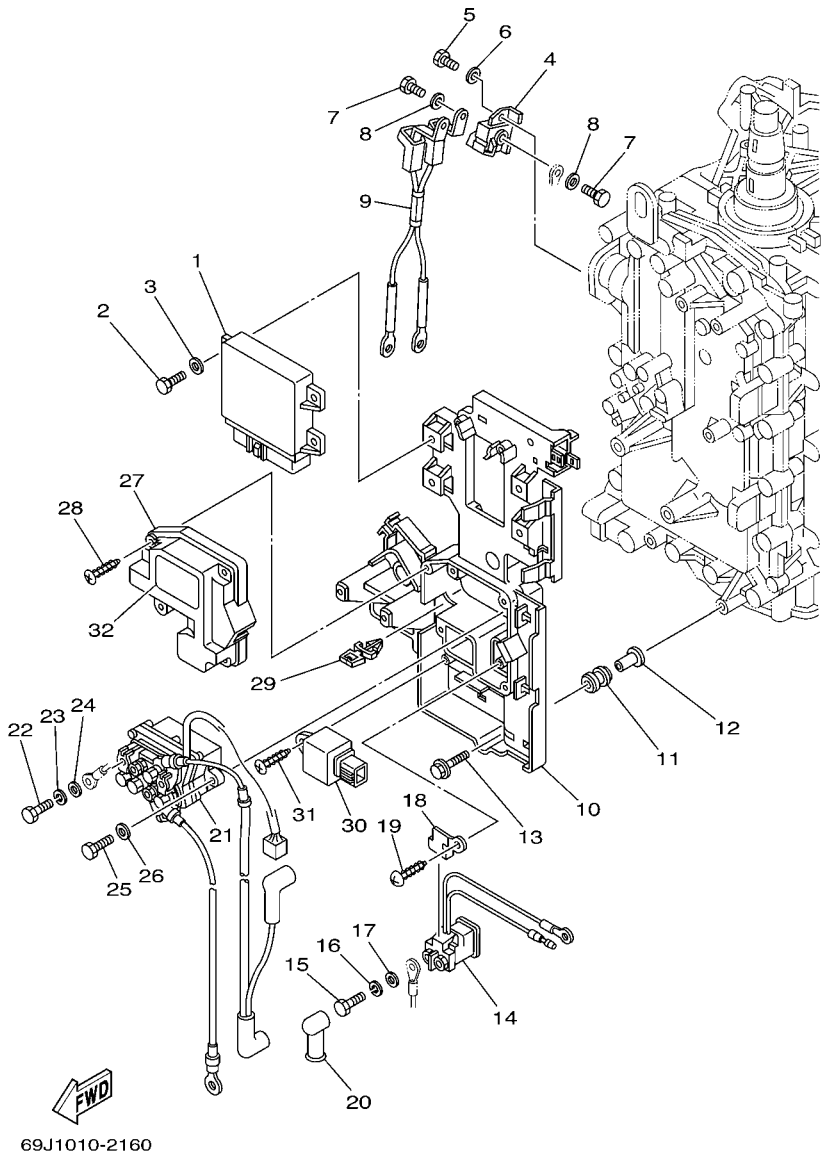

REF. NO.	PART NO. N° PIECES	DESCRIPTION DESCRIPTION	69J3	60L3	69K3	60M3		REMARKS REMARQUES
1	69J–8591A–03	ENGINE CONTROL UNIT ASSY BLOC DE CONTROL	1		1			
	60L–8591A–02	ENGINE CONTROL UNIT ASSY BLOC DE CONTROL		1		1		
2	97095–06016	BOLT BOULON	4	4	4	4		
3	92995–06600	WASHER RONDELLE	4	4	4	4		
4	69J–81925–00	TERMINAL BORNE	1	1	1	1		
5	97095–08020	BOLT BOULON	2	2	2	2		
6	92995–08600	WASHER RONDELLE	2	2	2	2		
7	97095–06014	BOLT BOULON	2	2	2	2		
8	92995–06600	WASHER RONDELLE	2	2	2	2		
9	69J–82105–00	WIRE HARNESS FAISCEAU DE FILS	1	1	1	1		
10	69J–81948–00	BRACKET JOINT TORIQUE	1	1	1	1		
11	6A0–82317–00	DAMPER, IGNITION COIL AMORTISSEUR, BOBINE D'ALLUM	6	6	6	6		
12	624–42542–00	PIPE TUYAU	6	6	6	6		
13	90119–06M59	BOLT, WITH WASHER BOULON, AVEC RONDELLE	6	6	6	6		
14	68V–8194A–00	RELAY RELAIS	1	1	1	1		
15	97095–06010	BOLT BOULON	2	2	2	2		
16	92995–06100	WASHER, SPRING RONDELLE, GROWER	2	2	2	2		
17	92995–06600	WASHER RONDELLE	2	2	2	2		
18	68V–81953–00	STAY, RELAY SUPPORT, RELAIS	1	1	1	1		
19	97780–60620	SCREW, TAPPING VIS, TETE BOMBEE	1	1	1	1		
20	6G5–82119–00	COVER, LEAD WIRE GARNITURE, FIL	1	1	1	1		
21	69J–81950–11	RELAY ASSY RELAIS COMPLET	1	1	1	1		
22	97095–06010	BOLT BOULON	2	2	2	2		
23	92995–06100	WASHER, SPRING RONDELLE, GROWER	2	2	2	2		
24	92995–06600	WASHER RONDELLE	2	2	2	2		
25	97013–06025	BOLT BOULON	2	2	2	2		
26	92903–06600	WASHER, PLATE RONDELLE, PLATE	2	2	2	2		

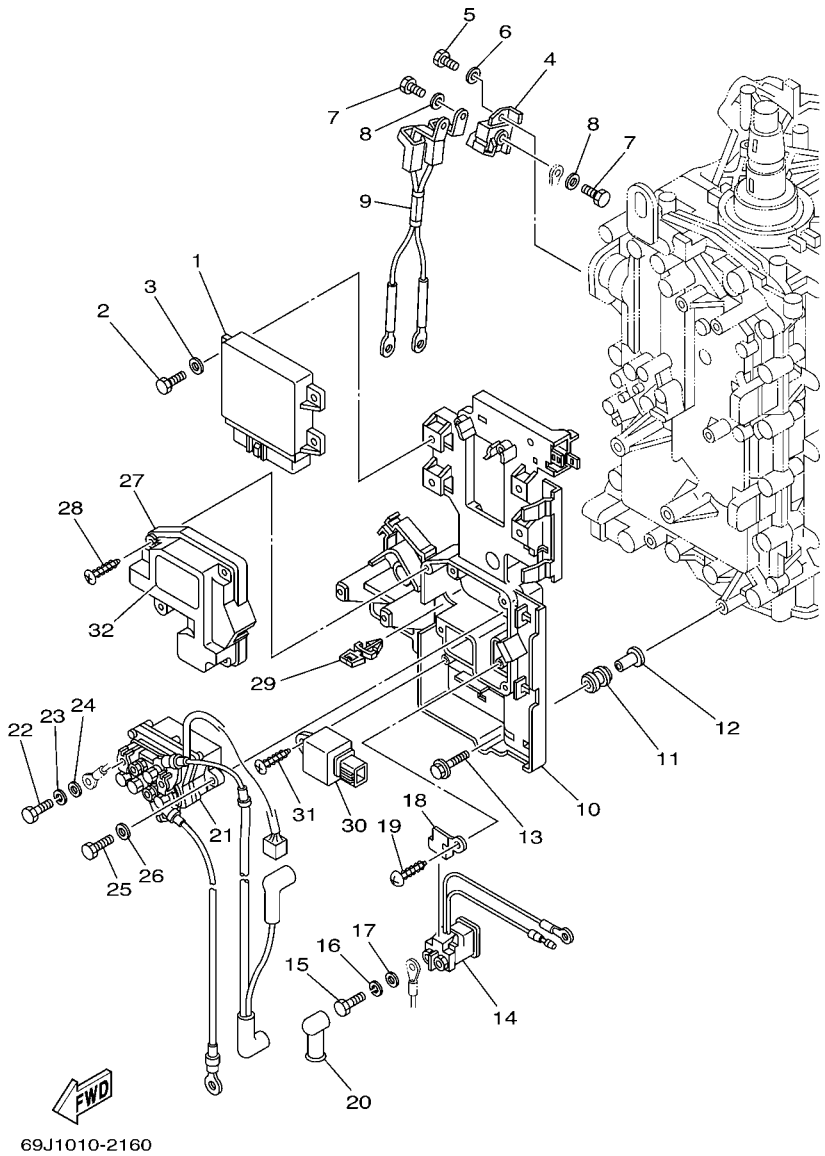

FIG. 18 ELECTRICAL 2 — PARTIE ELECTRIQUE 2

REF. NO.	PART NO. N° PIECES	DESCRIPTION DESCRIPTION	69J3	60L3	69K3	60M3		REMARKS REMARQUES
27	69J–81942–00	COVER COUVERCLE	1	1	1	1		
28	90169–05M00	SCREW, TRUSS HEAD TAPPING VIS, TETE FRAISEE	4	4	4	4		
29	90464–07M56	CLAMP BRIDE	2	2	2	2		
30	68V–81950–00	RELAY ASSY RELAIS COMPLET	1	1	1	1		
31	97780–60625	SCREW, TAPPING VIS, TETE BOMBEE	1	1	1	1		
32	69J–81919–00	GRAPHIC, REGULATOR ADHESIF, REGULATEUR	1	1	1	1		

FIG. 19 ELECTRICAL 3 — PARTIE ELECTRIQUE 3

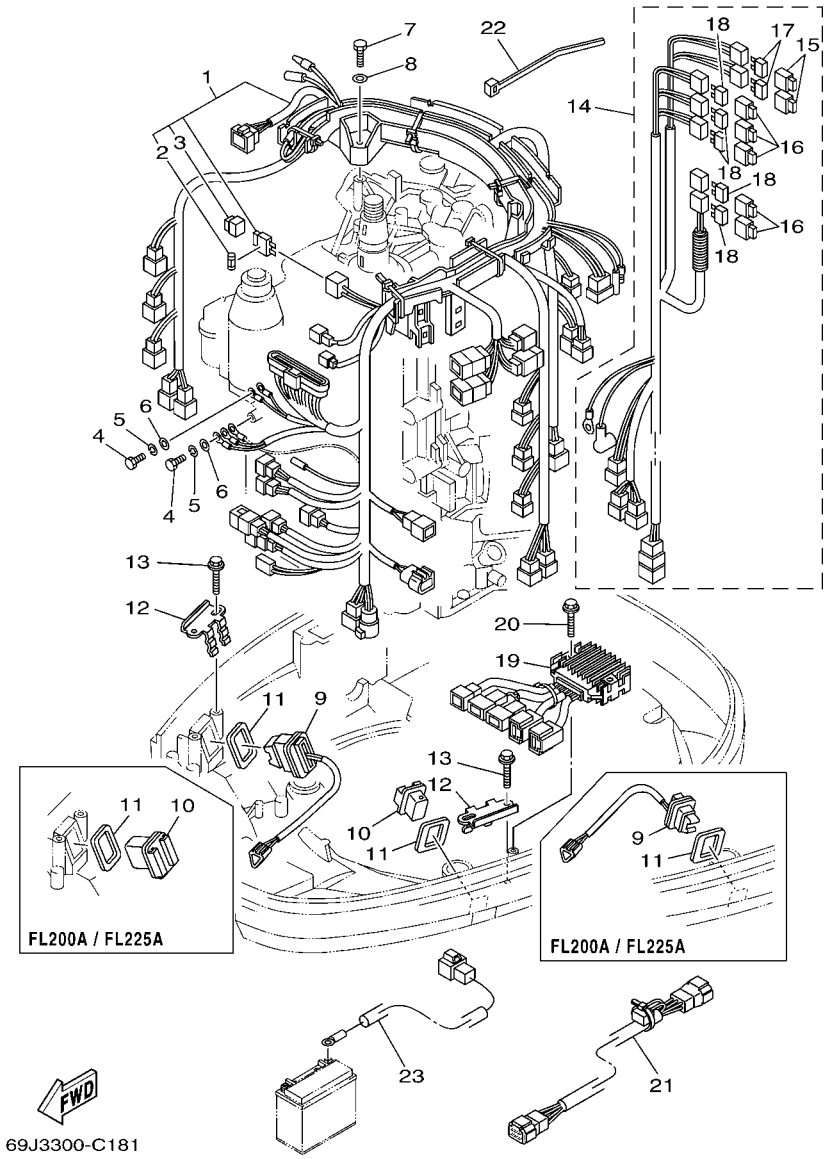

REF. NO.	PART NO. N° PIECES	DESCRIPTION DESCRIPTION	69J3	60L3	69K3	60M3		REMARKS REMARQUES
1	69J–82590–20	WIRE HARNESS ASSY FAISCEAU DE FILS COMPLET	1	1	1	1		
2	67F–82151–20	.FUSE (5A) .FUSIBLE (5A)	2	2	2	2		
3	69J–8215B–00	.CAP (BROWN) .BOUCHON (BRUN)	1	1	1	1		
4	97095–06020	BOLT BOULON	2	2	2	2		
5	92995–06100	WASHER, SPRING RONDELLE, GROWER	2	2	2	2		
6	92995–06600	WASHER RONDELLE	2	2	2	2		
7	97095–06035	BOLT BOULON	3	3	3	3		
8	92995–06600	WASHER RONDELLE	3	3	3	3		
9	69J–82563–00	TRIM & TILT SWITCH ASSY INCLINER ET PARER COMMUTATEUR	1	1	1	1		
10	69J–42723–00–8D	COVER, BOTTOM COUVERCLE	1	1	1	1		
11	69J–82587–00	GASKET JOINT	2	2	2	2		
12	69J–83614–00	BRACKET SUPPORT	2	2	2	2		
13	90109–06M86	BOLT BOULON	4	4	4	4		
14	69J–8259N–10	WIRE HARNESS ASSY 3 FAISCEAU DE FILS	1	1	1	1		
15	67F–8215B–10	.CAP (YELLOW) .BOUCHON (YELLOW)	2	2	2	2		
16	67F–8215B–20	.CAP (GREEN) .BOUCHON (GREEN)	5	5	5	5		
17	67F–82151–00	.FUSE (20A) .FUSIBLE (20A)	4	4	4	4		
18	67F–82151–10	.FUSE (30A) .FUSIBLE (30A)	10	10	10	10		
19	69J–83306–01	DRIVE UNIT ASSY UNITE DE PROMENADE	1	1	1	1		
20	90109–06M82	BOLT BOULON	2	2	2	2		
21	69J–81315–00	LEAD WIRE ASSY FIL	1	1	1	1		
22	90465–13M18	CLAMP BRIDE	6	6	6	6		
23	69J–81949–00	WIRE, LEAD (ISOLATOR CABLE) FIL (ISOLATOR CABLE)	1	1	1	1		AP AP

FIG. 20 STARTING MOTOR DEMARREUR ELECTRIQUE

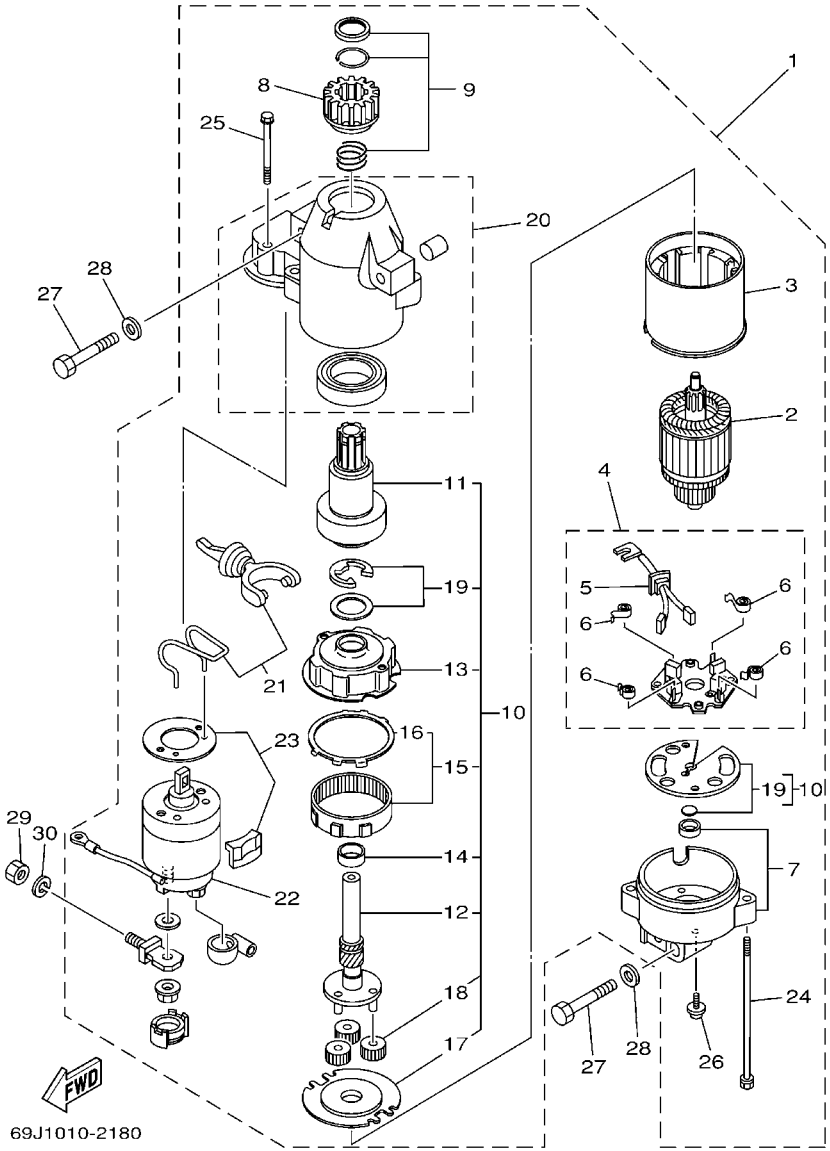

REF. NO.	PART NO. N° PIECES	DESCRIPTION DESCRIPTION	69J3	60L3	69K3	60M3		REMARKS REMARQUES
1	69J–81800–00	STARTING MOTOR ASSY DEMARREUR ELECTRIQUE COMPLET	1	1	1	1		
2	67F–81850–00	.ARMATURE ASSY .INDUIT	1	1	1	1		
3	67F–81810–00	.STATOR ASSY .STATOR COMPLET	1	1	1	1		
4	69J–81840–00	.BRUSH HOLDER ASSY .SUPPORT DE CHARBON	1	1	1	1		
5	69J–81801–00	..BRUSH SET ..CHARBON	1	1	1	1		
6	67F–81813–00	..SPRING, BRUSH ..RESSORT, DE CHARBON	4	4	4	4		
7	68F–81820–00	.REAR BRACKET ASSY .SUPPORT ARRIERE COMPLET	1	1	1	1		
8	67F–81808–00	.PINION ASSY .PIGNON	1	1	1	1		
9	67F–81857–00	.PINION STOPPER SET .BUTEE PIGNON	1	1	1	1		
10	67F–81807–00	.GEAR ASSY, STARTING MOTOR .PIGNON, DEMARREUR ELECTRIQUE	1	1	1	1		
11	67F–81832–00	..CLUTCH, OVER RUN ..EMBRAYAGE, ROUE LIBRE	1	1	1	1		
12	67F–81836–00	..SHAFT, PINION ..AXE, PIGNON	1	1	1	1		
13	67F–81821–00	..BRACKET, CENTER 1 ..SUPPORT, CENTRE 1	1	1	1	1		
14	67F–81841–00	..BEARING ..ROULEMENT	1	1	1	1		
15	67F–81891–00	..GEAR, RING ..ROUE DENTEE	1	1	1	1		
16	67F–8183R–00	...GASKET ...JOINT	1	1	1	1		
17	67F–81830–00	..BRACKET, CENTER 2 ..SUPPORT, CENTRE 2	1	1	1	1		
18	67F–8183T–00	..GEAR, IDLER ..PIGNON, INTERMEDIAIRE	3	3	3	3		
19	67F–81809–00	..WASHER KIT ..JEU DE RONDELLES	1	1	1	1		
20	69J–81842–00	.COVER .COUVERCLE	1	1	1	1		
21	69J–81839–00	.LEVER ASSY .LEVIER COMPLET	1	1	1	1		
22	69J–81941–00	.STARTER RELAY ASSY .LANCEUR RELAIS (ENS.)	1	1	1	1		
23	69J–81869–00	.COVER, DUST .COUVERCLE, POUSSIERE	1	1	1	1		
24	6K7–81826–10	.BOLT .BOULON	2	2	2	2		
25	69J–81828–00	.BOLT 2 .RONDELLE, BUTEE 2	2	2	2	2		
26	67F–81846–00	.SCREW .VIS	2	2	2	2		
27	97013–08045	BOLT BOULON	3	3	3	3		

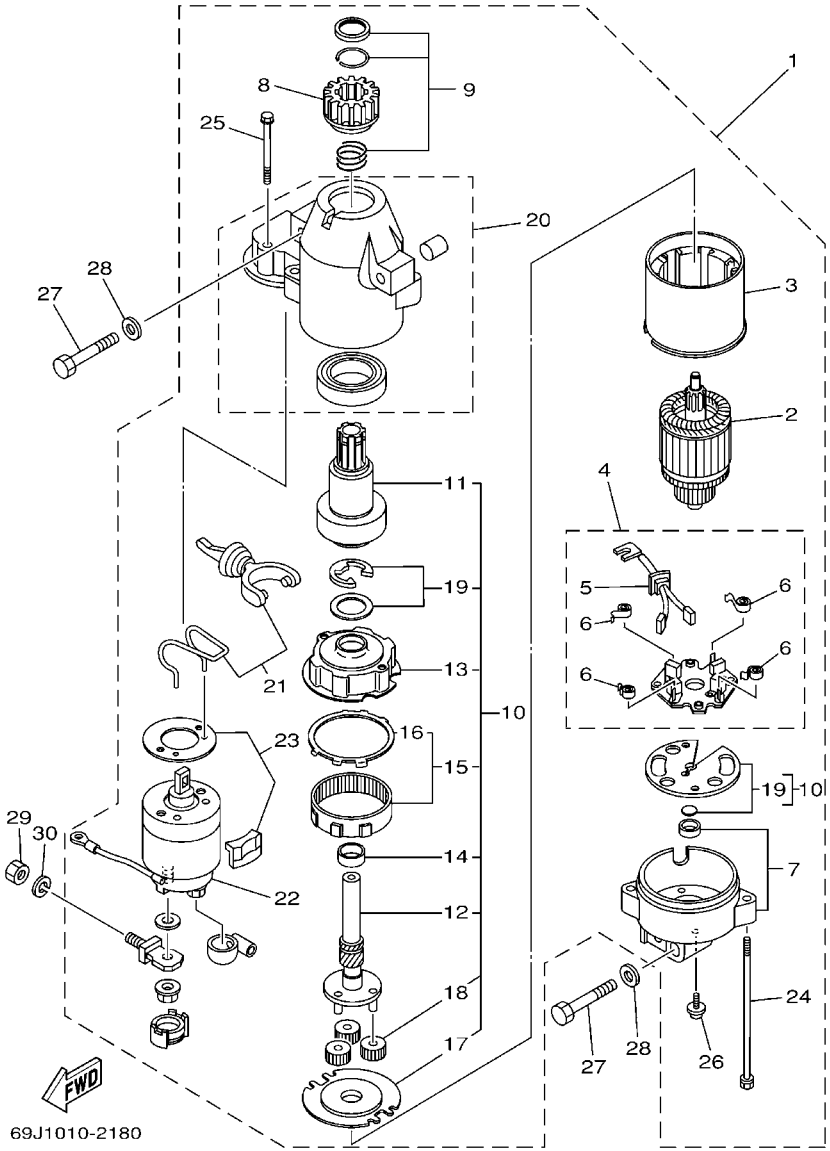

FIG. 20 STARTING MOTOR DEMARREUR ELECTRIQUE

REF. NO.	PART NO. N° PIECES	DESCRIPTION DESCRIPTION	69J3	60L3	69K3	60M3		REMARKS REMARQUES
28	92903–08600	WASHER, PLATE RONDELLE, PLATE	3	3	3	3		
29	95333–08600	NUT ECROU	1	1	1	1		
30	92903–08100	WASHER, SPRING RONDELLE, GROWER	1	1	1	1		

FIG. 21 BOTTOM COWLING 1 CAPOT INFERIEUR 1

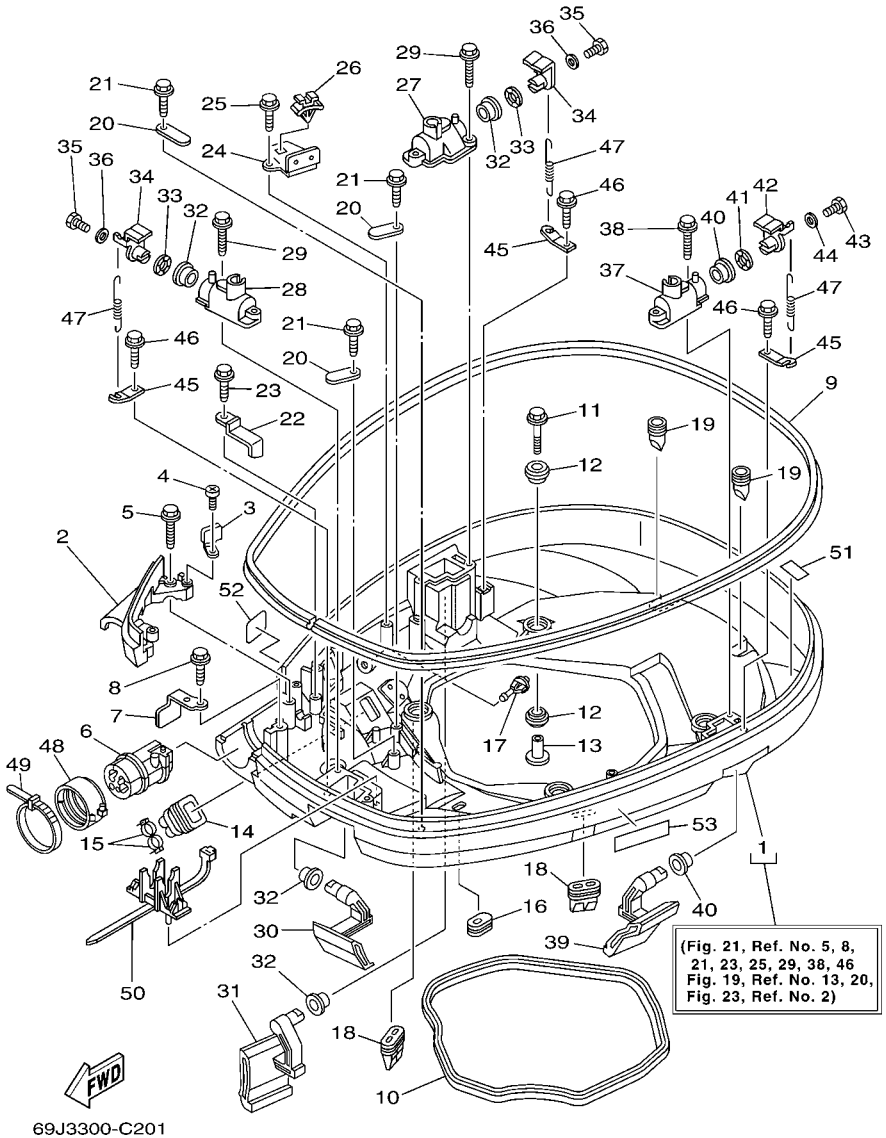

1: NEW PARTS
STARTING SERIAL NO. : 60L-1002933 ~ , 60M- 1000604 ~
69J-1010791 ~ , 69K- 1003796 ~

REF. NO.	PART NO. N° PIECES	DESCRIPTION DESCRIPTION	69J3	60L3	69K3	60M3		REMARKS REMARQUES
1	69J–42710–01–8D	BOTTOM COWLING ASSY ENS. EMBASE	1	1	1	1		
2	69J–42738–01–5B	PLATE, FITTING ETRIER	1	1	1	1		
3	69J–42744–10	STAY SUPPORT	1	1	1	1		
4	97885–06010	SCREW, PAN HEAD VIS, A ENCOCHE	1	1	1	1		
5	90109–06M82	BOLT BOULON	2	2	2	2		
6	69J–42725–01	GROMMET PASSE-FIL	1	1	1	1		
7	64D–42738–10–5B	PLATE, FITTING ETRIER	1	1	1	1		
8	90109–06M82	BOLT BOULON	1	1	1	1		
9	69J–42615–00	SEAL JOINT	1	1	1	1		
10	69J–42716–00	RUBBER, SEAL 1 JOINT EN CAOUTCHOUC 1	1	1	1	1		
11	90119–08M22	BOLT, WITH WASHER BOULON, AVEC RONDELLE	4	4	4	4		
12	90480–22M81	GROMMET PASSE-FIL	8	8	8	8		
13	90387–08M37	COLLAR COLLERETTE	4	4	4	4		
14	6H1–42726–21	GROMMET PASSE-FIL	1	1	1	1		
15	90465–11M10	CLAMP BRIDE	2	2	2	2		
16	61A–42727–00	GROMMET PASSE-FIL	1	1	1	1		
17	69J–44391–00	NIPPLE, HOSE RACCORD D'ESSENCE	1	1	1	1		
18	69J–42717–00	RUBBER, SEAL 2 JOINT EN CAOUTCHOUC 2	2	2	2	2		
19	61A–42717–00	RUBBER, SEAL 2 JOINT EN CAOUTCHOUC 2	2	2	2	2		
20	6E5–82588–00	PLATE PLAQUE	3	3	3	3		
21	90109–06M81	BOLT BOULON	3	3	3	3		
22	90462–20001	CLAMP BRIDE	1	1	1	1		
23	90109–06M86	BOLT BOULON	1	1	1	1		
24	69J–82554–00	STAY, NEUTRAL SWITCH SUPPORT, CONT DE POINT-MORT	1	1	1	1		
25	90109–06M86	BOLT BOULON	1	1	1	1		
26	90464–09M47	CLAMP BRIDE	1	1	1	1		
27	68F–42828–00–5B	PLATE, CLAMP PLAQUE, PRESSE	1	1	1	1		

FIG. 21 BOTTOM COWLING 1 CAPOT INFERIEUR 1

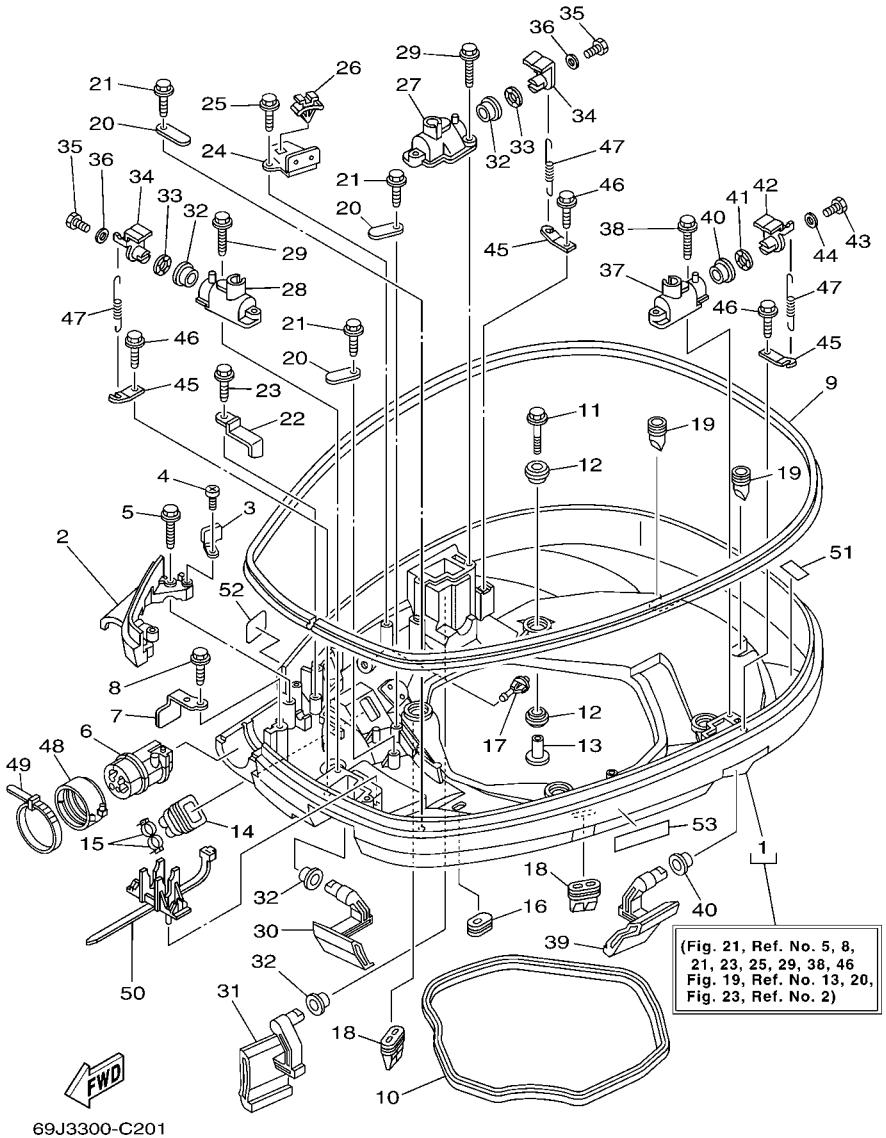

1: NEW PARTS
STARTING SERIAL NO. : 60L-1002933 ~ , 60M- 1000604 ~
69J-1010791 ~ , 69K- 1003796 ~

REF. NO.	PART NO. N° PIECES	DESCRIPTION DESCRIPTION	69J3	60L3	69K3	60M3		REMARKS REMARQUES
28	69J–42828–00–5B	PLATE, CLAMP PLAQUE, PRESSE	1	1	1	1		
29	90109–06M82	BOLT BOULON	4	4	4	4		
30	69J–42815–00–8D	LEVER, CLAMP LEVIER, PRESSE	1	1	1	1		
31	69J–42817–00–8D	LEVER, CLAMP LEVIER, PRESSE	1	1	1	1		
32	90386–15M73	BUSH DOUILLE	4	4	4	4		
33	90206–15M18	WASHER, WAVE RONDELLE, ONDULEE	2	2	2	2		
34	68F–42818–00	LEVER, CLAMP LEVIER, PRESSE	2	2	2	2		
35	97095–06020	BOLT BOULON	2	2	2	2		
36	90201–06068	WASHER, PLATE RONDELLE, PLATE	2	2	2	2		
37	68F–42828–10–5B	PLATE, CLAMP PLAQUE, PRESSE	1	1	1	1		
	69J–42828–10–94	PLATE, CLAMP PLAQUE, PRESSE	1	1	1	1		NEW PARTS *1 NEW PARTS *1
38	90109–06M82	BOLT BOULON	2	2	2	2		
39	69J–42816–00–8D	LEVER, CLAMP LEVIER, PRESSE	1	1	1	1		
40	90386–15M73	BUSH DOUILLE	2	2	2	2		
41	90206–15M18	WASHER, WAVE RONDELLE, ONDULEE	1	1	1	1		
42	67F–42818–00	LEVER, CLAMP LEVIER, PRESSE	1	1	1	1		
43	97095–06020	BOLT BOULON	1	1	1	1		
44	90201–06068	WASHER, PLATE RONDELLE, PLATE	1	1	1	1		
45	64D–43144–00	HOOK, SPRING CROCHET	3	3	3	3		
46	90109–06M86	BOLT BOULON	3	3	3	3		
47	90506–16M34	SPRING, TENSION RESSORT, TENSION	3	3	3	3		
48	68F–42753–00	FASTNER ATTACHE	1	1	1	1		AP AP
49	90464–20258	CLAMP BRIDE	1	1	1	1		AP AP
50	68V–82594–00	CLAMP BRIDE	1	1	1	1		
51	67F–82377–00	LABEL ETIQUETTE	1	1	1	1		
52	6A1–28176–00	LABEL, CAUTION ETIQUETTE, RECOMMANDATION	1	1	1	1		
53	6E3–8257H–00	PLATE, MARK PLAQUE, ADHESIF	1	1	1	1		

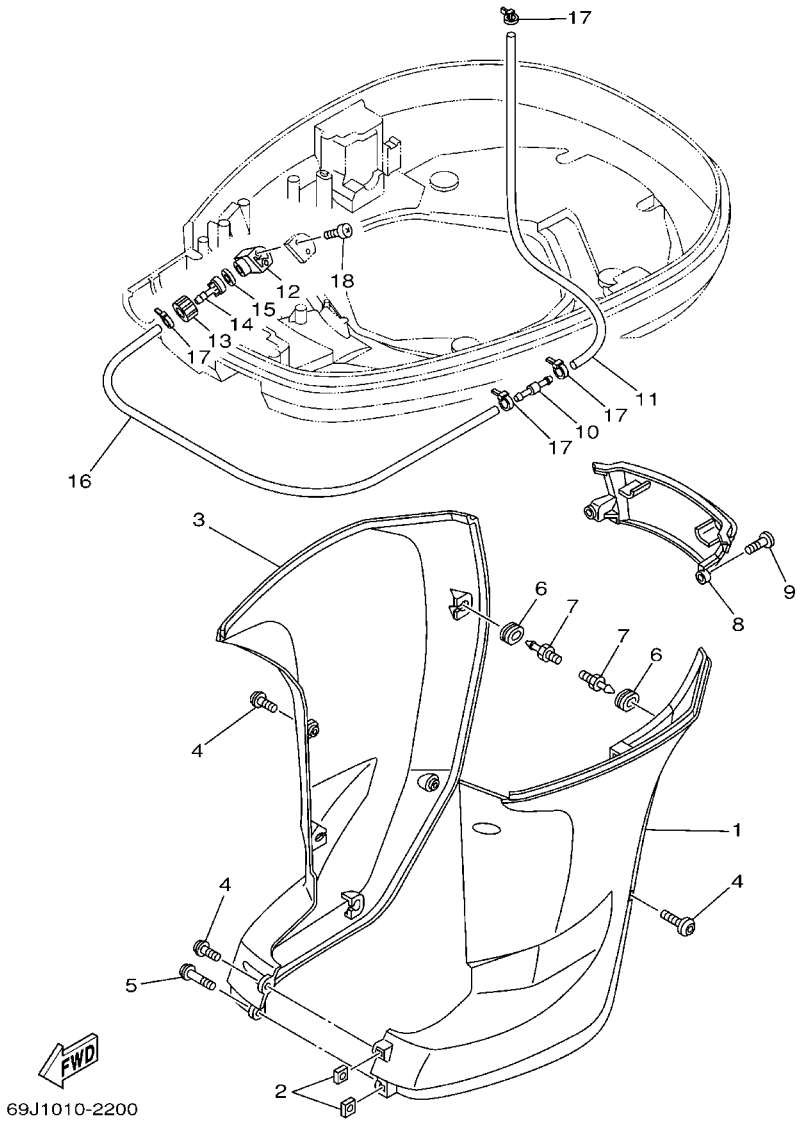

FIG. 22 BOTTOM COWLING 2 — CAPOT INFERIEUR 2

REF. NO.	PART NO. N° PIECES	DESCRIPTION DESCRIPTION	69J3	60L3	69K3	60M3		REMARKS REMARQUES
1	69J–42741–00–8D	APRON CAPOT LATERAL	1	1	1	1		
2	90173–06001	NUT, SQUARE ECROU, CARRE	2	2	2	2		
3	69J–42771–00–8D	APRON CAPOT LATERAL	1	1	1	1		
4	90111–06025	BOLT BOULON	5	5	5	5		
5	90111–06026	BOLT BOULON	1	1	1	1		
6	90480–14M17	GROMMET PASSE-FIL	6	6	6	6		
7	69J–42774–00	STAY, APRON 1 COUSSINET	6	6	6	6		
8	69J–45151–00–8D	COVER, UPPER CASING CAPUCHON, FOURREAU	1	1	1	1		
9	90111–06025	BOLT BOULON	2	2	2	2		
10	6E5–24379–00	PIPE, JOINT 4 DURITE RACCORDEMENT 4	1	1	1	1		
11	90445–11012	HOSE (L600) DURITE (L600)	1	1	1	1		
12	68T–12572–00	ADAPTER ADAPTATEUR	1	1	1	1		
13	6R3–12581–00	JOINT, HOSE 1 JOINT DE TUYAU	1	1	1	1		
14	6R3–12582–00	JOINT, HOSE 2 RACCORD DE TUYAU 1	1	1	1	1		
15	6R3–12583–00	GASKET, HOSE JOINT JOINT	1	1	1	1		
16	90445–11028	HOSE DURITE	1	1	1	1		
17	90465–11M10	CLAMP BRIDE	4	4	4	4		
18	97780–60520	SCREW, TAPPING VIS, TETE BOMBEE	2	2	2	2		

FIG. 23 CONTROL 1 COMMANDE 1

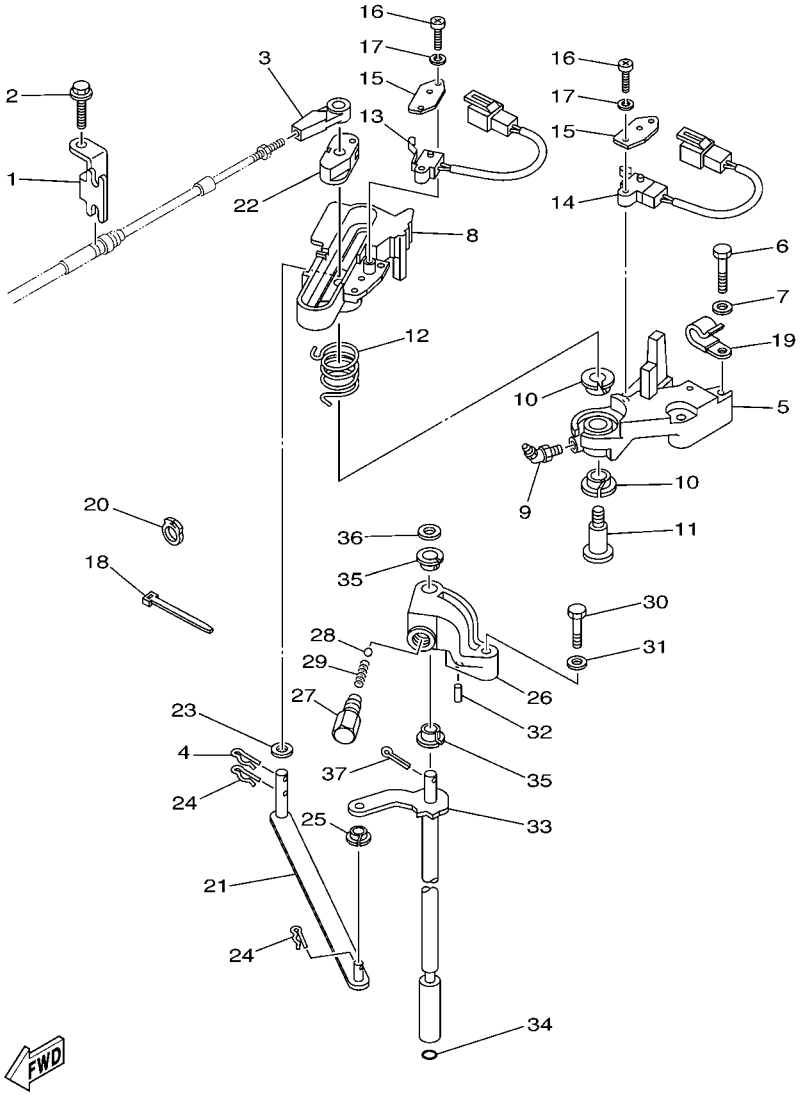

69J3100-C230

REF. NO.	PART NO. N° PIECES	DESCRIPTION DESCRIPTION	69J3	60L3	69K3	60M3		REMARKS REMARQUES
1	69J–48531–00	BRACKET, REMOTE CONTROL 1 ETRIER 1, COMMANDE A DISTANCE	1	1	1	1		
2	90109–06M86	BOLT BOULON	1	1	1	1		
3	6E5–48344–00	CABLE END, REMOTE CONTROL CHAPE CABLE	1	1	1	1		
4	90468–18008	CLIP JONC	1	1	1	1		
5	69J–44117–00–1S	BRACKET SUPPORT	1	1	1	1		
6	97095–06035	BOLT BOULON	2	2	2	2		
7	92995–06600	WASHER RONDELLE	2	2	2	2		
8	69J–44176–01–1S	BRACKET SUPPORT	1	1	1	1		
9	93700–06M01	NIPPLE, GREASE PION	1	1	1	1		
10	90386–12069	BUSH DOUILLE	2	2	2	2		
11	90109–08019	BOLT BOULON	1	1	1	1		
12	90508–20020	SPRING, TORSION RESSORT, TORSION	1	1	1	1		
13	68F–8259F–00	SWITCH ASSY COMMUTATEUR	1	1	1	1		
14	69J–8259F–00	SWITCH ASSY COMMUTATEUR	1	1	1	1		
15	61A–82588–01	PLATE PLAQUE	2	2	2	2		
16	97885–04016	SCREW, PAN HEAD VIS, A ENCOCHE	4	4	4	4		
17	92995–04100	WASHER RONDELLE	4	4	4	4		
18	90465–11M10	CLAMP BRIDE	1	1	1	1		
19	90465–06M86	CLAMP BRIDE	1	1	1	1		
20	90464–09010	CLAMP BRIDE	1	1	1	1		
21	69J–44121–00	LEVER, SHIFT ROD LEVIER, TIGE D'INVERSION	1	1	1	1		
22	69J–44122–00	BUSHING, SHIFT ROD LEVER DOUILLE, LEVIER D'EMBRAYAGE	1	1	1	1		
23	90202–08M20	WASHER, PLATE RONDELLE, PLATE	1	1	1	1		
24	90468–18008	CLIP JONC	2	2	2	2		
25	90386–06M12	BUSH DOUILLE	1	1	1	1		
26	69J–44118–00	BRACKET SUPPORT	1	1	1	1		
27	648–42715–00	BUSHING COUSSINET	1	1	1	1		

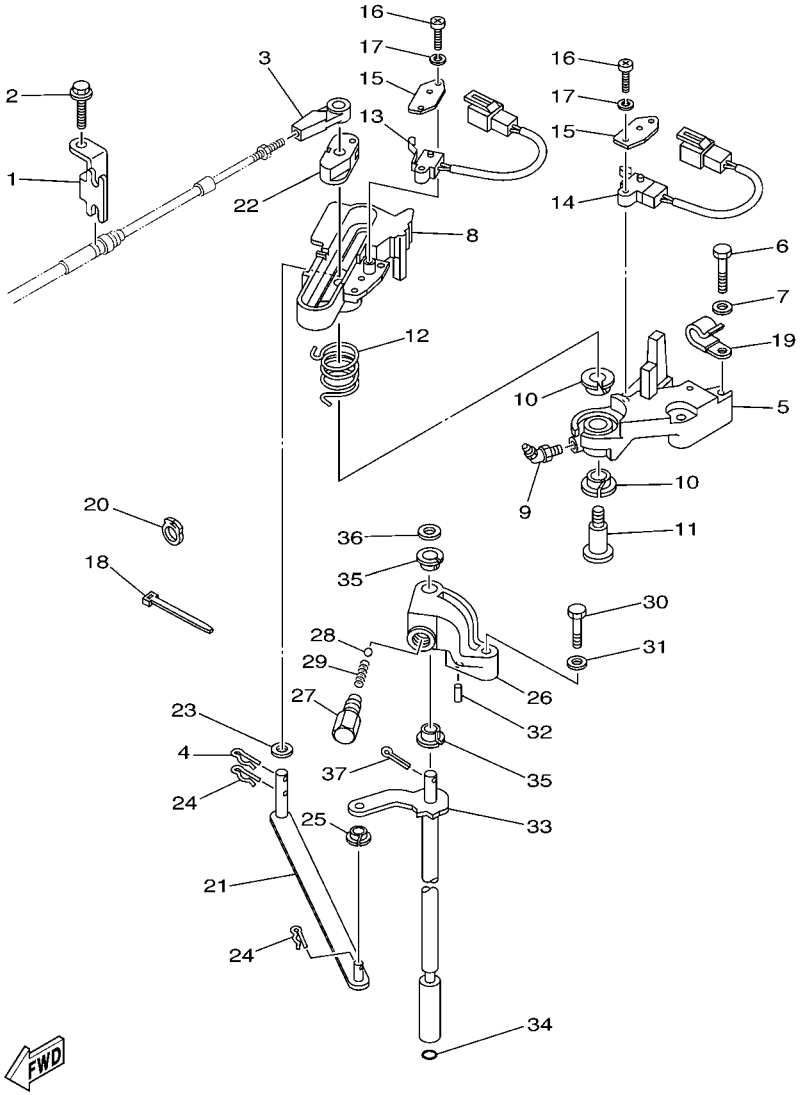

FIG. 23 CONTROL 1 COMMANDE 1

REF. NO.	PART NO. N° PIECES	DESCRIPTION DESCRIPTION	69J3	60L3	69K3	60M3		REMARKS REMARQUES
28	93501–04M02	BALL BILLE	1	1	1	1		
29	90501–12082	SPRING, COMPRESSION RESSORT, COMPRESSION	1	1	1	1		
30	97075–06030	BOLT BOULON	1	1	1	1		
31	92995–06600	WASHER RONDELLE	1	1	1	1		
32	91690–30010	PIN, SPRING AGRAFFE	1	1	1	1		
33	69J–44120–00	HANDLE GEAR SHIFT ASSY LEVIER D'EMBRAYAGE	1	1	1	1		X X
	69J–44120–10	HANDLE GEAR SHIFT ASSY LEVIER D'EMBRAYAGE	1					U U
34	93210–09165	O-RING JOINT TORIQUE	1	1	1	1		
35	90386–90M90	BUSH DOUILLE	2	2	2	2		
36	90201–09M02	WASHER, PLATE RONDELLE, PLATE	1	1	1	1		
37	91490–20015	PIN, COTTER GOUPILLE	1	1	1	1		

FIG. 24 CONTROL 2 COMMANDE 2

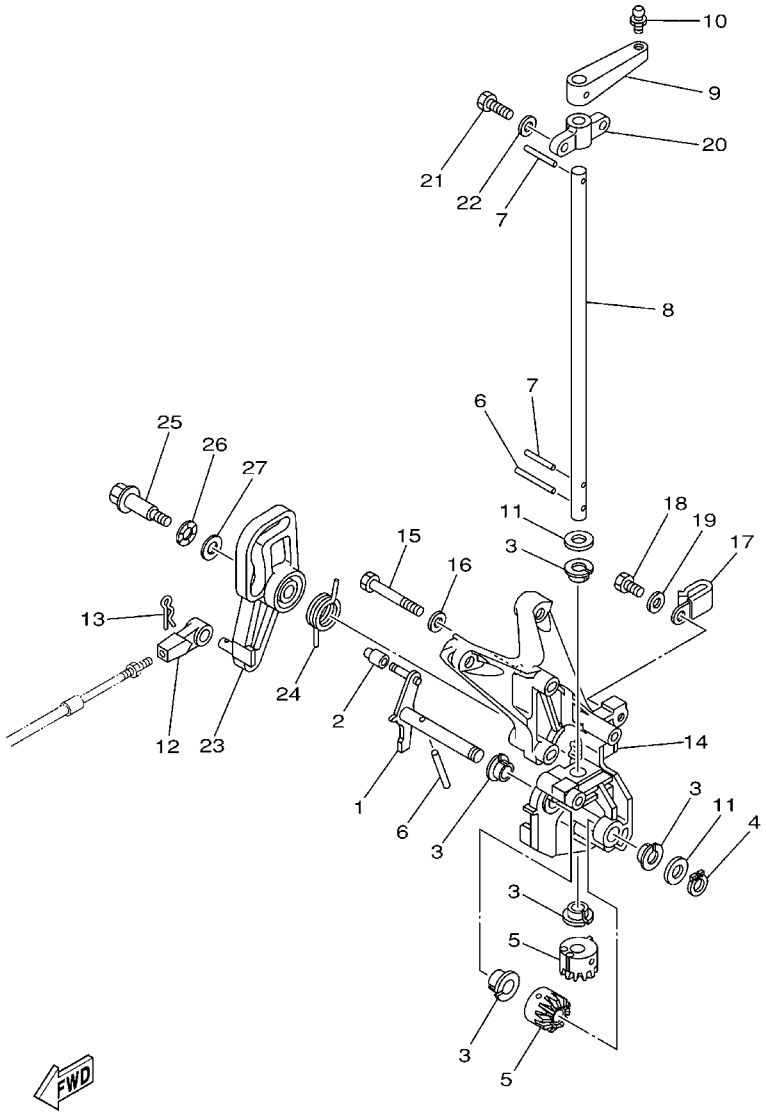

REF. NO.	PART NO. N° PIECES	DESCRIPTION DESCRIPTION	69J3	60L3	69K3	60M3		REMARKS REMARQUES
1	69J–42154–00	LEVER, THROTTLE CONTROL LEVIER DE COMMANDE D'AVANCE	1	1	1	1		
2	68V–42171–00	BUSHING COUSSINET	1	1	1	1		
3	90386–10025	BUSH DOUILLE	5	5	5	5		
4	93410–10082	CIRCLIP CLIPS	1	1	1	1		
5	69J–42152–00–94	GEAR PIGNON	2	2	2	2		
6	91690–30025	PIN, SPRING AGRAFFE	2	2	2	2		
7	91690–30018	PIN, SPRING AGRAFFE	2	2	2	2		
8	69J–42153–00	SHAFT, THROTTLE CONTROL AXE, COMMANDE D'ACCELERATION	1	1	1	1		
9	69J–41632–00–94	LEVER, MAGNETO CONTROL LEVIER, COMMANDE D'AVANCE	1	1	1	1		
10	663–85518–00	JOINT, BALL JOINT SPHERIQUE	1	1	1	1		
11	90201–10M02	WASHER, PLATE RONDELLE, PLATE	2	2	2	2		
12	6E5–48344–00	CABLE END, REMOTE CONTROL CHAPE CABLE	1	1	1	1		
13	90468–18008	CLIP JONC	1	1	1	1		
14	69J–41661–00–94	BRACKET SUPPORT	1	1	1	1		
15	97095–06045	BOLT BOULON	5	5	5	5		
16	92995–06600	WASHER RONDELLE	5	5	5	5		
17	90465–06M67	CLAMP BRIDE	2	2	2	2		
18	97095–06014	BOLT BOULON	2	2	2	2		
19	92995–06600	WASHER RONDELLE	2	2	2	2		
20	676–41662–00	BRACKET SUPPORT	1	1	1	1		
21	97095–06020	BOLT BOULON	2	2	2	2		
22	92995–06600	WASHER RONDELLE	2	2	2	2		
23	69J–41213–00	CAM, ACCEL. CAME, ACCELERATION	1	1	1	1		
24	69J–44135–00	SPRING RESSORT	1	1	1	1		
25	90109–06040	BOLT BOULON	1	1	1	1		
26	90206–10M04	WASHER, WAVE RONDELLE, ONDULEE	1	1	1	1		
27	90201–10M02	WASHER, PLATE RONDELLE, PLATE	1	1	1	1		

FIG. 25 CONTROL 3 COMMANDE 3

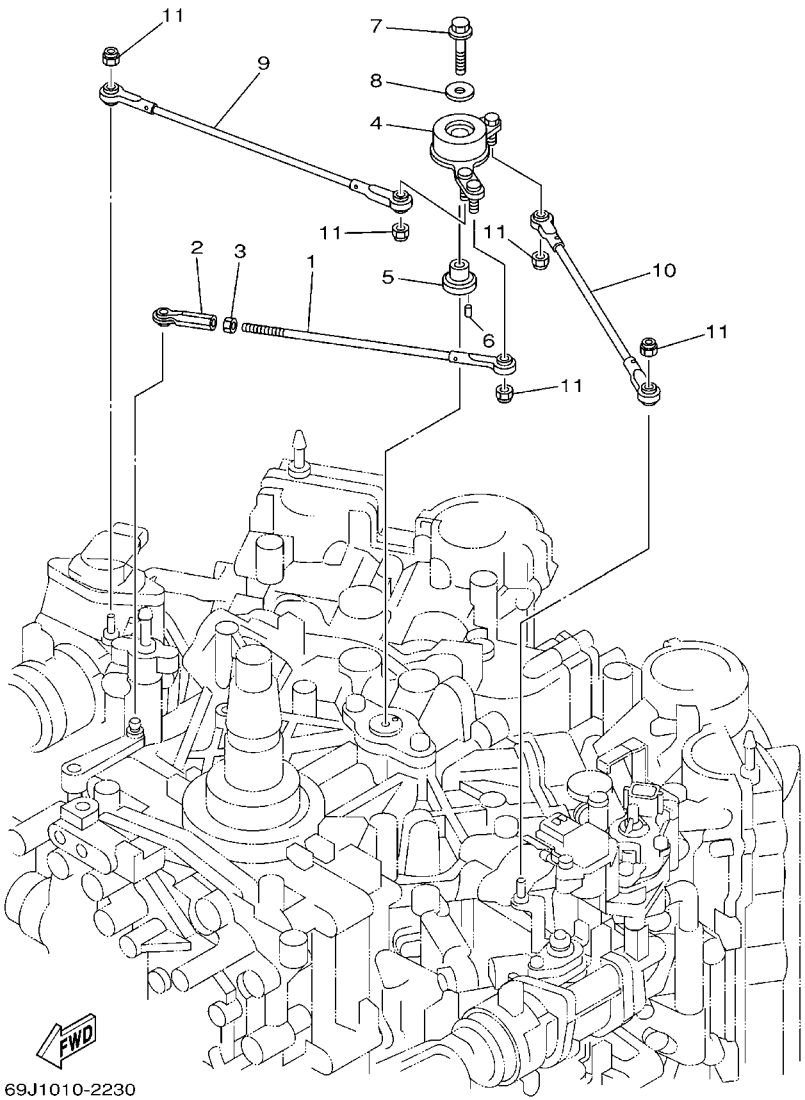

REF. NO.	PART NO. N° PIECES	DESCRIPTION DESCRIPTION	69J3	60L3	69K3	60M3		REMARKS REMARQUES
1	69J–41241–00	ROD, LINK BIELLETTE	1	1	1	1		
2	682–41237–00	JOINT, LINK RACCORD	1	1	1	1		
3	95380–05600	NUT ECROU	1	1	1	1		
4	69J–41210–00	ACCEL. ARM ASSY LEVIER D'ACCELERATION	1	1	1	1		
5	69J–41635–00	SHAFT, LINK CONNECTING AXE, RACCORD	1	1	1	1		
6	91690–30008	PIN, SPRING AGRAFFE	1	1	1	1		
7	95895–06030	BOLT, FLANGE BOULON	1	1	1	1		
8	90201–06M31	WASHER, PLATE RONDELLE, PLATE	1	1	1	1		
9	69J–41211–00	LINK, ACCEL. BIELLETTE, ACCELERATION	1	1	1	1		
10	69J–41636–00	ROD, MAGNETO CONTROL BIELLETTE, COMMANDE D'AVANCE	1	1	1	1		
11	95680–05100	NUT, U ECROU, U	5	5	5	5		

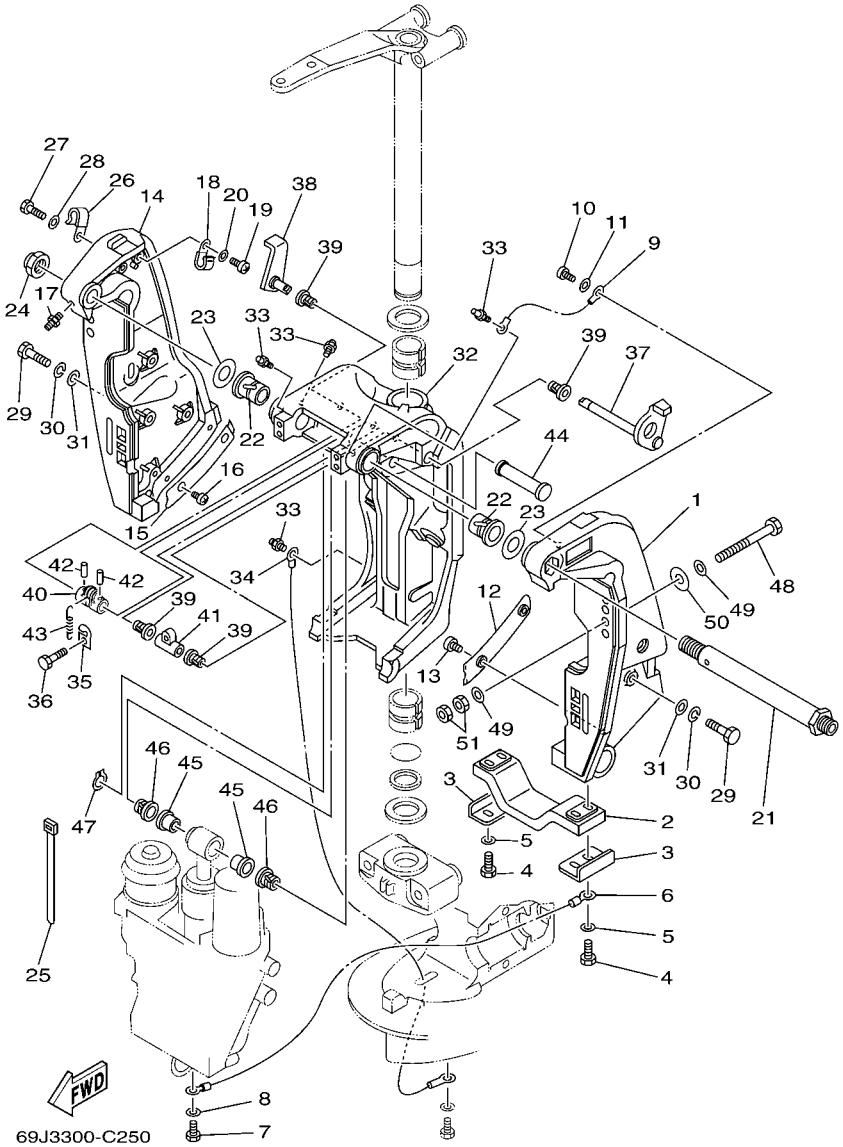

FIG. 26 BRACKET 1 SUPPORT 1

REF. NO.	PART NO. N° PIECES	DESCRIPTION DESCRIPTION	69J3	60L3	69K3	60M3		REMARKS REMARQUES
1	69J–43111–01–8D	BRACKET, CLAMP PRESSE	1	1	1	1		
2	6G5–45251–02	ANODE ANODE	1	1	1	1		
3	6G5–44526–00	PLATE PLAQUE	2	2	2	2		
4	97095–06025	BOLT BOULON	4	4	4	4		
5	92995–06600	WASHER RONDELLE	4	4	4	4		
6	6H1–82148–00	WIRE, LEAD 4 FIL 4	1	1	1	1		
7	97095–06010	BOLT BOULON	1	1	1	1		
8	92995–06600	WASHER RONDELLE	1	1	1	1		
9	6E5–82148–00	WIRE, LEAD 4 FIL 4	1	1	1	1		
10	97885–06012	SCREW, PAN HEAD VIS, A ENCOCHE	1	1	1	1		
11	92995–06600	WASHER RONDELLE	1	1	1	1		
12	61A–43132–00	WASHER, FRICTION RONDELLE, FRICTION	1	1	1	1		
13	97885–06010	SCREW, PAN HEAD VIS, A ENCOCHE	2	2	2	2		
14	69J–43112–01–8D	BRACKET, CLAMP PRESSE	1	1	1	1		
15	61A–43133–00	WASHER,FRICTION RONDELLE	1	1	1	1		
16	97885–06010	SCREW, PAN HEAD VIS, A ENCOCHE	2	2	2	2		
17	93700–06M03	NIPPLE, GREASE PION	1	1	1	1		
18	90465–08M83	CLAMP BRIDE	1	1	1	1		
19	97885–06012	SCREW, PAN HEAD VIS, A ENCOCHE	1	1	1	1		
20	92995–06600	WASHER RONDELLE	1	1	1	1		
21	6R3–43131–00	BOLT, CLAMP BRACKET BOULON, PRESSE	1	1	1	1		
22	90386–25M31	BUSH DOUILLE	2	2	2	2		
23	90201–26M59	WASHER, PLATE RONDELLE, PLATE	2	2	2	2		
24	90185–22M11	NUT, SELF-LOCKING ECROU, AUTO-BLOCANT	1	1	1	1		
25	90465–11M10	CLAMP BRIDE	4	4	4	4		
26	90465–08M83	CLAMP BRIDE	1	1	1	1		
27	97095–06014	BOLT BOULON	1	1	1	1		

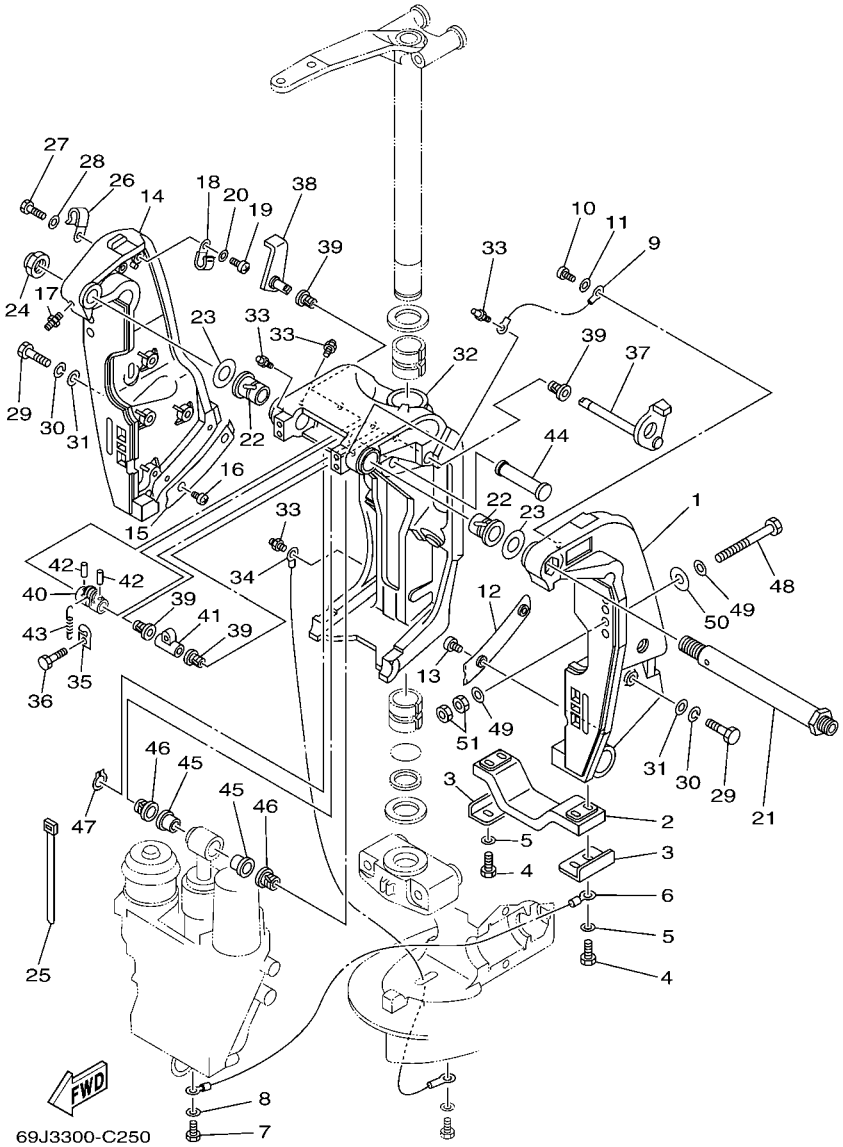

FIG. 26 BRACKET 1 SUPPORT 1

REF. NO.	PART NO. N° PIECES	DESCRIPTION DESCRIPTION	69J3	60L3	69K3	60M3		REMARKS REMARQUES
28	92995–06600	WASHER RONDELLE	1	1	1	1		
29	97095–10045	BOLT BOULON	8	8	8	8		
30	92995–10100	WASHER RONDELLE	8	8	8	8		
31	92995–10600	WASHER RONDELLE	8	8	8	8		
32	61A–43311–21–8D	BRACKET, SWIVEL 1 SUPPORT, PIVOT 1	1	1	1	1		
33	93700–06M03	NIPPLE, GREASE PION	5	5	5	5		
34	69J–82147–00	WIRE, LEAD 4 FIL 4	1	1	1	1		
35	6G5–43144–00	HOOK, SPRING CROCHET	1	1	1	1		
36	97095–06010	BOLT BOULON	1	1	1	1		
37	61A–43181–01	LEVER, TILT STOP LEVIER, VERROUILLAGE RELEVAGE	1	1	1	1		
38	6G5–43185–02	LEVER, TILT STOP LEVIER, VERROUILLAGE RELEVAGE	1	1	1	1		
39	90386–10M16	BUSH DOUILLE	4	4	4	4		
40	6G5–43148–10	COLLAR, DISTANCE ENTRETOISE	1	1	1	1		
41	90387–10M02	COLLAR COLLERETTE	1	1	1	1		
42	91690–30020	PIN, SPRING AGRAFFE	2	2	2	2		
43	90506–20011	SPRING, TENSION RESSORT, TENSION	1	1	1	1		
44	6E5–43126–02	PIN, UPPER SHOCK MOUNT AXE, SUPERIEUR AMORTISSEUR	1	1	1	1		
45	90386–18M63	BUSH DOUILLE	2	2	2	2		
46	90386–18M14	BUSH DOUILLE	2	2	2	2		
47	93410–18M02	CIRCLIP CLIPS	1	1	1	1		
48	90101–12M05	BOLT (L:130MM) BOULON (L:130MM)	4	4	4	4		
49	90201–13M01	WASHER, PLATE RONDELLE, PLATE	8	8	8	8		
50	90201–12M05	WASHER, PLATE RONDELLE, PLATE	4	4	4	4		
51	95380–12600	NUT ECROU	8	8	8	8		

FIG. 27 BRACKET 2 SUPPORT 2

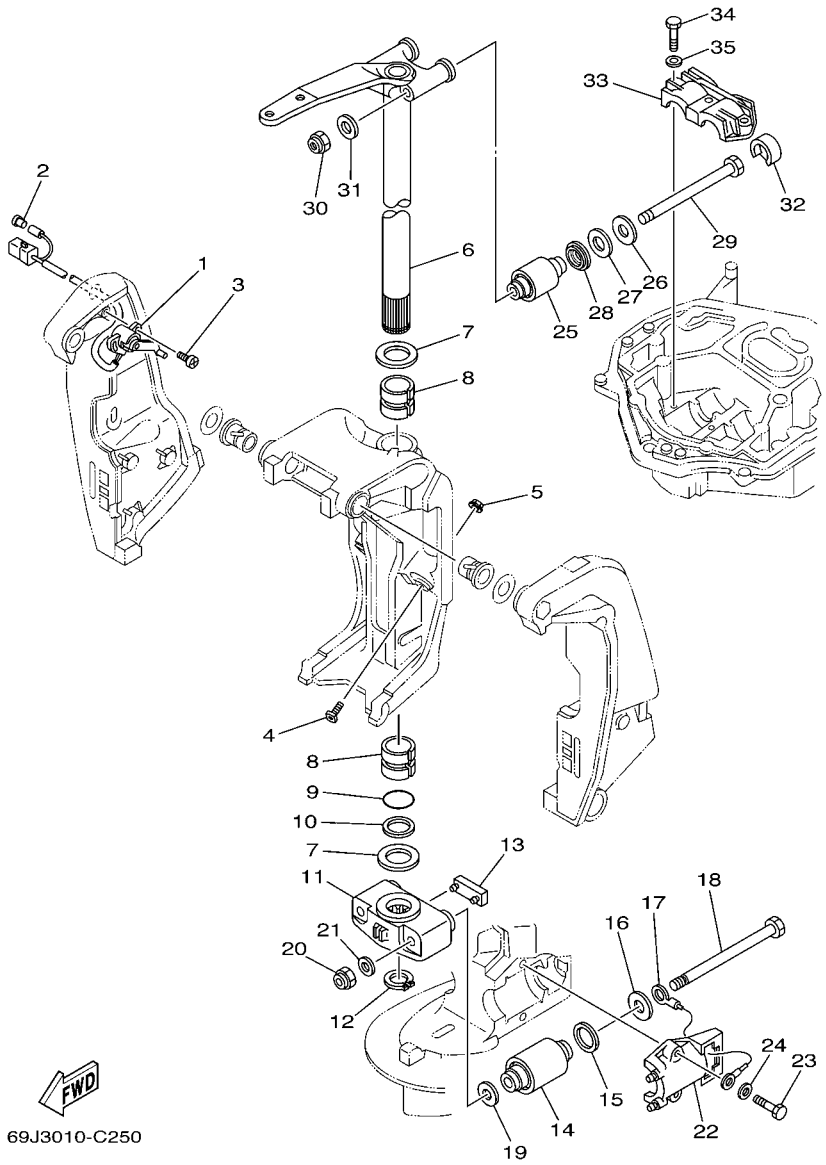

REF. NO.	PART NO. N° PIECES	DESCRIPTION DESCRIPTION	69J3	60L3	69K3	60M3		REMARKS REMARQUES
1	69J–83672–00	TRIM SENDER INCLINER RACCORD	1	1	1	1		
2	703–82119–00	COVER, LEAD WIRE GARNITURE, FIL	1	1	1	1		
3	97885–06016	SCREW, PAN HEAD VIS, A ENCOCHE	2	2	2	2		
4	61A–43376–00	BOLT, THRUST RECEIVER BOULON	2	2	2	2		
5	95780–10300	NUT, FLANGE ECROU	2	2	2	2		
6	69J–42510–00–8D	STEERING BRACKET ASSY DIRECTION SUPPORT (ENS.)	1	1	1	1		
7	90201–40M00	WASHER, PLATE RONDELLE, PLATE	2	2	2	2		
8	90386–39M89	BUSH DOUILLE	2	2	2	2		
9	93210–35321	O-RING JOINT TORIQUE	1	1	1	1		
10	90202–40M47	WASHER, PLATE RONDELLE, PLATE	1	1	1	1		
11	69J–44551–00–8D	HOUSING, LOWER MOUNT RUBBER BOITIER, SILENT-BLOC INFERIEUR	1	1	1	1		
12	93410–37M04	CIRCLIP CLIPS	1	1	1	1		
13	61A–44575–00	DAMPER, LOWER MOUNT RUBBER SILENT-BLOC, INFERIEUR	1	1	1	1		
14	66K–44555–00–94	MOUNT DAMPER, LOWER SIDE SILENT-BLOC, INFERIEUR LATERAL	2	2	2	2		
15	90202–32M19	WASHER, PLATE RONDELLE, PLATE	2	2	2	2		
16	90201–16M55	WASHER, PLATE RONDELLE, PLATE	2	2	2	2		
17	6E5–82149–00	WIRE, LEAD 3 FIL 3	1	1	1	1		
18	90109–14M48	BOLT BOULON	2	2	2	2		
19	90201–15M58	WASHER, PLATE RONDELLE, PLATE	2	2	2	2		
20	90185–14M00	NUT, SELF-LOCKING ECROU, AUTO-BLOCANT	2	2	2	2		
21	92995–14600	WASHER RONDELLE	2	2	2	2		
22	61A–44552–01–94	HOUSING, LOWER MOUNT RUBBER BOITIER, SILENT-BLOC INFERIEUR	2	2	2	2		
23	97095–10045	BOLT BOULON	4	4	4	4		
24	92995–10600	WASHER RONDELLE	4	4	4	4		
25	69J–44514–00–94	MOUNT DAMPER, UPPER SIDE SILENT-BLOC, SUPERIEUR LATERAL	2	2	2	2		
26	90201–16M01	WASHER, PLATE RONDELLE, PLATE	2	2	2	2		
27	90202–28M46	WASHER, PLATE RONDELLE, PLATE	2	2	2	2		

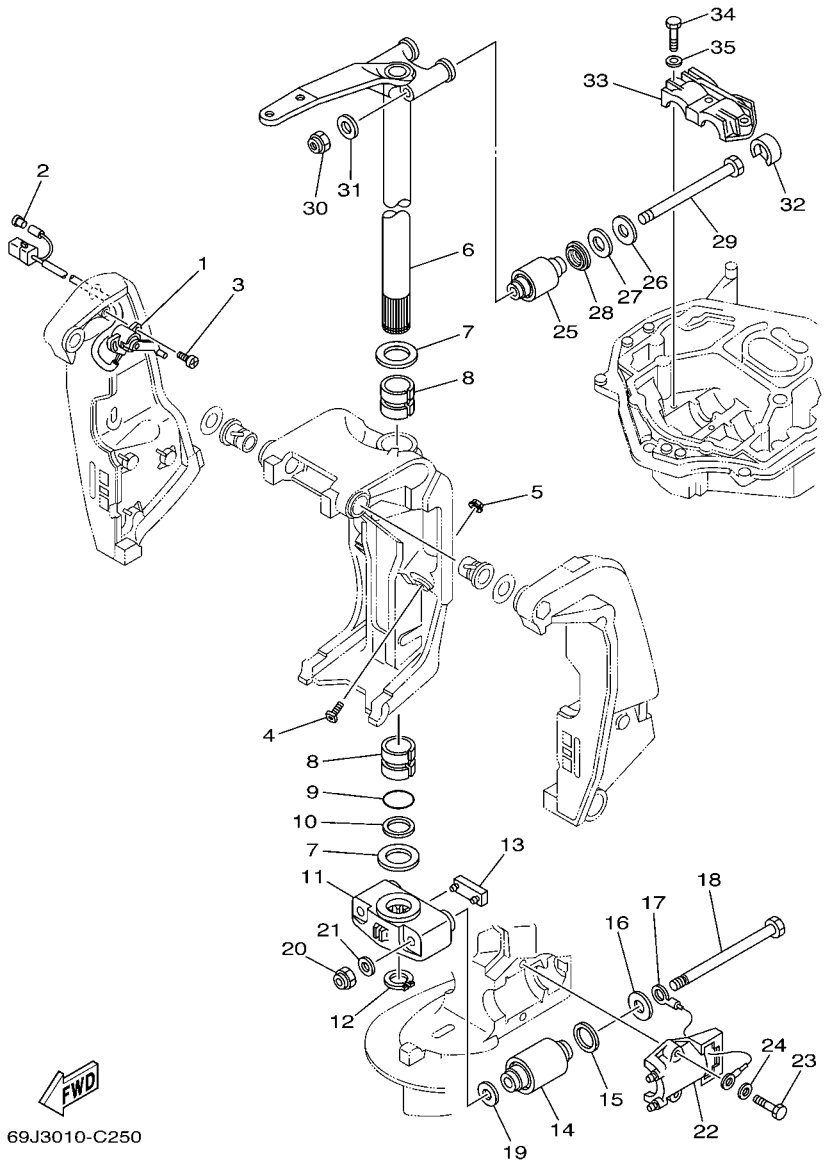

FIG. 27 BRACKET 2 SUPPORT 2

REF. NO.	PART NO. N° PIECES	DESCRIPTION DESCRIPTION	69J3	60L3	69K3	60M3		REMARKS REMARQUES
28	69J–44532–00	STOPPER, UPPER MOUNT PLAQUETTE	2	2	2	2		
29	90109–14M10	BOLT BOULON	2	2	2	2		
30	90185–14M00	NUT, SELF-LOCKING ECROU, AUTO-BLOCANT	2	2	2	2		
31	92995–14600	WASHER RONDELLE	2	2	2	2		
32	69J–44533–00	DAMPER, UPPER MOUNT RUBBER COUVERCLE, SUSPENSION INFERIEU	2	2	2	2		
33	61A–44511–00–94	COVER, UPPER MOUNT COUVERCLE, SUSPENSION SUPERIEU	1	1	1	1		
34	97075–10045	BOLT BOULON	3	3	3	3		
35	92995–10600	WASHER RONDELLE	3	3	3	3		

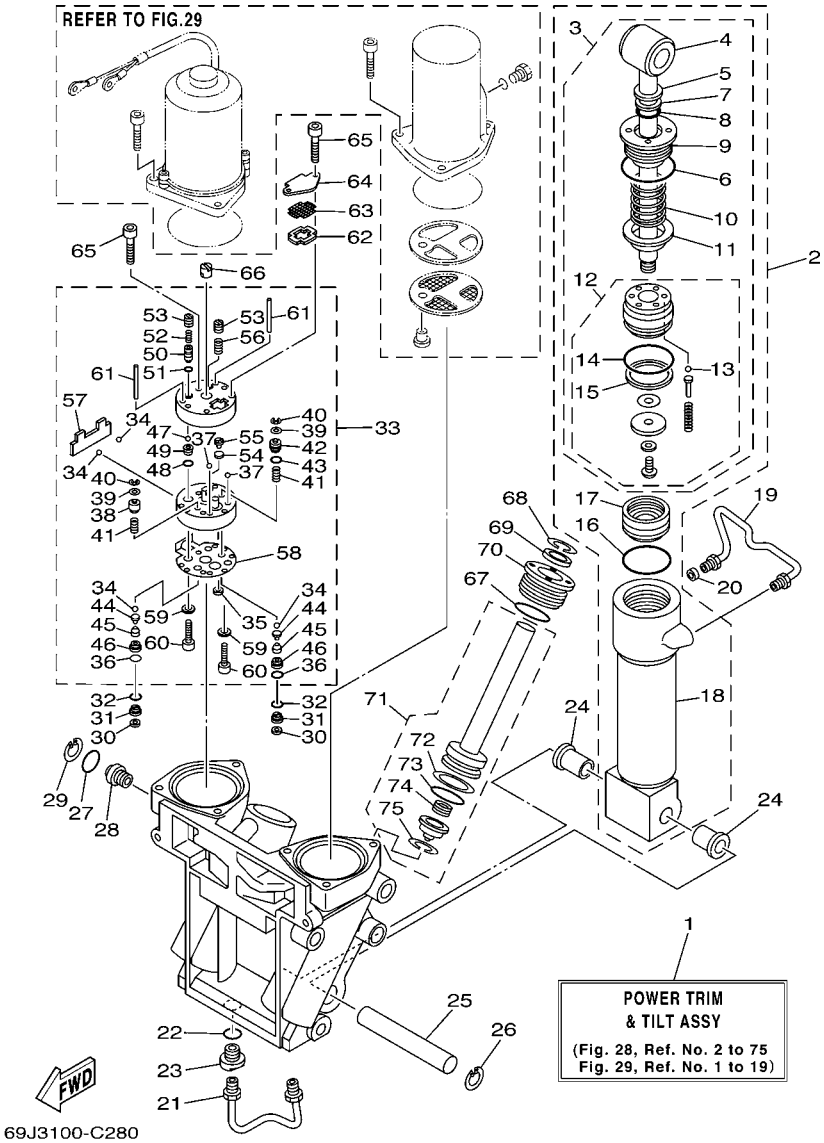

FIG. 28 POWER TRIM & TILT ASSY 1 PUISSANCE PARER ET INCLINER 1

REF. NO.	PART NO. N° PIECES	DESCRIPTION DESCRIPTION	69J3	60L3	69K3	60M3		REMARKS REMARQUES
1	69J–43800–01–4D	POWER TRIM & TILT ASSY PUISSANCE PARER ET INCLINER (E	1	1	1	1		
2	69J–43840–01	POWER TILT ASSY PUISSANCE INCLINER (ENS.)	1	1	1	1		
3	69J–43810–01	.TILT PISTON SUB ASSY .INCLINER PISTON AUXILIAIRE(EN	1	1	1	1		
4	69J–43801–00	..ROD ..TIGE	1	1	1	1		
5	93106–19N50	..OIL SEAL ..JOINT SPY	1	1	1	1		
6	6H1–43861–00	..O-RING ..JOINT TORIQUE	1	1	1	1		
7	6H1–43872–00	..RING, BACK UP ..RESSORT	1	1	1	1		
8	61A–4389H–00	..O-RING ..JOINT TORIQUE	1	1	1	1		
9	61A–43811–00	..SCREW, CYLINDER END ..VIS, CYLINDRE RACCORD	1	1	1	1		
10	69J–4384H–00	..SPRING ..RESSORT	1	1	1	1		
11	69J–4382E–00	..ADAPTOR 2 ..ADAPTEUR 2	1	1	1	1		
12	69J–4380P–01	..PISTON SUB ASSY ..PISTON AUXILIAIRE (ENS.)	1	1	1	1		
13	93505–32038	...BALL ...BILLE	5	5	5	5		
14	61A–43861–00	...O-RING ...JOINT TORIQUE	1	1	1	1		
15	61A–43871–00	...RING, BACK UP ...SEGMENT	1	1	1	1		
16	61A–43861–00	.O-RING .JOINT TORIQUE	1	1	1	1		
17	6H1–43814–00	.PISTON, FREE .PISTON	1	1	1	1		
18	61A–43813–01	.CYLINDER, TILT .CYLINDRE	1	1	1	1		
19	61A–43835–01	PIPE TUYAU	1	1	1	1		
20	69J–4388J–00	PLUG 2 BOUCHON 2	1	1	1	1		
21	69J–43833–00	PIPE TUYAU	1	1	1	1		
22	93210–17239	O-RING JOINT TORIQUE	1	1	1	1		
23	69J–4388E–00	BOLT ,SCREW VIS	1	1	1	1		
24	90386–18M14	BUSH DOUILLE	2	2	2	2		
25	61A–43818–00	PIN, LOWER SHOCK MOUNT AXE, INFERIEUR AMORTISSEUR	1	1	1	1		
26	61A–43876–00	RING, SNAP RESSORT	1	1	1	1		
27	93210–18397	O-RING JOINT TORIQUE	1	1	1	1		

FIG. 28 POWER TRIM & TILT ASSY 1 PUISSANCE PARER ET INCLINER 1

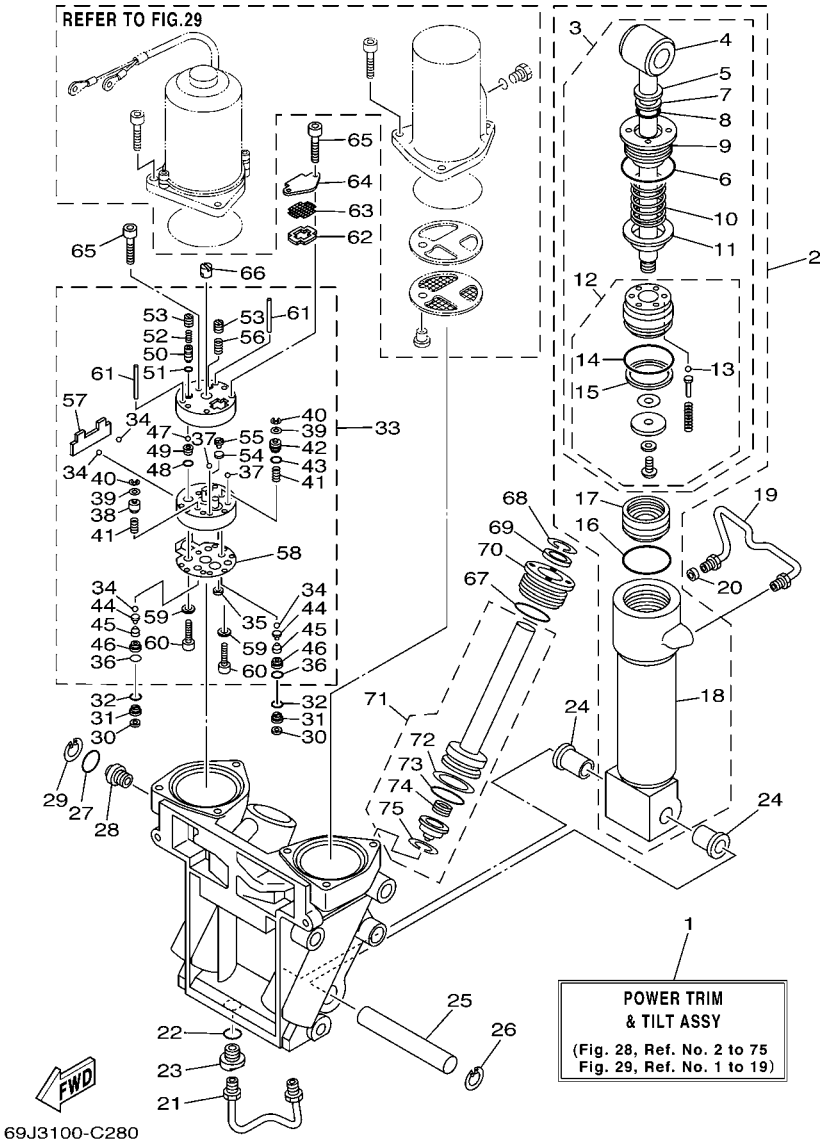

REF. NO.	PART NO. N° PIECES	DESCRIPTION DESCRIPTION	69J3	60L3	69K3	60M3		REMARKS REMARQUES
28	69J–43845–00	SCREW, MANUAL RELEASE VIS	1	1	1	1		
29	6H1–43875–00	RING, SNAP RESSORT	1	1	1	1		
30	69J–4381C–00	FILTER 3 FILTRE 3	2	2	2	2		
31	69J–43899–00	PLATE STOPPER PLAQUETTE	2	2	2	2		
32	69J–4389J–00	O-RING JOINT TORIQUE	2	2	2	2		
33	69J–43830–01	GEAR PUMP ASSY POMPE A PIGNON (ENS.)	1	1	1	1		
34	93505–32038	.BALL .BILLE	4	4	4	4		
35	69J–4381C–00	.FILTER 3 .FILTRE 3	1	1	1	1		
36	69J–4389J–00	.O-RING .JOINT TORIQUE	2	2	2	2		
37	93503–16003	.BALL .BILLES	2	2	2	2		
38	69J–4384M–00	.PISTON, SHUTTLE 2 .PISTON 2	1	1	1	1		
39	69A–4384F–00	.SEAL, MAIN VALVE .JOINT	2	2	2	2		
40	99001–03600	.CIRCLIP .CIRCLIP	2	2	2	2		
41	69J–43894–00	.SPRING, SHUTTLE RETURN .RESSORT	2	2	2	2		
42	69J–43841–00	.PISTON, SHUTTLE .PISTON	1	1	1	1		
43	6H1–43883–00	.O-RING .JOINT TORIQUE	1	1	1	1		
44	60V–4386A–00	.PIN, ABSORBER VALVE .GOUPILLE, SOUPAPE	2	2	2	2		
45	69J–43853–00	.SPRING, MAIN VALVE .RESSORT	2	2	2	2		
46	69J–43893–00	.WASHER .RONDELLE	2	2	2	2		
47	93501–08001	.BALL .BILLE	2	2	2	2		
48	93210–08391	.O-RING .JOINT TORIQUE	1	1	1	1		
49	69J–43851–00	.SEAT, RELIEF VALVE .SIEGE	1	1	1	1		
50	69J–43844–00	.PIN, VALVE SUPPORT .GOUPILLE	1	1	1	1		
51	93210–064A5	.O-RING .JOINT TORIQUE	1	1	1	1		
52	69J–43855–00	.SPRING, UP RELIEF .RESSORT	1	1	1	1		
53	69J–43843–00	.SCREW, VALVE LOCK .VIS	2	2	2	2		
54	6H1–4384G–11	.SEAL, RELIEF VALVE .JOINT	1	1	1	1		

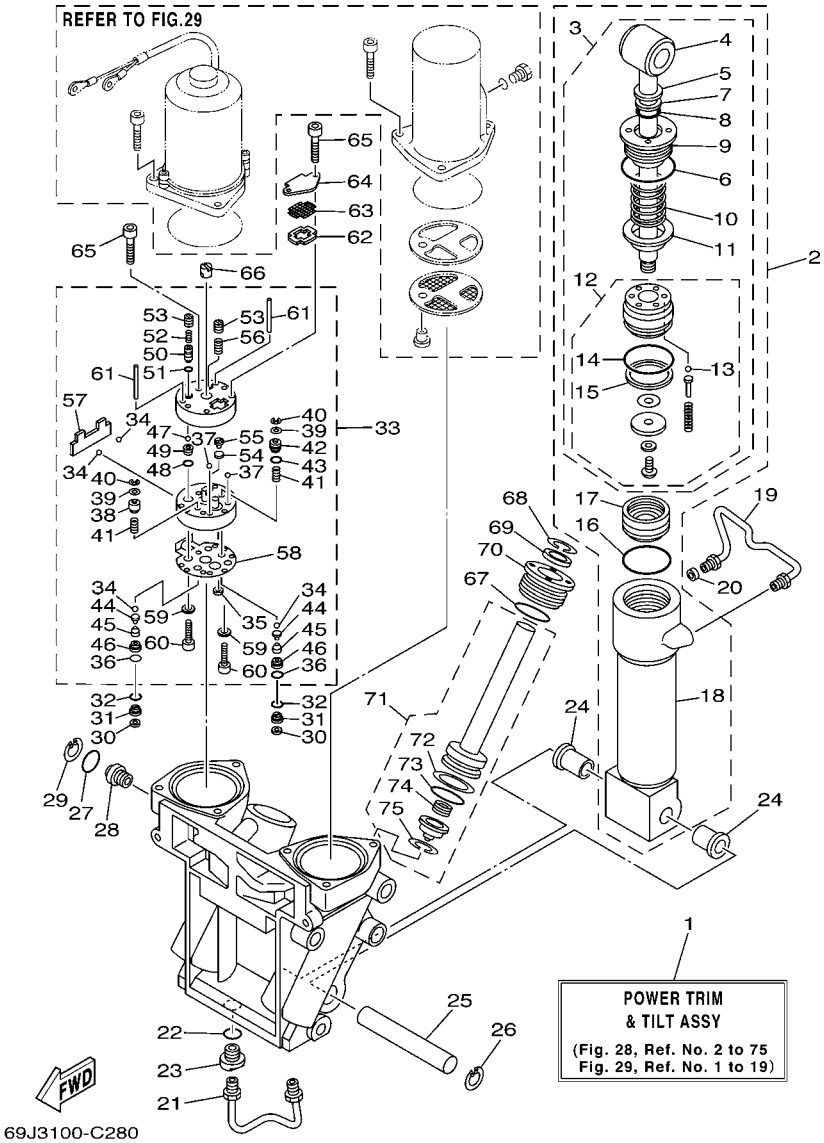

FIG. 28 POWER TRIM & TILT ASSY 1 PUISSANCE PARER ET INCLINER 1

REF. NO.	PART NO. N° PIECES	DESCRIPTION DESCRIPTION	69J3	60L3	69K3	60M3		REMARKS REMARQUES
55	6H1–43844–10	.PIN, VALVE SUPPORT .GOUPILLE	1	1	1	1		
56	6H1–43856–10	.SPRING, DOWN RELIEF .RESSORT	1	1	1	1		
57	69J–43854–00	.SPRING, MANUAL RELEASE .RESSORT	1	1	1	1		
58	69J–4384G–00	.SEAL, RELIEF VALVE .JOINT	1	1	1	1		
59	CS3–4387G–00	.WASHER .RONDELLE	2	2	2	2		
60	91318–05025	.BOLT .BOULON	2	2	2	2		
61	93604–35236	.PIN, DOWEL .CLAVETTE	2	2	2	2		
62	69J–43871–00	RING, BACK UP SEGMENT	1	1	1	1		
63	69J–43816–00	FILTER 1 FILTRE 1	1	1	1	1		
64	69J–4381J–00	PLATE PLAQUE	1	1	1	1		
65	91318–05040	BOLT BOULON	3	3	3	3		
66	69J–43831–00	CONNECTOR, SHAFT RACCORD	1	1	1	1		
67	61A–43861–00	O-RING JOINT TORIQUE	2	2	2	2		
68	6T4–43875–01	RING, SNAP RESSORT	2	2	2	2		
69	61A–43822–00	SEAL, TRIM DUST JOINT	2	2	2	2		
70	61A–43821–00	SCREW, TRIM CYLINDER END VIS	2	2	2	2		
71	69J–43820–00	TRIM PISTON SUB ASSY PARER PISTON AUXILIAIRE (ENS.)	2	2	2	2		
72	61A–43874–00	.RING, BACK UP .RESSORT	1	1	1	1		
73	61A–43864–00	.O-RING .JOINT TORIQUE	1	1	1	1		
74	61A–4384H–10	.SPRING .RESSORT	1	1	1	1		
75	61A–43875–10	.RING, SNAP .RESSORT	1	1	1	1		

FIG. 29 POWER TRIM & TILT ASSY 2 PUISSANCE PARER ET INCLINER 2

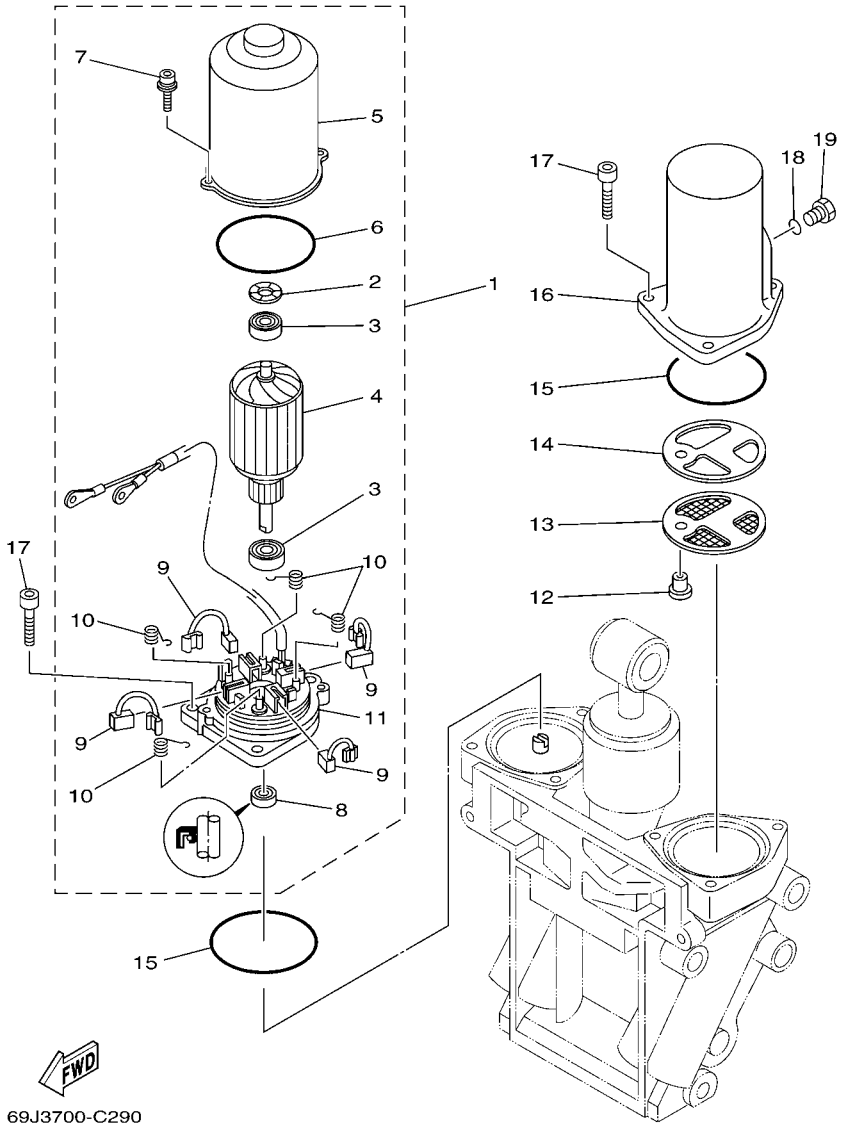

REF. NO.	PART NO. N° PIECES	DESCRIPTION DESCRIPTION	69J3	60L3	69K3	60M3		REMARKS REMARQUES
1	69J–43880–00	MOTOR ASSY MOTEUR (ENS.)	1	1	1	1		
2	90206–14N50	.WASHER, WAVE .RONDELLE, ONDULEE	1	1	1	1		
3	93399–999T6	.BEARING .ROULEMENT	2	2	2	2		
4	69J–43805–00	.ARMATURE ASSY .INDUIT (ENS.)	1	1	1	1		
5	69J–43804–00	.STATOR ASSY .STATOR (ENS.)	1	1	1	1		
6	69J–43861–00	.O-RING .JOINT TORIQUE	1	1	1	1		
7	69J–43886–00	.BOLT .BOULON	2	2	2	2		
8	69J–43882–00	.OIL SEAL .JOINT SPI	1	1	1	1		
9	69J–43891–00	.BRUSH 1 .BALAI 1	4	4	4	4		
10	69J–4386K–00	.SPRING, BRUSH .RESSORT, BALAI	4	4	4	4		
11	69J–43881–00	.FRAME, END .BATI	1	1	1	1		
12	69J–4388H–00	PLUG BOUCHON	1	1	1	1		
13	69J–43817–00	FILTER 2 FILTRE 2	1	1	1	1		
14	69J–4388F–00	SPACER ENTRETOISE	1	1	1	1		
15	6H1–43869–00	O-RING JOINT TORIQUE	2	2	2	2		
16	69J–43828–00	BODY, RESERVOIR CORPS	1	1	1	1		
17	69J–43888–00	BOLT, SOCKET BOULON	6	6	6	6		
18	93210–09165	O-RING JOINT TORIQUE	1	1	1	1		
19	6H1–43829–00	PLUG, RESERVOIR BOUCHON	1	1	1	1		

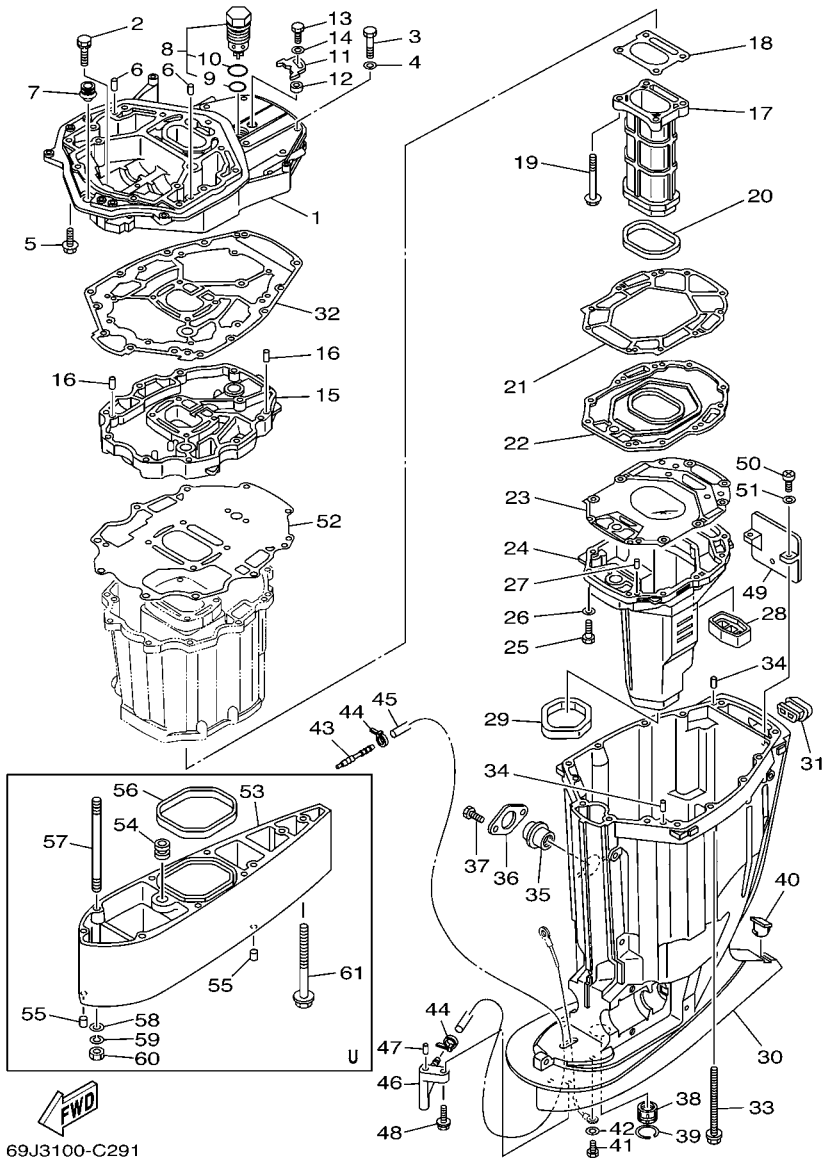

FIG. 30 UPPER CASING FOURREAU

REF. NO.	PART NO. N° PIECES	DESCRIPTION DESCRIPTION	69J3	60L3	69K3	60M3		REMARKS REMARQUES
1	69J–41137–02–94	GUIDE, EXHAUST COLLECTEUR D'ECHAPPEMENT	1	1	1	1		
2	90119–08M79	BOLT, WITH WASHER BOULON, AVEC RONDELLE	2	2	2	2		
3	97075–10045	BOLT BOULON	7	7	7	7		
4	92995–10600	WASHER RONDELLE	7	7	7	7		
5	97575–10535	BOLT, WITH WASHER VIS HEXAGONAL AVC RONDELLE	7	7	7	7		
6	93608–16M16	PIN, DOWEL AXE	2	2	2	2		
7	6E5–42724–00	GROMMET PASSE-FIL	1	1	1	1		
8	69J–11371–00	COVER COUVERCLE	1	1	1	1		
9	93210–28543	.O-RING .JOINT TORIQUE	1	1	1	1		
10	93210–33MG4	.O-RING .JOINT TORIQUE	1	1	1	1		
11	69J–12233–00	PLATE, GUIDE STOPPER 1 PLAQUE, GUIDE BUTEE 1	1	1	1	1		
12	90387–06037	COLLAR COLLERETTE	1	1	1	1		
13	97095–06020	BOLT BOULON	1	1	1	1		
14	92995–06600	WASHER RONDELLE	1	1	1	1		
15	69J–41131–10–94	MANIFOLD, EXT. 1 PIPE D'ECHAPPEMENT	1	1	1	1		
16	93608–16M16	PIN, DOWEL AXE	2	2	2	2		
17	69J–41132–10–5B	MANIFOLD, EXHAUST PIPE D'ECHAPPEMENT	1	1	1	1		
18	69J–41134–A0	GASKET, EXHAUST MANIFOLD JOINT, PIPE D'ECHAPPEMENT	1	1	1	1		
19	97575–08590	BOLT, WITH WASHER VIS HEXAGONAL AVC RONDELLE	4	4	4	4		
20	69J–41138–00	SEAL, EXT. 1 JOINT DE GROUPE 1	1	1	1	1		
21	69J–41135–A0	GASKET, EXHAUST MANIFOLD JOINT, PIPE D'ECHAPPEMENT	1	1	1	1		
22	69J–45181–00–5B	PLATE PLAQUETTE	1	1	1	1		
23	69J–41136–A0	GASKET, EXHAUST MANIFOLD 4 JOINT, PIPE D'ECHAPPEMENT 4	1	1	1	1		
24	69J–14711–10–5B	MUFFLER 1 POT D'ECHAPPEMENT 1	1	1	1	1		
25	97075–08035	BOLT BOULON	10	10	10	10		
26	92995–08600	WASHER RONDELLE	10	10	10	10		
27	93606–19M23	PIN, DOWEL GOUPILLE	2	2	2	2		

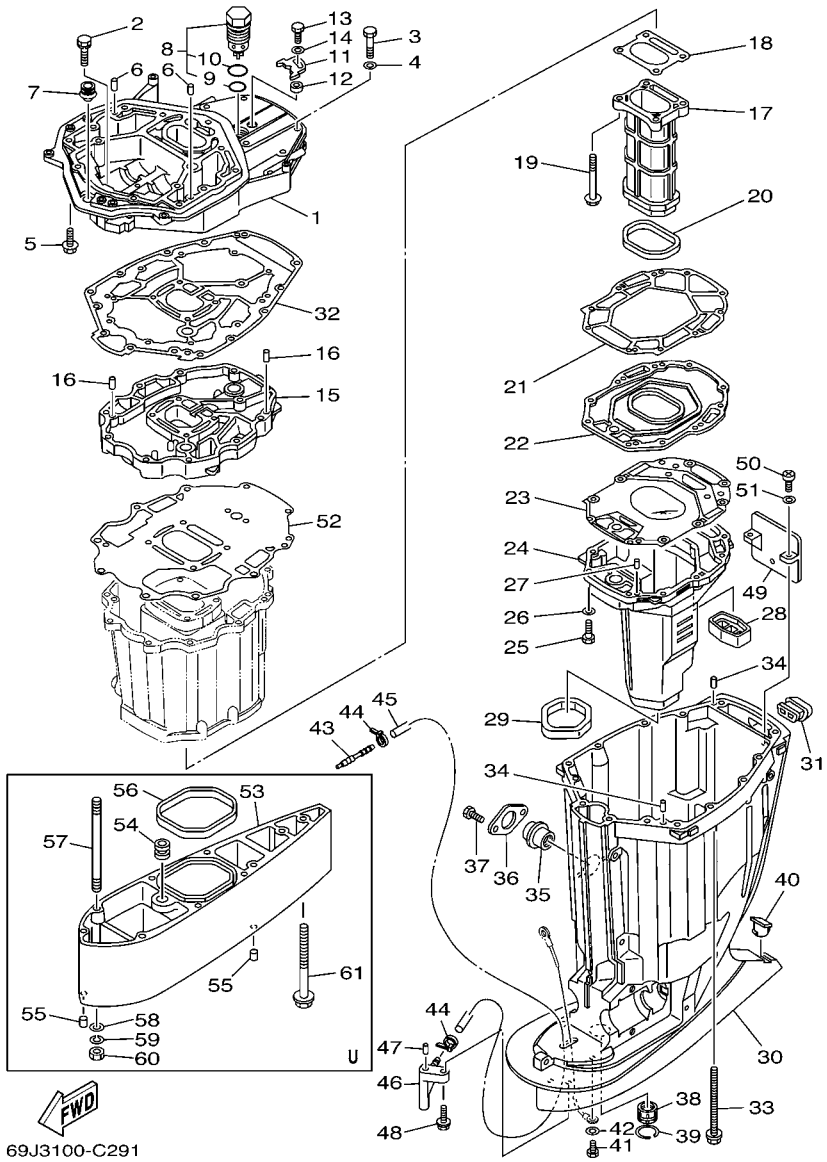

FIG. 30 UPPER CASING FOURREAU

REF. NO.	PART NO. N° PIECES	DESCRIPTION DESCRIPTION	69J3	60L3	69K3	60M3		REMARKS REMARQUES
28	69J–45127–00	SEAL JOINT	1	1	1	1		
29	69J–45123–00	GASKET, MUFFLER JOINT, POT DE DETENTE	1	1	1	1		
30	69J–45111–02–8D	CASING, UPPER FOURREAU	1	1	1	1		
31	69J–42769–00	SEAL, RUBBER BOURRELET, CAOUTCHOUC	1	1	1	1		
32	69J–45113–10	GASKET, UPPER CASING JOINT, TUBE D'ARBRE	1	1	1	1		
33	90119–10007	BOLT, WITH WASHER BOULON, AVEC RONDELLE	6	6	6	6		
34	93608–16M16	PIN, DOWEL AXE	2	2	2	2		
35	69J–15316–00	DAMPER, ENGINE MOUNT 1 AMORTISSEUR DE SUPPORT	1	1	1	1		
36	69J–45152–00–8D	COVER, UPPER CASING 2 CAPUCHON FOURREAU	1	1	1	1		
37	97095–06014	BOLT BOULON	2	2	2	2		
38	69J–45318–01	BUSHING, DRIVE SHAFT DOUILLE, ARBRE MOTEUR	1	1	1	1		
39	93420–36M01	CIRCLIP CIRCLIP, TYPE S	1	1	1	1		
40	61A–45155–00	CAP CAPUCHON	1	1	1	1		
41	97095–06010	BOLT BOULON	1	1	1	1		
42	92995–06600	WASHER RONDELLE	1	1	1	1		
43	6E5–83558–00	END, NIPPLE RACCORD DE NIPPLE	1	1	1	1		
44	90465–11M10	CLAMP BRIDE	2	2	2	2		
45	90445–07010	HOSE DURITE	1	1	1	1		X X
	90445–07012	HOSE DURITE	1					U U
46	61A–45378–00	NIPPLE, HOSE RACCORD, TUYAU	1	1	1	1		
47	93606–12019	PIN, DOWEL GOUPILLE	1	1	1	1		
48	90119–06M17	BOLT, WITH WASHER BOULON, AVEC RONDELLE	1	1	1	1		
49	69J–14624–01	COVER, EXHAUST CACHE D'ECHAPPEMENT	1	1	1	1		
50	97880–06016	SCREW, PAN HEAD VIS, TETE TRONCONIQUE	2	2	2	2		
51	92990–06600	WASHER, PLATE RONDELLE, PLATE	2	2	2	2		
52	69J–15312–01	GASKET, OIL PAN JOINT DE VENTILATEUR D'HUILE	1	1	1	1		
53	69J–45211–01–8D	EXTENSION EXTENSION	1					U U

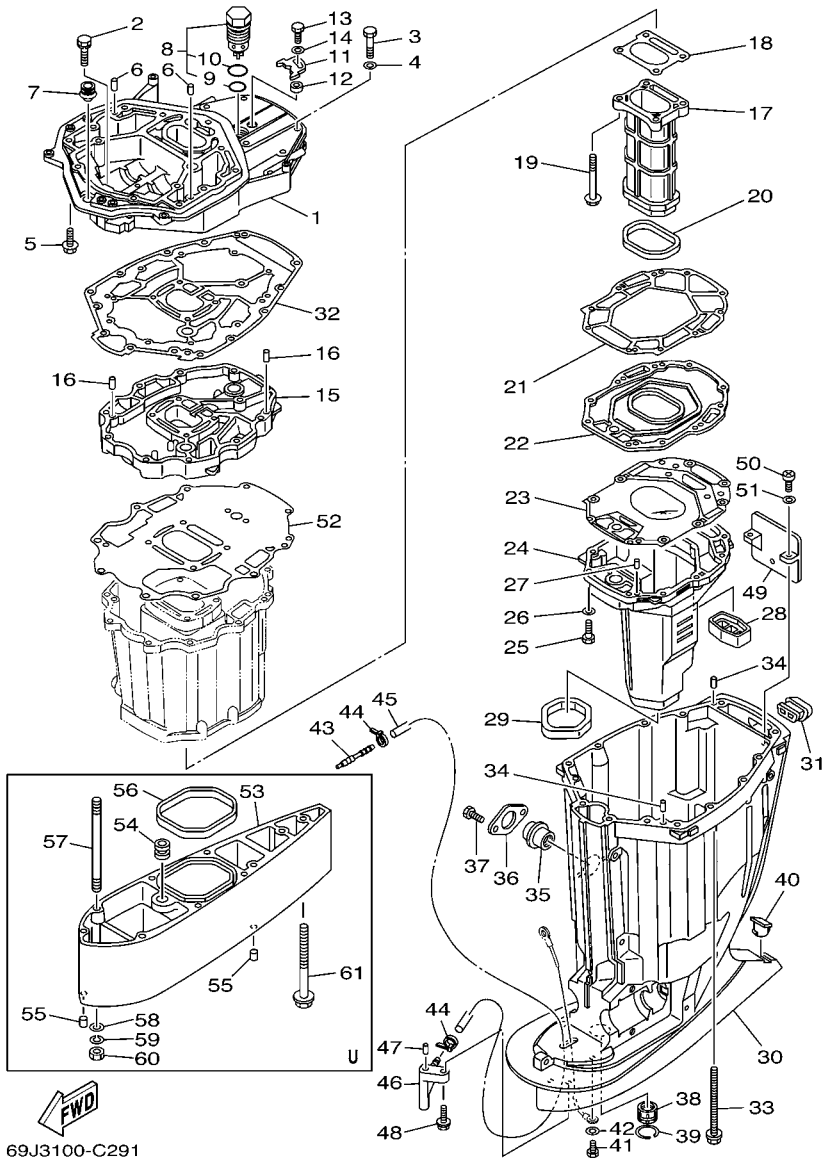

FIG. 30 UPPER CASING FOURREAU

REF. NO.	PART NO. N° PIECES	DESCRIPTION DESCRIPTION	69J3	60L3	69K3	60M3		REMARKS REMARQUES
54	6E5–44366–00	DAMPER, WATER SEAL JOINT, TUBE D'EAU	1					U U
55	93608–12M05	PIN, DOWEL AXE	2					U U
56	69J–45159–00	DAMPER CAOUTCHOUC, JOINT	1					U U
57	90116–10012	BOLT, STUD GOUJON	6					U U
58	92990–10600	WASHER, PLATE RONDELLE, PLATE	6					U U
59	92990–10100	WASHER, SPRING RONDELLE, GROWER	6					U U
60	95380–10600	NUT ECROU	6					U U
61	90119–10008	BOLT, WITH WASHER BOULON, AVEC RONDELLE	1					U U

FIG. 31 OIL PAN — VENTILATEUR D'HUILE

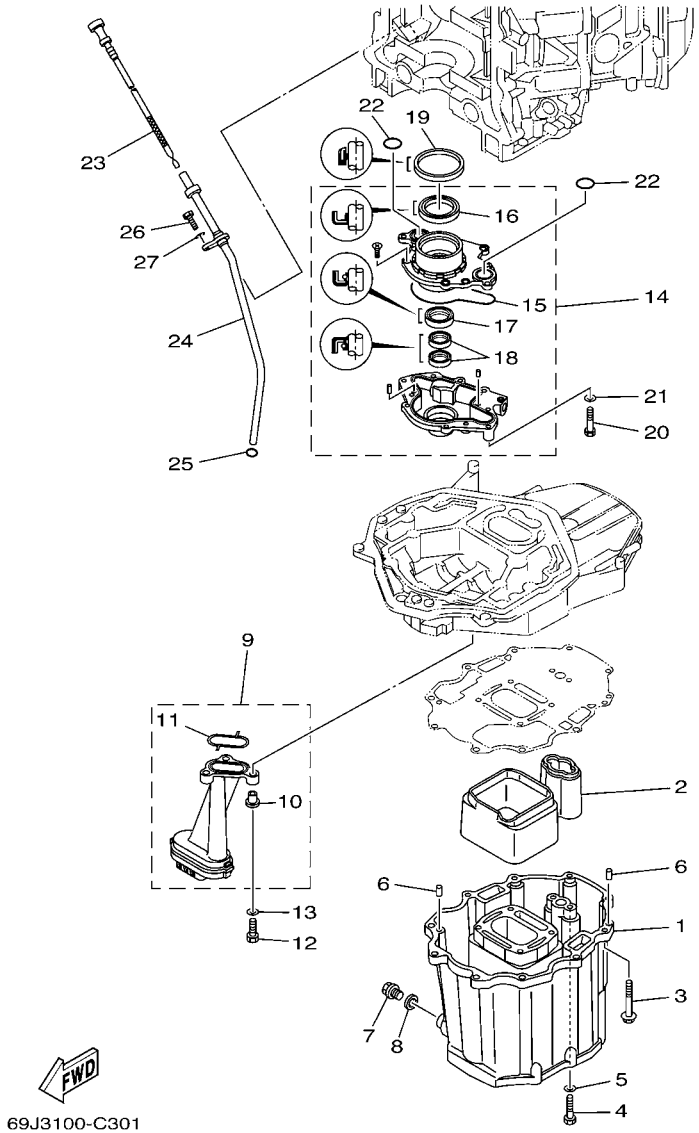

REF. NO.	PART NO. N° PIECES	DESCRIPTION DESCRIPTION	69J3	60L3	69K3	60M3		REMARKS REMARQUES
1	69J–15311–00–5B	OIL PAN VENTILATEUR D'HUILE	1	1	1	1		
2	69J–15761–00	SEAL, RUBBER 1 JOINT CAOUTCHOUC 1	1	1	1	1		
3	97575–08560	BOLT, WITH WASHER VIS HEXAGONAL AVC RONDELLE	10	10	10	10		
4	97095–08035	BOLT BOULON	2	2	2	2		
5	92995–08600	WASHER RONDELLE	2	2	2	2		
6	93608–16M16	PIN, DOWEL AXE	2	2	2	2		
7	90340–14M06	PLUG, STRAIGHT SCREW PLOT, FILETE DROIT	1	1	1	1		
8	90430–14M09	GASKET JOINT	1	1	1	1		
9	69J–13411–00	STRAINER, OIL FILTRE, HUILE	1	1	1	1		
10	90387–06M64	.COLLAR .COLLERETTE	3	3	3	3		
11	69J–13415–00	.SEAL, OIL STRAINER .JOINT, FILTRE A HUILE	1	1	1	1		
12	97027–06025	BOLT BOULON	3	3	3	3		
13	92907–06600	WASHER, PLATE RONDELLE	3	3	3	3		
14	69J–13300–00	OIL PUMP ASSY POMPE A HUILE COMPLETE	1	1	1	1		
15	69J–13329–00	.GASKET, PUMP COVER .JOINT, COUVERCLE DE POMPE	1	1	1	1		
16	69J–13338–00	.OIL SEAL .JOINT SPY	1	1	1	1		
17	69J–13119–00	.OIL SEAL .JOINT SPY	1	1	1	1		
18	69J–13631–00	.OIL SEAL .JOINT SPY	2	2	2	2		
19	69J–11355–00	SEAL, CYLINDER 1 JOINT, SPY CYLINDRE	1	1	1	1		
20	97095–06040	BOLT BOULON	4	4	4	4		
21	92995–06600	WASHER RONDELLE	4	4	4	4		
22	93210–25552	O-RING JOINT TORIQUE	2	2	2	2		
23	69J–15362–00	PLUG, OIL LEVEL PLOT, NIVEAU D'HUILE	1	1	1	1		
24	69J–15377–00	GUIDE, INLET GUIDE D'ADMISSION	1	1	1	1		
25	93210–19MJ3	O-RING JOINT TORIQUE	1	1	1	1		
26	97095–06020	BOLT BOULON	1	1	1	1		
27	92995–06600	WASHER RONDELLE	1	1	1	1		

FIG. 32 LOWER CASING & DRIVE 1 BOITIER D'HELICE TRANSMISSION 1

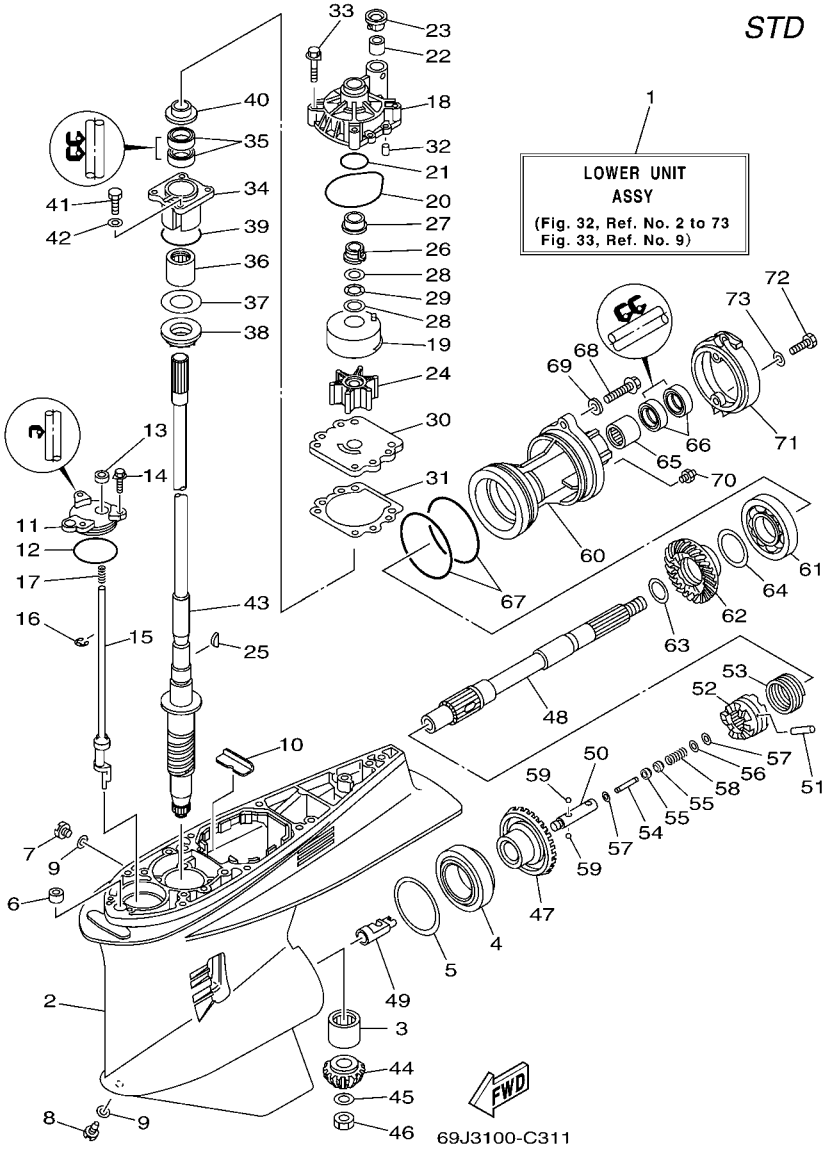

REF. NO.	PART NO. N° PIECES	DESCRIPTION DESCRIPTION	69J3	60L3	69K3	60M3		REMARKS REMARQUES
1	69J–45300–21–8D	LOWER UNIT ASSY UNITE INFERIEURE (ENS.)	1	1				X X
	69J–45300–31–8D	LOWER UNIT ASSY UNITE INFERIEURE (ENS.)	1					U U
2	61A–45301–10–8D	CASING, LOWER BEQUILLE	1	1				
3	93311–832V2	BEARING ROULEMENT	1	1				
4	93332–000W1	BEARING ROULEMENT	1	1				
5	61A–45567–00–10	SHIM (T:0.10MM) CALE (T:0.10MM)	1	1				UR UR
	61A–45567–00–12	SHIM (T:0.12MM) CALE (T:0.12MM)	1	1				UR UR
	61A–45567–00–15	SHIM (T:0.15MM) CALE (T:0.15MM)	1	1				UR UR
	61A–45567–00–18	SHIM (T:0.18MM) CALE (T:0.18MM)	1	1				UR UR
	61A–45567–00–30	SHIM (T:0.30MM) CALE (T:0.30MM)	1	1				UR UR
	61A–45567–00–40	SHIM (T:0.40MM) CALE (T:0.40MM)	1	1				UR UR
	61A–45567–00–50	SHIM (T:0.50MM) CALE (T:0.50MM)	1	1				UR UR
6	663–44366–00	DAMPER, WATER SEAL JOINT, TUBE D'EAU	1	1				
7	90340–08002	PLUG, STRAIGHT SCREW PLOT, FILETE DROIT	1	1				
8	688–45341–10	PLUG, DRAIN BOUCHON DE VIDANGE	1	1				
9	90430–08020	GASKET JOINT	2	2				
10	61A–45376–00–94	GUIDE, SEAL DAMPER BUTEE, JOINT CAOUTCHOUC	1	1				
11	61A–45321–01	PLATE PLAQUETTE	1	1				
12	93210–64488	O-RING JOINT TORIQUE	1	1				
13	93106–09014	OIL SEAL JOINT SPY	1	1				
14	90119–06M10	BOLT, WITH WASHER BOULON, AVEC RONDELLE	3	3				
15	69J–44150–00	SHIFT CAM ASSY CAME D'INVERSION	1	1				
16	99001–08600	CIRCLIP CIRCLIP	1	1				
17	90501–11M10	SPRING, COMPRESSION RESSORT, COMPRESSION	1	1				
18	61A–44311–01	HOUSING, WATER PUMP CORPS, POMPE A EAU	1	1				
19	61A–44322–02	INSERT, CARTRIDGE CUVETTE	1	1				
20	93210–86M38	O-RING JOINT TORIQUE	1	1				

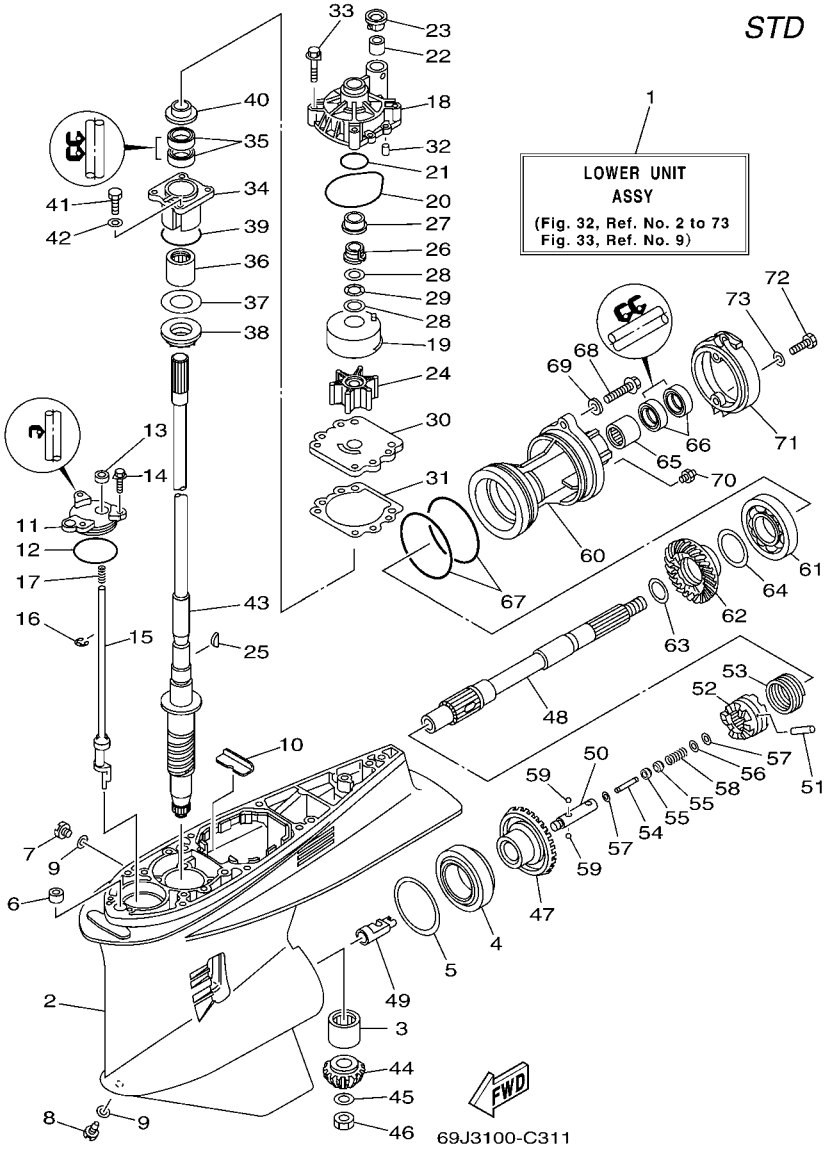

FIG. 32 LOWER CASING & DRIVE 1 BOITIER D'HELICE TRANSMISSION 1

REF. NO.	PART NO. N° PIECES	DESCRIPTION DESCRIPTION	69J3	60L3	69K3	60M3		REMARKS REMARQUES
21	93210–37160	O-RING JOINT TORIQUE	1	1				
22	6E5–44365–00	DAMPER, WATER SEAL JOINT, TUBE D'EAU	1	1				
23	6E5–44312–00	COVER, WATER PUMP HOUSING COUVERCLE	1	1				
24	6E5–44352–01	IMPELLER TURBINE	1	1				
25	90280–04M05	KEY, WOODRUFF CLAVETTE, DEMI-LUNE	1	1				
26	61A–45538–00	SPACER 1 ENTRETOISE	1	1				
27	61A–45527–00	COLLAR, DRIVE SHAFT ENTRETOISE	1	1				
28	90201–22M01	WASHER, PLATE RONDELLE, PLATE	2	2				
29	90206–22M19	WASHER, WAVE RONDELLE, ONDULEE	1	1				
30	6G5–44323–00	OUTER PLATE, CARTRIDGE PLAQUE EXTERIEURE	1	1				
31	6E5–44315–A0	GASKET, WATER PUMP JOINT, POMPE A EAU	1	1				
32	93606–12019	PIN, DOWEL GOUPILLE	2	2				
33	90119–08M14	BOLT, WITH WASHER BOULON, AVEC RONDELLE	4	4				
34	61A–45331–00–94	HOUSING, BEARING FLASQUE, ROULEMENT	1	1				
35	93101–28M16	OIL SEAL JOINT SPY	2	2				
36	93317–330U2	BEARING ROULEMENT	1	1				
37	61A–45587–00–10	SHIM (T:0.10MM) CALE (T:0.10MM)	1	1				UR UR
	61A–45587–00–12	SHIM (T:0.12MM) CALE (T:0.12MM)	1	1				UR UR
	61A–45587–00–15	SHIM (T:0.15MM) CALE (T:0.15MM)	1	1				UR UR
	61A–45587–00–18	SHIM (T:0.18MM) CALE (T:0.18MM)	1	1				UR UR
	61A–45587–00–30	SHIM (T:0.30MM) CALE (T:0.30MM)	1	1				UR UR
	61A–45587–00–40	SHIM (T:0.40MM) CALE (T:0.40MM)	1	1				UR UR
	61A–45587–00–50	SHIM (T:0.50MM) CALE (T:0.50MM)	1	1				UR UR
38	93341–930U9	BEARING CERVEAUX DE DIRECTION	1	1				
39	93210–55M14	O-RING JOINT TORIQUE	1	1				
40	6E5–45344–00	COVER, OIL SEAL FLASQE, JOINT D'HUILE	1	1				
41	97095–08025	BOLT BOULON	4	4				

FIG. 32 LOWER CASING & DRIVE 1 BOITIER D'HELICE TRANSMISSION 1

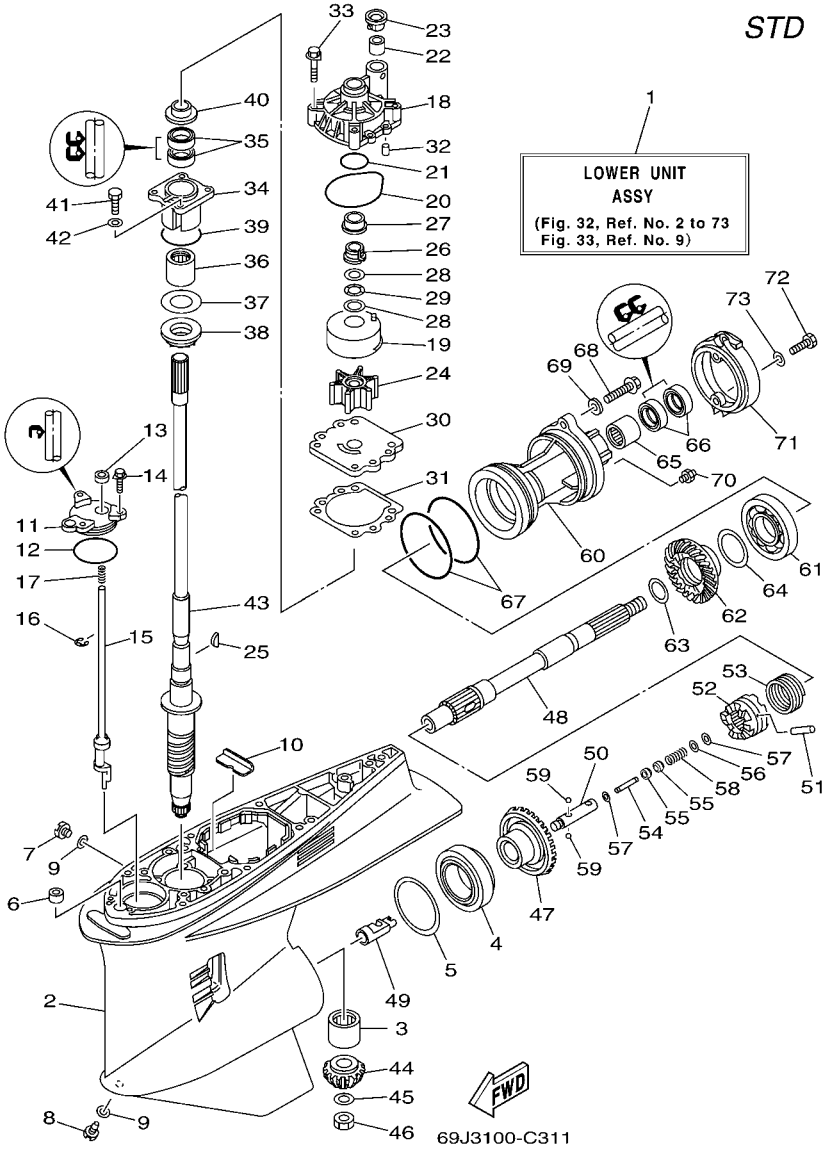

REF. NO.	PART NO. N° PIECES	DESCRIPTION DESCRIPTION	69J3	60L3	69K3	60M3		REMARKS REMARQUES
42	92995–08600	WASHER RONDELLE	4	4				
43	69J–45501–00	DRIVE SHAFT COMP. ARBRE MOTEUR COMP.	1	1				X X
	61A–45501–30	DRIVE SHAFT COMP. ARBRE MOTEUR COMP.	1					U U
44	69J–45551–00	PINION PIGNON D'ATTAQUE	1	1				
45	90201–16M00	WASHER, PLATE RONDELLE, PLATE	1	1				
46	90170–16M19	NUT ECROU	1	1				
47	69J–45560–00	GEAR PIGNON	1	1				
48	69J–45611–00	SHAFT, PROPELLER ARBRE, HELICE	1	1				
49	61A–45641–02	SHIFTER EMBRAYAGE	1	1				
50	61A–45634–01	SLIDE, SHIFT CONTRE-POUSSOIR	1	1				
51	61A–45632–00	PIN, CROSS GOUPILLE DE CRABOT	1	1				
52	69J–45631–00	CLUTCH, DOG CRABOT	1	1				
53	61A–45633–00	RING, CROSS PIN JONC, GOUPILLE CRABOT	1	1				
54	6H1–45668–00	SHAFT, FREE AXE	1	1				
55	61A–45635–00	PLUNGER, SHIFT POUSSOIR D'EMBRAYAGE	2	2				
56	90201–02M00	WASHER, PLATE RONDELLE, PLATE	1	1				
57	90183–02M03	NUT, SPRING ECROU, RESSORT	2	2				
58	90501–10M77	SPRING, COMPRESSION RESSORT, COMPRESSION	1	1				
59	93501–04011	BALL BILLE	2	2				
60	69J–45332–00–94	HOUSING, BEARING FLASQUE, ROULEMENT	1	1				
61	93306–210U0	BEARING ROULEMENT	1	1				
62	69J–45571–00	GEAR PIGNON	1	1				
63	90201–31M00	WASHER, PLATE RONDELLE, PLATE	1	1				
64	61A–45577–00–10	SHIM (T:0.10MM) CALE (T:0.10MM)	1	1				UR UR
	61A–45577–00–12	SHIM (T:0.12MM) CALE (T:0.12MM)	1	1				UR UR
	61A–45577–00–15	SHIM (T:0.15MM) CALE (T:0.15MM)	1	1				UR UR
	61A–45577–00–18	SHIM (T:0.18MM) CALE (T:0.18MM)	1	1				UR UR

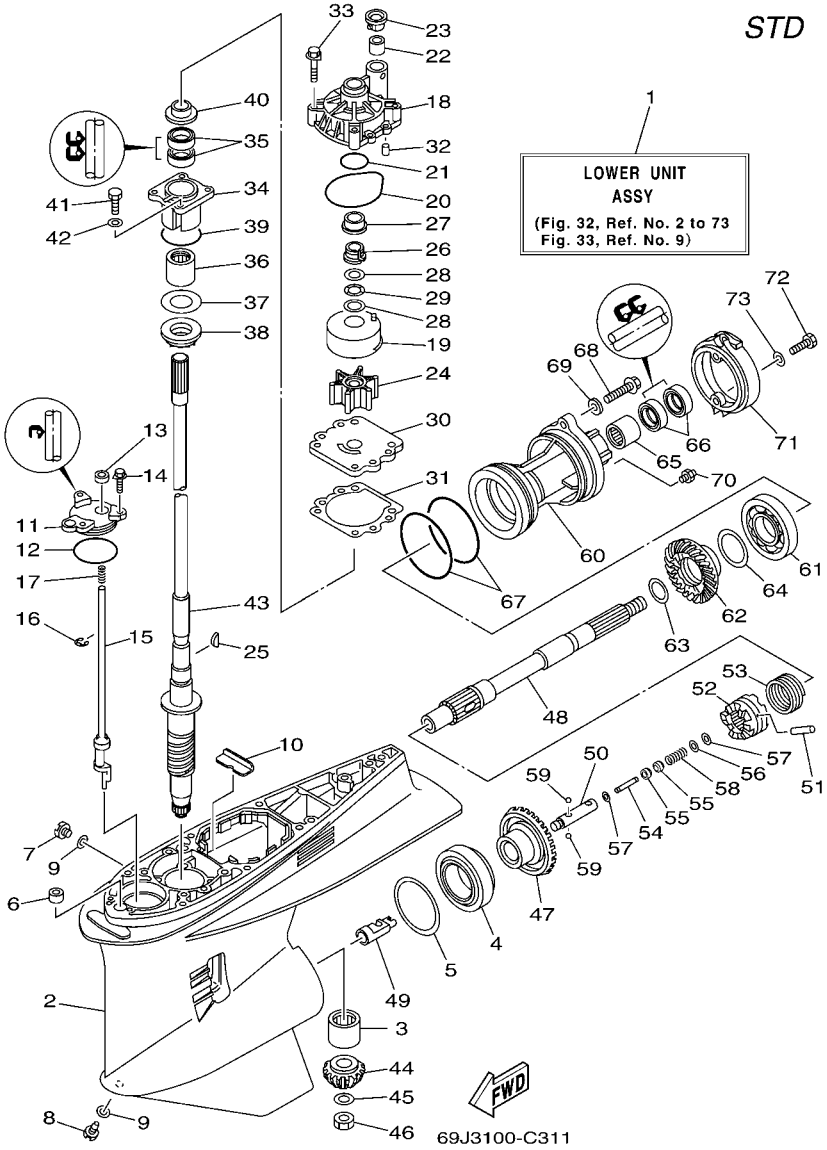

FIG. 32 LOWER CASING & DRIVE 1 BOITIER D'HELICE TRANSMISSION 1

REF. NO.	PART NO. N° PIECES	DESCRIPTION DESCRIPTION	69J3	60L3	69K3	60M3		REMARKS REMARQUES
64	61A–45577–00–30	SHIM (T:0.30MM) CALE (T:0.30MM)	1	1				UR UR
	61A–45577–00–40	SHIM (T:0.40MM) CALE (T:0.40MM)	1	1				UR UR
	61A–45577–00–50	SHIM (T:0.50MM) CALE (T:0.50MM)	1	1				UR UR
65	93315–43061	BEARING ROULEMENT	1	1				
66	93101–30M17	OIL SEAL JOINT SPY	2	2				
67	93211–04384	O-RING JOINT TORIQUE	2	2				
68	90105–08036	BOLT, FLANGE BOULON	2	2				
69	90201–08023	WASHER, PLATE RONDELLE, PLATE	2	2				
70	93700–09M00	NIPPLE, GREASE PION	1	1				
71	69J–45361–00–8D	CAP, LOWER CASING COUVERCLE, BOITIER D'HELICE	1	1				
72	97095–08020	BOLT BOULON	2	2				
73	92995–08600	WASHER RONDELLE	2	2				

FIG. 33 LOWER CASING & DRIVE 2 BOITIER D'HELICE TRANSMISSION 2

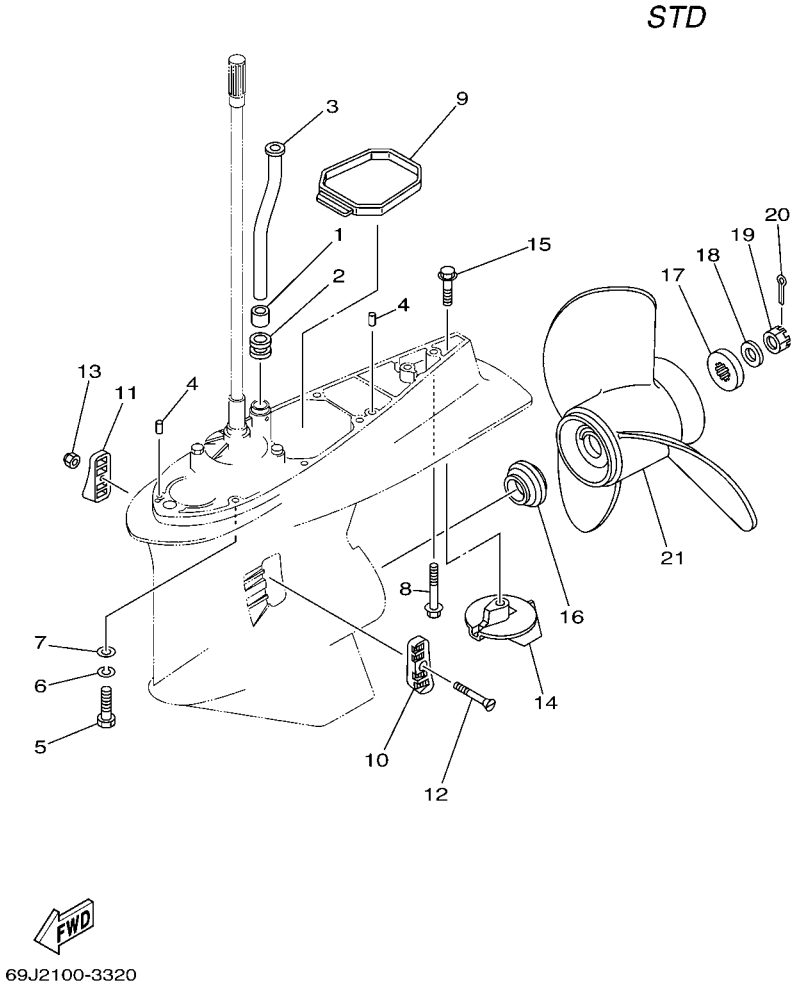

REF. NO.	PART NO. N° PIECES	DESCRIPTION DESCRIPTION	69J3	60L3	69K3	60M3		REMARKS REMARQUES
1	6E5–44365–00	DAMPER, WATER SEAL JOINT, TUBE D'EAU	1	1				
2	6E5–44366–00	DAMPER, WATER SEAL JOINT, TUBE D'EAU	1	1				
3	69J–44361–00	TUBE, WATER TUBE D'EAU	1	1				X X
	69J–44361–10	TUBE, WATER TUBE D'EAU	1					U U
4	93608–12M05	PIN, DOWEL AXE	2	2				
5	97095–10045	BOLT BOULON	7	7				X X
6	92995–10100	WASHER RONDELLE	7	7				X X
7	92995–10600	WASHER RONDELLE	7	7				X X
8	90119–10MA2	BOLT, WITH WASHER BOULON, AVEC RONDELLE	1	1				X X
	90119–10009	BOLT, WITH WASHER BOULON, AVEC RONDELLE	1					U U
9	69J–45375–00	DAMPER, SEAL BOURRELET, CAOUTCHOUC	1	1				
10	61A–45214–10	COVER, WATER INLET GRILLE, ENTREE D'EAU	1	1				
11	61A–45215–10	COVER, WATER INLET GRILLE, ENTREE D'EAU	1	1				
12	90152–05003	SCREW, COUNTERSUNK VIS, TETE NOYEE	1	1				
13	90185–05002	NUT, SELF-LOCKING ECROU, AUTO-BLOCANT	1	1				
14	61A–45371–00	TAB-TRIM ANODE DERIVE	1	1				
15	90105–10M00	BOLT, FLANGE BOULON	1	1				
16	69J–45987–00	SPACER ENTRETOISE	1	1				
17	688–45997–01	SPACER ENTRETOISE	1	1				
18	92990–18200	WASHER RONDELLE, PLATE	1	1				
19	90171–18M04	NUT, CASTLE ECROU, CRENELE	1	1				
20	91490–40030	PIN, COTTER GOUPILLE	1	1				
21	6G5–45970–02–98	PROPELLER (3X15-1/4"X15"-M) HELICE (3X15-1/4"X15"-M)	1	1				UR UR
	6G5–45972–02–98	PROPELLER (3X13-3/4"X21"-M) HELICE (3X13-3/4"X21"-M)	1	1				UR UR
	6G5–45974–03–98	PROPELLER (3X13-3/4"X19"-M2) HELICE (3X13-3/4"X19"-M2)	1	1				UR UR
	6G5–45978–03–98	PROPELLER (3X13-3/4"X17"-M2) HELICE (3X13-3/4"X17"-M2)	1	1				UR UR
	61A–45972–00–98	PROPELLER (3X14-1/2"X21"-T) HELICE (3X14-1/2"X21"-T)	1	1				UR UR

FIG. 33 LOWER CASING & DRIVE 2 BOITIER D'HELICE TRANSMISSION 2

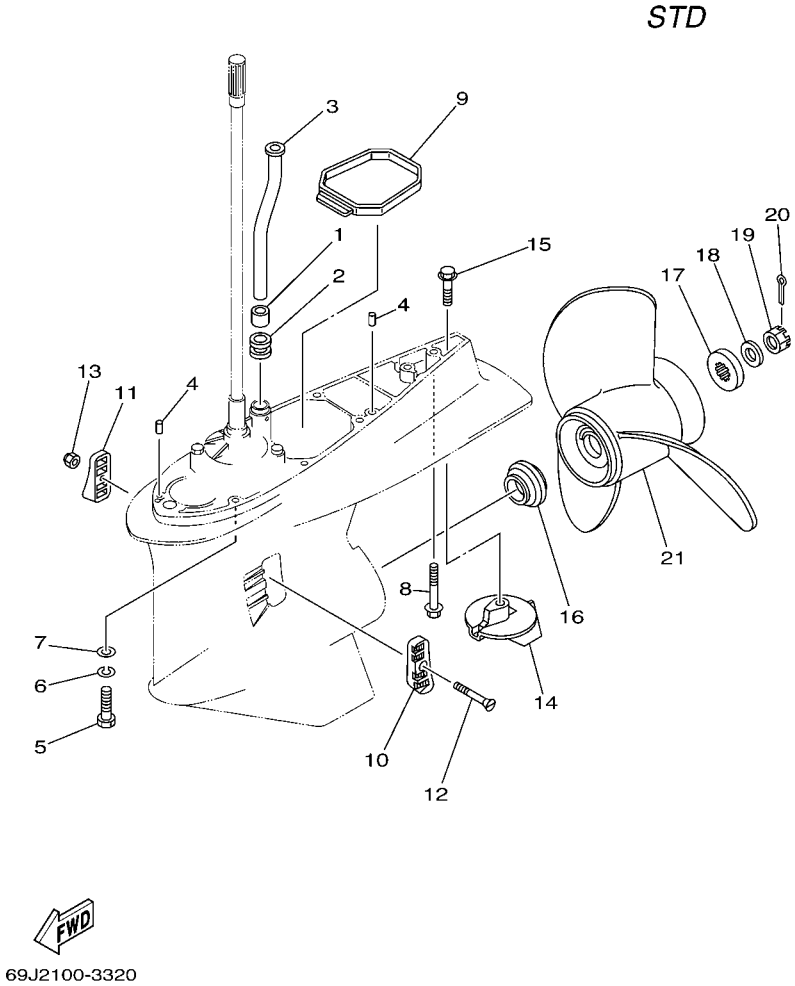

REF. NO.	PART NO. N° PIECES	DESCRIPTION DESCRIPTION	69J3	60L3	69K3	60M3		REMARKS REMARQUES
21	61A–45974–00–98	PROPELLER (3X14-1/2"X19"-T) HELICE (3X14-1/2"X19"-T)	1	1				UR UR
	61A–45978–00–98	PROPELLER (3X15"X17"-T) HELICE (3X15"X17"-T)	1	1				UR UR
	6R4–45970–A0	PROPELLER (3X15-1/4"X19"-M) HELICE (3X15-1/4"X19"-M)	1	1				UR UR
	6R4–45972–A0	PROPELLER (3X14-7/8"X21"-M) HELICE (3X14-7/8"X21"-M)	1	1				UR UR
	6R4–45974–A0	PROPELLER (3X14-1/2"X23"-M) HELICE (3X14-1/2"X23"-M)	1	1				UR UR
	6R4–45976–A0	PROPELLER (3X14-1/2"X15"-M) HELICE (3X14-1/2"X15"-M)	1	1				UR UR
	6R4–45978–A0	PROPELLER (3X15-1/4"X17"-M) HELICE (3X15-1/4"X17"-M)	1	1				UR UR
	66K–45974–B0	PROPELLER (3X14-1/2"X23"-M2) HELICE (3X14-1/2"X23"-M2)	1	1				UR UR

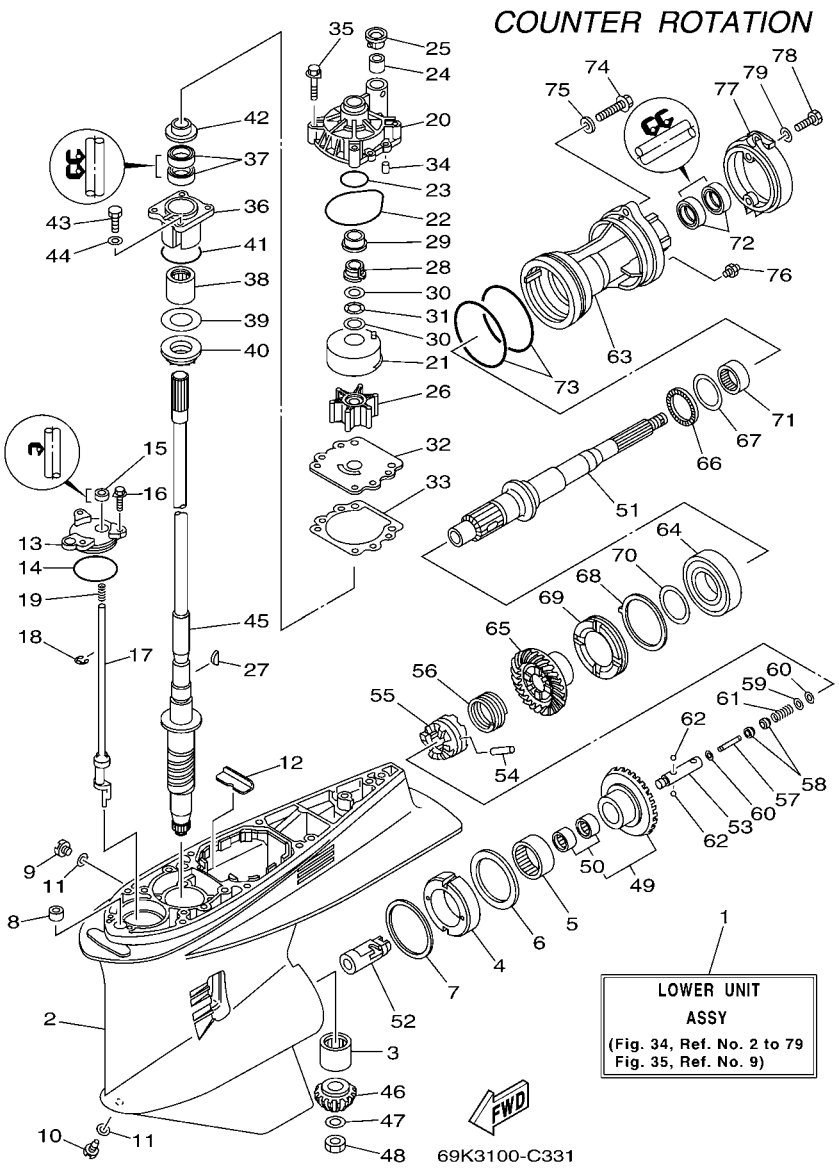

FIG. 34 LOWER CASING & DRIVE 3 — BOITIER D'HELICE TRANSMISSION 3

REF. NO.	PART NO. N° PIECES	DESCRIPTION DESCRIPTION	69J3	60L3	69K3	60M3		REMARKS REMARQUES
1	69K–45300–21–8D	LOWER UNIT ASSY UNITE INFERIEURE (ENS.)			1	1		X X
2	61A–45301–10–8D	CASING, LOWER BEQUILLE			1	1		
3	93311–832V2	BEARING ROULEMENT			1	1		
4	61B–45538–01	SPACER 1 ENTRETOISE			1	1		
5	93315–660W3	BEARING ROULEMENT			1	1		
6	93341–670V0	BEARING CERVEAUX DE DIRECTION			1	1		
7	61A–45567–00–10	SHIM (T:0.10MM) CALE (T:0.10MM)			1	1		UR UR
	61A–45567–00–12	SHIM (T:0.12MM) CALE (T:0.12MM)			1	1		UR UR
	61A–45567–00–15	SHIM (T:0.15MM) CALE (T:0.15MM)			1	1		UR UR
	61A–45567–00–18	SHIM (T:0.18MM) CALE (T:0.18MM)			1	1		UR UR
	61A–45567–00–30	SHIM (T:0.30MM) CALE (T:0.30MM)			1	1		UR UR
	61A–45567–00–40	SHIM (T:0.40MM) CALE (T:0.40MM)			1	1		UR UR
	61A–45567–00–50	SHIM (T:0.50MM) CALE (T:0.50MM)			1	1		UR UR
8	663–44366–00	DAMPER, WATER SEAL JOINT, TUBE D'EAU			1	1		
9	90340–08002	PLUG, STRAIGHT SCREW PLOT, FILETE DROIT			1	1		
10	688–45341–10	PLUG, DRAIN BOUCHON DE VIDANGE			1	1		
11	90430–08020	GASKET JOINT			2	2		
12	61A–45376–00–94	GUIDE, SEAL DAMPER BUTEE, JOINT CAOUTCHOUC			1	1		
13	61A–45321–01	PLATE PLAQUETTE			1	1		
14	93210–64488	O-RING JOINT TORIQUE			1	1		
15	93106–09014	OIL SEAL JOINT SPY			1	1		
16	90119–06M10	BOLT, WITH WASHER BOULON, AVEC RONDELLE			3	3		
17	69K–44150–00	SHIFT CAM ASSY CAME D'INVERSION			1	1		
18	99001–08600	CIRCLIP CIRCLIP			1	1		
19	90501–11M10	SPRING, COMPRESSION RESSORT, COMPRESSION			1	1		
20	61A–44311–01	HOUSING, WATER PUMP CORPS, POMPE A EAU			1	1		
21	61A–44322–02	INSERT, CARTRIDGE CUVETTE			1	1		

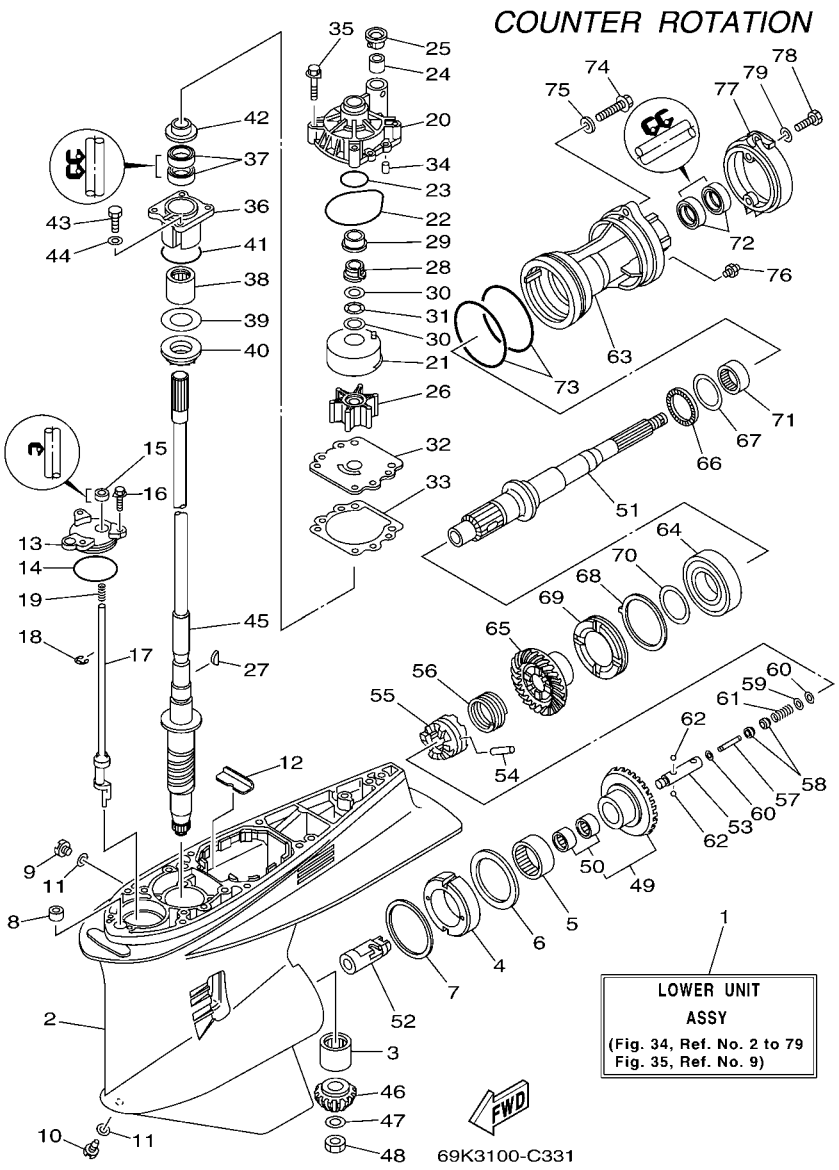

FIG. 34 LOWER CASING & DRIVE 3 BOITIER D'HELICE TRANSMISSION 3

REF. NO.	PART NO. N° PIECES	DESCRIPTION DESCRIPTION	69J3	60L3	69K3	60M3		REMARKS REMARQUES
22	93210–86M38	O-RING JOINT TORIQUE			1	1		
23	93210–37160	O-RING JOINT TORIQUE			1	1		
24	6E5–44365–00	DAMPER, WATER SEAL JOINT, TUBE D'EAU			1	1		
25	6E5–44312–00	COVER, WATER PUMP HOUSING COUVERCLE			1	1		
26	6E5–44352–01	IMPELLER TURBINE			1	1		
27	90280–04M05	KEY, WOODRUFF CLAVETTE, DEMI-LUNE			1	1		
28	61A–45538–00	SPACER 1 ENTRETOISE			1	1		
29	61A–45527–00	COLLAR, DRIVE SHAFT ENTRETOISE			1	1		
30	90201–22M01	WASHER, PLATE RONDELLE, PLATE			2	2		
31	90206–22M19	WASHER, WAVE RONDELLE, ONDULEE			1	1		
32	6G5–44323–00	OUTER PLATE, CARTRIDGE PLAQUE EXTERIEURE			1	1		
33	6E5–44315–A0	GASKET, WATER PUMP JOINT, POMPE A EAU			1	1		
34	93606–12019	PIN, DOWEL GOUPILLE			2	2		
35	90119–08M14	BOLT, WITH WASHER BOULON, AVEC RONDELLE			4	4		
36	61A–45331–00–94	HOUSING, BEARING FLASQUE, ROULEMENT			1	1		
37	93101–28M16	OIL SEAL JOINT SPY			2	2		
38	93317–330U2	BEARING ROULEMENT			1	1		
39	61A–45587–00–10	SHIM (T:0.10MM) CALE (T:0.10MM)			1	1		UR UR
	61A–45587–00–12	SHIM (T:0.12MM) CALE (T:0.12MM)			1	1		UR UR
	61A–45587–00–15	SHIM (T:0.15MM) CALE (T:0.15MM)			1	1		UR UR
	61A–45587–00–18	SHIM (T:0.18MM) CALE (T:0.18MM)			1	1		UR UR
	61A–45587–00–30	SHIM (T:0.30MM) CALE (T:0.30MM)			1	1		UR UR
	61A–45587–00–40	SHIM (T:0.40MM) CALE (T:0.40MM)			1	1		UR UR
	61A–45587–00–50	SHIM (T:0.50MM) CALE (T:0.50MM)			1	1		UR UR
40	93341–930U9	BEARING CERVEAUX DE DIRECTION			1	1		
41	93210–55M14	O-RING JOINT TORIQUE			1	1		
42	6E5–45344–00	COVER, OIL SEAL FLASQE, JOINT D'HUILE			1	1		

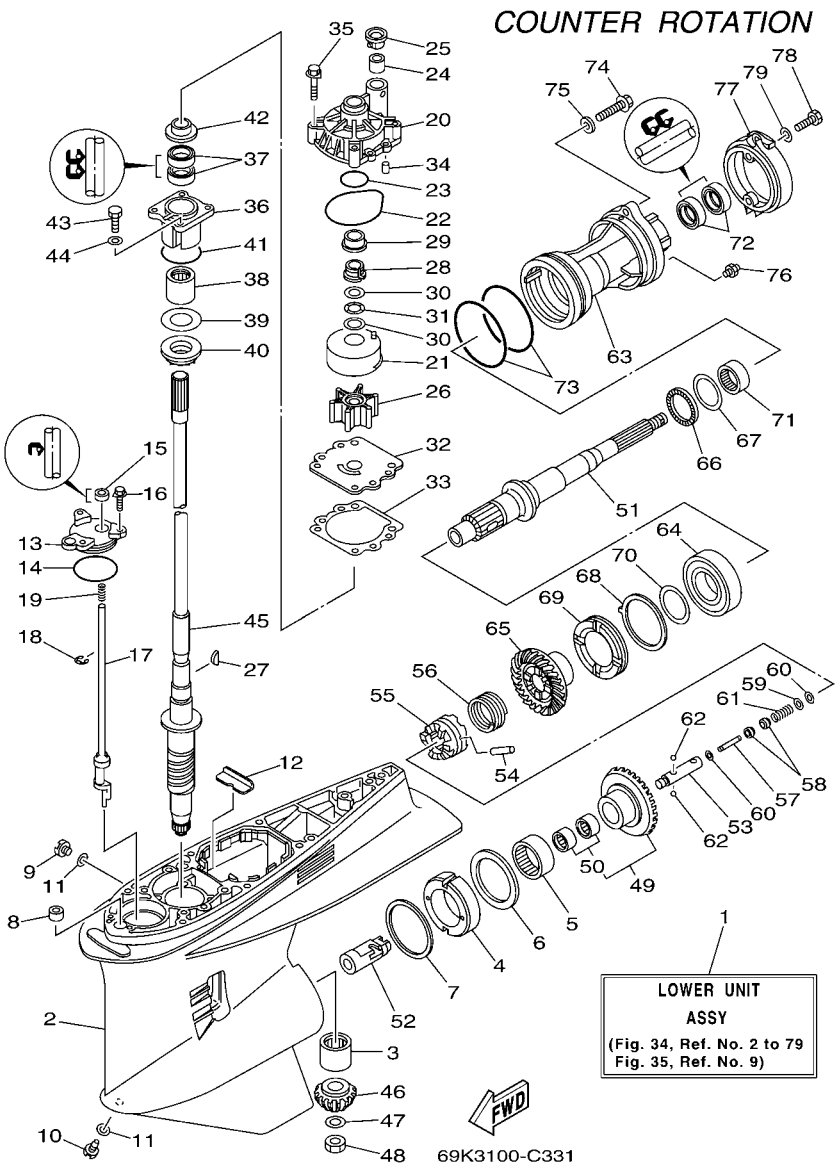

FIG. 34 LOWER CASING & DRIVE 3 BOITIER D'HELICE TRANSMISSION 3

REF. NO.	PART NO. N° PIECES	DESCRIPTION DESCRIPTION	69J3	60L3	69K3	60M3		REMARKS REMARQUES
43	97095–08025	BOLT BOULON			4	4		
44	92995–08600	WASHER RONDELLE			4	4		
45	69J–45501–00	DRIVE SHAFT COMP. ARBRE MOTEUR COMP.			1	1		X X
46	69J–45551–00	PINION PIGNON D'ATTAQUE			1	1		
47	90201–16M00	WASHER, PLATE RONDELLE, PLATE			1	1		
48	90170–16M19	NUT ECROU			1	1		
49	69K–45560–00	GEAR PIGNON			1	1		
50	93317–428U7	.BEARING .ROULEMENT			2	2		
51	69K–45611–00	SHAFT, PROPELLER ARBRE, HELICE			1	1		
52	61B–45641–01	SHIFTER EMBRAYAGE			1	1		
53	61A–45634–01	SLIDE, SHIFT CONTRE-POUSSOIR			1	1		
54	61A–45632–00	PIN, CROSS GOUPILLE DE CRABOT			1	1		
55	69J–45631–00	CLUTCH, DOG CRABOT			1	1		
56	61A–45633–00	RING, CROSS PIN JONC, GOUPILLE CRABOT			1	1		
57	6H1–45668–00	SHAFT, FREE AXE			1	1		
58	61A–45635–00	PLUNGER, SHIFT POUSSOIR D'EMBRAYAGE			2	2		
59	90201–02M00	WASHER, PLATE RONDELLE, PLATE			1	1		
60	90183–02M03	NUT, SPRING ECROU, RESSORT			2	2		
61	90501–10M77	SPRING, COMPRESSION RESSORT, COMPRESSION			1	1		
62	93501–04011	BALL BILLE			2	2		
63	69K–45332–00–94	HOUSING, BEARING FLASQUE, ROULEMENT			1	1		
64	93332–00048	BEARING ROULEMENT			1	1		
65	69K–45571–00	GEAR PIGNON			1	1		
66	93341–440U5	BEARING CERVEAUX DE DIRECTION			1	1		
67	6K1–45578–01–10	SHIM (T:0.10MM) CALE (T:0.10MM)			1	1		UR UR
	6K1–45578–01–12	SHIM (T:0.12MM) CALE (T:0.12MM)			1	1		UR UR
	6K1–45578–01–15	SHIM (T:0.15MM) CALE (T:0.15MM)			1	1		UR UR

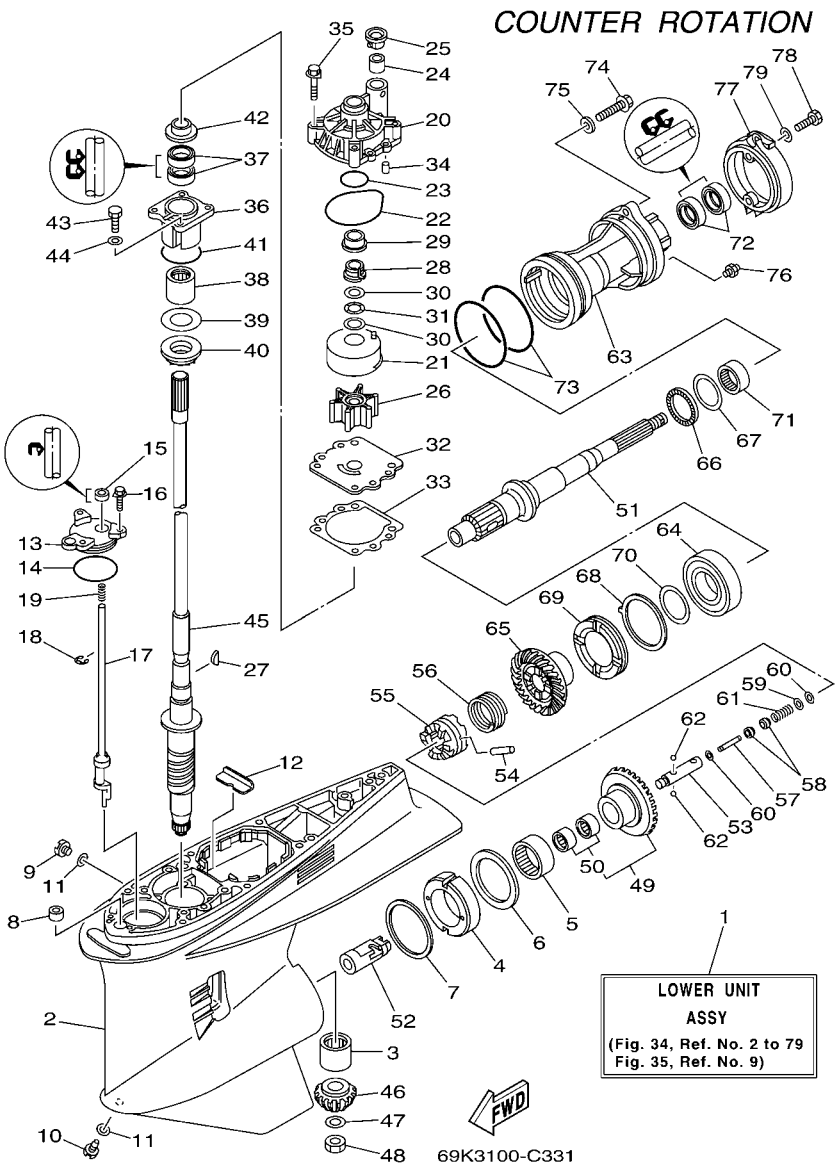

FIG. 34 LOWER CASING & DRIVE 3 — BOITIER D'HELICE TRANSMISSION 3

REF. NO.	PART NO. N° PIECES	DESCRIPTION DESCRIPTION	69J3	60L3	69K3	60M3		REMARKS REMARQUES
67	6K1–45578–01–18	SHIM (T:0.18MM) CALE (T:0.18MM)			1	1		UR UR
	6K1–45578–01–30	SHIM (T:0.30MM) CALE (T:0.30MM)			1	1		UR UR
	6K1–45578–01–40	SHIM (T:0.40MM) CALE (T:0.40MM)			1	1		UR UR
	6K1–45578–01–50	SHIM (T:0.50MM) CALE (T:0.50MM)			1	1		UR UR
68	61B–45383–00	WASHER, CLAW FREIN D'ECROU			1	1		
69	69K–45384–00	NUT ECROU			1	1		
70	69K–45577–00	SHIM (T:0.10MM) CALE (T:0.10MM)			1	1		UR UR
	69K–45577–10	SHIM (T:0.12MM) CALE (T:0.12MM)			1	1		UR UR
	69K–45577–20	SHIM (T:0.15MM) CALE (T:0.15MM)			1	1		UR UR
	69K–45577–30	SHIM (T:0.18MM) CALE (T:0.18MM)			1	1		UR UR
	69K–45577–40	SHIM (T:0.30MM) CALE (T:0.30MM)			1	1		UR UR
	69K–45577–50	SHIM (T:0.40MM) CALE (T:0.40MM)			1	1		UR UR
	69K–45577–60	SHIM (T:0.50MM) CALE (T:0.50MM)			1	1		UR UR
71	93315–43061	BEARING ROULEMENT			1	1		
72	93101–30M17	OIL SEAL JOINT SPY			2	2		
73	93211–04384	O-RING JOINT TORIQUE			2	2		
74	90105–08036	BOLT, FLANGE BOULON			2	2		
75	90201–08023	WASHER, PLATE RONDELLE, PLATE			2	2		
76	93700–09M00	NIPPLE, GREASE PION			1	1		
77	69J–45361–00–8D	CAP, LOWER CASING COUVERCLE, BOITIER D'HELICE			1	1		
78	97095–08020	BOLT BOULON			2	2		
79	92995–08600	WASHER RONDELLE			2	2		

FIG. 35 LOWER CASING & DRIVE 4 BOITIER D'HELICE TRANSMISSION 4

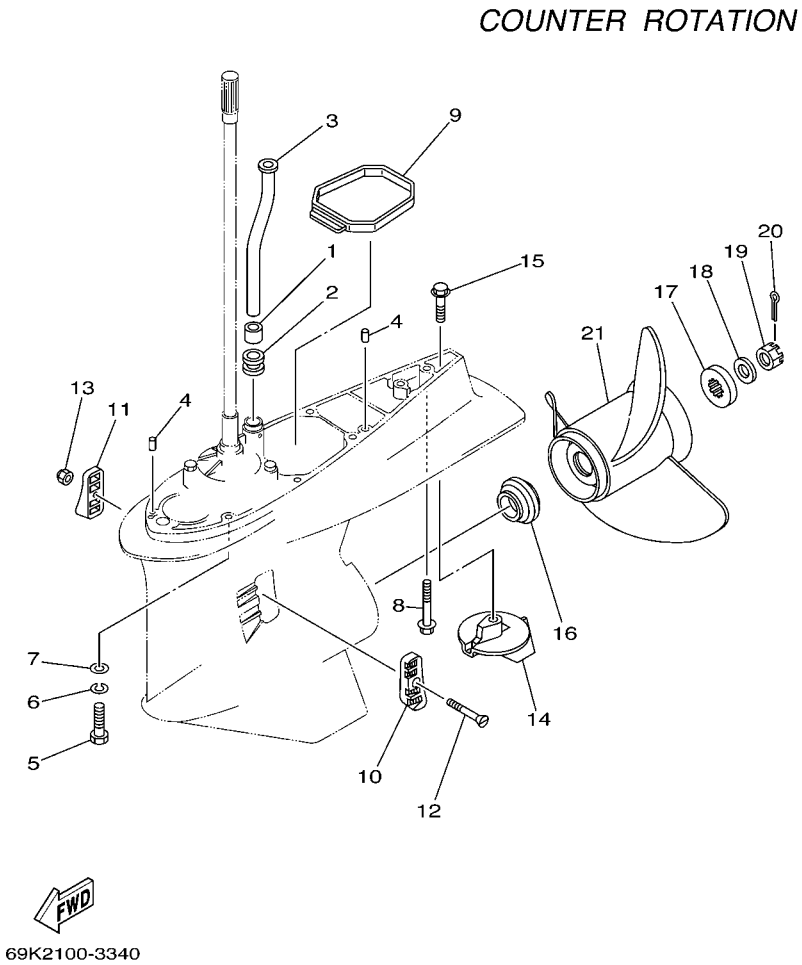

REF. NO.	PART NO. N° PIECES	DESCRIPTION DESCRIPTION	69J3	60L3	69K3	60M3		REMARKS REMARQUES
1	6E5–44365–00	DAMPER, WATER SEAL JOINT, TUBE D'EAU			1	1		
2	6E5–44366–00	DAMPER, WATER SEAL JOINT, TUBE D'EAU			1	1		
3	69J–44361–00	TUBE, WATER TUBE D'EAU			1	1		X X
4	93608–12M05	PIN, DOWEL AXE			2	2		
5	97095–10045	BOLT BOULON			7	7		X X
6	92995–10100	WASHER RONDELLE			7	7		X X
7	92995–10600	WASHER RONDELLE			7	7		X X
8	90119–10MA2	BOLT, WITH WASHER BOULON, AVEC RONDELLE			1	1		X X
9	69J–45375–00	DAMPER, SEAL BOURRELET, CAOUTCHOUC			1	1		
10	61A–45214–10	COVER, WATER INLET GRILLE, ENTREE D'EAU			1	1		
11	61A–45215–10	COVER, WATER INLET GRILLE, ENTREE D'EAU			1	1		
12	90152–05003	SCREW, COUNTERSUNK VIS, TETE NOYEE			1	1		
13	90185–05002	NUT, SELF-LOCKING ECROU, AUTO-BLOCANT			1	1		
14	61A–45371–00	TAB-TRIM ANODE DERIVE			1	1		
15	90105–10M00	BOLT, FLANGE BOULON			1	1		
16	69J–45987–00	SPACER ENTRETOISE			1	1		
17	688–45997–01	SPACER ENTRETOISE			1	1		
18	92990–18200	WASHER RONDELLE, PLATE			1	1		
19	90171–18M04	NUT, CASTLE ECROU, CRENELE			1	1		
20	91490–40030	PIN, COTTER GOUPILLE			1	1		
21	6K1–45970–01–98	PROPELLER (3X15-1/4"X15"-ML) HELICE (3X15-1/4"X15"-ML)			1	1		UR UR
	6K1–45972–01–98	PROPELLER (3X13-3/4"X21"-ML) HELICE (3X13-3/4"X21"-ML)			1	1		UR UR
	6K1–45974–02–98	PROPELLER (3X13-3/4"X19"-ML1) HELICE (3X13-3/4"X19"-ML1)			1	1		UR UR
	6K1–45978–02–98	PROPELLER (3X13-3/4"X17"-ML1) HELICE (3X13-3/4"X17"-ML1)			1	1		UR UR
	61B–45972–00–98	PROPELLER (3X14-1/2"X21"-TL) HELICE (3X14-1/2"X21"-TL)			1	1		UR UR
	61B–45974–00–98	PROPELLER (3X14-1/2"X19"-TL) HELICE (3X14-1/2"X19"-TL)			1	1		UR UR
	61B–45978–00–98	PROPELLER (3X15"X17"-TL) HELICE (3X15"X17"-TL)			1	1		UR UR

FIG. 35 LOWER CASING & DRIVE 4 BOITIER D'HELICE TRANSMISSION 4

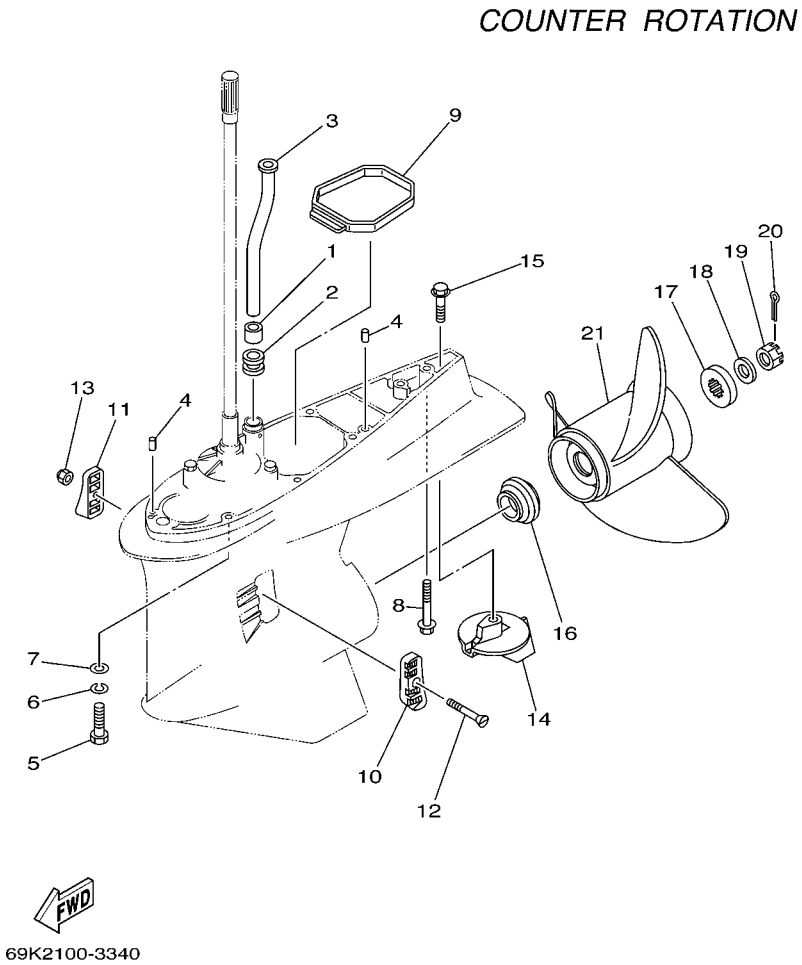

REF. NO.	PART NO. N° PIECES	DESCRIPTION DESCRIPTION	69J3	60L3	69K3	60M3		REMARKS REMARQUES
21	6R1–45970–A0	PROPELLER (3X15-1/4"X19"-ML) HELICE (3X15-1/4"X19"-ML)			1	1		UR UR
	6R1–45972–A0	PROPELLER (3X14-7/8"X21"-ML) HELICE (3X14-7/8"X21"-ML)			1	1		UR UR
	6R1–45974–A0	PROPELLER (3X14-1/2"X23"-ML) HELICE (3X14-1/2"X23"-ML)			1	1		UR UR
	6R1–45976–A0	PROPELLER (3X15-1/4"X15"-ML) HELICE (3X15-1/4"X15"-ML)			1	1		UR UR
	6R1–45978–A0	PROPELLER (3X15-1/4"X17"-ML) HELICE (3X15-1/4"X17"-ML)			1	1		UR UR

FIG. 36 STEERING GUIDE FIXATION DE DIRECTION

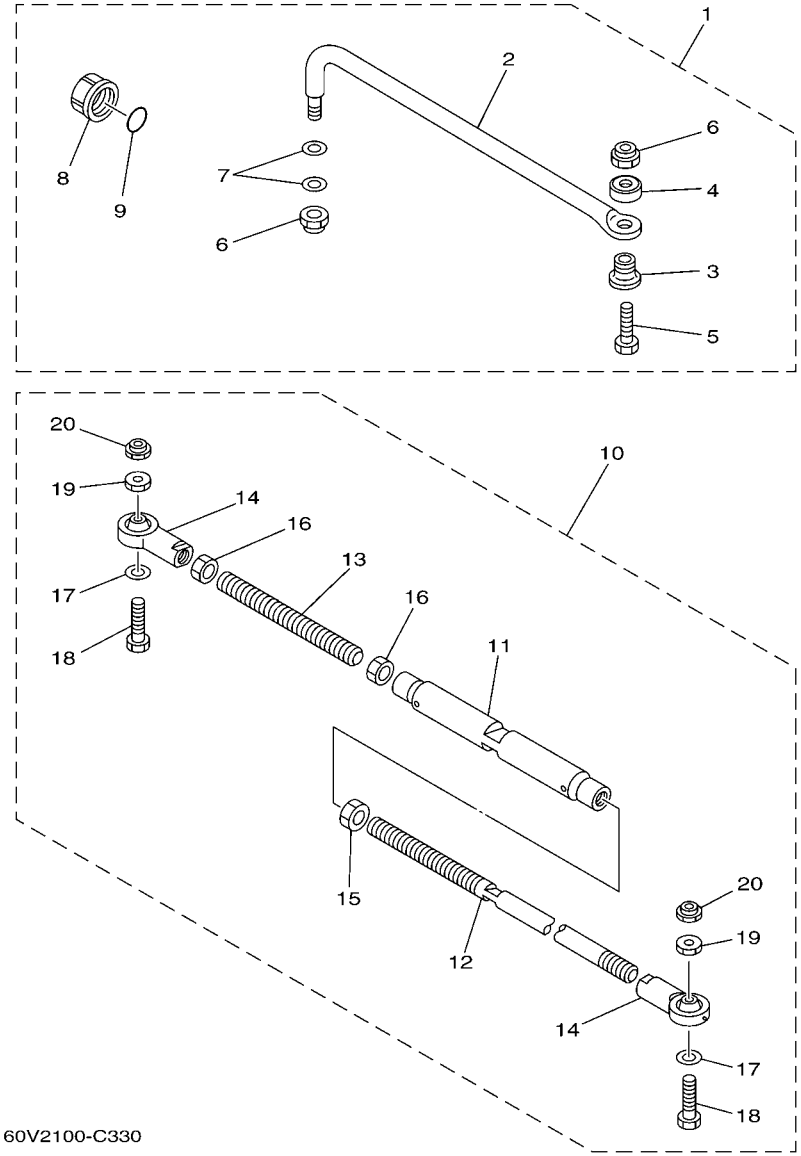

REF. NO.	PART NO. N° PIECES	DESCRIPTION DESCRIPTION	69J3	60L3	69K3	60M3		REMARKS REMARQUES
1	6E5–61350–02	STEERING GUIDE ATTACHMENT KIT FIXATIONS DE DIRECTION	1	1				AP AP
2	6E5–61351–01	.ROD, STEERING LINK .RENVOI DE DIRECTION	1	1				
3	90387–10M61	.COLLAR .COLLERETTE	1	1				
4	90560–12M01	.SPACER .ENTRETOISE	1	1				
5	6E5–61355–00	.BOLT .BOULON	1	1				
6	90185–09M01	.NUT, SELF-LOCKING .ECROU, AUTO-BLOCANT	2	2				
7	90201–10M20	.WASHER, PLATE .RONDELLE, PLATE	2	2				
8	6E5–43145–01	.CAP, CLAMP BRACKET .CAPUCHON, PRESSE	1	1				
9	93210–16275	.O-RING .JOINT TORIQUE	1	1				
10	6E5–61301–01	TWIN KIT (L:600-800MM) JUMELE KIT (L:600-800MM)			1	1		AP AP
11	6E5–61313–00	.ADJUSTER .TENDEUR			1	1		
12	6E5–61311–11	.TIE BAR .BARRE D'ACCOUPLEMENT			1	1		
13	6E5–61315–00	.TIE BAR .BARRE D'ACCOUPLEMENT			1	1		
14	6E5–61303–00	.STEERING EYE COMP. .AXE COMP.			2	2		
15	90170–14M06	.NUT .ECROU			1	1		
16	95380–14700	.NUT .ECROU			2	2		
17	90201–10M76	.WASHER, PLATE .RONDELLE, PLATE			2	2		
18	90101–09M70	.BOLT .BOULON			2	2		
19	90170–09M05	.NUT .ECROU			2	2		
20	90185–09M01	.NUT, SELF-LOCKING .ECROU, AUTO-BLOCANT			2	2		

FIG. 37 REMOTE CONTROL BOX BOITIER DE COMMANDE A DISTANCE

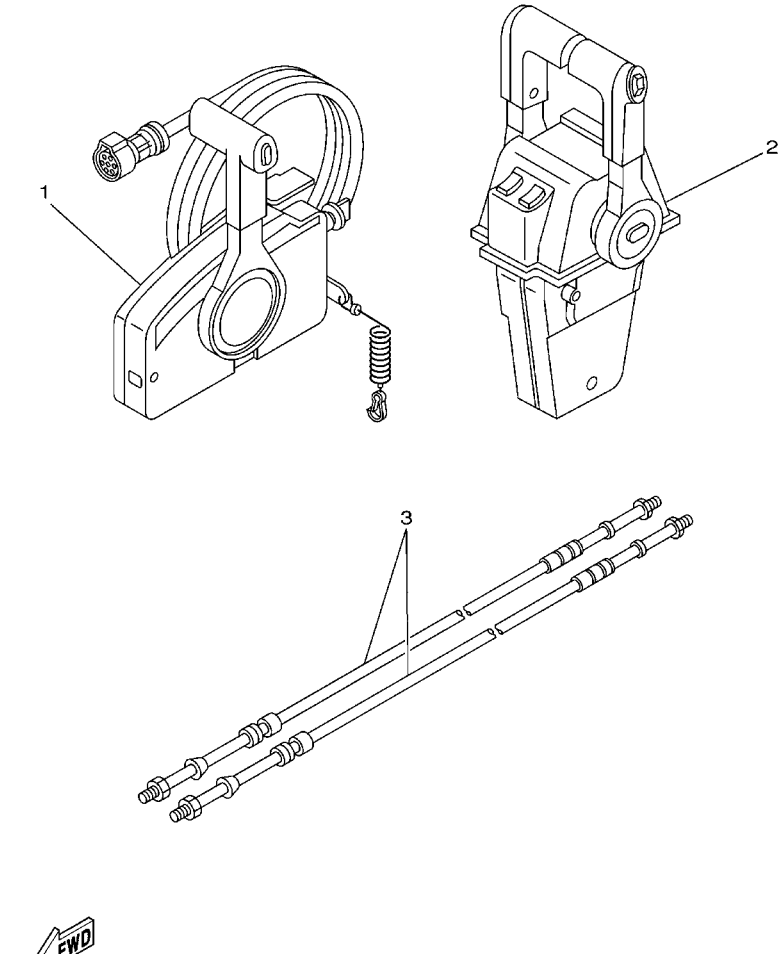

67H0100-9310

REF. NO.	PART NO. N° PIECES	DESCRIPTION DESCRIPTION	69J3	60L3	69K3	60M3		REMARKS REMARQUES
1	703–48205–17	REMOTE CONTROL ASSY (10P) BOITIER DE COMMANDE A DISTANCE	1	1				AP WITH PT/T SW. AP WITH PT/T SW.
2	704–48207–23	REMOTE CONTROL ASSY BOITIER DE COMMANDE A DISTANCE			1	1		AP WITH PT/T SW. AP WITH PT/T SW.
3	701–48320–50	CABLE, REMOTE CONTROL L=15F CABLE, COMMANDE A DISTANCE:15F	2	2	2	2		UR UR
	701–48320–60	CABLE, REMOTE CONTROL L=16F CABLE, COMMANDE A DISTANCE:16F	2	2	2	2		UR UR
	701–48320–80	CABLE, REMOTE CONTROL L=17F CABLE, COMMANDE A DISTANCE:17F	2	2	2	2		UR UR
	701–48320–40	CABLE, REMOTE CONTROL L=19F CABLE, COMMANDE A DISTANCE:19F	2	2	2	2		UR UR
	701–48350–00	CABLE, REMOTE CONTROL L=21F CABLE, COMMANDE A DISTANCE:21F	2	2	2	2		UR UR

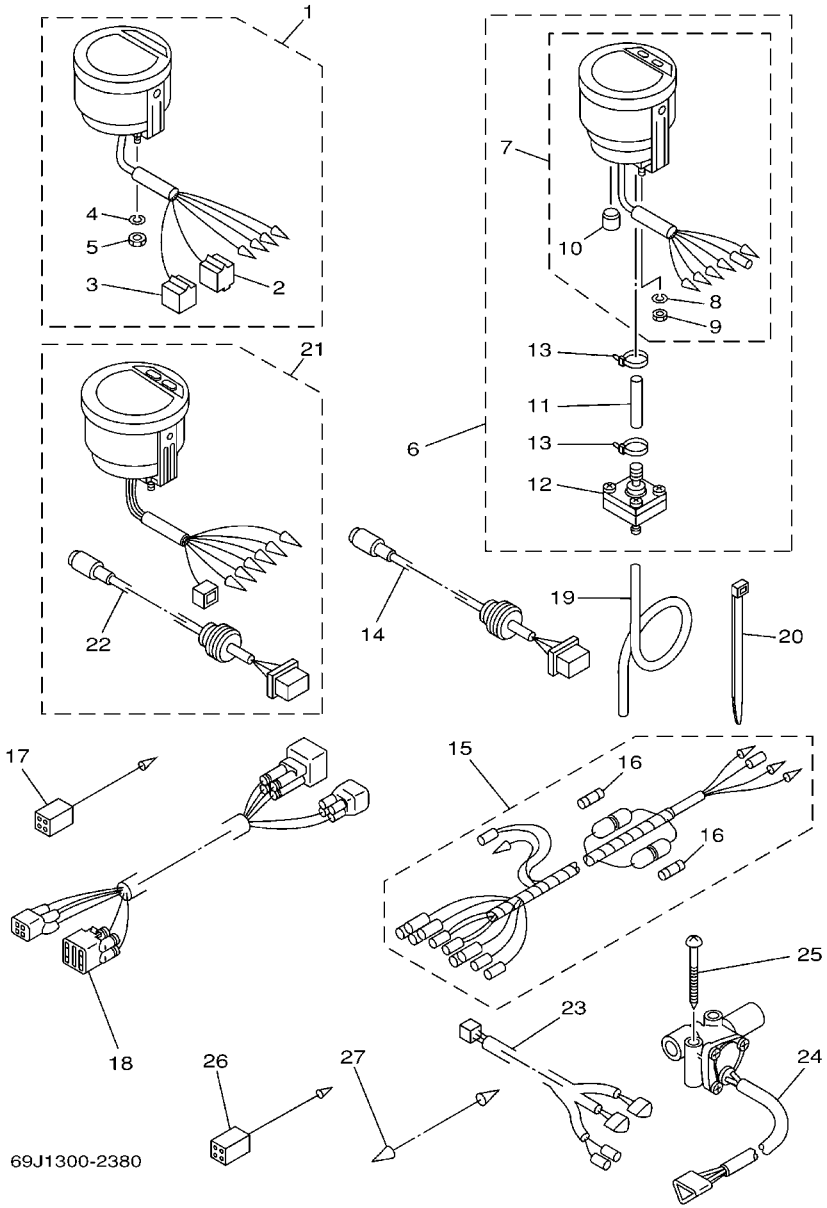

FIG. 38 METER COMPTEUR

REF. NO.	PART NO. N° PIECES	DESCRIPTION DESCRIPTION	69J3	60L3	69K3	60M3		REMARKS REMARQUES
1	6Y5–8350T–03	TACHOMETER ASSY COMPTE-TOURS CPLT	1	1	1	1		AP AP
2	9E450–04433	.CONNECTOR .CONNECTEUR	1	1	1	1		M-4-W M-4-W
3	9E450–04533	.CONNECTOR .CONNECTEUR	1	1	1	1		F-4-W F-4-W
4	92990–04100	.WASHER, SPRING .RONDELLE, GROWER	2	2	2	2		
5	95380–04600	.NUT .ECROU	2	2	2	2		
6	6Y5–83500–S5	DIGITAL SPEEDOMETER ASSY TACHYMETRE NUMERIQUE CPLT.	1	1				AP AP
7	6Y5–83570–S5	.SPEEDOMETER ASSY .COMPTEUR DE VITESSE CPLT	1	1				
8	92990–04100	..WASHER, SPRING ..RONDELLE, GROWER	2	2				
9	95380–04600	..NUT ..ECROU	2	2				
10	6Y5–83533–T2	..GROMMET ..RONDELLE CAOUTCHOUC	1	1				
11	6Y5–83557–31	.TUBE .TUBE	1	1				
12	6Y5–83728–00	.CONNECTOR ASSY .CONNEXION COMPLET	1	1				
13	90465–11M10	.CLAMP .BRIDE	2	2				
14	6Y5–87122–S0	CORD ASSY 1 COPDON COMPLET	1	1				AP AP
15	6Y5–83553–M0	WIRE, LEAD FIL	1	1				AP AP
	6Y5–83553–00	WIRE, LEAD FIL			1	1		AP AP
16	1E6–82151–00	.FUSE (10A) .FUSIBLE (10A)	2	2				FOR 6Y5-83553-M0 FOR 6Y5-83553-M0
	1E6–82151–00	.FUSE (10A) .FUSIBLE (10A)			1	1		FOR 6Y5-83553-00 FOR 6Y5-83553-00
17	6Y5–82117–00	WIRE, LEAD (BLACK) FIL (NOIR)	1	1				AP AP
18	68F–82553–80	EXTENSION, WIRE LEAD EXTENSION, FAISCEAU	1	1				AP AP
	68F–82553–90	EXTENSION, WIRE LEAD EXTENSION, FAISCEAU			1	1		AP AP
19	6Y5–83557–10	TUBE (8M) TUBE (8M)	1	1				AP AP
20	90465–11M10	CLAMP BRIDE	2	2				AP AP
21	6Y5–8350F–00	FUEL MANAGEMENT METER COMPT. DE GESTION DU CARBURANT			1	1		AP AP
22	6Y5–87122–S0	.CORD ASSY 1 .COPDON COMPLET			1	1		
23	6Y5–83553–F1	WIRE, LEAD FIL			1	1		AP AP
24	6Y5–85752–01	SENDER UNIT ASSY, FUEL METER PERCEPTION DE JAUGE A ESSENCE			2	2		AP AP

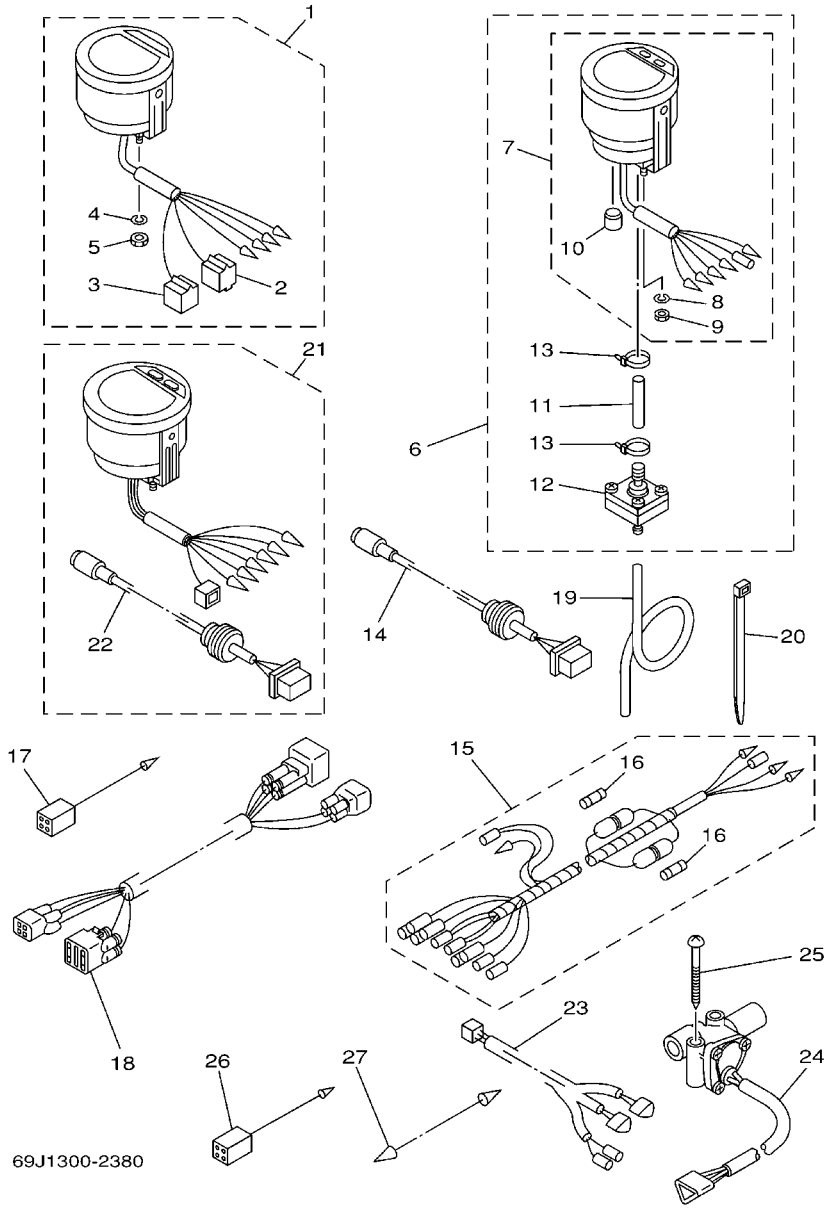

FIG. 38 METER COMPTEUR

REF. NO.	PART NO. N° PIECES	DESCRIPTION DESCRIPTION	69J3	60L3	69K3	60M3		REMARKS REMARQUES
25	90158–06002	SCREW, WOOD VIS, A BOIS			4	4		AP AP
26	6Y5–82117–00	WIRE, LEAD (BLACK) FIL (NOIR)			1	1		AP AP
27	703–82531–00	WIRE, LEAD FIL			1	1		AP AP

FIG. 39 SWITCH & PANEL — TABLEAU DE CONTACTEUR

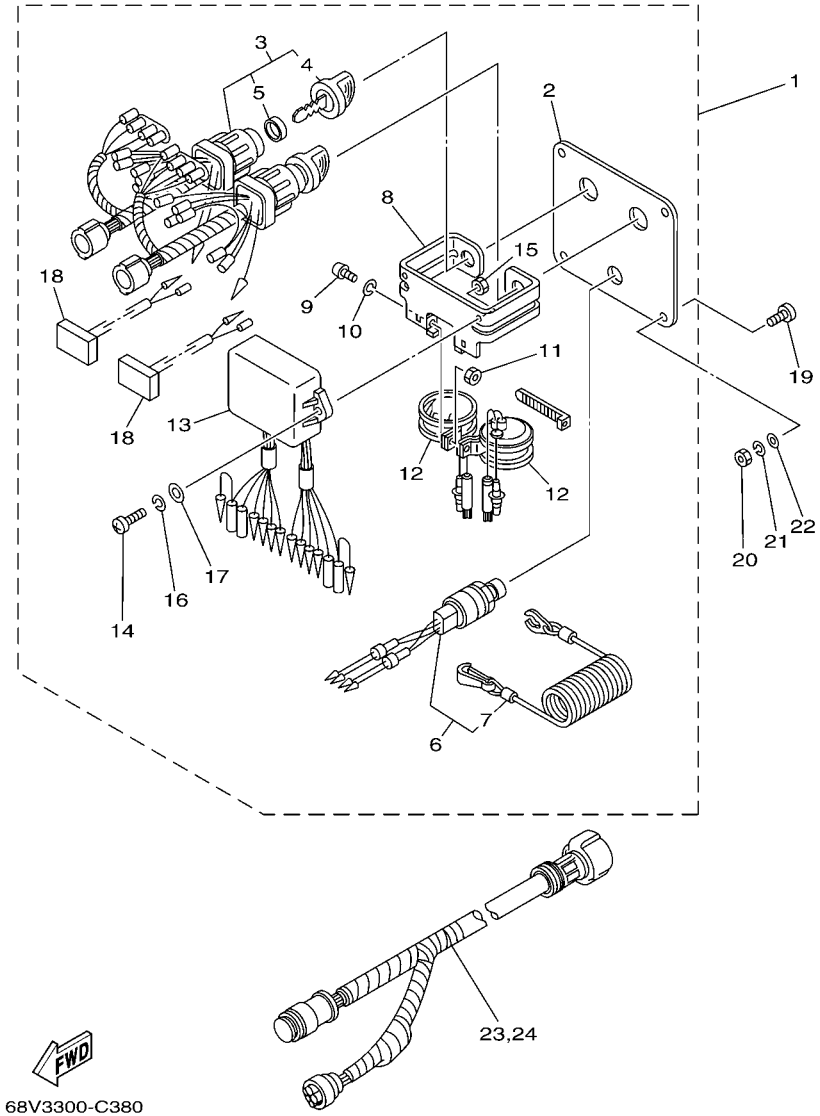

REF. NO.	PART NO. N° PIECES	DESCRIPTION DESCRIPTION	69J3	60L3	69K3	60M3		REMARKS REMARQUES
1	6K1–82570–07	PANEL SWITCH ASSY PLATINE D'INTERRUPEUR CPLT			1	1		AP AP
2	6K1–82571–01	.PANEL, SWITCH .TABLEAU, CONTACTEUR			1	1		
3	6K1–82510–06	.MAIN SWITCH ASSY .CONTACTEUR A CLEF COMPLET			2	2		
4	703–82577–00	..CAP, KEY ..CABOCHON			1	1		
5	6K1–82532–00	..CAP ..COUVERCLE			1	1		
6	6K1–82575–00	.ENGINE STOP SWITCH ASSY .COUPE CIRCUIT CPLT			1	1		
7	682–82556–00	..STOPPER ..PLAQUETTE			1	1		
8	6K1–83614–01	.BRACKET .SUPPORT			1	1		
9	98980–05010	.SCREW, BIND .VIS, DE PRESSION			2	2		
10	92990–05100	.WASHER, SPRING .RONDELLE, GROWER			2	2		
11	95380–05600	.NUT .ECROU			2	2		
12	688–83383–11	.BUZZER .RONFLEUR			2	2		
13	6K1–85830–01	.CONTROL UNIT ASSY .BLOC DE CONTROLE			1	1		
14	98980–06020	.SCREW, BIND .VIS, DE PRESSION			2	2		
15	95380–06600	.NUT, HEXAGON .ECROU			2	2		
16	92990–06100	.WASHER, SPRING .RONDELLE, GROWER			2	2		
17	92990–06600	.WASHER, PLATE .RONDELLE, PLATE			2	2		
18	6K1–81980–00	.DIODE ASSY .REDRESSEUR 2			2	2		
19	90149–05M05	SCREW VIS			4	4		AP AP
20	95380–05600	NUT ECROU			4	4		AP AP
21	92990–05100	WASHER, SPRING RONDELLE, GROWER			4	4		AP AP
22	92990–05600	WASHER, PLATE RONDELLE, PLATE			4	4		AP AP
23	6K1–8258A–40	EXTENSION, WIRE HARNESS EXTENSION, FAISCEAU DE FILS			1	1		AP AP
24	61B–8258A–01	EXTENSION, WIRE HARNESS EXTENSION, FAISCEAU DE FILS			1	1		AP AP

FIG. 40 REPAIR KIT 1 — KITS DE REPARATION 1

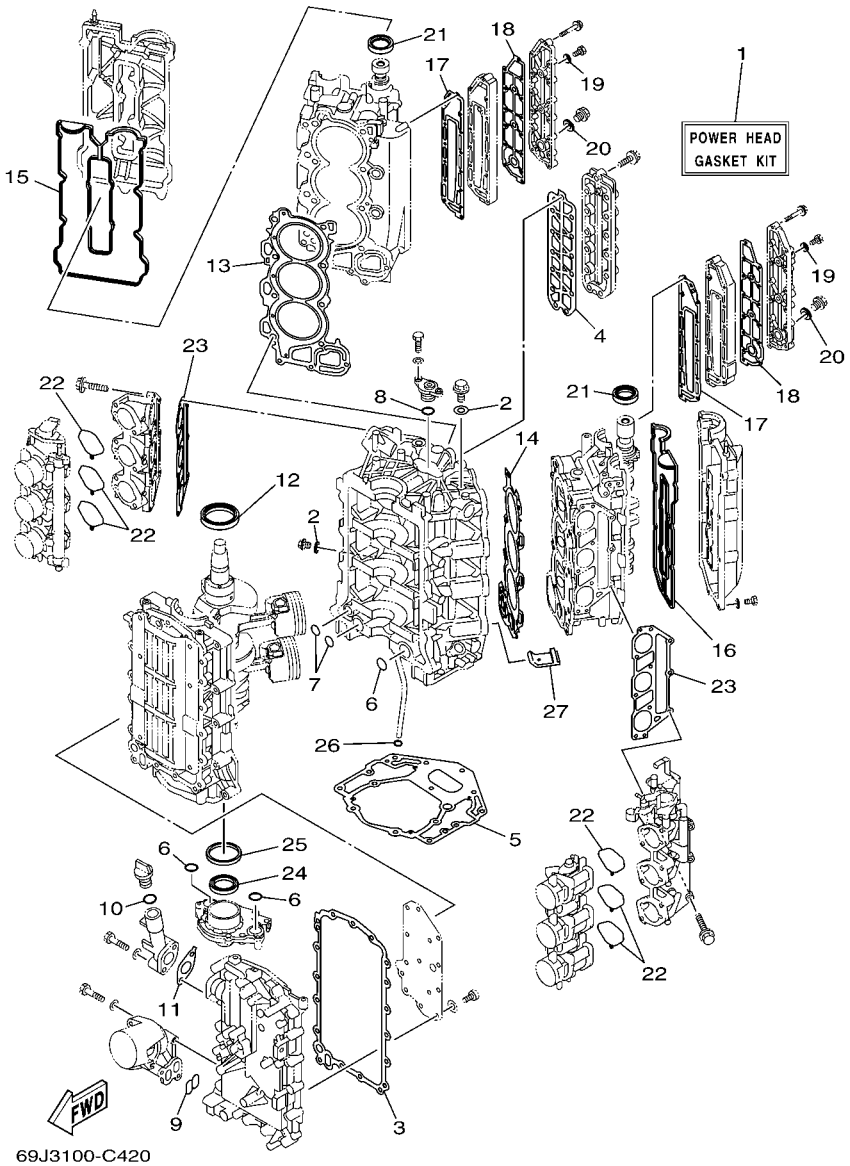

REF. NO.	PART NO. N° PIECES	DESCRIPTION DESCRIPTION	69J3	60L3	69K3	60M3		REMARKS REMARQUES
1	69J–W0001–02	POWER HEAD GASKET KIT POCHETTE DE JINTS TETE MOTRICE	1	1	1	1		
2	90430–14115	.GASKET .JOINT	2	2	2	2		
3	69J–15451–00	.GASKET, CRANKCASE COVER 1 .JOINT, COUVERCLE DE CARTER 1	1	1	1	1		
4	69J–1131B–00	.GASKET, COVER .JOINT, COUVERCLE	1	1	1	1		
5	69J–11351–10	.GASKET, CYLINDER .JOINT, D'EMBASE	1	1	1	1		
6	93210–25552	.O-RING .JOINT TORIQUE	3	3	3	3		
7	93210–19MJ1	.O-RING .JOINT TORIQUE	2	2	2	2		
8	93210–25647	.O-RING .JOINT TORIQUE	1	1	1	1		
9	69J–13477–00	.GASKET .JOINT	1	1	1	1		
10	93210–24M79	.O-RING .JOINT TORIQUE	1	1	1	1		
11	69J–15364–A0	.GASKET, OIL PLUG .JOINT, PLOT D'HUILE	1	1	1	1		
12	93102–63004	.OIL SEAL .JOINT SPY	1	1	1	1		
13	69J–11181–02	.GASKET, CYLINDER HEAD 1 .JOINT, DE CULASSE 1	1	1	1	1		
14	69J–11182–02	.GASKET, CYLINDER HEAD 2 .JOINT, CULASSE 2	1	1	1	1		
15	69J–11193–00	.GASKET, HEAD COVER 1 .JOINT, COUVERCLE DE CULASSE 1	1	1	1	1		
16	69J–11194–00	.GASKET, HEAD COVER 2 .JOINT, COUVERCLE DE CULASSE 2	1	1	1	1		
17	69J–41112–00	.GASKET, EXHAUST INNER COVER .JOINT, PLAQUE D'ECHAPPEMENT	2	2	2	2		
18	69J–41114–00	.GASKET, EXHAUST OUTER COVER .JOINT, COUVERCLE D'ECHAPPEMEN	2	2	2	2		
19	90430–08143	.GASKET .JOINT	4	4	4	4		
20	90430–18130	.GASKET .JOINT	2	2	2	2		
21	93102–38M59	.OIL SEAL .JOINT SPY	2	2	2	2		
22	69J–13557–00	.GASKET .JOINT	6	6	6	6		
23	69J–13645–00	.GASKET, MANIFOLD 1 .JOINT, TUBULURE 1	2	2	2	2		
24	69J–13338–00	.OIL SEAL .JOINT SPY	1	1	1	1		
25	69J–11355–00	.SEAL, CYLINDER 1 .JOINT, SPY CYLINDRE	1	1	1	1		
26	93210–19MJ3	.O-RING .JOINT TORIQUE	1	1	1	1		
27	69J–14664–00	.GROMMET, WATER SHUT .PASSE-FIL	2	2	2	2		

FIG. 41 REPAIR KIT 2 — KITS DE REPARATION 2

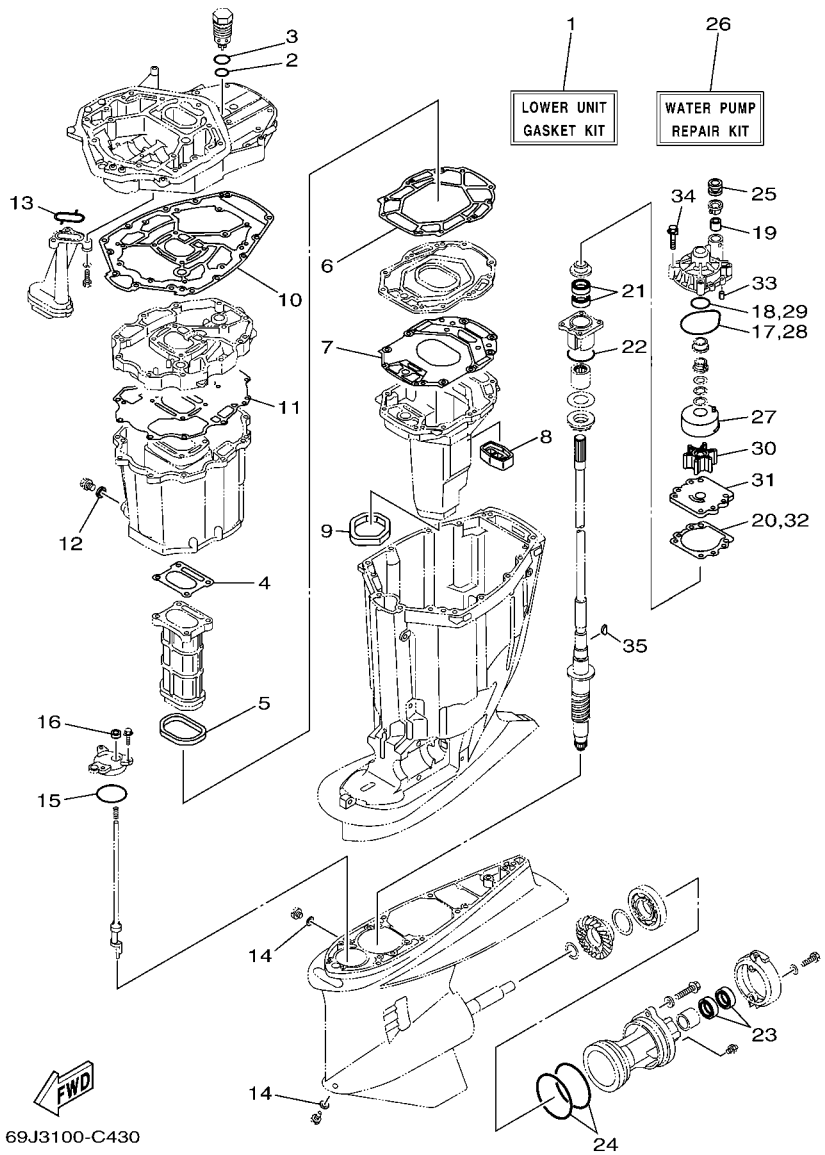

REF. NO.	PART NO. N° PIECES	DESCRIPTION DESCRIPTION	69J3	60L3	69K3	60M3		REMARKS REMARQUES
1	69J–W0001–21	LOWER UNIT GASKET KIT POCHETTE DE JOINTS EMBASE	1	1	1	1		
2	93210–28543	.O-RING .JOINT TORIQUE	1	1	1	1		
3	93210–33MG4	.O-RING .JOINT TORIQUE	1	1	1	1		
4	69J–41134–A0	.GASKET, EXHAUST MANIFOLD .JOINT, PIPE D'ECHAPPEMENT	1	1	1	1		
5	69J–41138–00	.SEAL, EXT. 1 .JOINT DE GROUPE 1	1	1	1	1		
6	69J–41135–A0	.GASKET, EXHAUST MANIFOLD .JOINT, PIPE D'ECHAPPEMENT	1	1	1	1		
7	69J–41136–A0	.GASKET, EXHAUST MANIFOLD 4 .JOINT, PIPE D'ECHAPPEMENT 4	1	1	1	1		
8	69J–45127–00	.SEAL .JOINT	1	1	1	1		
9	69J–45123–00	.GASKET, MUFFLER .JOINT, POT DE DETENTE	1	1	1	1		
10	69J–45113–10	.GASKET, UPPER CASING .JOINT, TUBE D'ARBRE	1	1	1	1		
11	69J–15312–01	.GASKET, OIL PAN .JOINT DE VENTILATEUR D'HUILE	1	1	1	1		
12	90430–14M09	.GASKET .JOINT	1	1	1	1		
13	69J–13415–00	.SEAL, OIL STRAINER .JOINT, FILTRE A HUILE	1	1	1	1		
14	90430–08020	.GASKET .JOINT	2	2	2	2		
15	93210–64488	.O-RING .JOINT TORIQUE	1	1	1	1		
16	93106–09014	.OIL SEAL .JOINT SPY	1	1	1	1		
17	93210–86M38	.O-RING .JOINT TORIQUE	1	1	1	1		
18	93210–37160	.O-RING .JOINT TORIQUE	1	1	1	1		
19	6E5–44365–00	.DAMPER, WATER SEAL .JOINT, TUBE D'EAU	1	1	1	1		
20	6E5–44315–A0	.GASKET, WATER PUMP .JOINT, POMPE A EAU	1	1	1	1		
21	93101–28M16	.OIL SEAL .JOINT SPY	2	2	2	2		
22	93210–55M14	.O-RING .JOINT TORIQUE	1	1	1	1		
23	93101–30M17	.OIL SEAL .JOINT SPY	2	2	2	2		
24	93211–04384	.O-RING .JOINT TORIQUE	2	2	2	2		
25	6E5–44366–00	.DAMPER, WATER SEAL .JOINT, TUBE D'EAU	1	1	1	1		
26	61A–W0078–A3	WATER PUMP REPAIR KIT KIT DE REPARATION DE LA POMPE	1	1	1	1		
27	61A–44322–02	.INSERT, CARTRIDGE .CUVETTE	1	1	1	1		

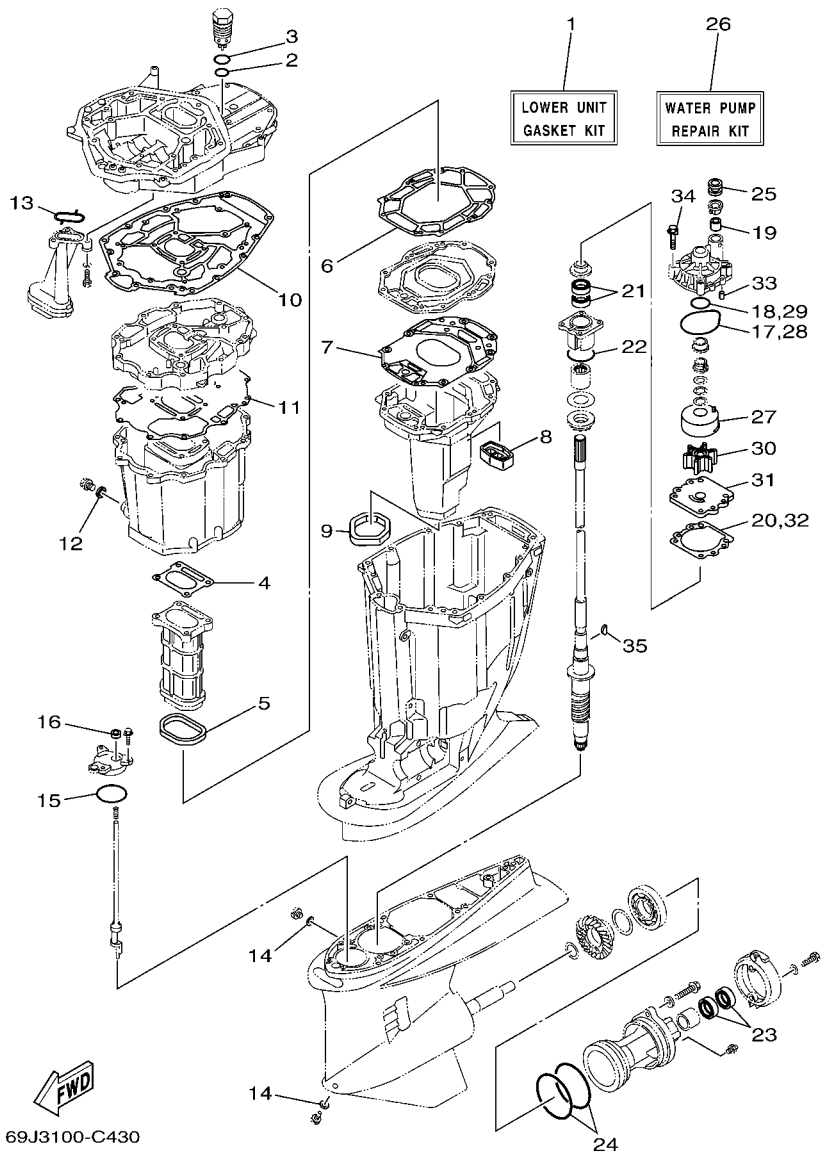

FIG. 41 REPAIR KIT 2 — KITS DE REPARATION 2

REF. NO.	PART NO. N° PIECES	DESCRIPTION DESCRIPTION	69J3	60L3	69K3	60M3		REMARKS REMARQUES
28	93210–86M38	.O-RING .JOINT TORIQUE	1	1	1	1		
29	93210–37160	.O-RING .JOINT TORIQUE	1	1	1	1		
30	6E5–44352–01	.IMPELLER .TURBINE	1	1	1	1		
31	6G5–44323–00	.OUTER PLATE, CARTRIDGE .PLAQUE EXTERIEURE	1	1	1	1		
32	6E5–44315–A0	.GASKET, WATER PUMP .JOINT, POMPE A EAU	1	1	1	1		
33	93606–12019	.PIN, DOWEL .GOUPILLE	2	2	2	2		
34	90119–08M14	.BOLT, WITH WASHER .BOULON, AVEC RONDELLE	4	4	4	4		
35	90280–04M05	.KEY, WOODRUFF .CLAVETTE, DEMI-LUNE	1	1	1	1		

NUMERICAL INDEX
INDEX NUMERIQUE

PART NO. N° PIECES	REF. NO.
69J–11110–01–94	4 – 2
69J–11119–00	2 – 20
69J–1111E–00	5 – 13
69J–11120–01–94	4 – 9
69J–11133–10	4 – 3
69J–11135–00	4 – 32
69J–11168–00	2 – 17
69J–11181–02	4 – 21
	40 – 13
69J–11182–02	4 – 26
	40 – 14
69J–11191–00–1S	4 – 31
69J–11192–00–1S	4 – 38
69J–11193–00	4 – 35
	40 – 15
69J–11194–00	4 – 39
	40 – 16
69J–11313–00–94	2 – 40
69J–1131B–00	2 – 23
	40 – 4
69J–1131C–00–1S	2 – 22
68V–11325–00	4 – 15
69J–11327–00–94	4 – 16
67F–11328–00	4 – 19
69J–11351–10	2 – 33
	40 – 5
69J–11355–00	31 – 19
	40 – 25
69J–11371–00	30 – 8
69J–11411–00	3 – 1
69J–11416–00	3 – 3
69J–11416–10	3 – 3
69J–11416–20	3 – 3
69J–11417–00	3 – 4
69J–11417–10	3 – 4
69J–11417–20	3 – 4
69J–11426–00	3 – 5
69J–11426–10	3 – 5
69J–11426–20	3 – 5
69J–11427–00	3 – 6
69J–11536–00	6 – 23
69J–11537–00	6 – 18
69J–11590–00	6 – 22
69J–11603–00	3 – 11
69J–11631–00–B0	3 – 10
69J–11633–00	3 – 12
69J–11634–00	3 – 13
69J–11654–00	3 – 8

PART NO. N° PIECES	REF. NO.
69J–11656–00	3 – 9
69J–11656–10	3 – 9
69J–11656–20	3 – 9
69J–12111–00	6 – 1
69J–12113–00	6 – 3
69J–12117–00	6 – 4
69J–12118–00	6 – 5
69J–12119–00	6 – 6
69J–12121–00	6 – 2
67F–12138–60	17 – 30
69J–12153–00	6 – 7
69J–12168–00	6 – 8
69J–12168–10	6 – 8
69J–12168–20	6 – 8
69J–12168–30	6 – 8
69J–12168–40	6 – 8
69J–12168–50	6 – 8
69J–12168–60	6 – 8
69J–12168–70	6 – 8
69J–12168–80	6 – 8
69J–12168–90	6 – 8
69J–12168–A0	6 – 8
69J–12168–B0	6 – 8
69J–12168–C0	6 – 8
69J–12168–D0	6 – 8
69J–12168–E0	6 – 8
69J–12168–F0	6 – 8
69J–12168–G0	6 – 8
69J–12168–H0	6 – 8
69J–12168–J0	6 – 8
69J–12168–K0	6 – 8
69J–12168–L0	6 – 8
69J–12168–M0	6 – 8
69J–12168–N0	6 – 8
69J–12168–P0	6 – 8
69J–12168–R0	6 – 8
69J–12168–S0	6 – 8
69J–12168–T0	6 – 8
69J–12168–U0	6 – 8
69J–12168–V0	6 – 8
69J–12168–W0	6 – 8
69J–12168–X0	6 – 8
69J–12168–Y0	6 – 8
69J–12169–00	6 – 8
69J–12171–00	6 – 9
69J–12172–00	6 – 11
69J–12181–00	6 – 10
69J–12182–00	6 – 12

PART NO. N° PIECES	REF. NO.
69J–12210–00	6 – 14
69J–12230–00	6 – 15
69J–12233–00	30 – 11
69J–1240H–00–1S	2 – 26
67F–12411–00	2 – 25
69J–1243A–00	2 – 30
69J–1243E–00	2 – 31
69J–12481–00	17 – 21
69J–12482–00	17 – 20
69J–12483–00	7 – 8
68T–12572–00	22 – 12
6R3–12581–00	22 – 13
6R3–12582–00	22 – 14
6R3–12583–00	22 – 15
69J–12858–00	2 – 46
69J–13119–00	31 – 17
68V–1312A–00	10 – 17
69J–13160–00	9 – 18
69J–13170–00	11 – 1
69J–13300–00	31 – 14
69J–13329–00	31 – 15
69J–13338–00	31 – 16
	40 – 24
69J–13411–00	31 – 9
69J–13415–00	31 – 11
	41 – 13
67F–13434–02	1 – 26
69J–13435–00	11 – 2
69J–13437–61	16 – 29
69J–13440–00	2 – 45
69J–13446–00–94	2 – 47
69J–13447–00	2 – 51
67F–13448–00	1 – 16
68V–13473–00	10 – 16
69J–13477–00	2 – 48
	40 – 9
60L–13490–00	12 – 40
69J–13532–00	11 – 20
69J–13533–00	11 – 21
69J–13542–00	11 – 19
68V–13544–00	11 – 17
69J–13545–00	11 – 15
69J–13546–00	11 – 14
69J–13547–00	10 – 33
69J–13557–00	9 – 27
	10 – 23
	40 – 22
69J–13573–00	10 – 31

PART NO. N° PIECES	REF. NO.
69J–13574–00	10 – 32
69J–13576–00	9 – 11
68V–13577–00	13 – 9
69J–13593–00	12 – 35
69J–13595–00	11 – 23
69J–13631–00	31 – 18
69J–13641–00	9 – 24
69J–13642–00	10 – 20
69J–13645–00	7 – 10
	40 – 23
69J–13716–00	12 – 36
60L–13750–00	9 – 1
69J–13750–00	9 – 1
60L–13751–00	9 – 2
69J–13751–00	9 – 2
60L–13752–00	10 – 2
69J–13752–00	10 – 2
60L–13753–00	9 – 5
69J–13753–00	9 – 5
60L–13754–00	10 – 7
69J–13754–00	10 – 7
60L–13755–00	9 – 8
69J–13755–00	9 – 8
60L–13756–00	10 – 10
69J–13756–00	10 – 10
60L–1375A–00	10 – 1
69J–1375A–00	10 – 1
60L–1375A–10	10 – 1
69J–1375A–10	10 – 1
69J–13761–00	9 – 31
	10 – 27
68V–13766–00	9 – 33
	10 – 29
68V–13769–00	12 – 12
68V–13781–00	12 – 16
68V–13781–10	12 – 16
68V–13784–00	12 – 19
69J–13906–00	11 – 6
69J–13907–01	12 – 17
68V–13915–00	12 – 18
69J–13972–00	9 – 39
69J–13973–00	9 – 37
69J–13974–00	11 – 16
	13 – 25
69J–13975–00	11 – 25
69J–13976–00	13 – 16
68V–1410B–00	9 – 32
	10 – 28

PART NO. N° PIECES	REF. NO.
69J–1410F–00	13 – 21
69J–14137–00	13 – 11
69J–14139–00	11 – 24
69J–14146–10	7 – 1
69J–14148–00	12 – 23
69J–14149–00	9 – 44
69J–14159–00	10 – 34
69J–14162–00	7 – 2
69J–14164–00	12 – 31
69J–14180–11	12 – 1
69J–14180–20	12 – 1
69J–14181–00	12 – 6
69J–14182–00	12 – 2
69J–14182–10	12 – 2
266–14191–00	12 – 7
69J–14197–00	12 – 24
68V–14225–00	11 – 5
69J–14225–00	12 – 37
69J–14251–00	9 – 21
68V–14255–00	12 – 13
69J–14255–00	10 – 35
69J–14261–00	9 – 16
68V–14264–00	9 – 34
	11 – 10
68V–14265–00	12 – 33
60L–14286–00	9 – 42
69J–14286–00	9 – 42
69J–14295–00	9 – 20
69J–14321–00	9 – 36
	10 – 30
68V–14323–00	9 – 14
	10 – 5
68V–14331–00	9 – 15
	10 – 6
69J–14348–00	7 – 30
5JW–14349–00	11 – 18
68V–14356–00	11 – 8
68V–14357–00	12 – 15
68V–14386–00	12 – 10
68V–14397–00	9 – 22
	11 – 3
69J–14409–00	7 – 6
69J–14419–00	7 – 18
68V–14428–00	9 – 35
	11 – 11
69J–1442A–00	7 – 5
69J–14440–00	7 – 14
69J–14446–00	12 – 34

PART NO. N° PIECES	REF. NO.
69J–1444F–00	7 – 16
69J–14457–00	7 – 20
5EL–14467–00	7 – 29
68V–14475–00	9 – 30
	10 – 26
	11 – 9
69J–14496–00	9 – 29
	10 – 25
69J–14546–00	12 – 11
68V–14565–00	9 – 13
	11 – 7
68V–14567–00	12 – 20
3CF–14594–00	9 – 3
	10 – 3
69J–14624–01	30 – 49
69J–14664–00	2 – 44
	40 – 27
69J–14711–10–5B	30 – 24
69J–14960–00	10 – 15
59V–14962–00	12 – 8
68V–14984–00	12 – 21
69J–14985–00	12 – 9
69J–14989–00	12 – 25
69J–15100–10–1S	2 – 2
69J–15123–00	2 – 7
69J–15187–00	2 – 8
69J–15311–00–5B	31 – 1
69J–15312–01	30 – 52
	41 – 11
69J–15316–00	30 – 35
69J–15319–00–1S	2 – 56
69J–15362–00	31 – 23
6G8–15363–00	2 – 54
69J–15364–A0	2 – 57
	40 – 11
69J–15373–00	7 – 25
69J–15377–00	31 – 24
69J–15393–00	7 – 27
69J–15394–00	7 – 26
69J–15397–00	7 – 28
69J–15411–00–94	2 – 13
69J–15451–00	2 – 14
	40 – 3
69J–15481–00	2 – 9
69J–15482–00	2 – 10
69J–15761–00	31 – 2
69J–2134V–00	5 – 17
69J–2134X–00	8 – 5

NUMERICAL INDEX
INDEX NUMERIQUE

PART NO. N° PIECES	REF. NO.
69J–21841–00	12 – 32
69J–2411R–00	12 – 3
69J–2411T–00	12 – 4
69J–24170–00	8 – 4
69J–2419A–00	8 – 9
68F–24300–00	9 – 38
	11 – 12
6YK–24307–42	15 – 1
60L–24311–00	8 – 19
61A–24311–00	14 – 5
60L–24312–00	8 – 17
60L–24313–00	8 – 14
69J–24313–00	14 – 22
60L–24314–00	8 – 13
60L–24315–00	8 – 1
69J–24315–00	13 – 15
60L–24316–00	12 – 41
69J–24316–00	13 – 7
60L–24317–00	11 – 15
69J–24317–00	13 – 6
60L–24321–00	12 – 38
69J–24321–00	13 – 3
69J–24322–00	13 – 4
69J–24322–10	13 – 4
69J–24323–00	13 – 5
69J–24324–00	13 – 2
69J–24324–10	13 – 3
69J–24325–00	13 – 20
60L–24327–00	12 – 42
60L–24366–00	8 – 22
69J–24366–00	13 – 22
60L–24367–00	8 – 21
69J–24367–00	13 – 23
68V–24377–00	11 – 22
6R3–24377–00	14 – 3
69J–24378–00	1 – 22
6E5–24378–00	13 – 13
60L–24379–00	12 – 39
69J–24379–00	12 – 22
6E5–24379–00	8 – 12
	22 – 10
69J–24381–00	9 – 40
	13 – 26
68V–24387–00	9 – 41
	11 – 13
	13 – 17
69J–24410–00	12 – 26
69J–24422–10	12 – 30

PART NO. N° PIECES	REF. NO.
4SV–24453–00	12 – 5
69J–24460–00	13 – 1
69J–24461–00	13 – 14
61A–24469–00	14 – 12
69J–24491–00	12 – 27
69J–24492–00	12 – 28
69J–24501–00	13 – 18
69J–24502–00	8 – 16
68V–24519–00	7 – 3
	11 – 26
	13 – 10
61A–24521–00	14 – 7
65L–24531–01	14 – 8
69J–24537–00	13 – 8
65L–24558–00	14 – 19
65L–24560–00	14 – 6
65L–24563–00	14 – 11
61A–24564–00	14 – 9
65L–24564–00	14 – 13
69J–24566–00	14 – 20
65L–24577–00	14 – 10
69J–24592–00	12 – 29
69J–24599–00	13 – 19
69J–24599–10	13 – 19
68V–2481H–00	13 – 12
69J–28100–01	14 – 25
67F–2812A–00	16 – 27
6A1–28176–00	21 – 52
69J–28199–73–A0	14 – 26
69J–28199–73–B0	14 – 26
69J–28199–83–A0	14 – 27
69J–28199–83–B0	14 – 27
61H–2819R–31	14 – 24
69J–41111–00–1S	5 – 1
69J–41112–00	5 – 5
	40 – 17
69J–41113–00–1S	5 – 3
69J–41114–00	5 – 6
	40 – 18
69J–41121–00–1S	5 – 2
69J–41123–00–1S	5 – 4
69J–41131–10–94	30 – 15
69J–41132–10–5B	30 – 17
69J–41134–A0	30 – 18
	41 – 4
69J–41135–A0	30 – 21
	41 – 6
69J–41136–A0	30 – 23

PART NO. N° PIECES	REF. NO.
69J–41136–A0	41 – 7
69J–41137–02–94	30 – 1
69J–41138–00	30 – 20
	41 – 5
69J–41210–00	25 – 4
69J–41211–00	25 – 9
69J–41213–00	24 – 23
682–41237–00	25 – 2
69J–41241–00	25 – 1
69J–41632–00–94	24 – 9
69J–41635–00	25 – 5
69J–41636–00	25 – 10
69J–41661–00–94	24 – 14
676–41662–00	24 – 20
69J–42152–00–94	24 – 5
69J–42153–00	24 – 8
69J–42154–00	24 – 1
68V–42171–00	24 – 2
69J–42510–00–8D	27 – 6
624–42542–00	16 – 25
	18 – 12
60L–42610–00–8D	1 – 1
69J–42610–00–8D	1 – 1
69J–42613–00	1 – 2
69J–42615–00	21 – 9
69J–42617–00	1 – 25
69J–42629–00	1 – 3
69J–42647–00–94	1 – 6
68F–42647–01–94	1 – 5
68F–42648–01–94	1 – 14
68F–42651–00	1 – 10
67F–42652–00	1 – 15
68F–42663–00	1 – 13
69J–42663–00	1 – 7
60L–42677–00	1 – 19
69J–42677–00	1 – 19
60L–42678–00	1 – 17
69J–42678–00	1 – 17
69J–42681–00	1 – 20
69J–42682–00	1 – 21
69J–42710–01–8D	21 – 1
648–42715–00	23 – 27
69J–42716–00	21 – 10
61A–42717–00	21 – 19
69J–42717–00	21 – 18
69J–42723–00–8D	19 – 10
6E5–42724–00	30 – 7
69J–42725–01	21 – 6

PART NO. N° PIECES	REF. NO.
6H1–42726–21	21 – 14
61A–42727–00	21 – 16
69J–42738–01–5B	21 – 2
64D–42738–10–5B	21 – 7
69J–42741–00–8D	22 – 1
69J–42744–10	21 – 3
68F–42753–00	21 – 48
67F–42761–00–94	2 – 34
69J–42769–00	30 – 31
69J–42771–00–8D	22 – 3
69J–42774–00	22 – 7
69J–42815–00–8D	21 – 30
69J–42816–00–8D	21 – 39
69J–42817–00–8D	21 – 31
67F–42818–00	21 – 42
68F–42818–00	21 – 34
68F–42828–00–5B	21 – 27
69J–42828–00–5B	21 – 28
68F–42828–10–5B	21 – 37
69J–42828–10–94	21 – 37
69J–43111–01–8D	26 – 1
69J–43112–01–8D	26 – 14
6E5–43126–02	26 – 44
6R3–43131–00	26 – 21
61A–43132–00	26 – 12
61A–43133–00	26 – 15
64D–43144–00	21 – 45
6G5–43144–00	26 – 35
6E5–43145–01	36 – 8
6G5–43148–10	26 – 40
61A–43181–01	26 – 37
6G5–43185–02	26 – 38
61A–43311–21–8D	26 – 32
61A–43376–00	27 – 4
69J–43800–01–4D	28 – 1
69J–43801–00	28 – 4
69J–43804–00	29 – 5
69J–43805–00	29 – 4
69J–4380P–01	28 – 12
69J–43810–01	28 – 3
61A–43811–00	28 – 9
61A–43813–01	28 – 18
6H1–43814–00	28 – 17
69J–43816–00	28 – 63
69J–43817–00	29 – 13
61A–43818–00	28 – 25
69J–4381C–00	28 – 30
69J–4381J–00	28 – 64

PART NO. N° PIECES	REF. NO.
69J–43820–00	28 – 71
61A–43821–00	28 – 70
61A–43822–00	28 – 69
69J–43828–00	29 – 16
6H1–43829–00	29 – 19
69J–4382E–00	28 – 11
69J–43830–01	28 – 33
69J–43831–00	28 – 66
69J–43833–00	28 – 21
61A–43835–01	28 – 19
69J–43840–01	28 – 2
69J–43841–00	28 – 42
69J–43843–00	28 – 53
69J–43844–00	28 – 50
6H1–43844–10	28 – 55
69J–43845–00	28 – 28
69A–4384F–00	28 – 39
69J–4384G–00	28 – 58
6H1–4384G–11	28 – 54
69J–4384H–00	28 – 10
61A–4384H–10	28 – 74
69J–4384M–00	28 – 38
69J–43851–00	28 – 49
69J–43853–00	28 – 45
69J–43854–00	28 – 57
69J–43855–00	28 – 52
6H1–43856–10	28 – 56
61A–43861–00	28 – 14
69J–43861–00	29 – 6
6H1–43861–00	28 – 6
61A–43864–00	28 – 73
6H1–43869–00	29 – 15
60V–4386A–00	28 – 44
69J–4386K–00	29 – 10
61A–43871–00	28 – 15
69J–43871–00	28 – 62
6H1–43872–00	28 – 7
61A–43874–00	28 – 72
6H1–43875–00	28 – 29
6T4–43875–01	28 – 68
61A–43875–10	28 – 75
61A–43876–00	28 – 26
CS3–4387G–00	28 – 59
69J–43880–00	29 – 1
69J–43881–00	29 – 11
69J–43882–00	29 – 8
6H1–43883–00	28 – 43
69J–43886–00	29 – 7

PART NO. N° PIECES	REF. NO.
69J–43888–00	29 – 17
69J–4388E–00	28 – 23
69J–4388F–00	29 – 14
69J–4388H–00	29 – 12
69J–4388J–00	28 – 20
69J–43891–00	29 – 9
69J–43893–00	28 – 46
69J–43894–00	28 – 41
69J–43899–00	28 – 31
61A–4389H–00	28 – 8
69J–4389J–00	28 – 32
69J–44117–00–1S	23 – 5
69J–44118–00	23 – 26
69J–44120–00	23 – 33
69J–44120–10	23 – 33
69J–44121–00	23 – 21
69J–44122–00	23 – 22
69J–44135–00	24 – 24
69J–44150–00	32 – 15
69K–44150–00	34 – 17
69J–44176–01–1S	23 – 8
61A–44311–01	32 – 18
	34 – 20
6E5–44312–00	32 – 23
	34 – 25
6E5–44315–A0	32 – 31
	34 – 33
	41 – 20
61A–44322–02	32 – 19
	34 – 21
	41 – 27
6G5–44323–00	32 – 30
	34 – 32
	41 – 31
6E5–44352–01	32 – 24
	34 – 26
	41 – 30
69J–44361–00	33 – 3
	35 – 3
69J–44361–10	33 – 3
6E5–44365–00	32 – 22
	33 – 1
	34 – 24
	35 – 1
	41 – 19
663–44366–00	32 – 6
	34 – 8
6E5–44366–00	30 – 54

NUMERICAL INDEX
INDEX NUMERIQUE

PART NO. N° PIECES	REF. NO.
6E5–44366–00	33 – 2
	35 – 2
	41 – 25
69J–44391–00	21 – 17
61A–44511–00–94	27 – 33
69J–44514–00–94	27 – 25
6G5–44526–00	26 – 3
69J–44532–00	27 – 28
68F–44533–00	2 – 35
69J–44533–00	27 – 32
69J–44551–00–8D	27 – 11
61A–44552–01–94	27 – 22
66K–44555–00–94	27 – 14
61A–44575–00	27 – 13
69J–45111–02–8D	30 – 30
69J–45113–10	30 – 32
	41 – 10
69J–45123–00	30 – 29
	41 – 9
69J–45127–00	30 – 28
	41 – 8
69J–45151–00–8D	22 – 8
69J–45152–00–8D	30 – 36
61A–45155–00	30 – 40
69J–45159–00	30 – 56
69J–45181–00–5B	30 – 22
69J–45211–01–8D	30 – 53
61A–45214–10	33 – 10
	35 – 10
61A–45215–10	33 – 11
	35 – 11
6G5–45251–02	26 – 2
69J–45300–21–8D	32 – 1
69K–45300–21–8D	34 – 1
69J–45300–31–8D	32 – 1
61A–45301–10–8D	32 – 2
	34 – 2
69J–45318–01	30 – 38
61A–45321–01	32 – 11
	34 – 13
61A–45331–00–94	32 – 34
	34 – 36
69J–45332–00–94	32 – 60
69K–45332–00–94	34 – 63
688–45341–10	32 – 8
	34 – 10
6E5–45344–00	32 – 40
	34 – 42

PART NO. N° PIECES	REF. NO.
69J–45361–00–8D	32 – 71
	34 – 77
61A–45371–00	33 – 14
	35 – 14
69J–45375–00	33 – 9
	35 – 9
61A–45376–00–94	32 – 10
	34 – 12
61A–45378–00	30 – 46
61B–45383–00	34 – 68
69K–45384–00	34 – 69
69J–45501–00	32 – 43
	34 – 45
61A–45501–30	32 – 43
61A–45527–00	32 – 27
	34 – 29
61A–45538–00	32 – 26
	34 – 28
61B–45538–01	34 – 4
69J–45551–00	32 – 44
	34 – 46
69J–45560–00	32 – 47
69K–45560–00	34 – 49
61A–45567–00–10	32 – 5
	34 – 7
61A–45567–00–12	32 – 5
	34 – 7
61A–45567–00–15	32 – 5
	34 – 7
61A–45567–00–18	32 – 5
	34 – 7
61A–45567–00–30	32 – 5
	34 – 7
61A–45567–00–40	32 – 5
	34 – 7
61A–45567–00–50	32 – 5
	34 – 7
69J–45571–00	32 – 62
69K–45571–00	34 – 65
69K–45577–00	34 – 70
61A–45577–00–10	32 – 64
61A–45577–00–12	32 – 64
61A–45577–00–15	32 – 64
61A–45577–00–18	32 – 64
61A–45577–00–30	32 – 64
61A–45577–00–40	32 – 64
61A–45577–00–50	32 – 64
69K–45577–10	34 – 70

PART NO. N° PIECES	REF. NO.
69K–45577–20	34 – 70
69K–45577–30	34 – 70
69K–45577–40	34 – 70
69K–45577–50	34 – 70
69K–45577–60	34 – 70
6K1–45578–01–10	34 – 67
6K1–45578–01–12	34 – 67
6K1–45578–01–15	34 – 67
6K1–45578–01–18	34 – 67
6K1–45578–01–30	34 – 67
6K1–45578–01–40	34 – 67
6K1–45578–01–50	34 – 67
61A–45587–00–10	32 – 37
	34 – 39
61A–45587–00–12	32 – 37
	34 – 39
61A–45587–00–15	32 – 37
	34 – 39
61A–45587–00–18	32 – 37
	34 – 39
61A–45587–00–30	32 – 37
	34 – 39
61A–45587–00–40	32 – 37
	34 – 39
61A–45587–00–50	32 – 37
	34 – 39
69J–45611–00	32 – 48
69K–45611–00	34 – 51
69J–45631–00	32 – 52
	34 – 55
61A–45632–00	32 – 51
	34 – 54
61A–45633–00	32 – 53
	34 – 56
61A–45634–01	32 – 50
	34 – 53
61A–45635–00	32 – 55
	34 – 58
61B–45641–01	34 – 52
61A–45641–02	32 – 49
6H1–45668–00	32 – 54
	34 – 57
6K1–45970–01–98	35 – 21
6G5–45970–02–98	33 – 21
6R1–45970–A0	35 – 21
6R4–45970–A0	33 – 21
61A–45972–00–98	33 – 21
61B–45972–00–98	35 – 21

PART NO. N° PIECES	REF. NO.
6K1–45972–01–98	35 – 21
6G5–45972–02–98	33 – 21
6R1–45972–A0	35 – 21
6R4–45972–A0	33 – 21
61A–45974–00–98	33 – 21
61B–45974–00–98	35 – 21
6K1–45974–02–98	35 – 21
6G5–45974–03–98	33 – 21
6R1–45974–A0	35 – 21
6R4–45974–A0	33 – 21
66K–45974–B0	33 – 21
6R1–45976–A0	35 – 21
6R4–45976–A0	33 – 21
61A–45978–00–98	33 – 21
61B–45978–00–98	35 – 21
6K1–45978–02–98	35 – 21
6G5–45978–03–98	33 – 21
6R1–45978–A0	35 – 21
6R4–45978–A0	33 – 21
69J–45987–00	33 – 16
	35 – 16
688–45997–01	33 – 17
	35 – 17
69J–46241–00	6 – 21
703–48205–17	37 – 1
704–48207–23	37 – 2
701–48320–40	37 – 3
701–48320–50	37 – 3
701–48320–60	37 – 3
701–48320–80	37 – 3
6E5–48344–00	23 – 3
	24 – 12
701–48350–00	37 – 3
69J–48531–00	23 – 1
6E5–61301–01	36 – 10
6E5–61303–00	36 – 14
6E5–61311–11	36 – 12
6E5–61313–00	36 – 11
6E5–61315–00	36 – 13
6E5–61350–02	36 – 1
6E5–61351–01	36 – 2
6E5–61355–00	36 – 5
68V–81145–01	9 – 12
68V–81146–01	10 – 18
68V–81147–00	9 – 23
	10 – 14
	11 – 4
69J–81315–00	19 – 21

PART NO. N° PIECES	REF. NO.
69J–8132G–00	16 – 17
67F–81332–00	16 – 14
69J–81337–00	16 – 22
63D–81345–20	16 – 5
69J–81410–01	16 – 4
69J–81450–10	16 – 1
69J–81460–01	16 – 2
69J–81673–00	16 – 13
69J–81800–00	20 – 1
69J–81801–00	20 – 5
67F–81807–00	20 – 10
67F–81808–00	20 – 8
67F–81809–00	20 – 19
67F–81810–00	20 – 3
67F–81813–00	20 – 6
68F–81820–00	20 – 7
67F–81821–00	20 – 13
6K7–81826–10	20 – 24
69J–81828–00	20 – 25
68V–8182L–00	9 – 43
67F–81830–00	20 – 17
67F–81832–00	20 – 11
67F–81836–00	20 – 12
69J–81839–00	20 – 21
67F–8183R–00	20 – 16
67F–8183T–00	20 – 18
69J–81840–00	20 – 4
67F–81841–00	20 – 14
69J–81842–00	20 – 20
67F–81846–00	20 – 26
67F–81850–00	20 – 2
67F–81857–00	20 – 9
69J–81869–00	20 – 23
67F–81891–00	20 – 15
69J–81919–00	18 – 32
69J–81919–20	16 – 28
69J–81925–00	18 – 4
69J–81941–00	20 – 22
69J–81942–00	18 – 27
69J–81948–00	18 – 10
69J–81949–00	19 – 23
68V–8194A–00	18 – 14
68V–81950–00	18 – 30
69J–81950–11	18 – 21
68V–81953–00	18 – 18
69J–81960–11	17 – 12
69J–81972–01–1S	17 – 14
69J–81975–A0	17 – 13

PART NO. N° PIECES	REF. NO.
6K1–81980–00	39 – 18
69J–82105–00	18 – 9
6Y5–82117–00	38 – 17
6G5–82119–00	18 – 20
703–82119–00	27 – 2
69J–82147–00	26 – 34
6E5–82148–00	26 – 9
6H1–82148–00	26 – 6
6E5–82149–00	27 – 17
1E6–82151–00	38 – 16
67F–82151–00	19 – 17
67F–82151–10	19 – 18
67F–82151–20	19 – 2
69J–8215B–00	19 – 3
67F–8215B–10	19 – 15
67F–8215B–20	19 – 16
69J–82310–00	17 – 4
69J–82314–00	17 – 9
69J–82316–00	17 – 1
6A0–82317–00	16 – 24
	18 – 11
663–82317–01	16 – 23
	17 – 11
67F–82377–00	21 – 51
68V–82380–00	10 – 19
6K1–82510–06	39 – 3
69J–82519–00	17 – 24
703–82531–00	38 – 27
6K1–82532–00	39 – 5
68F–82553–80	38 – 18
68F–82553–90	38 – 18
69J–82554–00	21 – 24
682–82556–00	39 – 7
69J–82560–00	2 – 60
69J–82563–00	19 – 9
6K1–82570–07	39 – 1
6K1–82571–01	39 – 2
6K1–82575–00	39 – 6
703–82577–00	39 – 4
6E3–8257H–00	21 – 53
69J–82587–00	19 – 11
6E5–82588–00	21 – 20
6E9–82588–00	2 – 62
61A–82588–01	23 – 15
61B–8258A–01	39 – 24
6K1–8258A–40	39 – 23
69J–82590–20	19 – 1
68V–82594–00	21 – 50

NUMERICAL INDEX
INDEX NUMERIQUE

PART NO. N° PIECES	REF. NO.
68F–8259F–00	23 – 13
69J–8259F–00	23 – 14
69J–8259L–00	11 – 27
69J–8259N–10	19 – 14
69J–83306–01	19 – 19
688–83383–11	39 – 12
6Y5–83500–S5	38 – 6
6Y5–8350F–00	38 – 21
6Y5–8350T–03	38 – 1
6Y5–83533–T2	38 – 10
6Y5–83553–00	38 – 15
6Y5–83553–F1	38 – 23
6Y5–83553–M0	38 – 15
6Y5–83557–10	38 – 19
6Y5–83557–31	38 – 11
6E5–83558–00	30 – 43
6Y5–83570–S5	38 – 7
69J–83614–00	19 – 12
6K1–83614–01	39 – 8
6K1–83623–41	16 – 32
6K1–83623–50	16 – 33
6A1–83625–41	16 – 30
6A1–83625–51	16 – 31
69J–83626–00	17 – 29
69J–83651–00	2 – 63
69J–83672–00	27 – 1
6Y5–83728–00	38 – 12
663–85518–00	24 – 10
689–85547–00	14 – 1
69J–85580–00	16 – 3
6Y5–85752–01	38 – 24
61A–85790–00	17 – 27
6K1–85830–01	39 – 13
69J–85885–00	9 – 17
65L–85886–00	7 – 31
60L–8591A–02	18 – 1
69J–8591A–03	18 – 1
6Y5–87122–S0	38 – 14
69J–W0001–02	40 – 1
69J–W0001–21	41 – 1
69J–W0070–00	1 – 18
61A–W0078–A3	41 – 26
69J–W009A–02–1S	4 – 1
69J–W009A–03–1S	4 – 1
69J–W009B–02–1S	2 – 1
69J–W009C–02–1S	4 – 8
69J–W1165–00	3 – 7
90101–09M70	36 – 18

PART NO. N° PIECES	REF. NO.
90101–12M05	26 – 48
90105–08036	32 – 68
	34 – 74
90105–10M00	33 – 15
	35 – 15
90109–06040	24 – 25
90109–06M81	21 – 21
90109–06M82	19 – 20
	21 – 5
90109–06M86	2 – 27
	19 – 13
	21 – 23
	23 – 2
90109–08019	23 – 11
90109–14M10	27 – 29
90109–14M48	27 – 18
90110–05010	6 – 24
90110–06038	17 – 10
90111–06025	22 – 4
90111–06026	22 – 5
90116–06032	7 – 4
90116–10012	30 – 57
90119–06027	5 – 7
90119–06036	7 – 22
90119–06037	14 – 21
90119–06041	17 – 3
90119–06055	5 – 8
90119–06M10	32 – 14
	34 – 16
90119–06M17	30 – 48
90119–06M24	7 – 13
90119–06M59	8 – 8
	16 – 26
	18 – 13
90119–06MA2	2 – 21
	5 – 14
90119–06MA3	17 – 15
90119–06MA4	2 – 24
90119–06MA5	17 – 16
90119–07234	4 – 7
90119–07235	4 – 6
90119–08009	2 – 16
90119–08021	4 – 25
90119–08022	7 – 11
90119–08M14	32 – 33
	34 – 35
	41 – 34
90119–08M22	21 – 11

PART NO. N° PIECES	REF. NO.
90119–08M66	2 – 12
90119–08M79	30 – 2
90119–08M91	4 – 24
90119–10007	30 – 33
90119–10008	30 – 61
90119–10009	33 – 8
90119–10M06	6 – 19
90119–10MA2	33 – 8
	35 – 8
90149–05M05	39 – 19
90152–05003	33 – 12
	35 – 12
90155–10001	4 – 23
90158–06002	38 – 25
90169–05M00	18 – 28
90170–09M05	36 – 19
90170–14M06	36 – 15
90170–16M19	32 – 46
	34 – 48
90171–18M04	33 – 19
	35 – 19
90173–06001	22 – 2
90179–06M28	1 – 4
	7 – 24
90179–24002	16 – 12
90183–02M03	32 – 57
	34 – 60
90185–05002	33 – 13
	35 – 13
90185–09M01	36 – 6
90185–14M00	27 – 20
90185–22M11	26 – 24
90201–02M00	32 – 56
	34 – 59
90201–06068	14 – 18
	21 – 36
90201–06M31	25 – 8
90201–08023	32 – 69
	34 – 75
90201–09M02	23 – 36
90201–10M02	24 – 11
90201–10M20	36 – 7
90201–10M76	36 – 17
90201–12M05	26 – 50
90201–13M01	26 – 49
90201–15M58	27 – 19
90201–16M00	32 – 45
	34 – 47

PART NO. N° PIECES	REF. NO.
90201–16M01	27 – 26
90201–16M55	27 – 16
90201–22M01	32 – 28
	34 – 30
90201–24014	16 – 11
90201–26M59	26 – 23
90201–31M00	32 – 63
90201–40M00	27 – 7
90202–08M20	23 – 23
90202–28M46	27 – 27
90202–32M19	27 – 15
90202–40M47	27 – 10
90206–10M04	24 – 26
90206–14N50	29 – 2
90206–15M18	21 – 33
90206–22M19	32 – 29
	34 – 31
90280–04008	6 – 25
90280–04M05	32 – 25
	34 – 27
	41 – 35
90280–05015	16 – 10
90340–08002	32 – 7
	34 – 9
90340–14M06	2 – 5
	5 – 15
	31 – 7
90340–18M09	5 – 11
90344–51019	4 – 4
90386–06M12	23 – 25
90386–08001	7 – 21
90386–10025	24 – 3
90386–10M16	26 – 39
90386–12069	23 – 10
90386–15M73	21 – 32
90386–18M14	26 – 46
	28 – 24
90386–18M63	26 – 45
90386–25M31	26 – 22
90386–39M89	27 – 8
90386–90M90	23 – 35
90387–06037	30 – 12
90387–06038	7 – 23
90387–06M60	8 – 7
90387–06M64	31 – 10
90387–07005	7 – 15
90387–08M37	21 – 13
90387–10M02	26 – 41

PART NO. N° PIECES	REF. NO.
90387–10M08	4 – 22
90387–10M61	36 – 3
90430–06014	9 – 26
	10 – 22
90430–08020	32 – 9
	34 – 11
	41 – 14
90430–08143	5 – 10
	40 – 19
90430–14115	2 – 6
	5 – 16
	40 – 2
90430–14M09	31 – 8
	41 – 12
90430–18130	5 – 12
	40 – 20
90445–07010	30 – 45
90445–07012	30 – 45
90445–11012	22 – 11
90445–11020	1 – 23
90445–11021	1 – 24
90445–11028	22 – 16
90445–13004	14 – 2
90448–10002	8 – 20
90448–10005	8 – 2
90448–12001	8 – 18
90448–12002	8 – 15
90462–20001	21 – 22
90464–07M56	17 – 8
	18 – 29
90464–09010	23 – 20
90464–09M47	21 – 26
90464–12002	17 – 7
90464–12004	8 – 3
90464–20258	21 – 49
90465–06M67	24 – 17
90465–06M86	23 – 19
90465–08M83	26 – 18
90465–11M10	2 – 32
	8 – 23
	14 – 4
	21 – 15
	22 – 17
	23 – 18
	26 – 25
	30 – 44
	38 – 13
90465–11M52	7 – 19

PART NO. N° PIECES	REF. NO.
90465–13M18	16 – 20
	19 – 22
90465–14M66	16 – 21
90467–08M18	17 – 23
90467–09M03	7 – 9
	17 – 22
90468–18008	23 – 4
	24 – 13
90480–09M21	17 – 2
90480–10M23	8 – 6
90480–14M17	22 – 6
90480–22M81	21 – 12
90501–10M77	32 – 58
	34 – 61
90501–11M10	32 – 17
	34 – 19
90501–12082	23 – 29
90506–16M34	21 – 47
90506–20011	26 – 43
90508–20020	23 – 12
90560–12M01	36 – 4
91318–05025	28 – 60
91318–05040	28 – 65
91490–20015	23 – 37
91490–40030	33 – 20
	35 – 20
91690–30008	25 – 6
91690–30010	23 – 32
91690–30018	24 – 7
91690–30020	26 – 42
91690–30025	24 – 6
91690–50014	7 – 12
91809–08006	4 – 5
91814–18001	2 – 4
92903–06600	18 – 26
92903–08100	20 – 30
92903–08600	20 – 28
92907–04600	2 – 19
	4 – 34
92907–06600	31 – 13
92990–04100	38 – 4
92990–05100	39 – 10
92990–05600	39 – 22
92990–06100	1 – 8
	39 – 16
92990–06600	30 – 51
	39 – 17
92990–08100	9 – 4

NUMERICAL INDEX
INDEX NUMERIQUE

PART NO. N° PIECES	REF. NO.
92990–08100	10 – 4
92990–10100	30 – 59
92990–10600	17 – 28
	30 – 58
92990–18200	33 – 18
	35 – 18
92995–04100	23 – 17
92995–06100	14 – 17
	16 – 8
	17 – 18
	18 – 16
	19 – 5
92995–06600	1 – 12
	2 – 29
	4 – 18
	8 – 11
	14 – 15
	16 – 9
	17 – 6
	18 – 3
	19 – 6
	23 – 7
	24 – 16
	26 – 5
	30 – 14
	31 – 21
92995–08600	18 – 6
	30 – 26
	31 – 5
	32 – 42
	34 – 44
92995–10100	26 – 30
	33 – 6
	35 – 6
92995–10600	26 – 31
	27 – 24
	30 – 4
	33 – 7
	35 – 7
92995–14600	27 – 21
93101–28M16	32 – 35
	34 – 37
	41 – 21
93101–30M17	32 – 66
	34 – 72
	41 – 23
93102–38M59	6 – 20
	40 – 21

PART NO. N° PIECES	REF. NO.
93102–63004	3 – 2
	40 – 12
93106–09014	32 – 13
	34 – 15
	41 – 16
93106–19N50	28 – 5
93210–064A5	28 – 51
93210–08391	28 – 48
93210–09165	23 – 34
	29 – 18
93210–16275	36 – 9
93210–17239	28 – 22
93210–18397	28 – 27
93210–19MJ1	2 – 39
	40 – 7
93210–19MJ3	31 – 25
	40 – 26
93210–24M79	2 – 55
	40 – 10
93210–25552	2 – 38
	31 – 22
	40 – 6
93210–25647	2 – 41
	40 – 8
93210–28543	30 – 9
	41 – 2
93210–33MG4	30 – 10
	41 – 3
93210–35321	27 – 9
93210–37160	32 – 21
	34 – 23
	41 – 18
93210–55M14	32 – 39
	34 – 41
	41 – 22
93210–64488	32 – 12
	34 – 14
	41 – 15
93210–86M38	32 – 20
	34 – 22
	41 – 17
93211–04384	32 – 67
	34 – 73
	41 – 24
93306–210U0	32 – 61
93311–832V2	32 – 3
	34 – 3
93315–43061	32 – 65

PART NO. N° PIECES	REF. NO.
93315–43061	34 – 71
93315–660W3	34 – 5
93317–330U2	32 – 36
	34 – 38
93317–428U7	34 – 50
93332–00048	34 – 64
93332–000W1	32 – 4
93341–440U5	34 – 66
93341–670V0	34 – 6
93341–930U9	32 – 38
	34 – 40
93399–999T6	29 – 3
93410–10082	24 – 4
93410–18M02	26 – 47
93410–37M04	27 – 12
93420–36M01	30 – 39
93501–04011	32 – 59
	34 – 62
93501–04M02	23 – 28
93501–08001	28 – 47
93503–16003	28 – 37
93505–32038	28 – 13
93604–35236	28 – 61
93605–10108	6 – 17
93606–12019	2 – 3
	30 – 47
	32 – 32
	34 – 34
	41 – 33
93606–19M23	30 – 27
93608–12M05	30 – 55
	33 – 4
	35 – 4
93608–16M16	30 – 6
	31 – 6
93700–06M01	23 – 9
93700–06M03	26 – 17
93700–09M00	32 – 70
	34 – 76
94581–99044	6 – 13
94702–00391	4 – 42
95333–08600	20 – 29
95380–04600	38 – 5
95380–05600	25 – 3
	39 – 11
95380–06600	1 – 9
	39 – 15
95380–10600	30 – 60

PART NO. N° PIECES	REF. NO.
95380–12600	26 – 51
95380–14700	36 – 16
95680–05100	25 – 11
95707–06500	2 – 11
95780–10300	27 – 5
95895–06030	25 – 7
97013–06025	6 – 16
	18 – 25
97013–08045	20 – 27
97027–06025	31 – 12
97075–06020	4 – 17
97075–06030	23 – 30
97075–08035	30 – 25
97075–10045	27 – 34
	30 – 3
97095–06010	9 – 25
	10 – 21
	18 – 15
	26 – 7
	30 – 41
97095–06012	17 – 25
97095–06014	14 – 14
	18 – 7
	24 – 18
	26 – 27
	30 – 37
97095–06016	1 – 11
	8 – 10
	14 – 16
	16 – 18
	18 – 2
97095–06020	2 – 42
	17 – 5
	19 – 4
	21 – 35
	24 – 21
	30 – 13
	31 – 26
97095–06025	2 – 28
	26 – 4
97095–06030	4 – 36
97095–06035	16 – 7
	19 – 7
	23 – 6
97095–06040	2 – 52
	31 – 20
97095–06045	2 – 49
	24 – 15

PART NO. N° PIECES	REF. NO.
97095–08014	5 – 9
97095–08020	18 – 5
	32 – 72
	34 – 78
97095–08025	32 – 41
	34 – 43
97095–08035	31 – 4
97095–10045	26 – 29
	27 – 23
	33 – 5
	35 – 5
97575–08540	4 – 20
97575–08560	31 – 3
97575–08590	30 – 19
97575–10535	30 – 5
97780–60520	22 – 18
97780–60620	7 – 7
	18 – 19
97780–60625	18 – 31
97880–06016	30 – 50
97885–04016	23 – 16
97885–06010	16 – 15
	21 – 4
	26 – 13
97885–06012	26 – 10
97885–06016	27 – 3
98507–04008	2 – 18
	4 – 33
	12 – 14
98582–05008	13 – 24
98980–05010	39 – 9
98980–06020	39 – 14
99001–03600	28 – 40
99001–08600	32 – 16
	34 – 18
99530–08012	16 – 6
99530–10114	9 – 28
	10 – 24
9E450–04433	38 – 2
9E450–04533	38 – 3

PART NO. N° PIECES	REF. NO.

F200A/F225A
FL200A/FL225A
PARTS CATALOGUE
©2003 by Yamaha Motor Co., Ltd.
1st edition, November 2003
All rights reserved.
Any reprinting or unauthorized use
without the written permission of
Yamaha Motor Co., Ltd.
is expressly prohibited.
Printed in Japan.

F200A/F225A
FL200A/FL225A
CATALOGUE DE PIECES DETACHEES
©2003 par Yamaha Motor Co., Ltd.
1re édition, novembre 2003
Tous droits réservés
Toute réimpression ou utilisation
non autorisée sans la permission écrite
de la Yamaha Motor Co., Ltd.
est formellement interdite.
Imprimé au Japon