YAMAHA

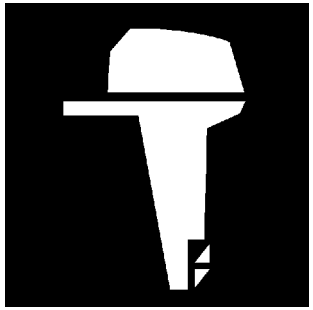

PARTS CATALOGUE

F200TRB (60L2) /F200A '03(60L2)
F225TRB (69J2) /F225A '03(69J2)
LF200TRB (60M2)/FL200A '03(60M2)
LF225TRB (69K2) /FL225A '03(69K2)

2B60L-100E1

YAMAHA GENUINE Parts & Accessories

A1

FOREWORD

This Parts Catalogue is related to the parts for the model(s) in the below frame. When you are ordering replacement parts, please refer to this Parts Catalogue and quote both part numbers and part names correctly.

F200TRB(60L2), F225TRB(69J2), LF200TRB(60M2), LF225TRB(69K2), F200A'03(60L2), F225A'03(69J2), FL200A'03(60M2), FL225A'03(69K2)

1. Modifications or additions which have been made after issue of the Parts Catalogue will be announced in the Yamaha Parts News.
   It is advisable that you make necessary corrections to the Parts Catalogue according to the Yamaha Parts News.

2. Abbreviations
   The Following abbreviations are used in this Parts Catalogue.

   "UR" Use specified parts number.

   "UN" Use as many as needed.

   "AP" Alternate Parts

   "LM" Local Made
   (Parts need to be ordered locally)

   "O/S" Over Size

3. Parts, which are to be supplied in an assembly, are listed with a dot(.) in front of the part name as shown below.

   EXAMPLE

   CARBURETOR ASSY

   .JET, PILOT

   .NOZZLE, MAIN

4. Number of component for assembly
   The numeral appearing to the right of each component part indicates the quantity of parts for each assembly unit.

   EXAMPLE

PART NO.	DESCRIPTION	E	EH	EHT			REMARKS
6E0-85500-70	C.D.I. MAGNETO ASSY	1					
6E0-85550-70	.ROTOR ASSY	1					
6E0-15723-00-94	..PULLY, STARTER	1					

5. Quantity Column Information

NAME for Q'TY COLUMN	APPLICABLE MODEL
69J2	F225TRB, F225AET
60L2	F200TRB, F200AET
69K2	LF225TRB, FL225AET
60M2	LF200TRB, FL200AET

6. Applicable Starting Serial No. and Color Code
   1) Engine Starting Sserial No.

F200TXRB	60L	: 1000001	F200AET X	60L	: 1000001
F225TXRB	69J	: 1000001	F225AET X/U	69J	: 1000001
F225TURB	69J	: 1000001	FL200AET X	60M	: 1000001
LF200TXRB	60M	: 1000001	FL225AET X/U	69K	: 1000001
LF225TXRB	69K	: 1000001			
LF225TURB	69K	: 1000001			

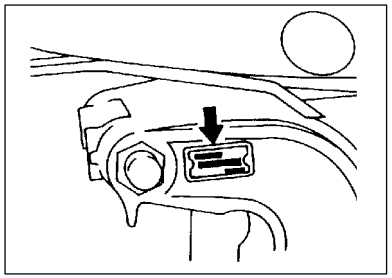

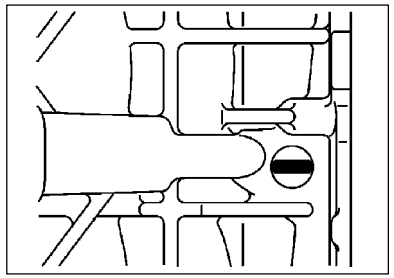

   2) Color Code

Color Code	Color Name	Abbreviation
004D	DARK BLUISH GRAY METALLIC 2	DBNM2

7. Note that the illustrations for reference in finding parts numbers, not to be used for assembling. When assembling, please use the applicable service manual.

8. The asterisk (*) before a reference number indicates modification items after the first edition.

CONTENTS

SHEET 1/2

TOP COWLING A4
CYLINDER. CRANKCASE 1 ..... A6
CRANKSHAFT. PISTON B2
CYLINDER. CRANKCASE 2 ..... B3
CYLINDER. CRANKCASE 3 ..... B5
VALVE B6
INTAKE C2
THROTTLE BODY ASSY 1 ..... C4
THROTTLE BODY ASSY 2 ..... C6
THROTTLE BODY ASSY 3 ..... D1
FUEL INJECTION PUMP 1 ..... D2
FUEL INJECTION PUMP 2 ..... D4
FUEL 1 ..... D5
FUEL 2 ..... D6
GENERATOR D7
ELECTRICAL 1 ..... E2
ELECTRICAL 2 ..... E4
ELECTRICAL 3 ..... E6
STARTING MOTOR E7
BOTTOM COWLING 1 ..... F2
BOTTOM COWLING 2 ..... F4
CONTROL 1 ..... F5
CONTROL 2 ..... F7

INDEX

NUMERICAL INDEX G1

SHEET 2/2

CONTROL 3 ..... A4*
BRACKET 1 ..... A5*
BRACKET 2 ..... A7*
POWER TRIM & TILT ASSY 1 ..... B2*
POWER TRIM & TILT ASSY 2 ..... B6*
UPPER CASING B7*
OIL PAN C3*
LOWER CASING. DRIVE 1 ..... C4*
LOWER CASING. DRIVE 2 ..... D1*
LOWER CASING. DRIVE 3 ..... D3*
LOWER CASING. DRIVE 4 ..... D7*
STEERING GUIDE ATTACHMENT 1 ..... E2*
STEERING GUIDE ATTACHMENT 2 ..... E3*
REMOTE CONTROL BOX E4*
METER E5*
SWITCH. PANEL 1 ..... E7*
SWITCH. PANEL 2 ..... F1*
SWITCH. PANEL 3 ..... F2*
REPAIR KIT 1 ..... F3*
REPAIR KIT 2 ..... F4*

INDEX

NUMERICAL INDEX G1*

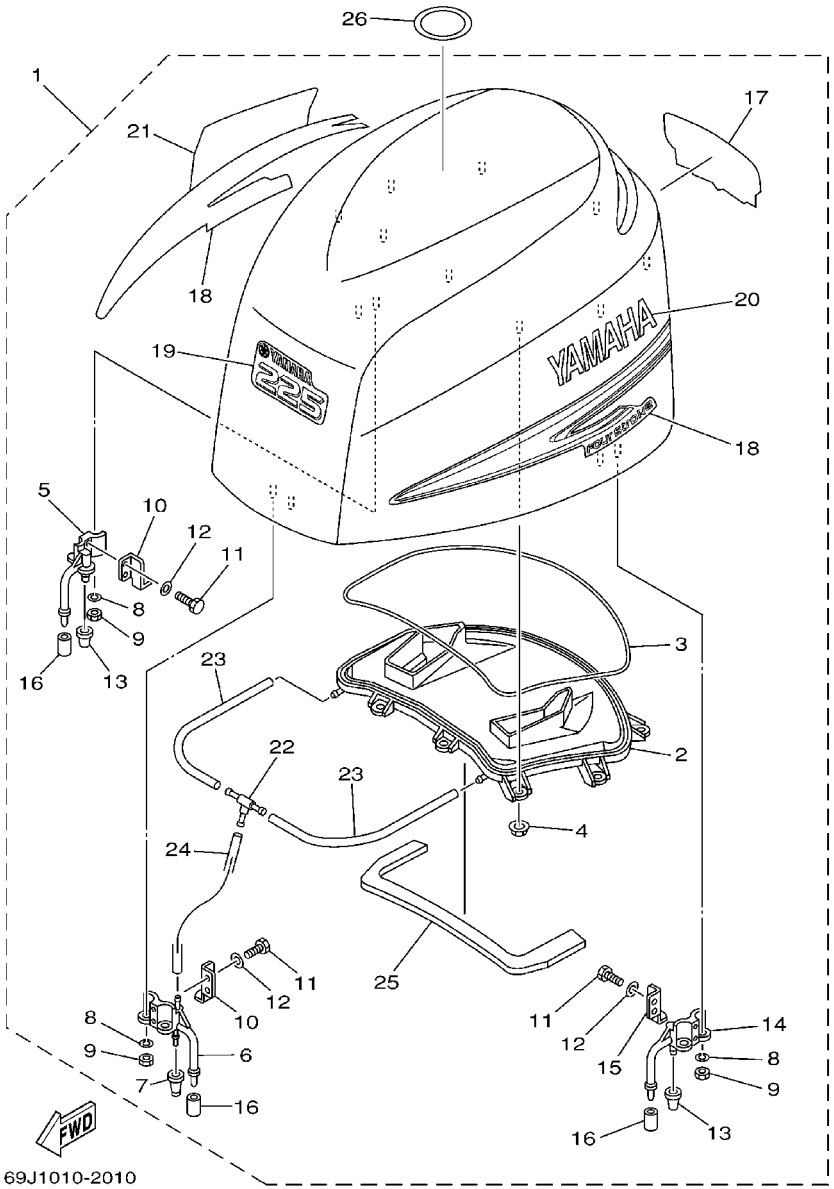

FIG. 1 TOP COWLING

REF. NO.	PART NO.	DESCRIPTION	69J2	60L2	69K2	60M2		REMARKS
1	69J–42610–00–8D	TOP COWLING ASSY	1		1			
	60L–42610–00–8D	TOP COWLING ASSY		1		1		
2	69J–42613–00	.MOLDING, AIR DUCT	1	1	1	1		
3	69J–42629–00	.SEAL	1	1	1	1		
4	90179–06M28	.NUT	9	9	9	9		
5	68F–42647–01–94	.HOLDER, CLAMP BAND	1	1	1	1		
6	69J–42647–00–94	.HOLDER, CLAMP BAND	1	1	1	1		
7	69J–42663–00	.DAMPER	1	1	1	1		
8	92990–06100	.WASHER, SPRING	6	6	6	6		
9	95380–06600	.NUT, HEXAGON	6	6	6	6		
10	68F–42651–00	.HOOK	2	2	2	2		
11	97095–06016	.BOLT	6	6	6	6		
12	92995–06600	.WASHER	6	6	6	6		
13	68F–42663–00	.DAMPER	2	2	2	2		
14	68F–42648–01–94	.HOLDER, CLAMP BAND	1	1	1	1		
15	67F–42652–00	.HOOK	1	1	1	1		
16	67F–13448–00	.CAP	3	3	3	3		
17	69J–42678–00	.GRAPHIC, REAR	1		1			
	60L–42678–00	.GRAPHIC, REAR		1		1		
18	69J–W0070–00	.GRAPHIC SET	1	1	1	1		
19	69J–42677–00	.GRAPHIC, FRONT	1		1			
	60L–42677–00	.GRAPHIC, FRONT		1		1		
20	69J–42681–00	.MARK, COWLING	1	1	1	1		
21	69J–42682–00	.MARK, COWLING	1	1	1	1		
22	69J–24378–00	.PIPE, JOINT 4	1	1	1	1		
23	90445–11020	.HOSE	2	2	2	2		
24	90445–11021	.HOSE	1	1	1	1		

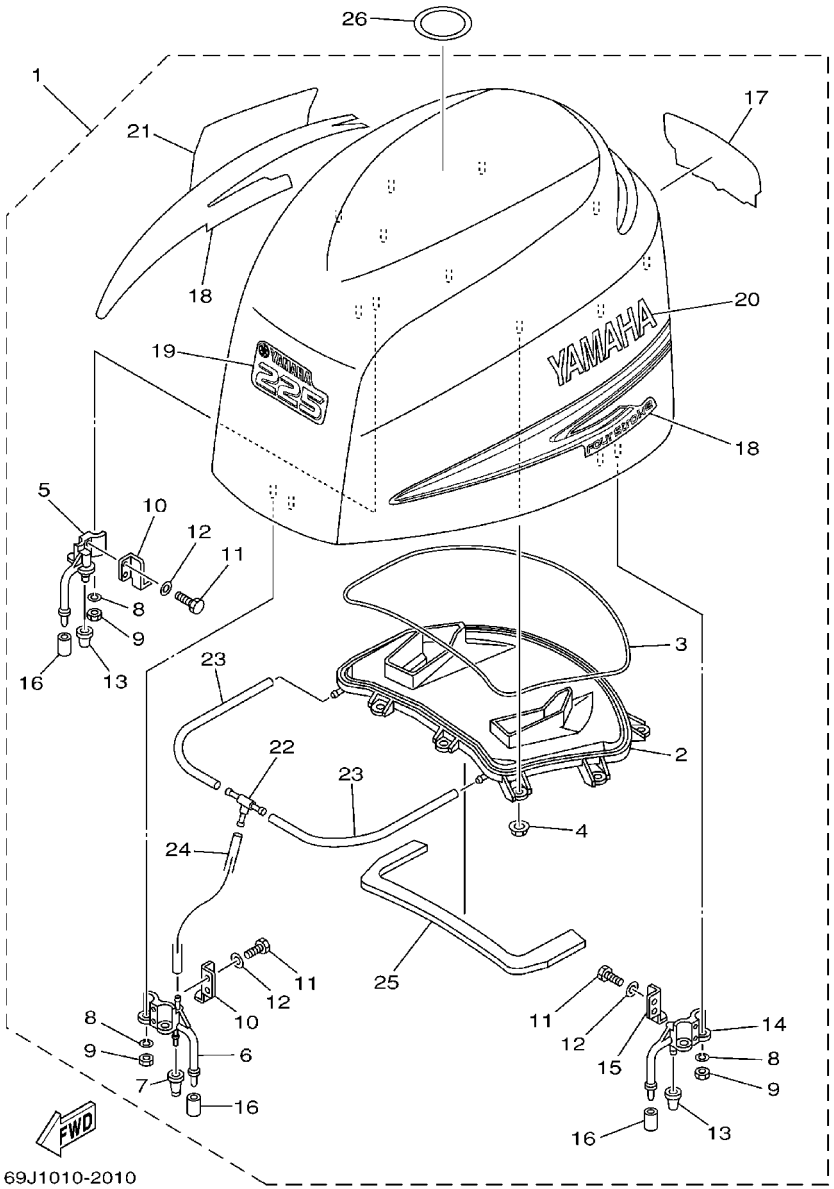

FIG. 1 TOP COWLING

REF. NO.	PART NO.	DESCRIPTION	69J2	60L2	69K2	60M2		REMARKS
25	69J–42617–00	.DAMPER, FORM	1	1	1	1		
26	67F–13434–02	LABEL, CAUTION	1	1	1	1		

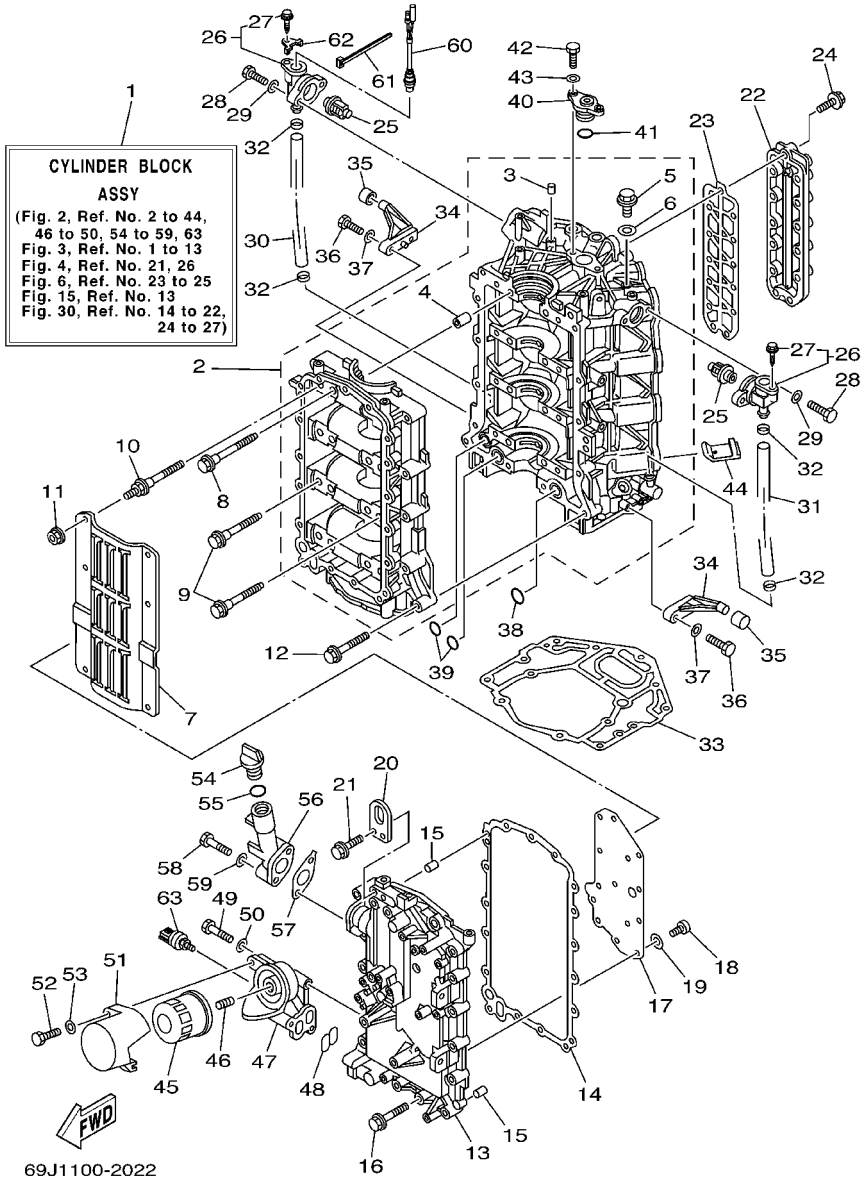

FIG. 2 CYLINDER. CRANKCASE 1

REF. NO.	PART NO.	DESCRIPTION	69J2	60L2	69K2	60M2		REMARKS
1	69J–W009B–01–1S	CYLINDER BLOCK ASSY	1	1	1	1		
2	69J–15100–00–1S	CRANKCASE ASSY	1	1	1	1		
3	93606–12019	.PIN, DOWEL	1	1	1	1		
4	91814–18001	.PIN, DOWEL	8	8	8	8		
5	90340–14M06	.PLUG, STRAIGHT SCREW	1	1	1	1		
6	90430–14115	.GASKET	1	1	1	1		
7	69J–15123–00	PLATE, BUFFLE 1	1	1	1	1		
8	69J–15187–00	BOLT	8	8	8	8		
9	69J–15481–00	BOLT 1	2	2	2	2		
10	69J–15482–00	BOLT 2	6	6	6	6		
11	95707–06500	NUT, FLANGE	6	6	6	6		
12	90119–08M66	BOLT, WITH WASHER	13	13	13	13		
13	69J–15411–00–94	COVER, CRANKCASE 1	1	1	1	1		
14	69J–15451–00	GASKET, CRANKCASE COVER 1	1	1	1	1		
15	93606–12019	PIN, DOWEL	2	2	2	2		
16	90119–08009	BOLT, WITH WASHER	17	17	17	17		
17	69J–11168–00	COVER, BREATHER	1	1	1	1		
18	98507–04008	SCREW	14	14	14	14		
19	92907–04600	WASHER	14	14	14	14		
20	69J–11119–00	HANGER, ENGINE	1	1	1	1		
21	90119–06MA2	BOLT, WITH WASHER	2	2	2	2		
22	69J–1131C–00–1S	COVER, JOINT	1	1	1	1		
23	69J–1131B–00	GASKET, COVER	1	1	1	1		
24	90119–06MA4	BOLT, WITH WASHER	13	13	13	13		
25	67F–12411–00	THERMOSTAT	2	2	2	2		
26	69J–1240H–00–1S	COVER ASSEMBLY	2	2	2	2		
27	90109–06M86	.BOLT	1	1	1	1		

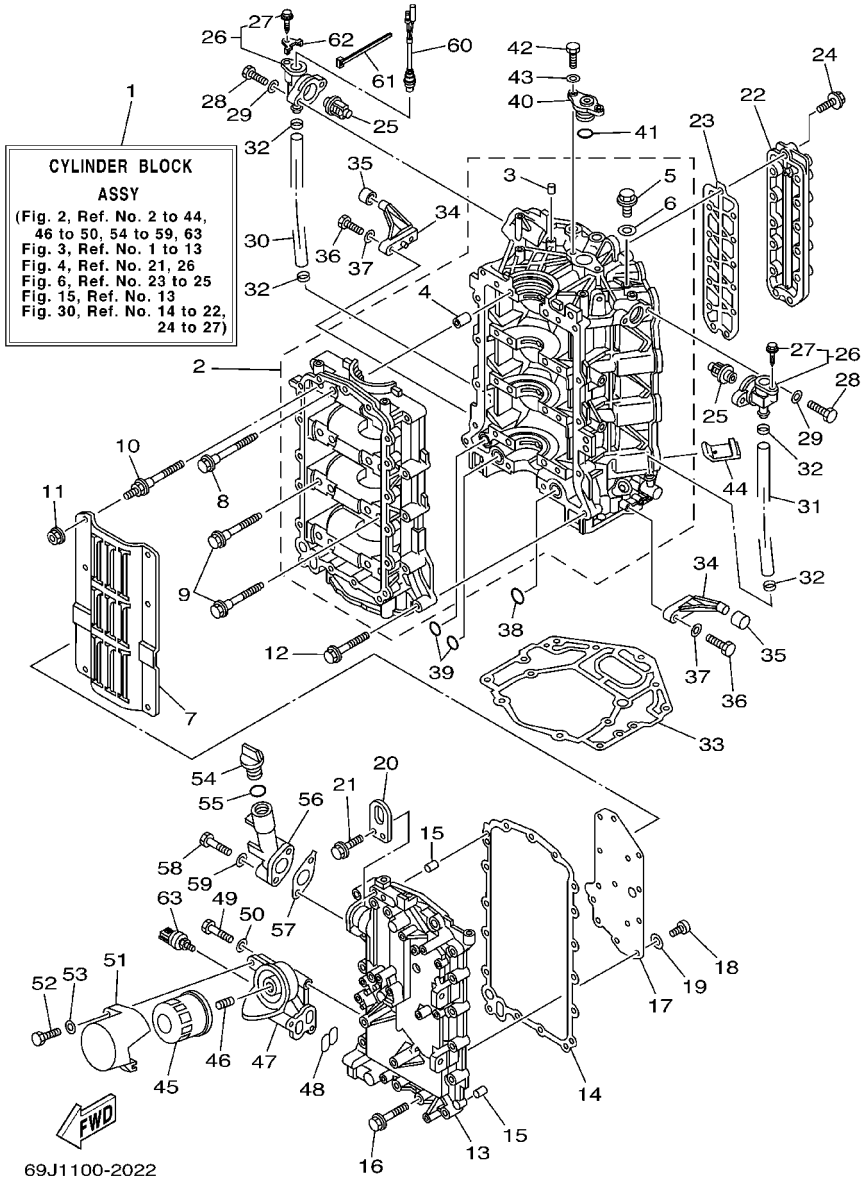

FIG. 2 CYLINDER. CRANKCASE 1

REF. NO.	PART NO.	DESCRIPTION	69J2	60L2	69K2	60M2		REMARKS
28	97095-06025	BOLT	4	4	4	4		
29	92995-06600	WASHER	4	4	4	4		
30	69J-1243A-00	HOSE 1	1	1	1	1		
31	69J-1243E-00	HOSE 2	1	1	1	1		
32	90465-11M10	CLAMP	4	4	4	4		
33	69J-11351-00	GASKET, CYLINDER	1	1	1	1		
34	67F-42761-00-94	STOPPER	2	2	2	2		
35	68F-44533-00	DAMPER, UPPER MOUNT RUBBER	2	2	2	2		
36	97095-06025	BOLT	4	4	4	4		
37	92995-06600	WASHER	4	4	4	4		
38	93210-25552	O-RING	1	1	1	1		
39	93210-19MJ1	O-RING	2	2	2	2		
40	69J-11313-00-94	PLUG, BLIND	1	1	1	1		
41	93210-25647	O-RING	1	1	1	1		
42	97095-06020	BOLT	2	2	2	2		
43	92995-06600	WASHER	2	2	2	2		
44	69J-14664-00	GROMMET, WATER SHUT	2	2	2	2		
45	69J-13440-00	ELEMENT ASSY, OIL CLEANER	1	1	1	1		
46	69J-12858-00	BOLT, UNION	1	1	1	1		
47	69J-13446-00-94	CONNECTOR	1	1	1	1		
48	69J-13477-00	GASKET	1	1	1	1		
49	97095-06045	BOLT	3	3	3	3		
50	92995-06600	WASHER	3	3	3	3		
51	69J-13447-00	COVER, OIL ELEMENT	1	1	1	1		
52	97095-06040	BOLT	1	1	1	1		
53	92995-06600	WASHER	1	1	1	1		
54	6G8-15363-00	PLUG, OIL	1	1	1	1		

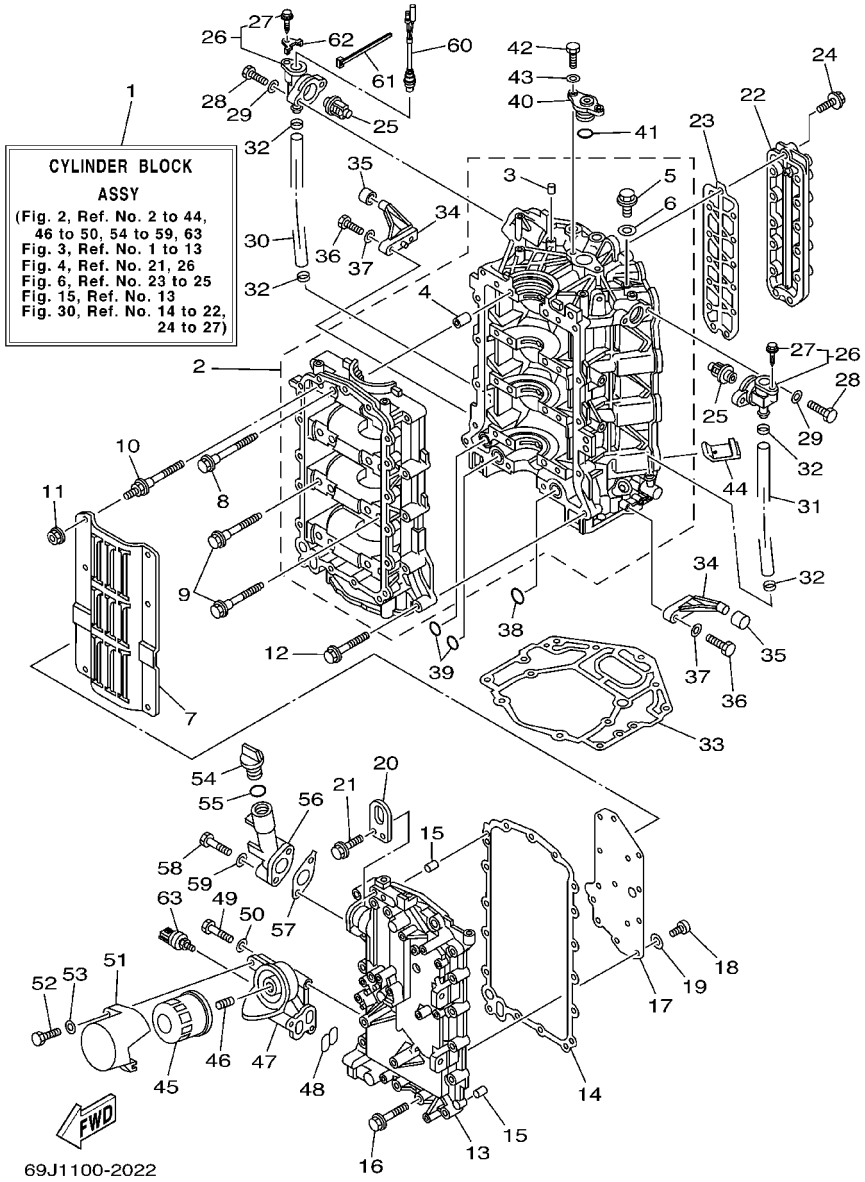

FIG. 2 CYLINDER. CRANKCASE 1

REF. NO.	PART NO.	DESCRIPTION	69J2	60L2	69K2	60M2		REMARKS
55	93210-24M79	O-RING	1	1	1	1		
56	69J-15319-00-1S	JOINT	1	1	1	1		
57	69J-15364-A0	GASKET, OIL PLUG	1	1	1	1		
58	97095-06045	BOLT	2	2	2	2		
59	92995-06600	WASHER	2	2	2	2		
60	69J-82560-00	THERMO SWITCH ASSY	2	2	2	2		
61	90465-11M10	CLAMP	2	2	2	2		
62	6E9-82588-00	PLATE	2	2	2	2		
63	69J-83651-00	SENDER, OIL PRESSURE	1	1	1	1		

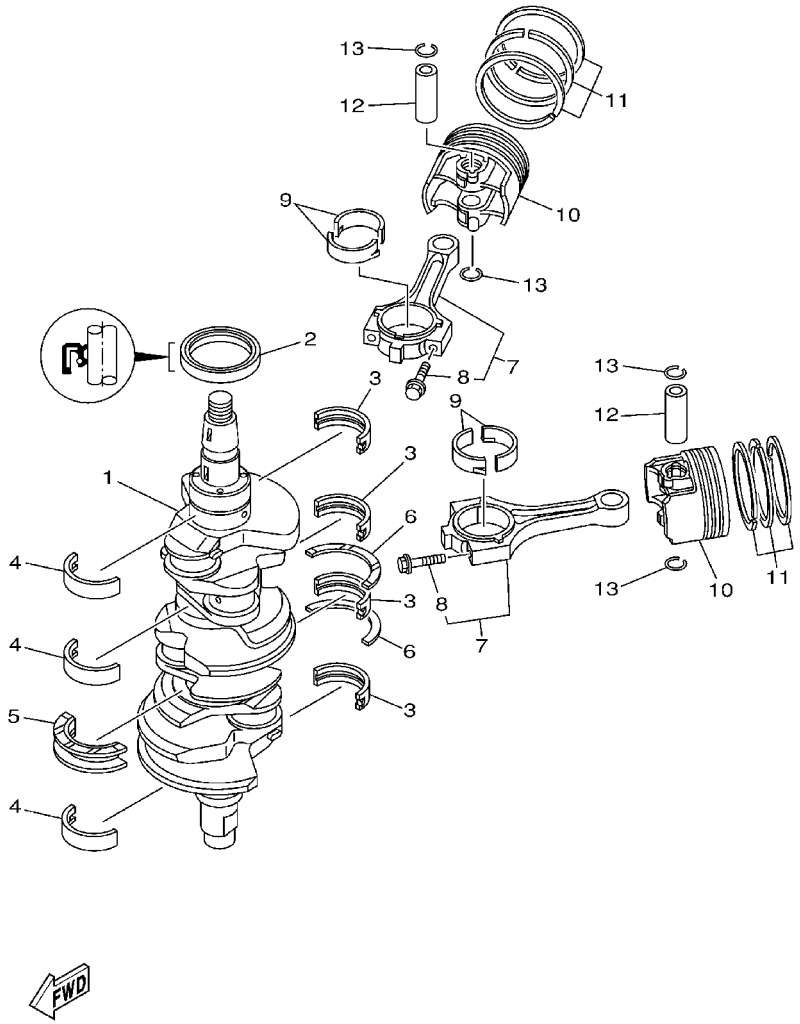

FIG. 3 CRANKSHAFT. PISTON

REF. NO.	PART NO.	DESCRIPTION	69J2	60L2	69K2	60M2		REMARKS
1	69J–11411–00	CRANKSHAFT	1	1	1	1		
2	93102–63004	OIL SEAL	1	1	1	1		
3	69J–11416–00	PLANE BEARING, CRANKSHAFT 1	4	4	4	4		UR #1
	69J–11416–10	PLANE BEARING, CRANKSHAFT 1	4	4	4	4		UR #2
	69J–11416–20	PLANE BEARING, CRANKSHAFT 1	4	4	4	4		UR #3
4	69J–11417–00	PLANE BEARING, CRANKSHAFT 2	3	3	3	3		UR #1
	69J–11417–10	PLANE BEARING, CRANKSHAFT 2	3	3	3	3		UR #2
	69J–11417–20	PLANE BEARING, CRANKSHAFT 2	3	3	3	3		UR #3
5	69J–11426–00	PLANE BEARING, CRANKSHAFT 1	1	1	1	1		UR #1
	69J–11426–10	PLANE BEARING, CRANKSHAFT 1	1	1	1	1		UR #2
	69J–11426–20	PLANE BEARING, CRANKSHAFT 1	1	1	1	1		UR #3
6	69J–11427–00	PLANE BEARING, CRANKSHAFT 2	2	2	2	2		
7	69J–W1165–00	CONNECTING ROD ASSY	6	6	6	6		
8	69J–11654–00	.BOLT, CONNECTING ROD	2	2	2	2		
9	69J–11656–00	PLANE BEARING, CONNECTING ROD	12	12	12	12		UR YELLOW
	69J–11656–10	PLANE BEARING, CONNECTING ROD	12	12	12	12		UR GREEN
	69J–11656–20	PLANE BEARING, CONNECTING ROD	12	12	12	12		UR BLUE
10	69J–11631–00–B0	PISTON (STD)	6	6	6	6		
11	69J–11603–00	PISTON RING SET (STD)	6	6	6	6		
12	69J–11633–00	PIN, PISTON	6	6	6	6		
13	69J–11634–00	CLIP, PISTON PIN	12	12	12	12		

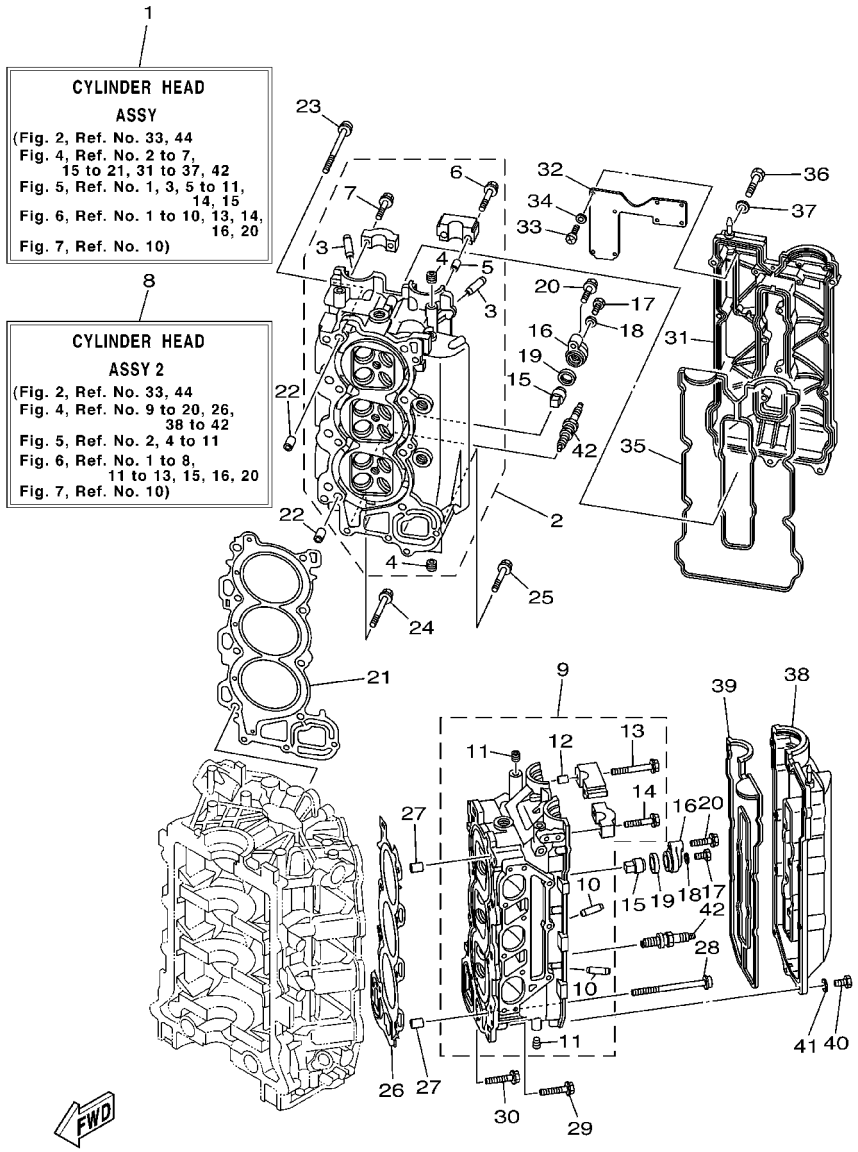

69J1100-2042

FIG. 4 CYLINDER. CRANKCASE 2

REF. NO.	PART NO.	DESCRIPTION	69J2	60L2	69K2	60M2		REMARKS
1	69J–W009A–01–1S	CYLINDER HEAD ASSY	1	1	1	1		
2	69J–11110–00–94	CYLINDER HEAD ASSY	1	1	1	1		
3	69J–11133–10	.GUIDE, INTAKE VALVE	12	12	12	12		
4	90344–51019	.PLUG, TAPER SCREW	5	5	5	5		
5	91809–08006	.PIN, DOWEL	2	2	2	2		
6	90119–07235	.BOLT, WITH WASHER	2	2	2	2		
7	90119–07234	.BOLT, WITH WASHER	18	18	18	18		
8	69J–W009C–01–1S	CYLINDER HEAD ASSY 2	1	1	1	1		
9	69J–11120–00–94	CYLINDER HEAD ASSY 2	1	1	1	1		
10	69J–11133–10	.GUIDE, INTAKE VALVE	12	12	12	12		
11	90344–51019	.PLUG, TAPER SCREW	5	5	5	5		
12	91809–08006	.PIN, DOWEL	2	2	2	2		
13	90119–07235	.BOLT, WITH WASHER	2	2	2	2		
14	90119–07234	.BOLT, WITH WASHER	14	14	14	14		
15	67F–11325–00	ANODE	4	4	4	4		
16	69J–11327–00–94	COVER, ANODE	4	4	4	4		
17	97075–06020	BOLT	4	4	4	4		
18	92995–06600	WASHER	4	4	4	4		
19	67F–11328–00	GROMMET, ANODE	4	4	4	4		
20	97575–08540	BOLT, WITH WASHER	4	4	4	4		
21	69J–11181–01	GASKET, CYLINDER HEAD 1	1	1	1	1		
22	90387–10M08	COLLAR	2	2	2	2		
23	90155–10001	SCREW, FLAT FILLISTER	8	8	8	8		
24	90119–08M91	BOLT, WITH WASHER	2	2	2	2		
25	90119–08021	BOLT, WITH WASHER	1	1	1	1		
26	69J–11182–01	GASKET, CYLINDER HEAD 2	1	1	1	1		
27	90387–10M08	COLLAR	2	2	2	2		

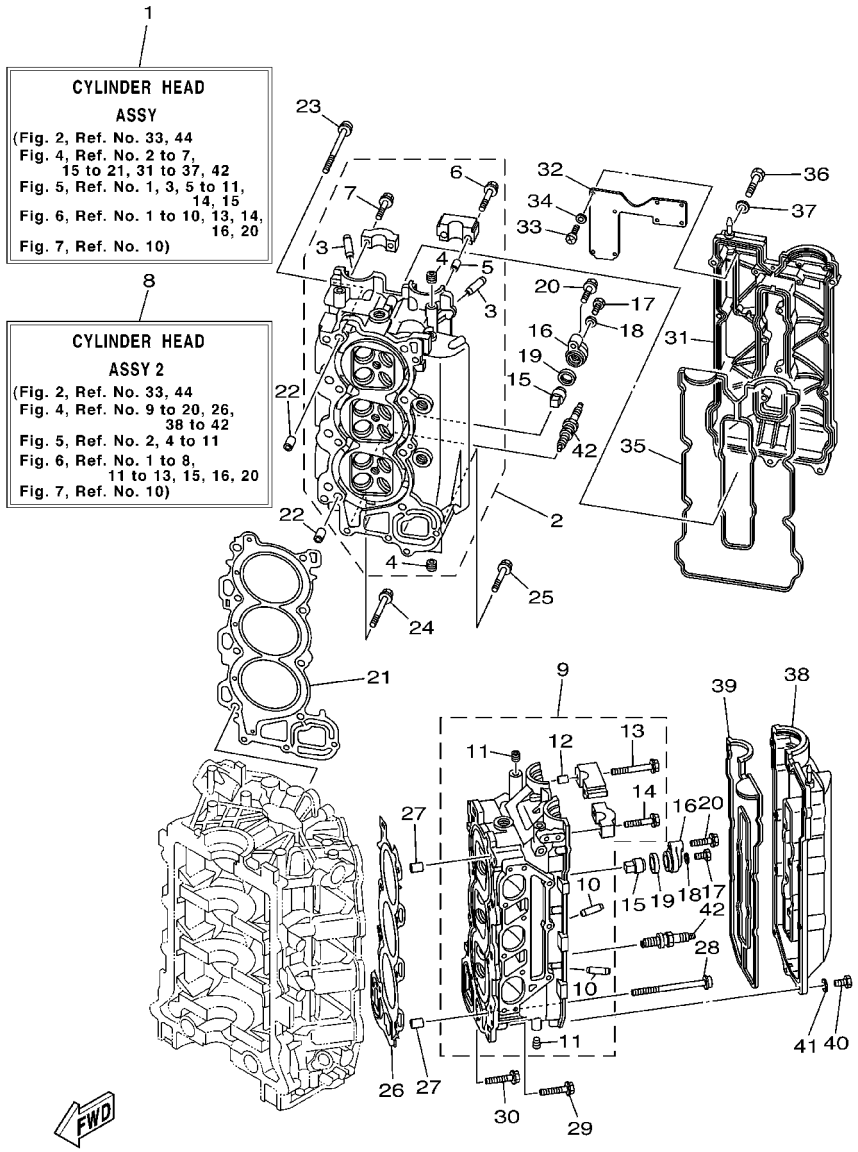

FIG. 4 CYLINDER. CRANKCASE 2

REF. NO.	PART NO.	DESCRIPTION	69J2	60L2	69K2	60M2		REMARKS
28	90155-10001	SCREW, FLAT FILLISTER	8	8	8	8		
29	90119-08M91	BOLT, WITH WASHER	2	2	2	2		
30	90119-08021	BOLT, WITH WASHER	1	1	1	1		
31	69J-11191-00-1S	COVER, CYLINDER HEAD 1	1	1	1	1		
32	69J-11135-00	PLATE, BREATHER 3	1	1	1	1		
33	98507-04008	SCREW	8	8	8	8		
34	92907-04600	WASHER	8	8	8	8		
35	69J-11193-00	GASKET, HEAD COVER 1	1	1	1	1		
36	97095-06030	BOLT	14	14	14	14		
37	92995-06600	WASHER	14	14	14	14		
38	69J-11192-00-1S	COVER, CYLINDER HEAD 2	1	1	1	1		
39	69J-11194-00	GASKET, HEAD COVER 2	1	1	1	1		
40	97095-06030	BOLT	14	14	14	14		
41	92995-06600	WASHER	14	14	14	14		
42	94702-00391	PLUG, SPARK (NGK LFR5A-11)	6	6	6	6		

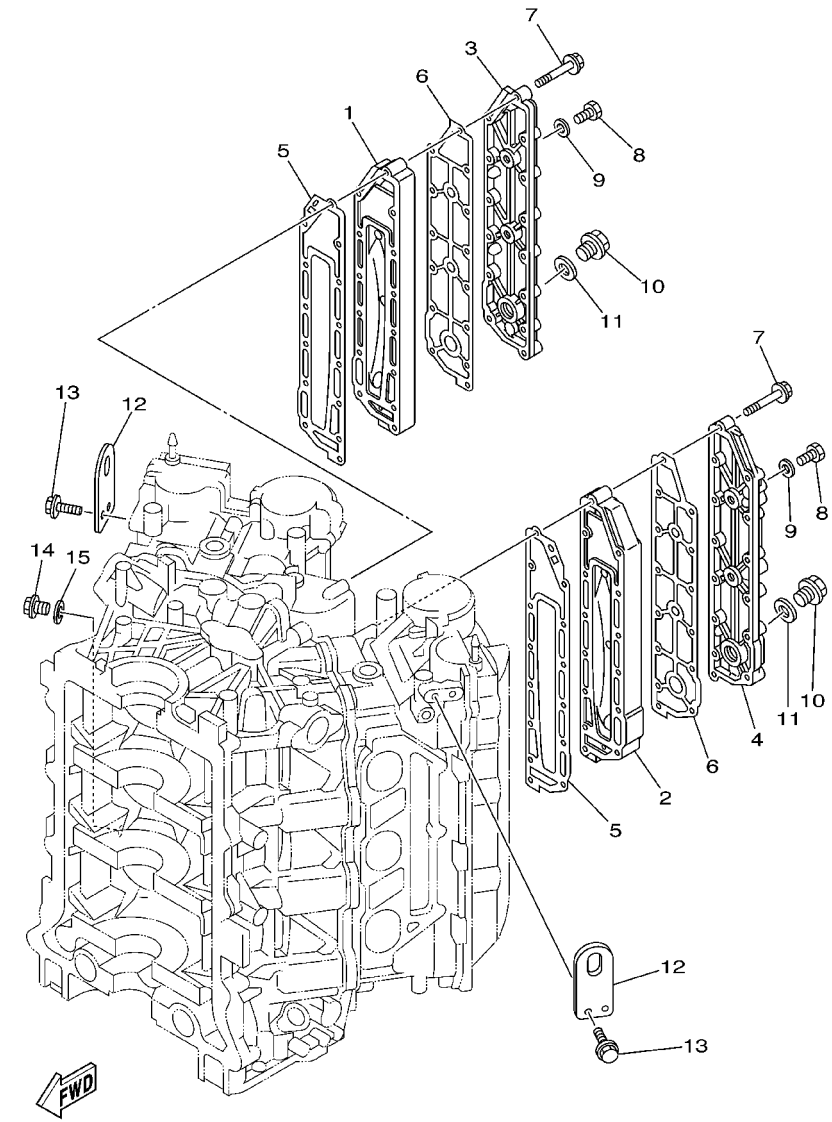

69J2010-3050

FIG. 5 CYLINDER. CRANKCASE 3

REF. NO.	PART NO.	DESCRIPTION	69J2	60L2	69K2	60M2		REMARKS
1	69J–41111–00–1S	INNER COVER, EXHAUST	1	1	1	1		
2	69J–41121–00–1S	INNER COVER,EXHAUST	1	1	1	1		
3	69J–41113–00–1S	OUTER COVER, EXHAUST	1	1	1	1		
4	69J–41123–00–1S	OUTER COVER, EXHAUST	1	1	1	1		
5	69J–41112–00	GASKET, EXHAUST INNER COVER	2	2	2	2		
6	69J–41114–00	GASKET, EXHAUST OUTER COVER	2	2	2	2		
7	90119–06027	BOLT, WITH WASHER	28	28	28	28		
8	97095–08014	BOLT	4	4	4	4		
9	90430–08143	GASKET	4	4	4	4		
10	90340–18M09	PLUG, STRAIGHT SCREW	2	2	2	2		
11	90430–18130	GASKET	2	2	2	2		
12	69J–1111E–00	HANGER, ENGINE 2	2	2	2	2		
13	90119–06MA2	BOLT, WITH WASHER	4	4	4	4		
14	90340–14M06	PLUG, STRAIGHT SCREW	1	1	1	1		
15	90430–14115	GASKET	1	1	1	1		

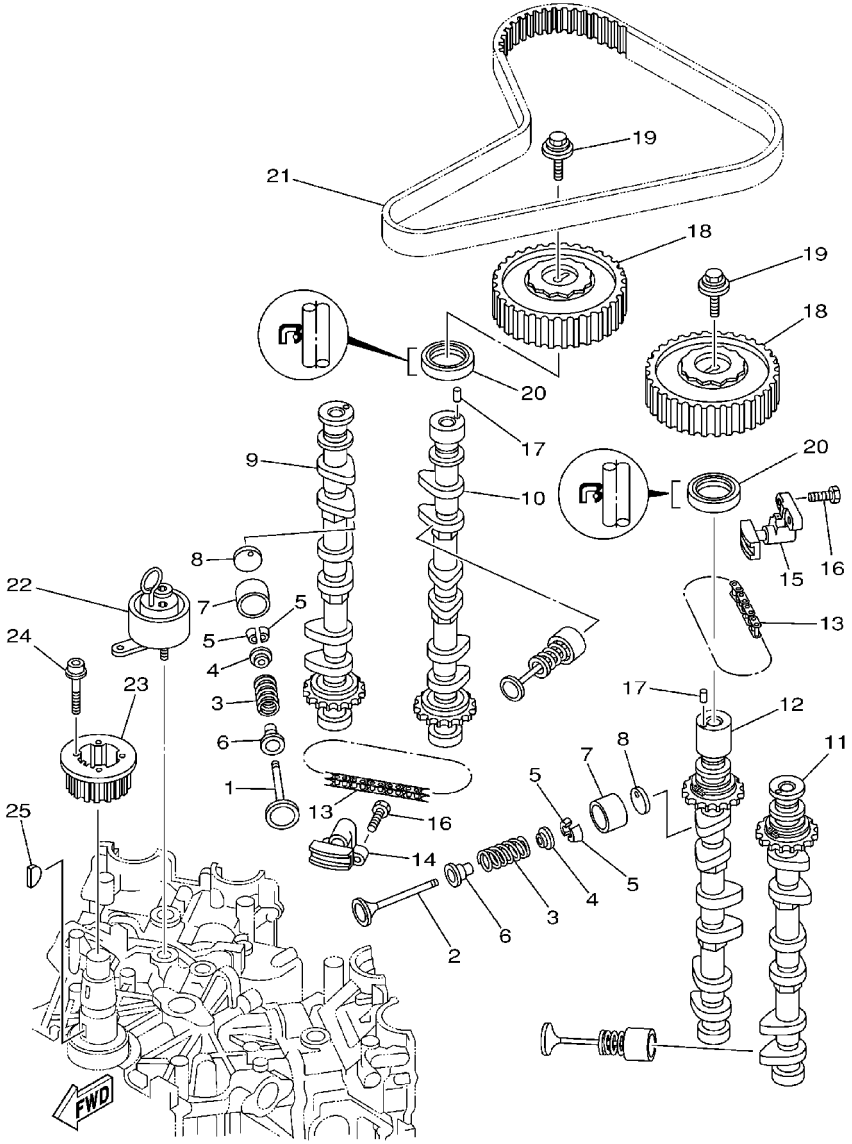

69J1010-2060

FIG. 6 VALVE

REF. NO.	PART NO.	DESCRIPTION	69J2	60L2	69K2	60M2		REMARKS
1	69J–12111–00	VALVE, INTAKE	12	12	12	12		
2	69J–12121–00	VALVE, EXHAUST	12	12	12	12		
3	69J–12113–00	SPRING, VALVE INNER	24	24	24	24		
4	69J–12117–00	RETAINER, VALVE SPRING	24	24	24	24		
5	69J–12118–00	COTTER, VALVE	48	48	48	48		
6	69J–12119–00	SEAL, VALVE STEM	24	24	24	24		
7	69J–12153–00	LIFTER, VALVE	24	24	24	24		
8	69J–12168–00	PAD, ADJUSTING (2.320)	24	24	24	24		UR
	69J–12168–10	PAD, ADJUSTING (2.340)	24	24	24	24		UR
	69J–12168–20	PAD, ADJUSTING (2.360)	24	24	24	24		UR
	69J–12168–30	PAD, ADJUSTING (2.380)	24	24	24	24		UR
	69J–12168–40	PAD, ADJUSTING (2.400)	24	24	24	24		UR
	69J–12168–50	PAD, ADJUSTING (2.420)	24	24	24	24		UR
	69J–12168–60	PAD, ADJUSTING (2.440)	24	24	24	24		UR
	69J–12168–70	PAD, ADJUSTING (2.460)	24	24	24	24		UR
	69J–12168–80	PAD, ADJUSTING (2.480)	24	24	24	24		UR
	69J–12168–90	PAD, ADJUSTING (2.500)	24	24	24	24		UR
	69J–12168–A0	PAD, ADJUSTING (2.520)	24	24	24	24		UR
	69J–12168–B0	PAD, ADJUSTING (2.540)	24	24	24	24		UR
	69J–12168–C0	PAD, ADJUSTING (2.560)	24	24	24	24		UR
	69J–12168–D0	PAD, ADJUSTING (2.580)	24	24	24	24		UR
	69J–12168–E0	PAD, ADJUSTING (2.600)	24	24	24	24		UR
	69J–12168–F0	PAD, ADJUSTING (2.620)	24	24	24	24		UR
	69J–12168–G0	PAD, ADJUSTING (2.640)	24	24	24	24		UR
	69J–12168–H0	PAD, ADJUSTING (2.660)	24	24	24	24		UR
	69J–12168–J0	PAD, ADJUSTING (2.680)	24	24	24	24		UR
	69J–12168–K0	PAD, ADJUSTING (2.700)	24	24	24	24		UR

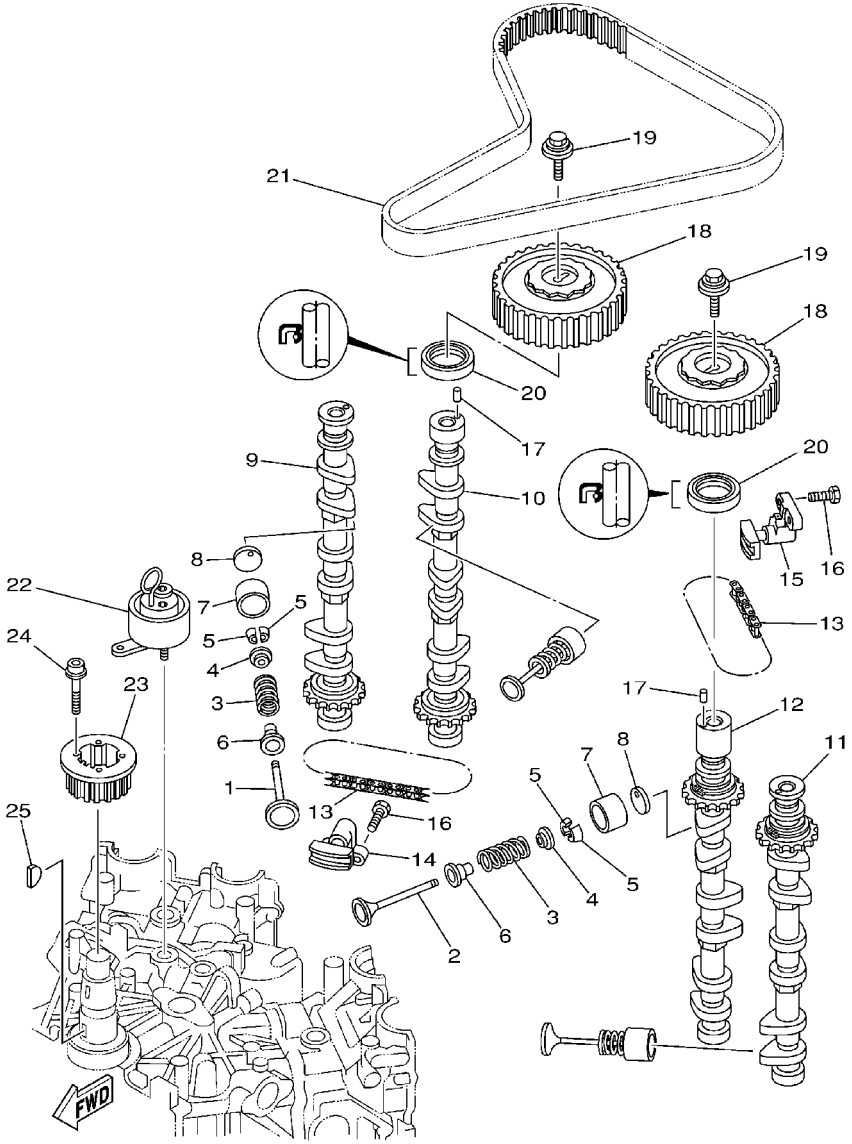

69J1010-2060

FIG. 6 VALVE

REF. NO.	PART NO.	DESCRIPTION	69J2	60L2	69K2	60M2		REMARKS
8	69J–12168–L0	PAD, ADJUSTING (2.720)	24	24	24	24		UR
	69J–12168–M0	PAD, ADJUSTING (2.740)	24	24	24	24		UR
	69J–12168–N0	PAD, ADJUSTING (2.760)	24	24	24	24		UR
	69J–12168–P0	PAD, ADJUSTING (2.780)	24	24	24	24		UR
	69J–12168–R0	PAD, ADJUSTING (2.800)	24	24	24	24		UR
	69J–12168–S0	PAD, ADJUSTING (2.820)	24	24	24	24		UR
	69J–12168–T0	PAD, ADJUSTING (2.840)	24	24	24	24		UR
	69J–12168–U0	PAD, ADJUSTING (2.860)	24	24	24	24		UR
	69J–12168–V0	PAD, ADJUSTING (2.880)	24	24	24	24		UR
	69J–12168–W0	PAD, ADJUSTING (2.900)	24	24	24	24		UR
	69J–12168–X0	PAD, ADJUSTING (2.920)	24	24	24	24		UR
	69J–12168–Y0	PAD, ADJUSTING (2.940)	24	24	24	24		UR
	69J–12169–00	PAD, ADJUSTING (2.960)	24	24	24	24		UR
9	69J–12171–00	CAMSHAFT 1	1	1	1	1		
10	69J–12181–00	CAMSHAFT 2	1	1	1	1		
11	69J–12172–00	CAMSHAFT 3	1	1	1	1		
12	69J–12182–00	CAMSHAFT 4	1	1	1	1		
13	94581–99044	CHAIN	2	2	2	2		
14	69J–12210–00	TENSIONER ASSY, CAM CHAIN	1	1	1	1		
15	69J–12230–00	TENSIONER ASSY, CAM CHAIN 2	1	1	1	1		
16	97013–06025	BOLT	4	4	4	4		
17	93605–10108	PIN, DOWEL	2	2	2	2		
18	69J–11537–00	GEAR, DRIVEN	2	2	2	2		
19	90119–10M06	BOLT, WITH WASHER	2	2	2	2		
20	93102–38M59	OIL SEAL	2	2	2	2		
21	69J–46241–00	V–BELT	1	1	1	1		
22	69J–11590–00	TENSIONER ASSY	1	1	1	1		

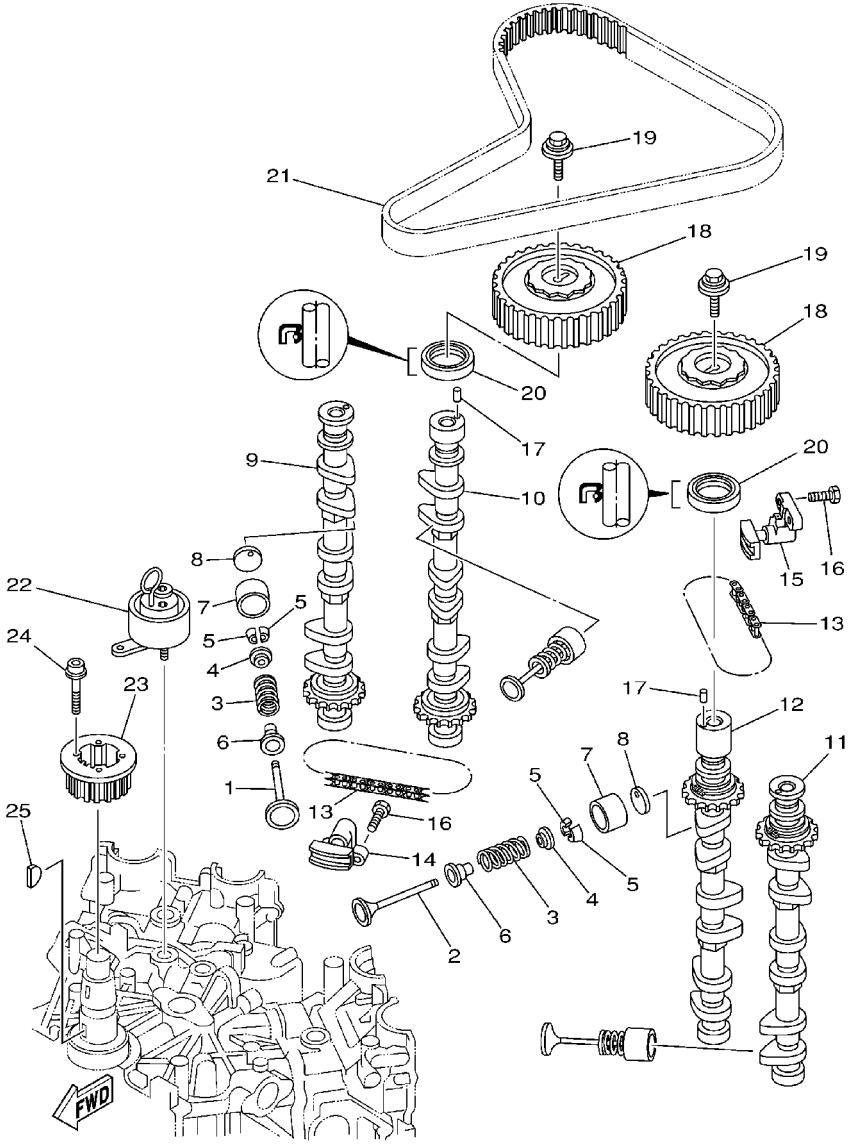

69J1010-2060

FIG. 6 VALVE

REF. NO.	PART NO.	DESCRIPTION	69J2	60L2	69K2	60M2		REMARKS
23	69J–11536–00	GEAR, DRIVE	1	1	1	1		
24	90110–05010	BOLT, HEXAGON SOCKET HEAD	4	4	4	4		
25	90280–04008	KEY, WOODRUFF	1	1	1	1		

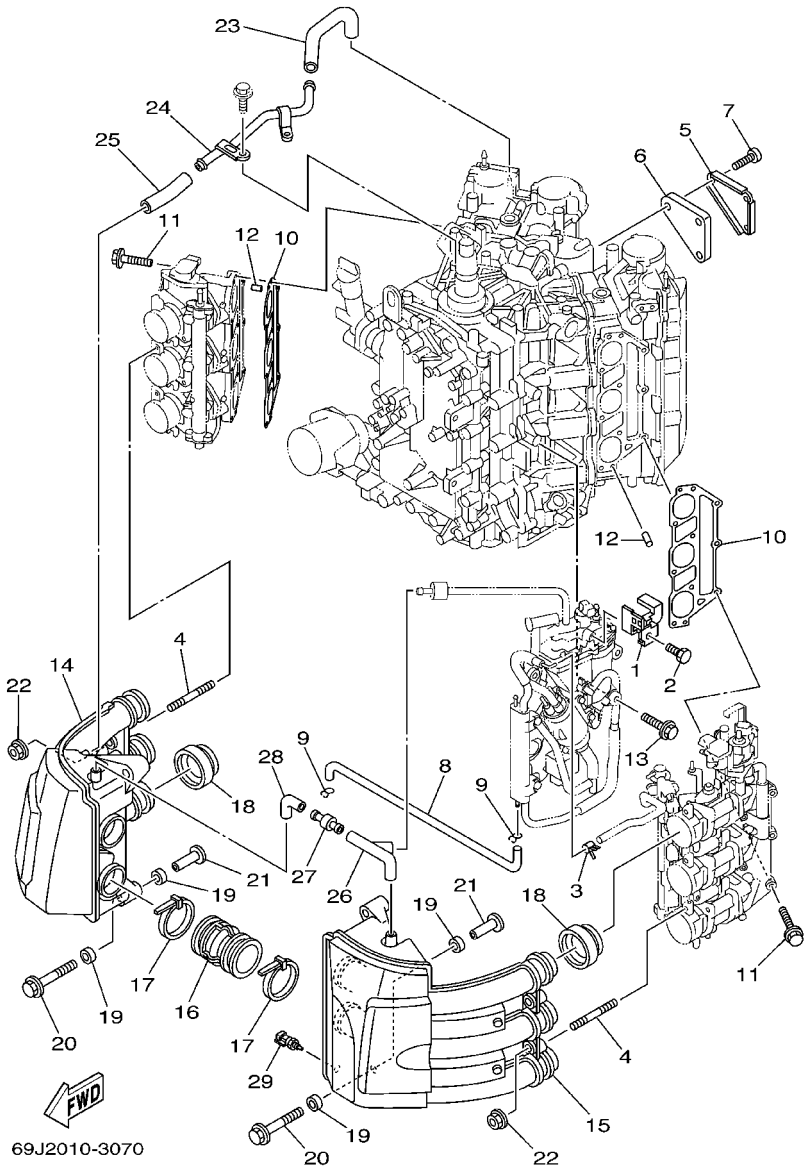

FIG. 7 INTAKE

REF. NO.	PART NO.	DESCRIPTION	69J2	60L2	69K2	60M2		REMARKS
1	69J–14146–10	PLATE	1	1	1	1		
2	69J–14162–00	BOLT, HOLDING	1	1	1	1		
3	68V–24519–00	CLIP	1	1	1	1		
4	90116–06032	BOLT, STUD	4	4	4	4		
5	69J–1442A–00	COVER, CLEANER CASE 3	1	1	1	1		
6	69J–14409–00	DAMPER	1	1	1	1		
7	97780–60620	SCREW, TAPPING	3	3	3	3		
8	69J–12483–00	PIPE 3	1	1	1	1		
9	90467–09M03	CLIP	2	2	2	2		
10	69J–13645–00	GASKET, MANIFOLD 1	2	2	2	2		
11	90119–08022	BOLT, WITH WASHER	18	18	18	18		
12	91690–50014	PIN, SPRING	4	4	4	4		
13	90119–06M24	BOLT, WITH WASHER	4	4	4	4		
14	69J–14440–00	SILENCER ASSY, INTAKE	1	1	1	1		
15	69J–1444F–00	SILENCER ASSY, INTAKE 2	1	1	1	1		
16	69J–14419–00	PIPE	2	2	2	2		
17	90465–11M52	CLAMP	4	4	4	4		
18	69J–14457–00	SEAL	6	6	6	6		
19	90386–08001	BUSH	8	8	8	8		
20	90119–06036	BOLT, WITH WASHER	4	4	4	4		
21	90387–06038	COLLAR	4	4	4	4		
22	90179–06M28	NUT	4	4	4	4		
23	69J–15373–00	PIPE, BREATHER	1	1	1	1		
24	69J–15394–00	PIPE, OIL VENT	1	1	1	1		
25	69J–15393–00	PIPE, BREATHER 2	1	1	1	1		
26	69J–15397–00	PIPE	1	1	1	1		
27	5EL–14467–00	SEAL	1	1	1	1		

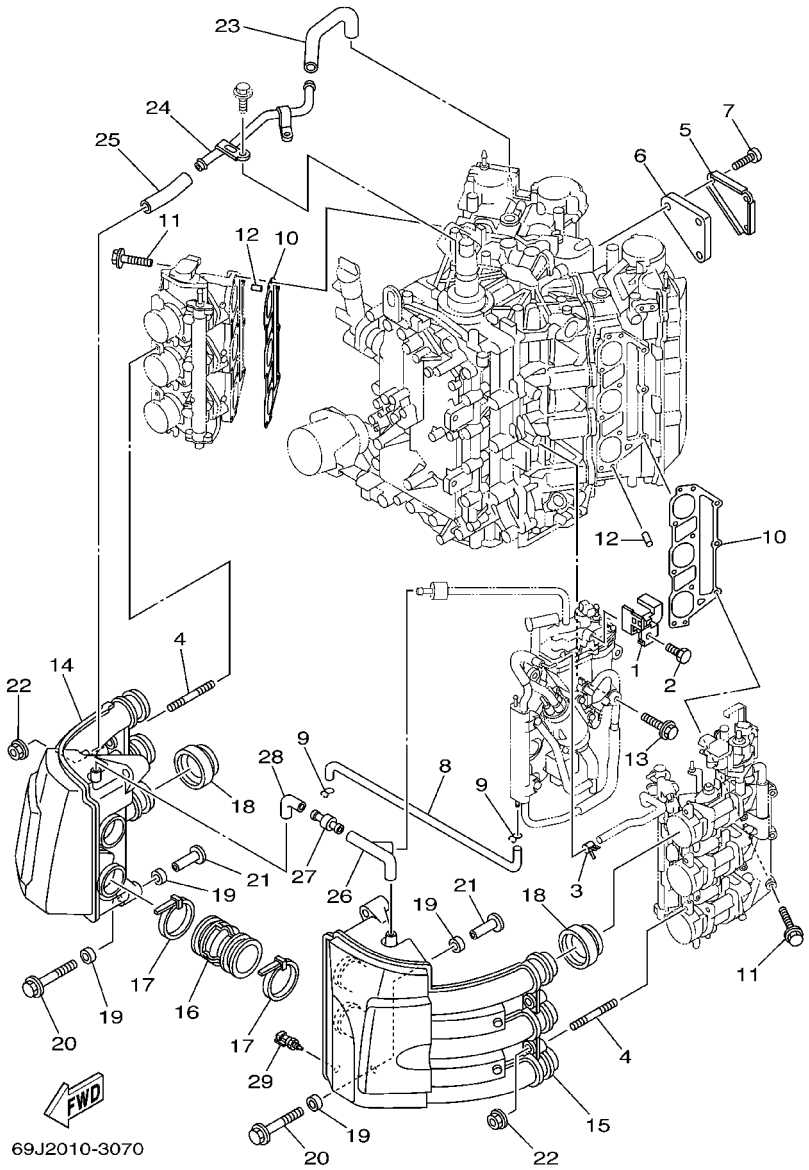

FIG. 7 INTAKE

REF. NO.	PART NO.	DESCRIPTION	69J2	60L2	69K2	60M2		REMARKS
28	69J–14348–00	PIPE 1	1	1	1	1		
29	65L–85886–00	THERMOSENSOR	1	1	1	1		

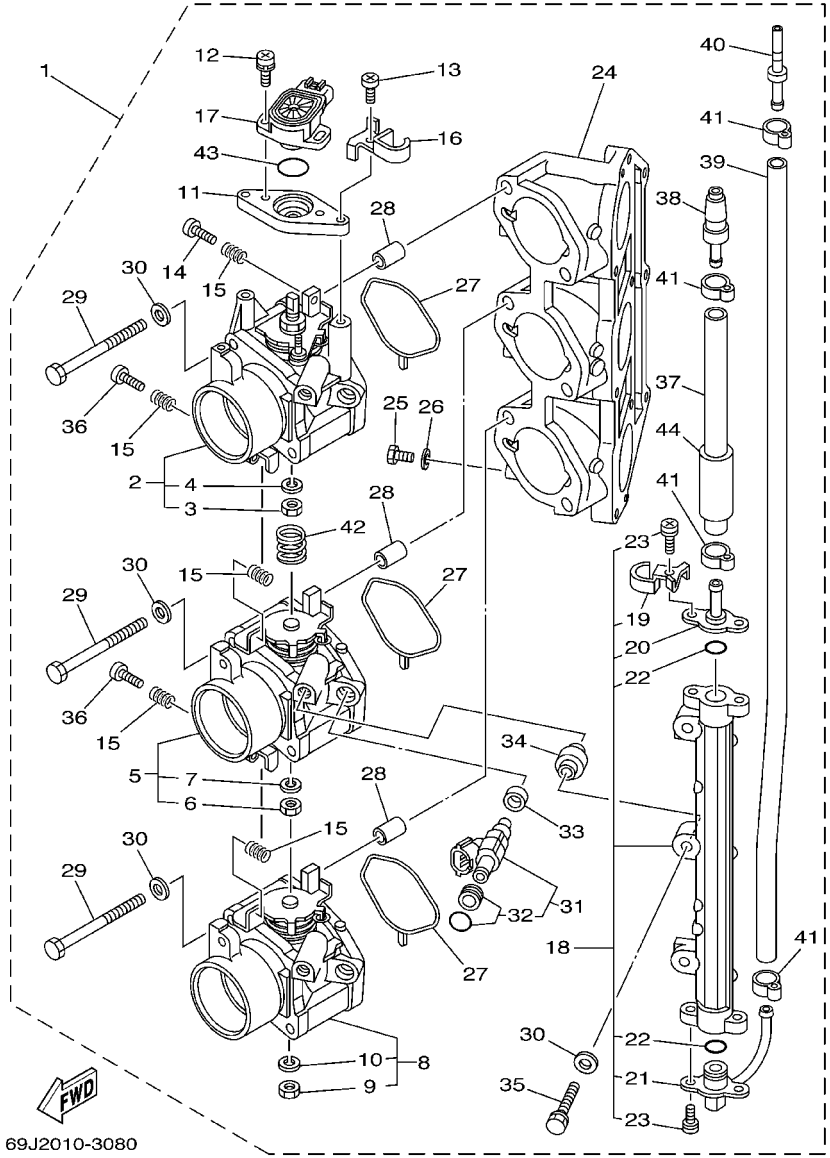

FIG. 8 THROTTLE BODY ASSY 1

REF. NO.	PART NO.	DESCRIPTION	69J2	60L2	69K2	60M2		REMARKS
1	69J–13750–00	THROTTLE BODY ASSY	1		1			
	60L–13750–00	THROTTLE BODY ASSY		1		1		
2	69J–13751–00	.BODY, THROTTLE 1	1		1			
	60L–13751–00	.BODY, THROTTLE 1		1		1		
3	3CF–14594–00	..NUT	1	1	1	1		
4	92990–08100	..WASHER, SPRING	1	1	1	1		
5	69J–13753–00	.BODY, THROTTLE 3	1		1			
	60L–13753–00	.BODY, THROTTLE 3		1		1		
6	3CF–14594–00	..NUT	1	1	1	1		
7	92990–08100	..WASHER, SPRING	1	1	1	1		
8	69J–13755–00	.BODY, THROTTLE 5	1		1			
	60L–13755–00	.BODY, THROTTLE 5		1		1		
9	3CF–14594–00	..NUT	1	1	1	1		
10	92990–08100	..WASHER, SPRING	1	1	1	1		
11	69J–13576–00	.SPACER	1	1	1	1		
12	68V–81145–01	.SCREW 1	2	2	2	2		
13	68V–14565–00	.SCREW	2	2	2	2		
14	68V–14323–00	.SCREW, AIR ADJUSTING	1	1	1	1		
15	68V–14331–00	.SPRING, THROTTLE VALVE	5	5	5	5		
16	69J–14261–00	.HOLDER	1	1	1	1		
17	69J–85885–00	.THROTTLE SENSOR ASSY	1	1	1	1		
18	69J–13160–00	.DELIVERY PIPE ASSY 1	1	1	1	1		
19	69J–14261–00	..HOLDER	1	1	1	1		
20	69J–14295–00	..PIPE, FUEL	1	1	1	1		
21	69J–14251–00	..NIPPLE	1	1	1	1		
22	68V–14397–00	..O–RING	2	2	2	2		
23	68V–81147–00	..SCREW 3	4	4	4	4		

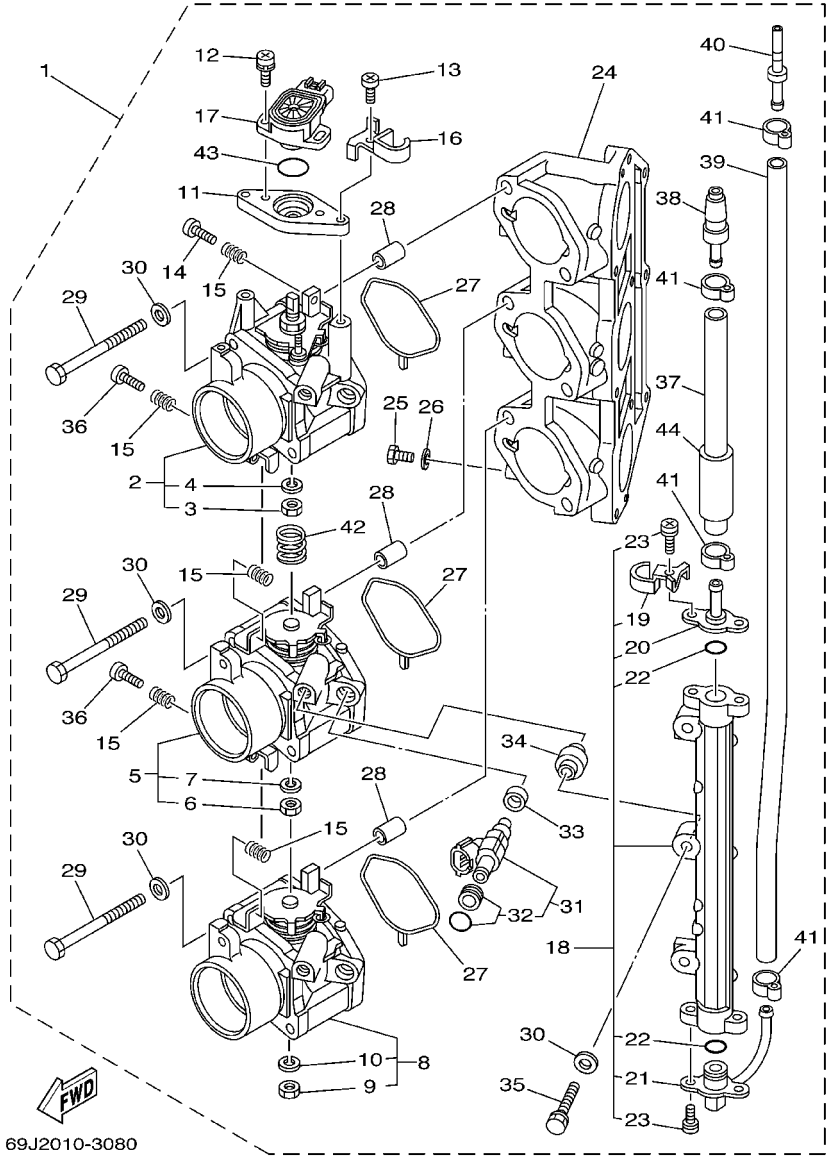

FIG. 8 THROTTLE BODY ASSY 1

REF. NO.	PART NO.	DESCRIPTION	69J2	60L2	69K2	60M2		REMARKS
24	69J–13641–00	.MANIFOLD 1	1	1	1	1		
25	97095–06010	.BOLT	3	3	3	3		
26	90430–06014	.GASKET	3	3	3	3		
27	69J–13557–00	.GASKET	3	3	3	3		
28	99530–10114	.PIN, DOWEL	6	6	6	6		
29	69J–14496–00	.BOLT	6	6	6	6		
30	68V–14475–00	.WASHER	9	9	9	9		
31	69J–13761–00	.INJECTOR ASSY	3	3	3	3		
32	68V–1410B–00	..PACKING KIT	1	1	1	1		
33	68V–13766–00	.RUBBER, INJECTOR	3	3	3	3		
34	68V–14264–00	.COLLAR	3	3	3	3		
35	68V–14428–00	.BOLT	3	3	3	3		
36	69J–14321–00	.SCREW, THROTTLE	2	2	2	2		
37	69J–13973–00	.PIPE, FUEL 3	1	1	1	1		
38	68F–24300–00	.FUEL PIPE JOINT	1	1	1	1		
39	69J–13972–00	.PIPE, FUEL 2	1	1	1	1		
40	69J–24381–00	.SET BAR, FUEL JOINT	1	1	1	1		
41	68V–24387–00	.CLIP	4	4	4	4		
42	69J–14286–00	.SPRING	1		1			
	60L–14286–00	.SPRING		1		1		
43	68V–8182L–00	.O–RING 1	1	1	1	1		
44	69J–14149–00	.PIPE	1	1	1	1		

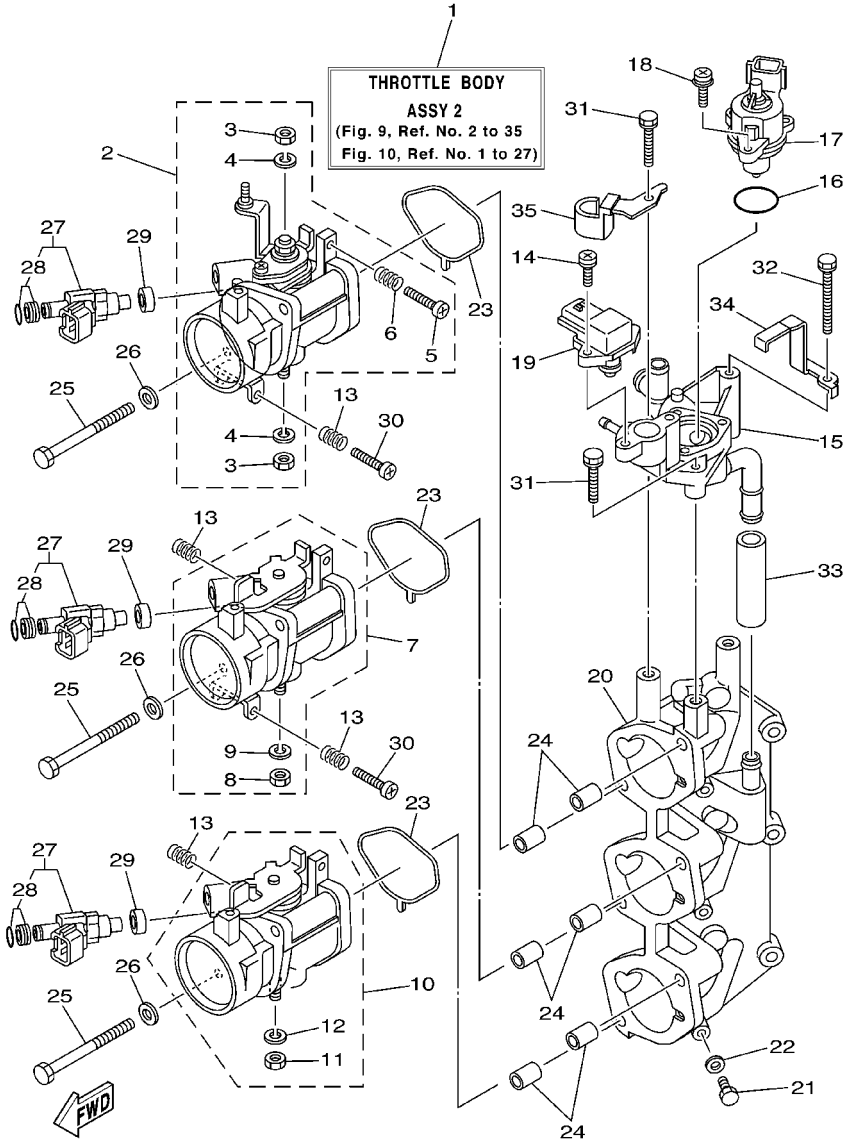

FIG. 9 THROTTLE BODY ASSY 2

REF. NO.	PART NO.	DESCRIPTION	69J2	60L2	69K2	60M2		REMARKS
1	69J–1375A–00	THROTTLE BODY ASSY 2	1		1			
	60L–1375A–00	THROTTLE BODY ASSY 2		1		1		
2	69J–13752–00	BODY, THROTTLE 2	1		1			
	60L–13752–00	BODY, THROTTLE 2		1		1		
3	3CF–14594–00	.NUT	2	2	2	2		
4	92990–08100	.WASHER, SPRING	2	2	2	2		
5	68V–14323–00	.SCREW, AIR ADJUSTING	1	1	1	1		
6	68V–14331–00	.SPRING, THROTTLE VALVE	1	1	1	1		
7	69J–13754–00	BODY, THROTTLE 4	1		1			
	60L–13754–00	BODY, THROTTLE 4		1		1		
8	3CF–14594–00	.NUT	1	1	1	1		
9	92990–08100	.WASHER, SPRING	1	1	1	1		
10	69J–13756–00	BODY, THROTTLE 6	1		1			
	60L–13756–00	BODY, THROTTLE 6		1		1		
11	3CF–14594–00	.NUT	1	1	1	1		
12	92990–08100	.WASHER, SPRING	1	1	1	1		
13	68V–14331–00	SPRING, THROTTLE VALVE	4	4	4	4		
14	68V–81147–00	SCREW 3	2	2	2	2		
15	69J–14960–00	BODY ASSY	1	1	1	1		
16	68V–13473–00	O–RING	1	1	1	1		
17	68V–1312A–00	VALVE, CONTROL	1	1	1	1		
18	68V–81146–01	SCREW 2	3	3	3	3		
19	68V–82380–00	SENSOR, PRESSURE	1	1	1	1		
20	69J–13642–00	MANIFOLD 2	1	1	1	1		
21	97095–06010	BOLT	3	3	3	3		
22	90430–06014	GASKET	3	3	3	3		
23	69J–13557–00	GASKET	3	3	3	3		

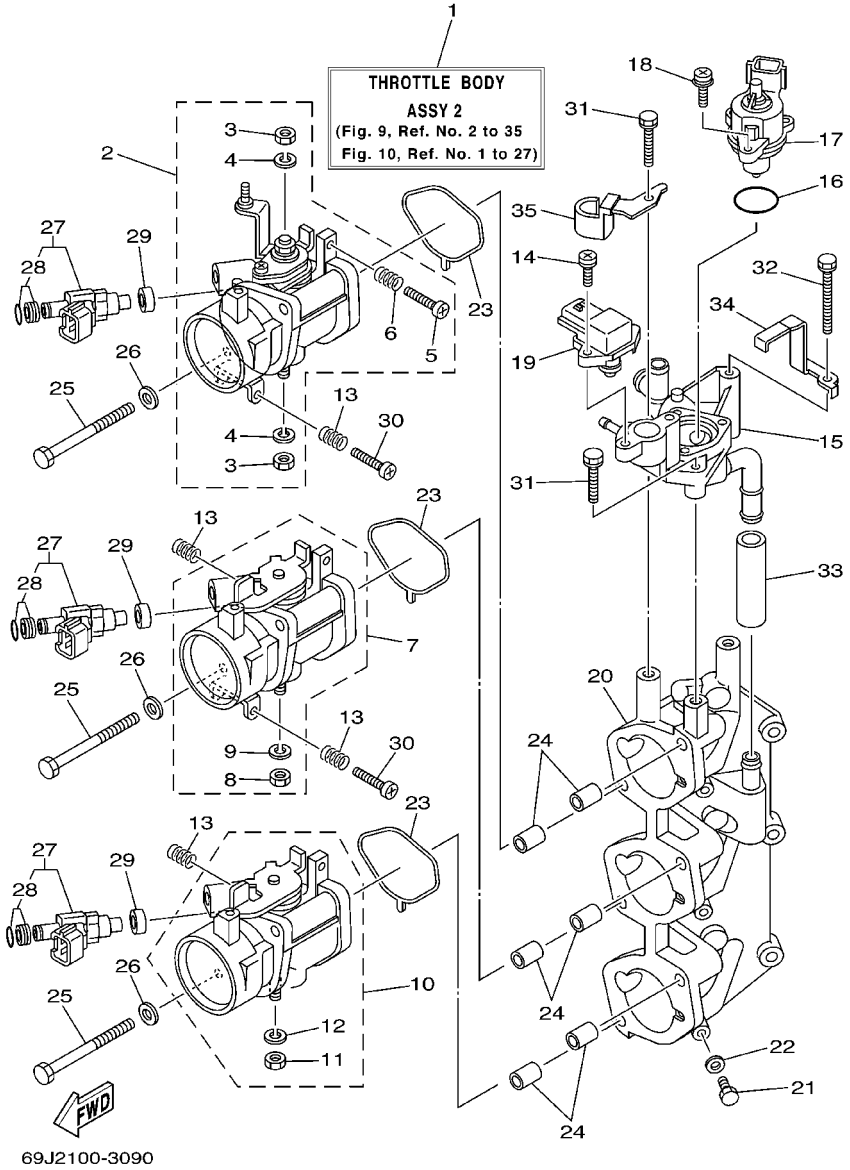

FIG. 9 THROTTLE BODY ASSY 2

REF. NO.	PART NO.	DESCRIPTION	69J2	60L2	69K2	60M2		REMARKS
24	99530–10114	PIN, DOWEL	6	6	6	6		
25	69J–14496–00	BOLT	6	6	6	6		
26	68V–14475–00	WASHER	6	6	6	6		
27	69J–13761–00	INJECTOR ASSY	3	3	3	3		
28	68V–1410B–00	..PACKING KIT	1	1	1	1		
29	68V–13766–00	RUBBER, INJECTOR	3	3	3	3		
30	69J–14321–00	SCREW, THROTTLE	2	2	2	2		
31	69J–13573–00	BOLT 1	2	2	2	2		
32	69J–13574–00	BOLT 2	1	1	1	1		
33	69J–13547–00	HOSE 3	1	1	1	1		
34	69J–14159–00	CLIP	1	1	1	1		
35	69J–14255–00	PLATE	1	1	1	1		

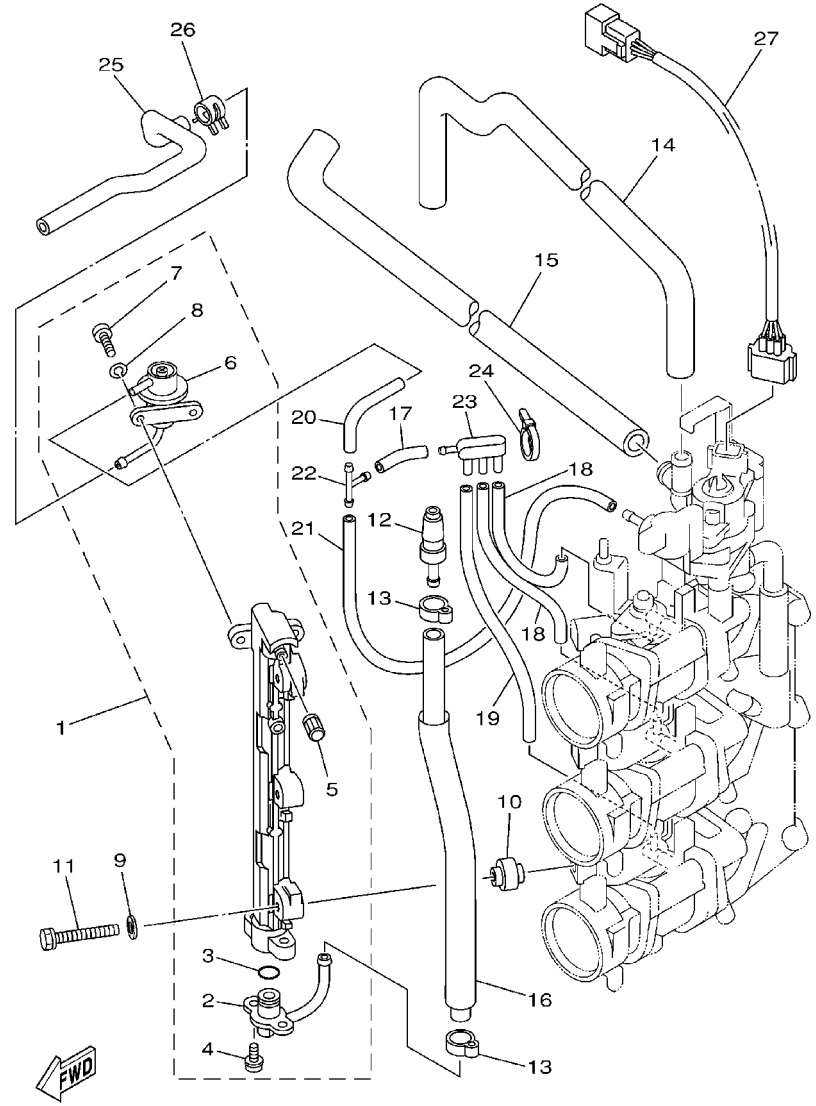

FIG. 10 THROTTLE BODY ASSY 3

REF. NO.	PART NO.	DESCRIPTION	69J2	60L2	69K2	60M2		REMARKS
1	69J–13170–00	DELIVERY PIPE ASSY 2	1	1	1	1		
2	69J–13435–00	.NIPPLE	1	1	1	1		
3	68V–14397–00	.O–RING	1	1	1	1		
4	68V–81147–00	.SCREW 3	2	2	2	2		
5	68V–14225–00	.CAP	1	1	1	1		
6	69J–13906–00	.REGULATOR, PRESSURE	1	1	1	1		
7	68V–14565–00	.SCREW	2	2	2	2		
8	68V–14356–00	.WASHER, SPRING	2	2	2	2		
9	68V–14475–00	WASHER	3	3	3	3		
10	68V–14264–00	COLLAR	3	3	3	3		
11	68V–14428–00	BOLT	3	3	3	3		
12	68F–24300–00	FUEL PIPE JOINT	1	1	1	1		
13	68V–24387–00	CLIP	2	2	2	2		
14	69J–13546–00	HOSE 2	1	1	1	1		
15	69J–13545–00	HOSE 1	1	1	1	1		
16	69J–13974–00	PIPE, FUEL 4	1	1	1	1		
17	68V–13544–00	HOSE, VACUUM SENSING 2	1	1	1	1		
18	5JW–14349–00	PIPE	2	2	2	2		
19	69J–13542–00	HOSE, VACUUM SENSING 1	1	1	1	1		
20	69J–13532–00	HOSE, VACUUM SENSING 3	1	1	1	1		
21	69J–13533–00	HOSE, VACUUM SENSING 4	1	1	1	1		
22	68V–24377–00	PIPE, JOINT 3	1	1	1	1		
23	69J–13595–00	JOINT	1	1	1	1		
24	69J–14139–00	CLIP, PIPE	1	1	1	1		
25	69J–13975–00	PIPE, FUEL 5	1	1	1	1		
26	68V–24519–00	CLIP	1	1	1	1		
27	69J–8259L–00	WIRE HARNESS ASSY 1	1	1	1	1		

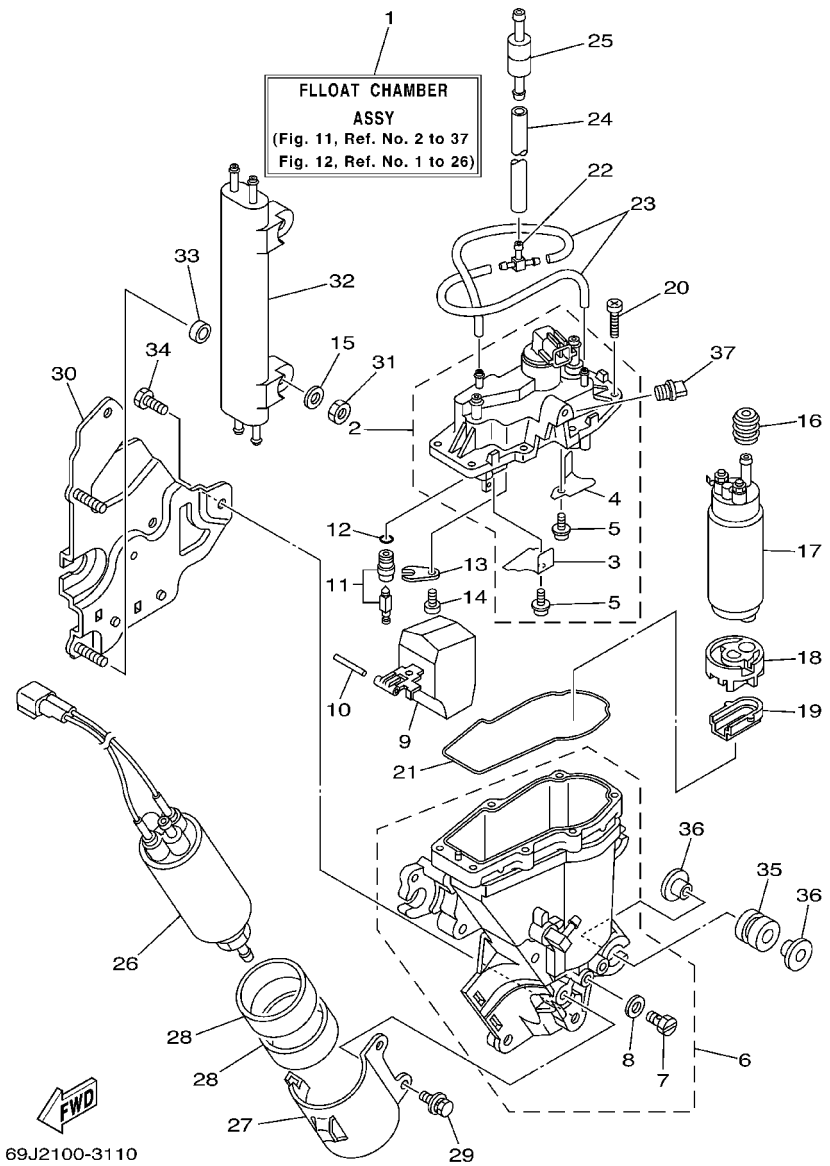

FIG. 11 FUEL INJECTION PUMP 1

REF. NO.	PART NO.	DESCRIPTION	69J2	60L2	69K2	60M2		REMARKS
1	69J–14180–10	FLOAT CHAMBER ASSY	1	1	1	1		
2	69J–14182–00	COVER, FLOAT CHAMBER	1	1	1	1		
3	69J–2411R–00	.PLATE 1	1	1	1	1		
4	69J–2411T–00	.PLATE 2	1	1	1	1		
5	4SV–24453–00	.SCREW	2	2	2	2		
6	69J–14181–00	BODY, FLOAT CHAMBER 1	1	1	1	1		
7	266–14191–00	.PLUG, DRAIN	1	1	1	1		
8	59V–14962–00	.WASHER	1	1	1	1		
9	69J–14985–00	FLOAT	1	1	1	1		
10	68V–14386–00	PIN, FLOAT	1	1	1	1		
11	69J–14546–00	VALVE, NEEDLE	1	1	1	1		
12	68V–13769–00	O–RING	1	1	1	1		
13	68V–14255–00	PLATE	1	1	1	1		
14	98507–04008	SCREW	1	1	1	1		
15	68V–14357–00	WASHER, PLAIN	2	2	2	2		
16	68V–13781–00	DAMPER, PUMP	1	1	1	1		
17	69J–13907–00	FUEL PUMP COMP.	1	1	1	1		
18	68V–13915–00	FILTER	1	1	1	1		
19	68V–13784–00	COVER, PUMP	1	1	1	1		
20	68V–14567–00	SCREW	7	7	7	7		
21	68V–14984–00	GASKET, FLOAT CHAMBER	1	1	1	1		
22	69J–24379–00	PIPE, JOINT 4	1	1	1	1		
23	69J–14148–00	PIPE	2	2	2	2		
24	69J–14197–00	PIPE	1	1	1	1		
25	69J–14989–00	ORIFICE, AIR VENT	1	1	1	1		
26	69J–24410–00	FUEL PUMP ASSY	1	1	1	1		
27	69J–24491–00	BRACKET, FUEL PUMP	1	1	1	1		

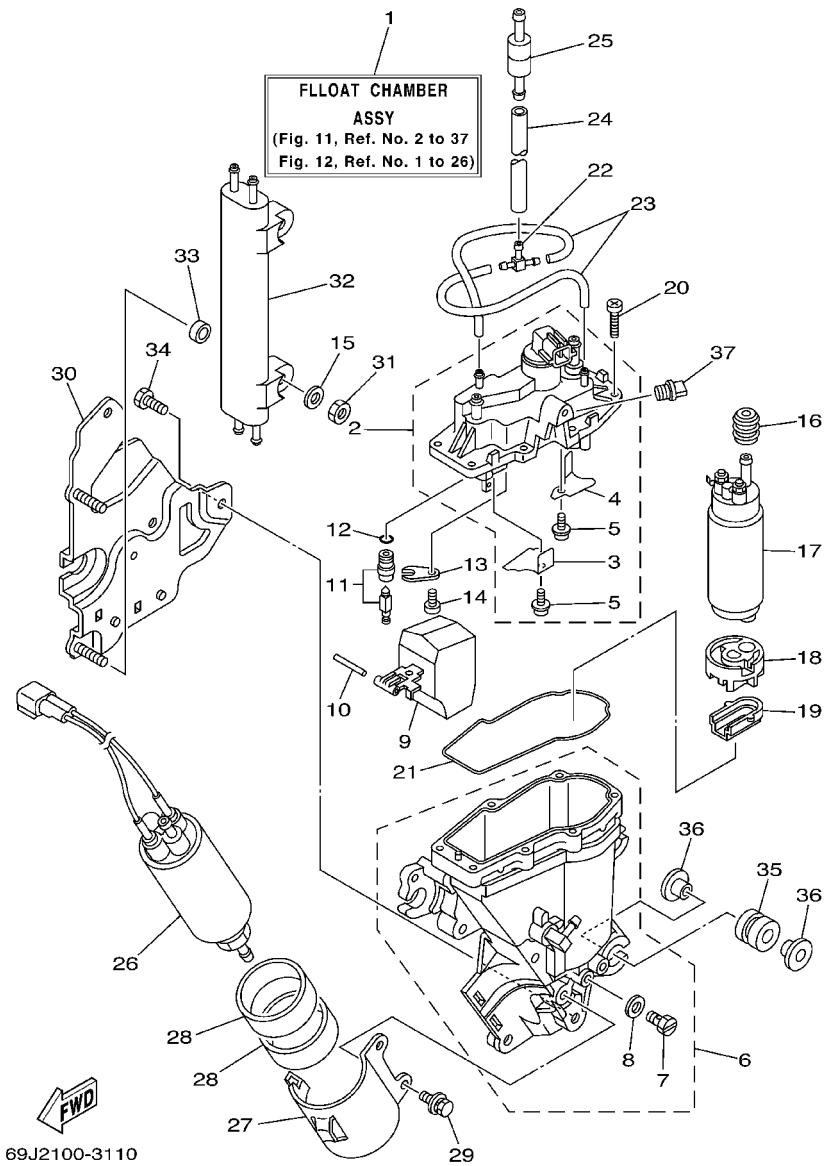

FIG. 11 FUEL INJECTION PUMP 1

REF. NO.	PART NO.	DESCRIPTION	69J2	60L2	69K2	60M2		REMARKS
28	69J–24492–00	BUSH, FULEL PUMP	2	2	2	2		
29	69J–24592–00	BOLT	2	2	2	2		
30	69J–24422–10	PLATE	1	1	1	1		
31	69J–14164–00	NUT, HOLDING	2	2	2	2		
32	69J–21841–00	COOLER	1	1	1	1		
33	68V–14265–00	COLLAR	2	2	2	2		
34	69J–14446–00	BOLT	3	3	3	3		
35	69J–13593–00	DAMPER	4	4	4	4		
36	69J–13716–00	COLLAR	8	8	8	8		
37	69J–14225–00	CAP	1	1	1	1		

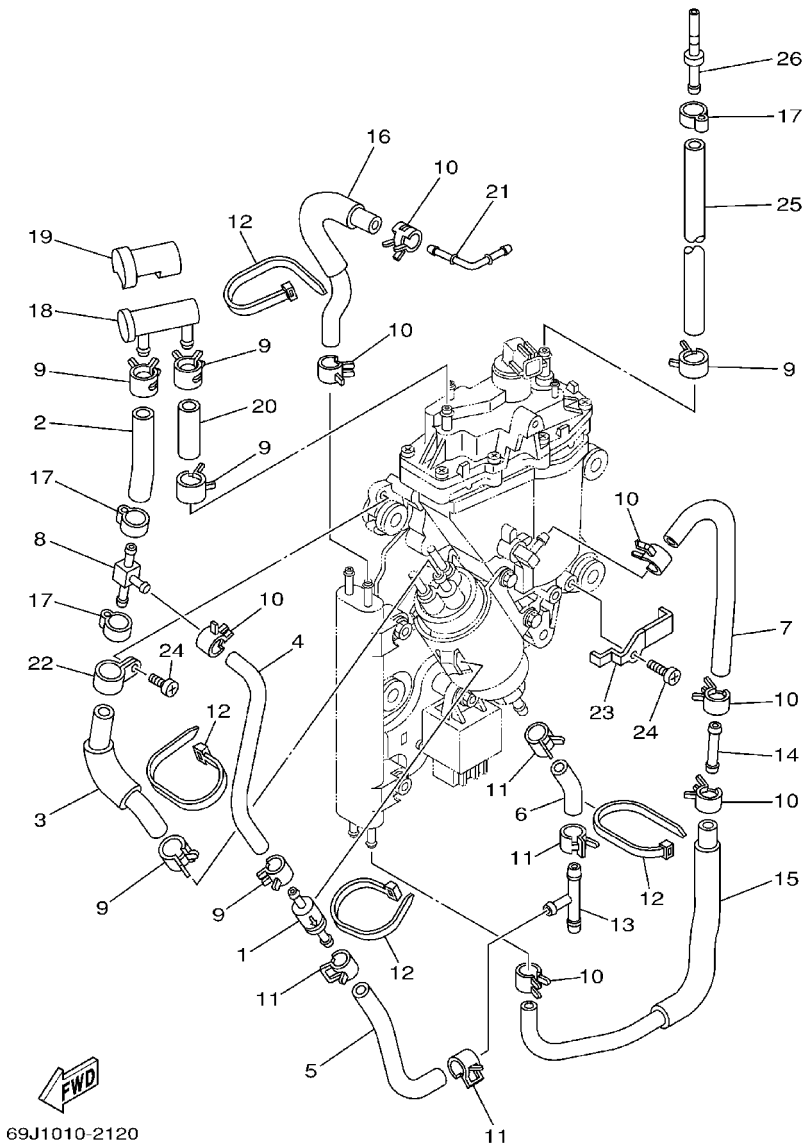

FIG. 12 FUEL INJECTION PUMP 2

REF. NO.	PART NO.	DESCRIPTION	69J2	60L2	69K2	60M2		REMARKS
1	69J-24460-00	RELIEF VALVE ASSY	1	1	1	1		
2	69J-24324-00	PIPE 13	1	1	1	1		
3	69J-24321-00	PIPE 10	1	1	1	1		
4	69J-24322-00	PIPE 11	1	1	1	1		
5	69J-24323-00	PIPE 12	1	1	1	1		
6	69J-24317-00	PIPE 7	1	1	1	1		
7	69J-24316-00	PIPE 6	1	1	1	1		
8	69J-24537-00	NIPPLE	1	1	1	1		
9	68V-13577-00	CLIP	6	6	6	6		
10	68V-24519-00	CLIP	7	7	7	7		
11	69J-14137-00	CLIP	4	4	4	4		
12	68V-2481H-00	CLAMP	4	4	4	4		
13	6E5-24378-00	PIPE, JOINT 3	1	1	1	1		
14	69J-24461-00	PIPE, JOINT	1	1	1	1		
15	69J-24315-00	PIPE 5	1	1	1	1		
16	69J-13976-00	PIPE, FUEL 6	1	1	1	1		
17	68V-24387-00	CLIP	3	3	3	3		
18	69J-24501-00	FILTER, FUEL	1	1	1	1		
19	69J-24599-00	CAP	1	1	1	1		
20	69J-24325-00	PIPE 14	1	1	1	1		
21	69J-1410F-00	NIPPLE 1	1	1	1	1		
22	69J-24366-00	CLAMP, FUEL PIPE 1	1	1	1	1		
23	69J-24367-00	CLAMP, FUEL PIPE 2	1	1	1	1		
24	98582-05008	ELECTRONIC SIREN ASS'Y	2	2	2	2		
25	69J-13974-00	PIPE, FUEL 4	1	1	1	1		
26	69J-24381-00	SET BAR, FUEL JOINT	1	1	1	1		

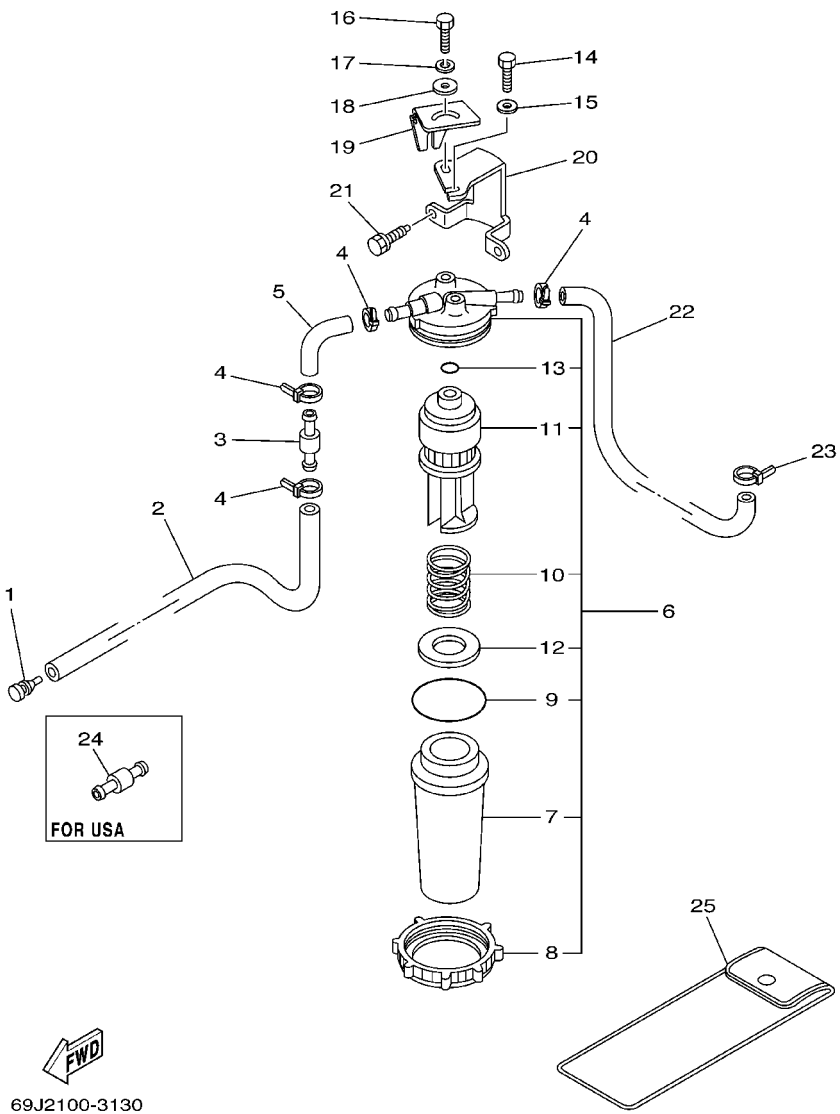

FIG. 13 FUEL 1

REF. NO.	PART NO.	DESCRIPTION	69J2	60L2	69K2	60M2		REMARKS
1	689–85547–00	DAMPER	1	1	1	1		
2	90445–13004	HOSE	1	1	1	1		
3	6R3–24377–00	PIPE, JOINT 3	1	1	1	1		
4	90465–11M10	CLAMP	4	4	4	4		
5	61A–24311–00	PIPE, FUEL 1	1	1	1	1		
6	65L–24560–00	FILTER ASSY	1	1	1	1		
7	61A–24521–00	.CUP, FILTER	1	1	1	1		
8	65L–24531–01	.NUT	1	1	1	1		
9	61A–24564–00	.O–RING	1	1	1	1		
10	65L–24577–00	.SPRING	1	1	1	1		
11	65L–24563–00	.ELEMENT, FILTER	1	1	1	1		
12	61A–24469–00	.FLOAT, WATER LEVEL	1	1	1	1		
13	65L–24564–00	.O–RING	1	1	1	1		
14	97095–06014	BOLT	1	1	1	1		
15	92995–06600	WASHER	1	1	1	1		
16	97095–06016	BOLT	1	1	1	1		
17	92995–06100	WASHER, SPRING	1	1	1	1		
18	90201–06068	WASHER, PLATE	1	1	1	1		
19	65L–24558–00	HOLDER, FILTER	1	1	1	1		
20	69J–24566–00	BRACKET, FILTER	1	1	1	1		
21	90119–06037	BOLT, WITH WASHER	2	2	2	2		
22	69J–24313–00	PIPE 3	1	1	1	1		
23	90465–11M10	CLAMP	1	1	1	1		
24	6R3–24377–10	PIPE, JOINT 3	1	1	1	1		FOR USA
25	69J–28100–00	TOOL KIT	1	1	1	1		AP FOR CARIB

FIG. 14 FUEL 2

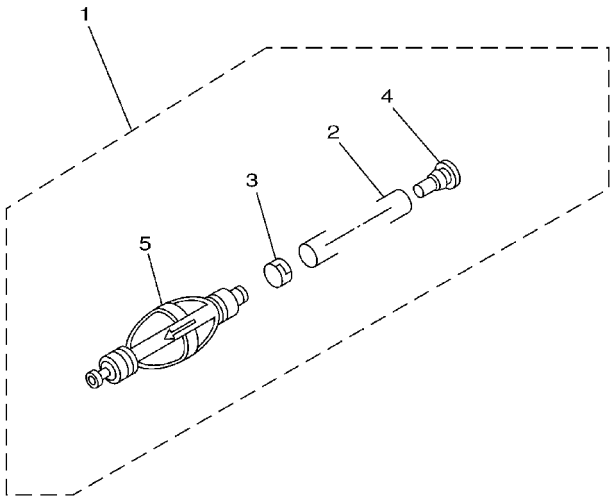

67F0100-1100

REF. NO.	PART NO.	DESCRIPTION	69J2	60L2	69K2	60M2		REMARKS
1	6Y2–24307–41	FUEL PIPE COMP. 2	1	1	1	1		AP
	6Y2–24307–50	FUEL PIPE COMP. 2	1	1	1	1		AP FOR USA
2	90445–13M01	.HOSE (L:2050)	1	1	1	1		
3	6E5–24351–51	.BAND 1	1	1	1	1		
4	90480–06M19	.GROMMET	1	1	1	1		
5	6Y2–24360–52	.PRIMER PUMP ASSY	1	1	1	1		FOR 6Y2–24307–41
	6Y2–24360–60	.PRIMER PUMP ASSY	1	1	1	1		FOR 6Y2–24307–50

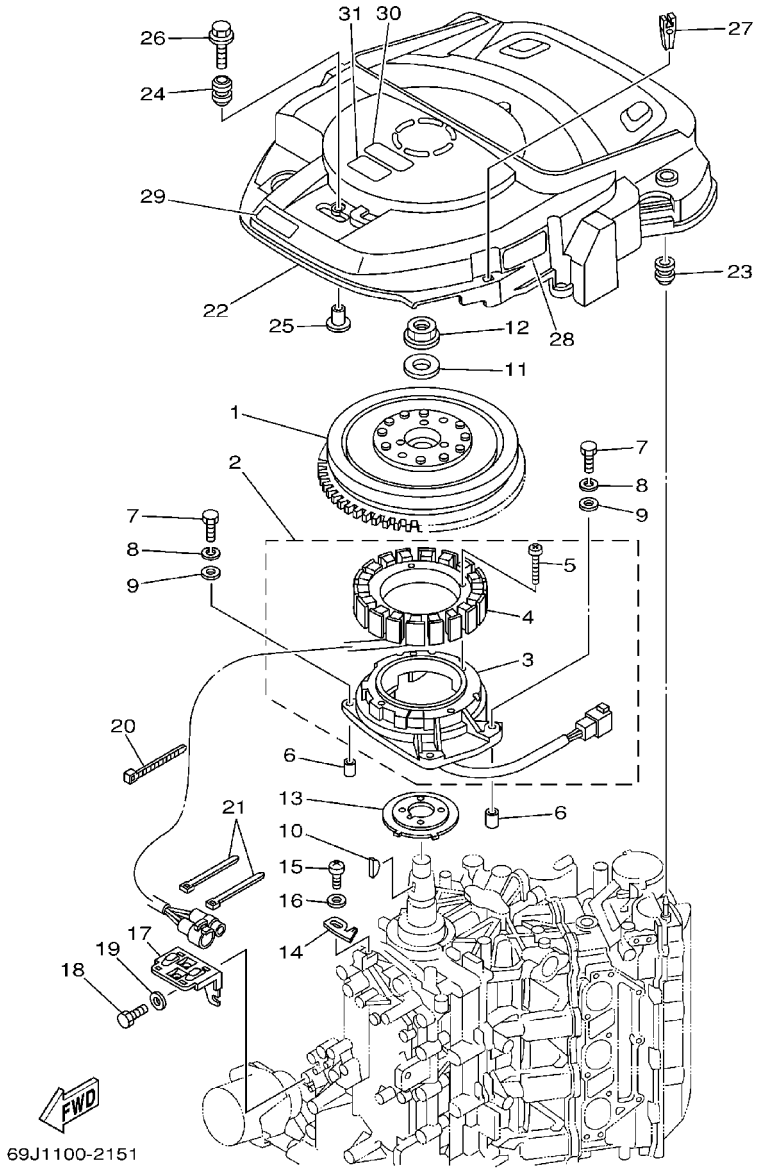

FIG. 15 GENERATOR

REF. NO.	PART NO.	DESCRIPTION	69J2	60L2	69K2	60M2		REMARKS
1	69J–81450–10	ROTOR ASSY	1	1	1	1		
2	69J–81460–01	BASE ASSY	1	1	1	1		
3	69J–85580–00	.COIL, PULSER	1	1	1	1		
4	69J–81410–01	.STATOR ASSY	1	1	1	1		
5	63D–81345–20	.SCREW, WITH WASHER (M6X30)	4	4	4	4		
6	99530–08012	PIN, DOWEL	2	2	2	2		
7	97095–06035	BOLT	4	4	4	4		
8	92995–06100	WASHER, SPRING	4	4	4	4		
9	92995–06600	WASHER	4	4	4	4		
10	90280–05015	KEY, WOODRUFF	1	1	1	1		
11	90201–24014	WASHER, PLATE	1	1	1	1		
12	90179–24002	NUT	1	1	1	1		
13	69J–81673–00	ROTOR	1	1	1	1		
14	67F–81332–00	PLATE, TIMING	1	1	1	1		
15	97885–06010	SCREW, PAN HEAD	1	1	1	1		
16	92995–06600	WASHER	1	1	1	1		
17	69J–8132G–00	PLATE	1	1	1	1		
18	97095–06016	BOLT	1	1	1	1		
19	92995–06600	WASHER	1	1	1	1		
20	90465–13M18	CLAMP	1	1	1	1		
21	90465–14M66	CLAMP	2	2	2	2		
22	69J–81337–00	COVER, FLYWHEEL	1	1	1	1		
23	663–82317–01	DAMPER, IGNITION COIL	2	2	2	2		
24	6A0–82317–00	DAMPER, IGNITION COIL	3	3	3	3		
25	624–42542–00	PIPE	3	3	3	3		
26	90119–06M59	BOLT, WITH WASHER	3	3	3	3		
27	67F–2812A–00	PULLER, FUSE	1	1	1	1		

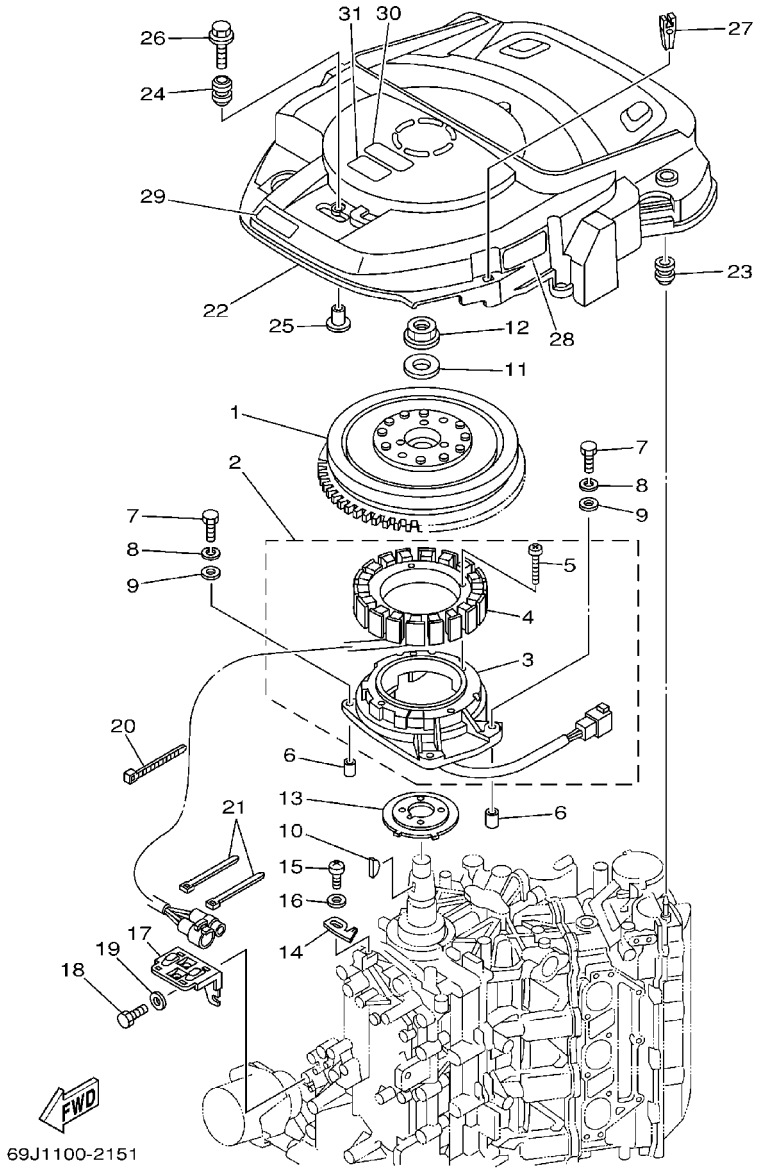

FIG. 15 GENERATOR

REF. NO.	PART NO.	DESCRIPTION	69J2	60L2	69K2	60M2		REMARKS
28	69J–81919–20	GRAPHIC, REGULATOR	1	1	1	1		
29	69J–13437–41	MARK, CAUTION	1	1	1	1		FOR USA,OCEANIA
	69J–13437–51	MARK, CAUTION	1	1	1	1		FOR CANADA
	69J–13437–61	MARK, CAUTION	1	1	1	1		FOR CARIB
30	6A1–83625–41	MARK 5	1	1	1	1		
31	6A1–83625–51	MARK 5	1	1	1	1		FOR CANADA,CARIB

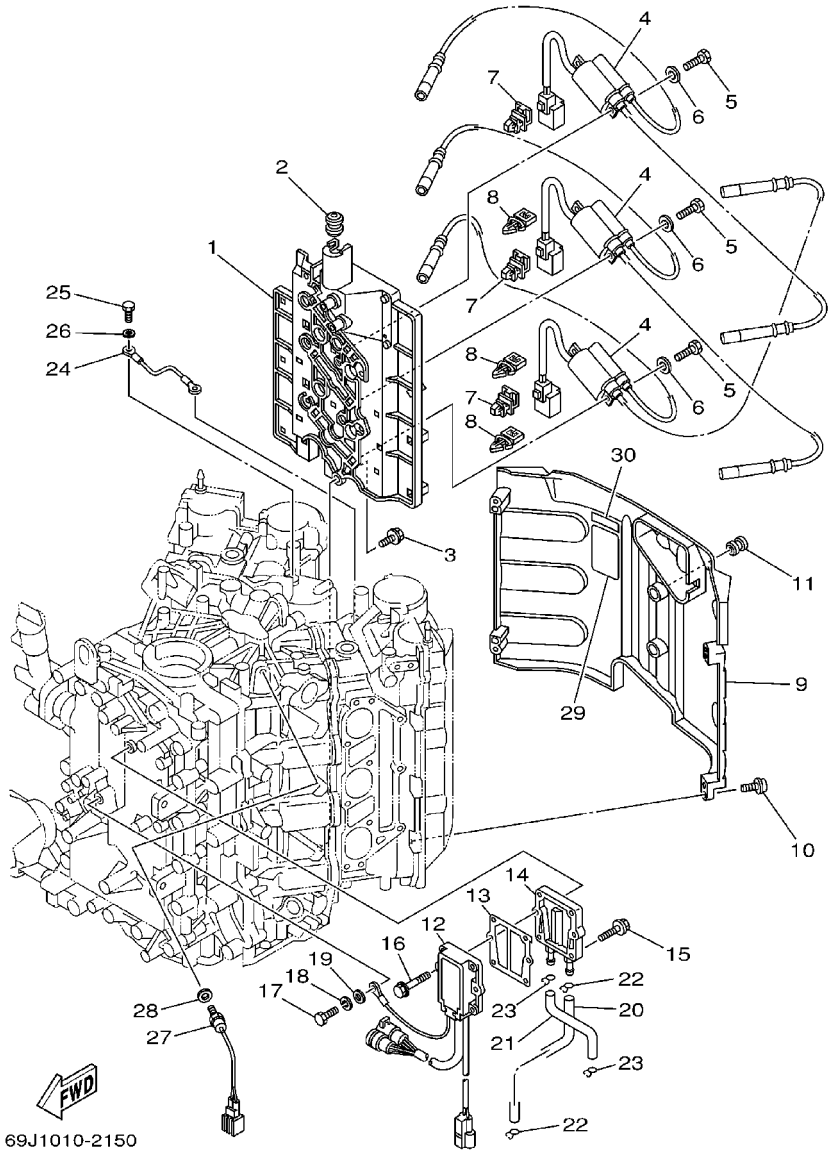

FIG. 16 ELECTRICAL 1

REF. NO.	PART NO.	DESCRIPTION	69J2	60L2	69K2	60M2		REMARKS
1	69J–82316–00	BRACKET, IGNITION COIL	1	1	1	1		
2	90480–09M21	GROMMET	1	1	1	1		
3	90119–06041	BOLT, WITH WASHER	6	6	6	6		
4	69J–82310–00	IGNITION COIL ASSY	3	3	3	3		
5	97095–06020	BOLT	6	6	6	6		
6	92995–06600	WASHER	6	6	6	6		
7	90464–12002	CLAMP	3	3	3	3		
8	90464–07M56	CLAMP	3	3	3	3		
9	69J–82314–00	COVER, IGNITION COIL	1	1	1	1		
10	90110–06038	BOLT, HEXAGON SOCKET HEAD	4	4	4	4		
11	663–82317–01	DAMPER, IGNITION COIL	2	2	2	2		
12	69J–81960–10	RECTIFIER & REGULATOR ASSY	1	1	1	1		
13	69J–81975–A0	PLATE, RECTIFIER FITTING	1	1	1	1		
14	69J–81972–01–1S	COVER, RECTIFIER	1	1	1	1		
15	90119–06MA3	BOLT, WITH WASHER	4	4	4	4		
16	90119–06MA5	BOLT, WITH WASHER	2	2	2	2		
17	97095–06020	BOLT	1	1	1	1		
18	92995–06100	WASHER, SPRING	1	1	1	1		
19	92995–06600	WASHER	1	1	1	1		
20	69J–12482–00	PIPE 2	1	1	1	1		
21	69J–12481–00	PIPE 1	1	1	1	1		
22	90467–09M03	CLIP	2	2	2	2		
23	90467–08M18	CLIP	2	2	2	2		
24	69J–82519–00	WIRE, EARTH LEAD	1	1	1	1		
25	97095–06012	BOLT	2	2	2	2		
26	92995–06600	WASHER	2	2	2	2		
27	61A–85790–00	THERMOSENSOR ASSY	1	1	1	1		

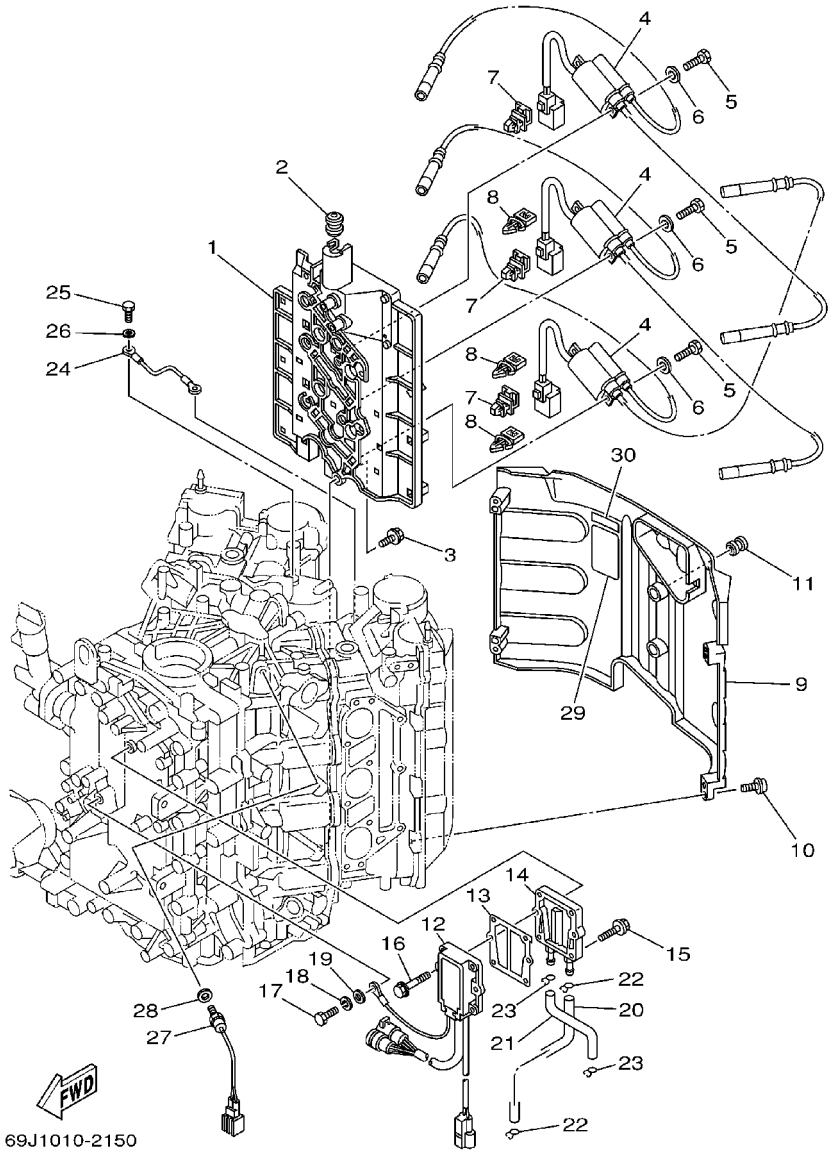

FIG. 16 ELECTRICAL 1

REF. NO.	PART NO.	DESCRIPTION	69J2	60L2	69K2	60M2		REMARKS
28	92990-10600	WASHER, PLATE	1	1	1	1		
29	69J-83626-00	MARK 6	1	1	1	1		
30	67F-12138-40	MARK, CAUTION	1	1	1	1		FOR USA,OCEANIA
	67F-12138-50	MARK, CAUTION	1	1	1	1		FOR CANADA
	67F-12138-60	MARK, CAUTION	1	1	1	1		FOR CARIB

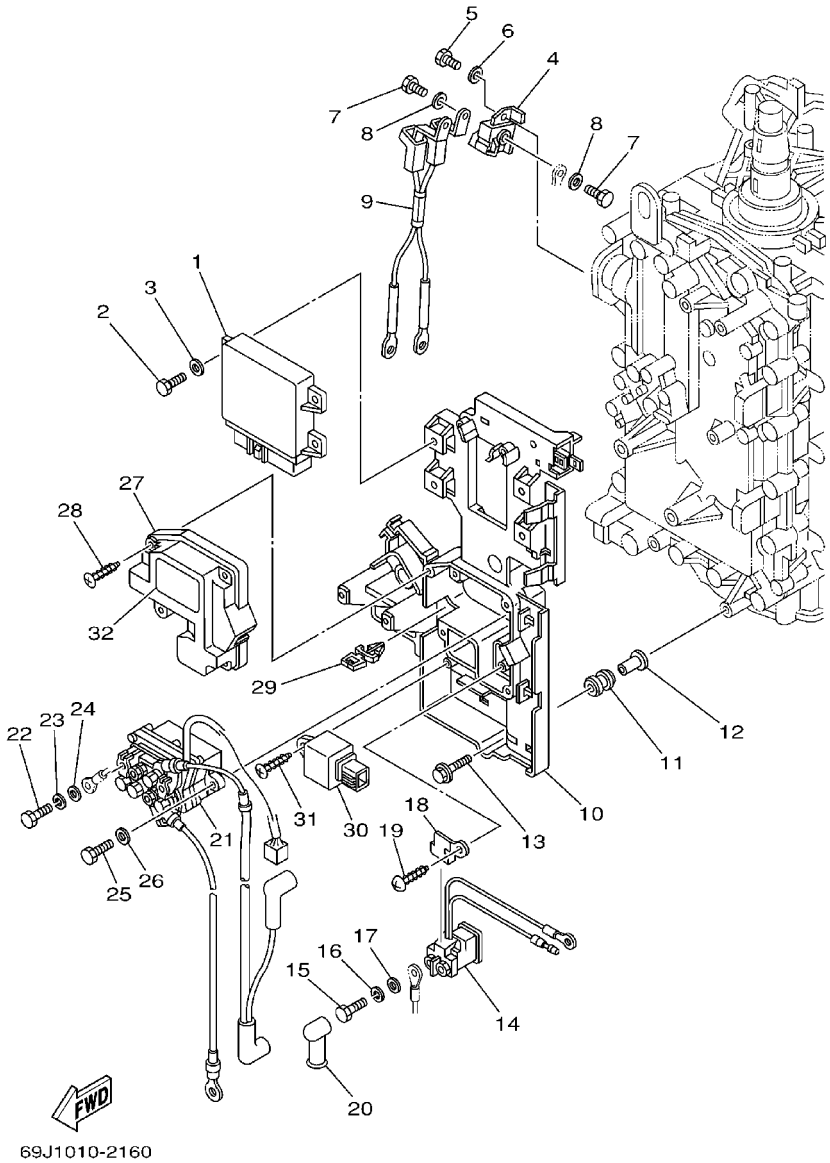

FIG. 17 ELECTRICAL 2

REF. NO.	PART NO.	DESCRIPTION	69J2	60L2	69K2	60M2		REMARKS
1	69J–8591A–02	ENGINE CONTROL UNIT ASSY	1		1			
	60L–8591A–01	ENGINE CONTROL UNIT ASSY		1		1		
2	97095–06016	BOLT	4	4	4	4		
3	92995–06600	WASHER	4	4	4	4		
4	69J–81925–00	TERMINAL	1	1	1	1		
5	97095–08020	BOLT	2	2	2	2		
6	92995–08600	WASHER	2	2	2	2		
7	97095–06014	BOLT	2	2	2	2		
8	92995–06600	WASHER	2	2	2	2		
9	69J–82105–00	WIRE HARNESS	1	1	1	1		
10	69J–81948–00	BRACKET	1	1	1	1		
11	6A0–82317–00	DAMPER, IGNITION COIL	6	6	6	6		
12	624–42542–00	PIPE	6	6	6	6		
13	90119–06M59	BOLT, WITH WASHER	6	6	6	6		
14	68V–8194A–00	RELAY	1	1	1	1		
15	97095–06010	BOLT	2	2	2	2		
16	92995–06100	WASHER, SPRING	2	2	2	2		
17	92995–06600	WASHER	2	2	2	2		
18	68V–81953–00	STAY, RELAY	1	1	1	1		
19	97780–60620	SCREW, TAPPING	1	1	1	1		
20	6G5–82119–00	COVER, LEAD WIRE	1	1	1	1		
21	69J–81950–10	RELAY ASSY	1	1	1	1		
22	97095–06010	BOLT	2	2	2	2		
23	92995–06100	WASHER, SPRING	2	2	2	2		
24	92995–06600	WASHER	2	2	2	2		
25	97013–06025	BOLT	2	2	2	2		
26	92903–06600	WASHER, PLATE	2	2	2	2		

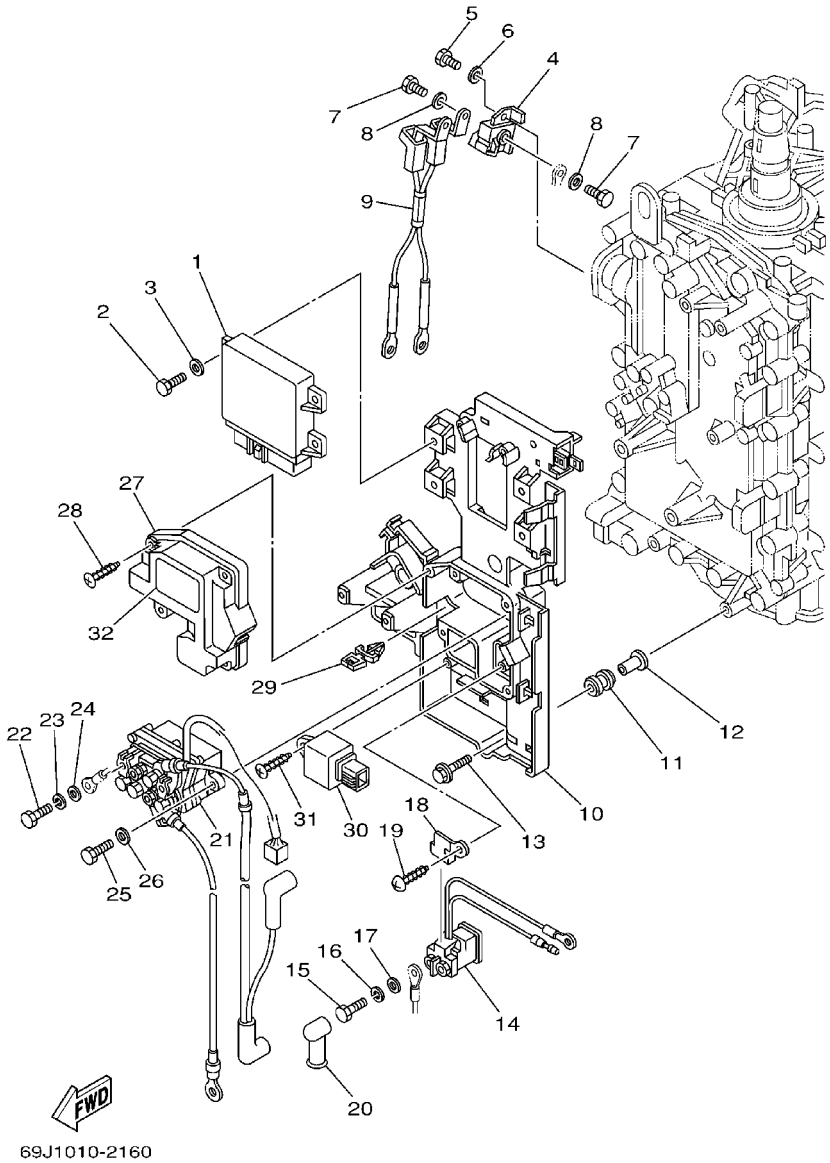

FIG. 17 ELECTRICAL 2

REF. NO.	PART NO.	DESCRIPTION	69J2	60L2	69K2	60M2		REMARKS
27	69J–81942–00	COVER	1	1	1	1		
28	90169–05M00	SCREW, TRUSS HEAD TAPPING	4	4	4	4		
29	90464–07M56	CLAMP	2	2	2	2		
30	68V–81950–00	RELAY ASSY	1	1	1	1		
31	97780–60625	SCREW, TAPPING	1	1	1	1		
32	69J–81919–00	GRAPHIC, REGULATOR	1	1	1	1		

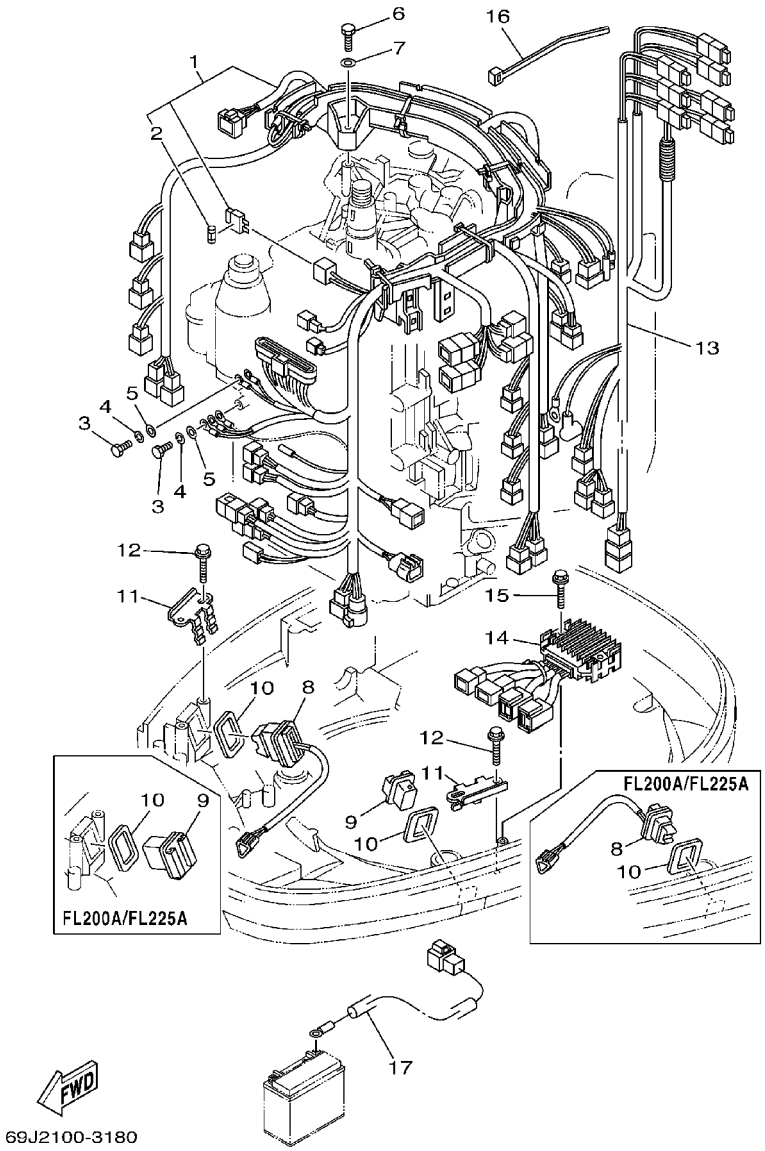

FIG. 18 ELECTRICAL 3

REF. NO.	PART NO.	DESCRIPTION	69J2	60L2	69K2	60M2		REMARKS
1	69J–82590–30	WIRE HARNESS ASSY	1	1	1	1		FOR USA,CANADA
	69J–82590–20	WIRE HARNESS ASSY	1	1	1	1		FOR OCEANIA,CARIB
2	67F–82151–20	.FUSE	2	2	2	2		
3	97095–06020	BOLT	2	2	2	2		
4	92995–06100	WASHER, SPRING	2	2	2	2		
5	92995–06600	WASHER	2	2	2	2		
6	97095–06035	BOLT	3	3	3	3		
7	92995–06600	WASHER	3	3	3	3		
8	69J–82563–00	TRIM & TILT SWITCH ASSY	1	1	1	1		
9	69J–42723–00–8D	COVER, BOTTOM	1	1	1	1		
10	69J–82587–00	GASKET	2	2	2	2		
11	69J–83614–00	BRACKET	2	2	2	2		
12	90109–06M86	BOLT	4	4	4	4		
13	69J–8259N–10	WIRE HARNESS ASSY 3	1	1	1	1		
14	69J–83306–00	DRIVE UNIT ASSY	1	1	1	1		
15	90109–06M82	BOLT	2	2	2	2		
16	90465–13M18	CLAMP	6	6	6	6		
17	69J–81949–00	WIRE, LEAD (ISOLATOR CABLE)	1	1	1	1		AP

FIG. 19 STARTING MOTOR

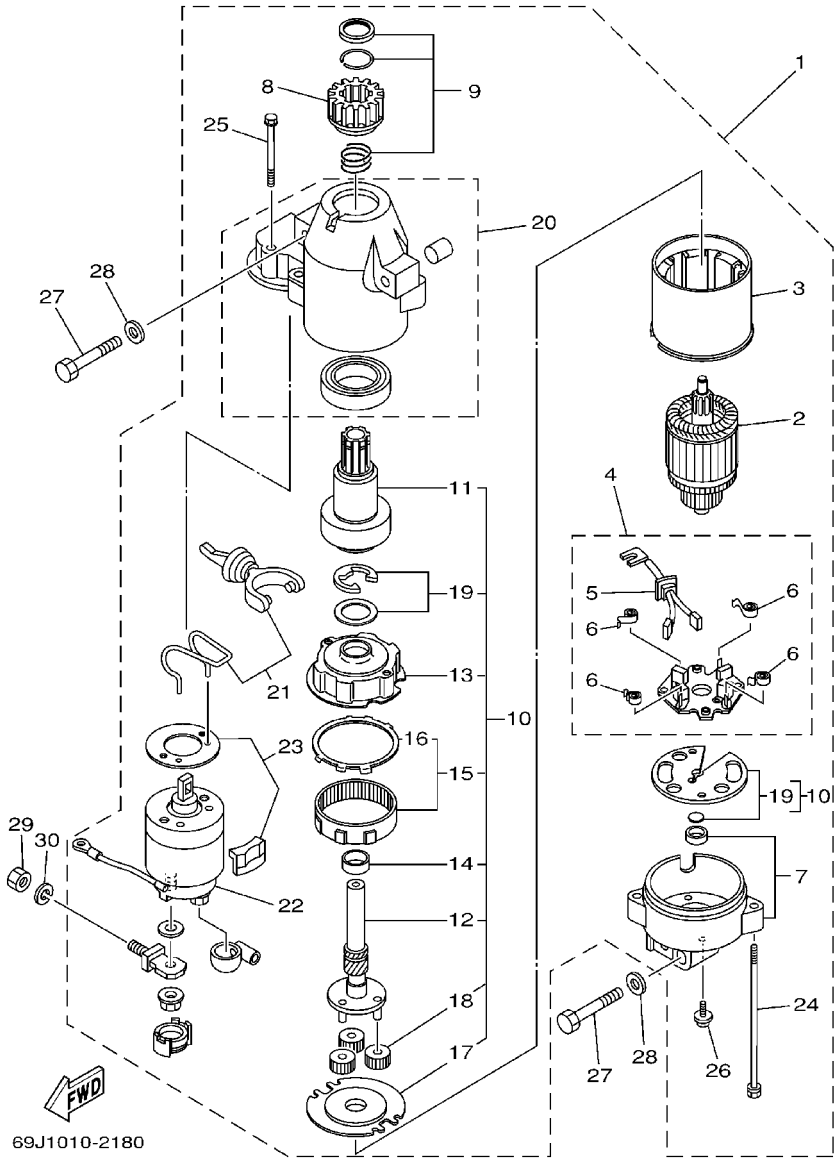

REF. NO.	PART NO.	DESCRIPTION	69J2	60L2	69K2	60M2		REMARKS
1	69J–81800–00	STARTING MOTOR ASSY	1	1	1	1		
2	67F–81850–00	.ARMATURE ASSY	1	1	1	1		
3	67F–81810–00	.STATOR ASSY	1	1	1	1		
4	69J–81840–00	.BRUSH HOLDER ASSY	1	1	1	1		
5	69J–81801–00	..BRUSH SET	1	1	1	1		
6	67F–81813–00	..SPRING, BRUSH	4	4	4	4		
7	68F–81820–00	.REAR BRACKET ASSY	1	1	1	1		
8	67F–81808–00	.PINION ASSY	1	1	1	1		
9	67F–81857–00	.PINION STOPPER SET	1	1	1	1		
10	67F–81807–00	.GEAR ASSY, STARTING MOTOR	1	1	1	1		
11	67F–81832–00	..CLUTCH, OVER RUN	1	1	1	1		
12	67F–81836–00	..SHAFT, PINION	1	1	1	1		
13	67F–81821–00	..BRACKET, CENTER 1	1	1	1	1		
14	67F–81841–00	..BEARING	1	1	1	1		
15	67F–81891–00	..GEAR, RING	1	1	1	1		
16	67F–8183R–00	...GASKET	1	1	1	1		
17	67F–81830–00	..BRACKET, CENTER 2	1	1	1	1		
18	67F–8183T–00	..GEAR, IDLER	3	3	3	3		
19	67F–81809–00	..WASHER KIT	1	1	1	1		
20	69J–81842–00	.COVER	1	1	1	1		
21	69J–81839–00	.LEVER ASSY	1	1	1	1		
22	69J–81941–00	.STARTER RELAY ASSY	1	1	1	1		
23	69J–81869–00	.COVER, DUST	1	1	1	1		
24	6K7–81826–10	.BOLT	2	2	2	2		
25	69J–81828–00	.BOLT 2	2	2	2	2		
26	67F–81846–00	.SCREW	2	2	2	2		
27	97013–08045	BOLT	3	3	3	3		

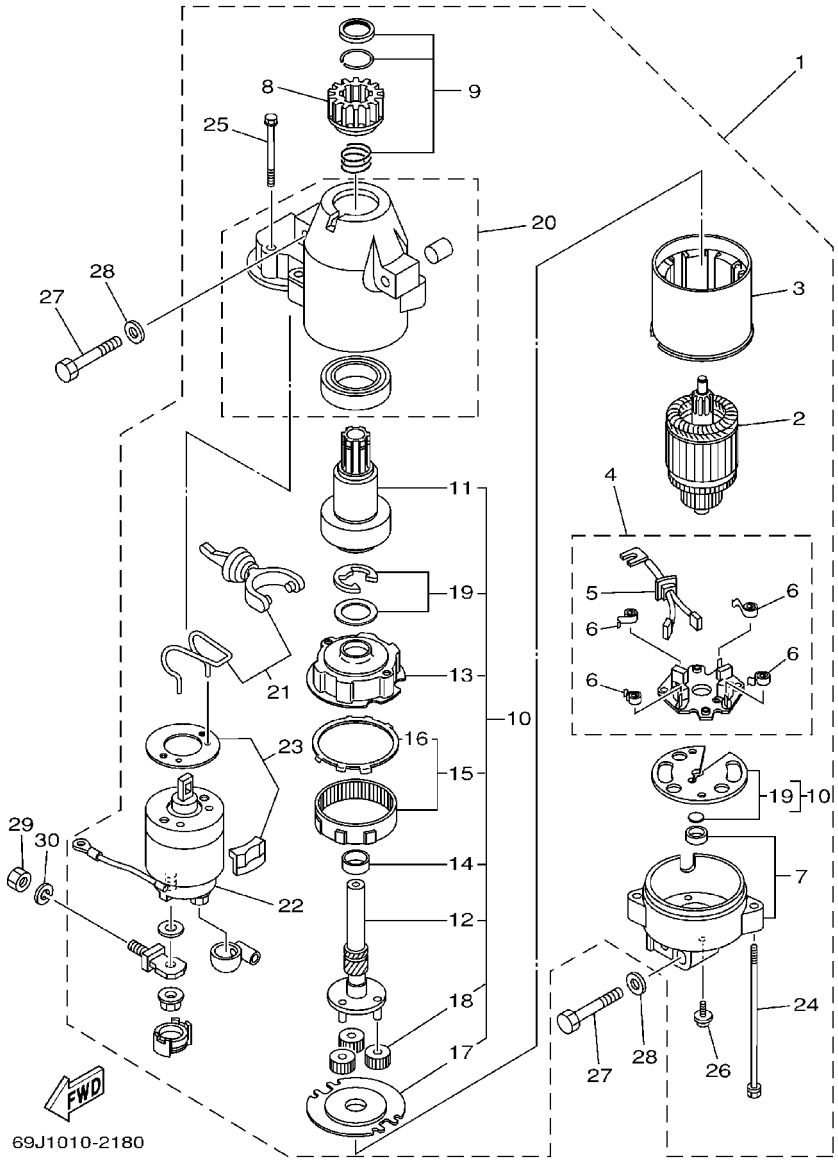

FIG. 19 STARTING MOTOR

REF. NO.	PART NO.	DESCRIPTION	69J2	60L2	69K2	60M2		REMARKS
28	92903-08600	WASHER, PLATE	3	3	3	3		
29	95333-08600	NUT	1	1	1	1		
30	92903-08100	WASHER, SPRING	1	1	1	1		

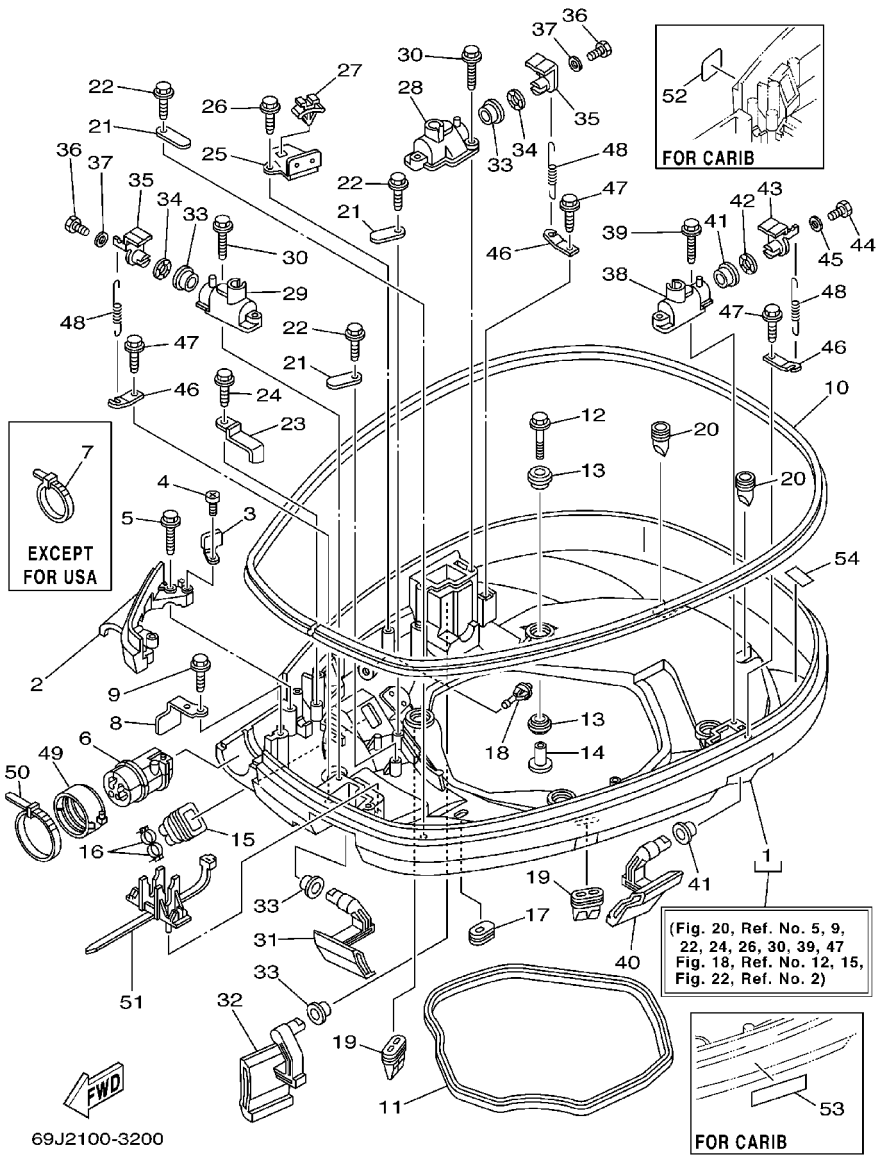

FIG. 20 BOTTOM COWLING 1

REF. NO.	PART NO.	DESCRIPTION	69J2	60L2	69K2	60M2		REMARKS
1	69J–42710–01–8D	BOTTOM COWLING ASSY	1	1	1	1		
2	69J–42738–01–5B	PLATE, FITTING	1	1	1	1		
3	69J–42744–10	STAY	1	1	1	1		
4	97885–06010	SCREW, PAN HEAD	1	1	1	1		
5	90109–06M82	BOLT	2	2	2	2		
6	69J–42725–01	GROMMET	1	1	1	1		
7	90465–13M30	CLAMP	1	1	1	1		EXCEPT FOR USA
8	64D–42738–10–5B	PLATE, FITTING	1	1	1	1		
9	90109–06M82	BOLT	1	1	1	1		
10	69J–42615–00	SEAL	1	1	1	1		
11	69J–42716–00	RUBBER, SEAL 1	1	1	1	1		
12	90119–08M22	BOLT, WITH WASHER	4	4	4	4		
13	90480–22M81	GROMMET	8	8	8	8		
14	90387–08M37	COLLAR	4	4	4	4		
15	6H1–42726–20	GROMMET	1	1	1	1		
16	90465–11M10	CLAMP	2	2	2	2		
17	61A–42727–00	GROMMET	1	1	1	1		
18	69J–44391–00	NIPPLE, HOSE	1	1	1	1		
19	69J–42717–00	RUBBER, SEAL 2	2	2	2	2		
20	61A–42717–00	RUBBER, SEAL 2	2	2	2	2		
21	6E5–82588–00	PLATE	3	3	3	3		
22	90109–06M81	BOLT	3	3	3	3		
23	90462–20001	CLAMP	1	1	1	1		
24	90109–06M86	BOLT	1	1	1	1		
25	69J–82554–00	STAY, NEUTRAL SWITCH	1	1	1	1		
26	90109–06M86	BOLT	1	1	1	1		
27	90464–09M47	CLAMP	1	1	1	1		

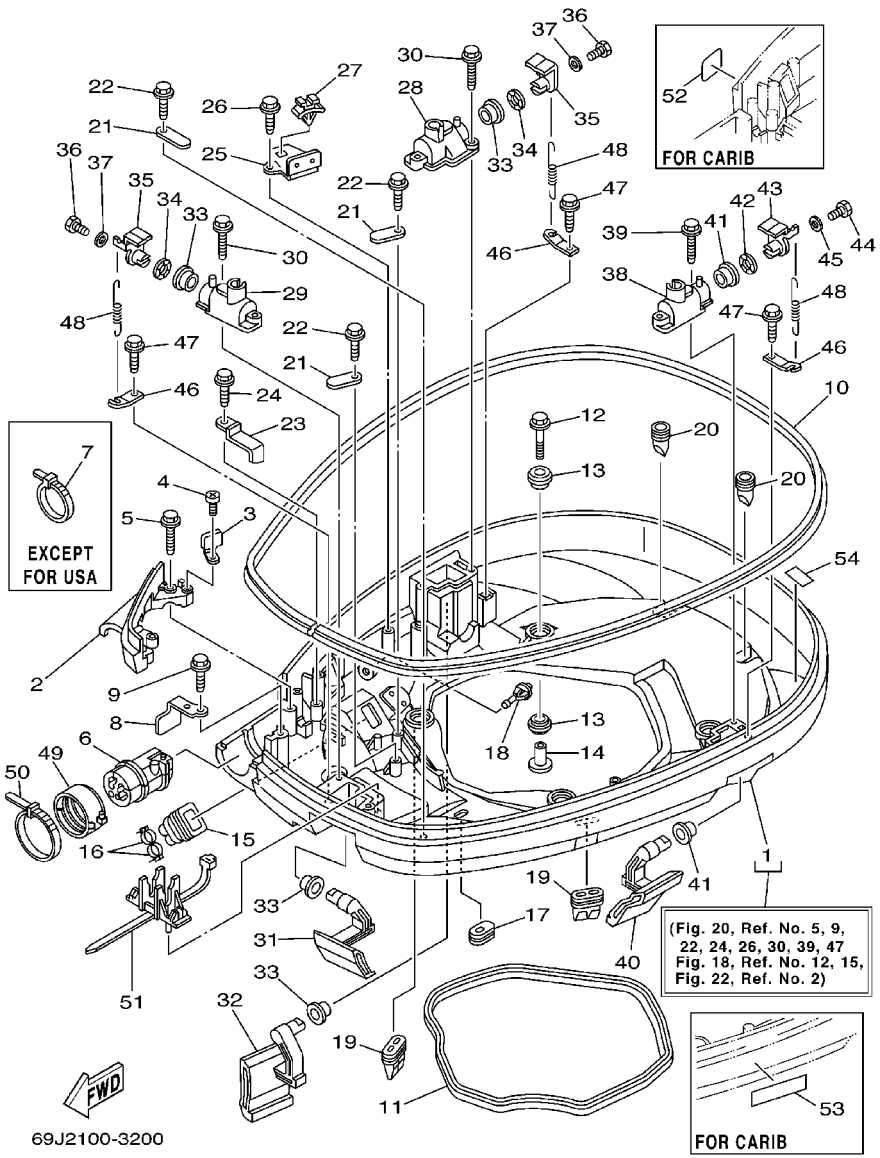

FIG. 20 BOTTOM COWLING 1

REF. NO.	PART NO.	DESCRIPTION	69J2	60L2	69K2	60M2		REMARKS
28	68F-42828-00-5B	PLATE, CLAMP	1	1	1	1		
29	69J-42828-00-5B	PLATE, CLAMP	1	1	1	1		
30	90109-06M82	BOLT	4	4	4	4		
31	69J-42815-00-8D	LEVER, CLAMP	1	1	1	1		
32	69J-42817-00-8D	LEVER, CLAMP	1	1	1	1		
33	90386-15M73	BUSH	4	4	4	4		
34	90206-15M18	WASHER, WAVE	2	2	2	2		
35	68F-42818-00	LEVER, CLAMP	2	2	2	2		
36	97095-06020	BOLT	2	2	2	2		
37	90201-06068	WASHER, PLATE	2	2	2	2		
38	68F-42828-10-5B	PLATE, CLAMP	1	1	1	1		
39	90109-06M82	BOLT	2	2	2	2		
40	69J-42816-00-8D	LEVER, CLAMP	1	1	1	1		
41	90386-15M73	BUSH	2	2	2	2		
42	90206-15M18	WASHER, WAVE	1	1	1	1		
43	67F-42818-00	LEVER, CLAMP	1	1	1	1		
44	97095-06020	BOLT	1	1	1	1		
45	90201-06068	WASHER, PLATE	1	1	1	1		
46	64D-43144-00	HOOK, SPRING	3	3	3	3		
47	90109-06M86	BOLT	3	3	3	3		
48	90506-16M34	SPRING, TENSION	3	3	3	3		
49	68F-42753-00	FASTNER	1	1	1	1		FOR USA
50	90464-20258	CLAMP	1	1	1	1		FOR USA
51	68V-82594-00	CLAMP	1	1	1	1		
52	6A1-28176-00	LABEL, CAUTION	1	1	1	1		FOR CARIB
53	6E3-8257H-00	PLATE, MARK	1	1	1	1		FOR CARIB
54	67F-82377-00	LABEL	1	1	1	1		

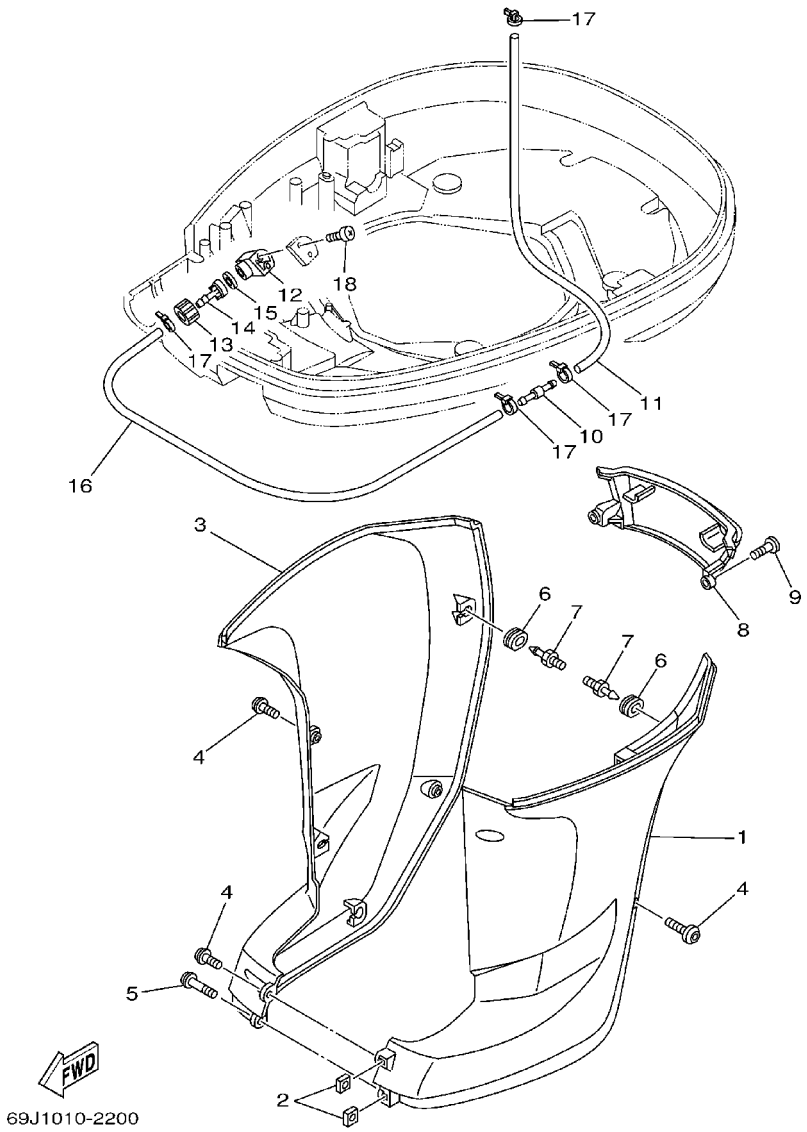

FIG. 21 BOTTOM COWLING 2

REF. NO.	PART NO.	DESCRIPTION	69J2	60L2	69K2	60M2		REMARKS
1	69J-42741-00-8D	APRON	1	1	1	1		
2	90173-06001	NUT, SQUARE	2	2	2	2		
3	69J-42771-00-8D	APRON	1	1	1	1		
4	90111-06025	BOLT	5	5	5	5		
5	90111-06026	BOLT	1	1	1	1		
6	90480-14M17	GROMMET	6	6	6	6		
7	69J-42774-00	STAY, APRON 1	6	6	6	6		
8	69J-45151-00-8D	COVER, UPPER CASING	1	1	1	1		
9	90111-06025	BOLT	2	2	2	2		
10	6E5-24379-00	PIPE, JOINT 4	1	1	1	1		
11	90445-11012	HOSE (L600)	1	1	1	1		
12	68T-12572-00	ADAPTER	1	1	1	1		
13	6R3-12581-00	JOINT, HOSE 1	1	1	1	1		
14	6R3-12582-00	JOINT, HOSE 2	1	1	1	1		
15	6R3-12583-00	GASKET, HOSE JOINT	1	1	1	1		
16	90445-11028	HOSE	1	1	1	1		
17	90465-11M10	CLAMP	4	4	4	4		
18	97780-60520	SCREW, TAPPING	2	2	2	2		

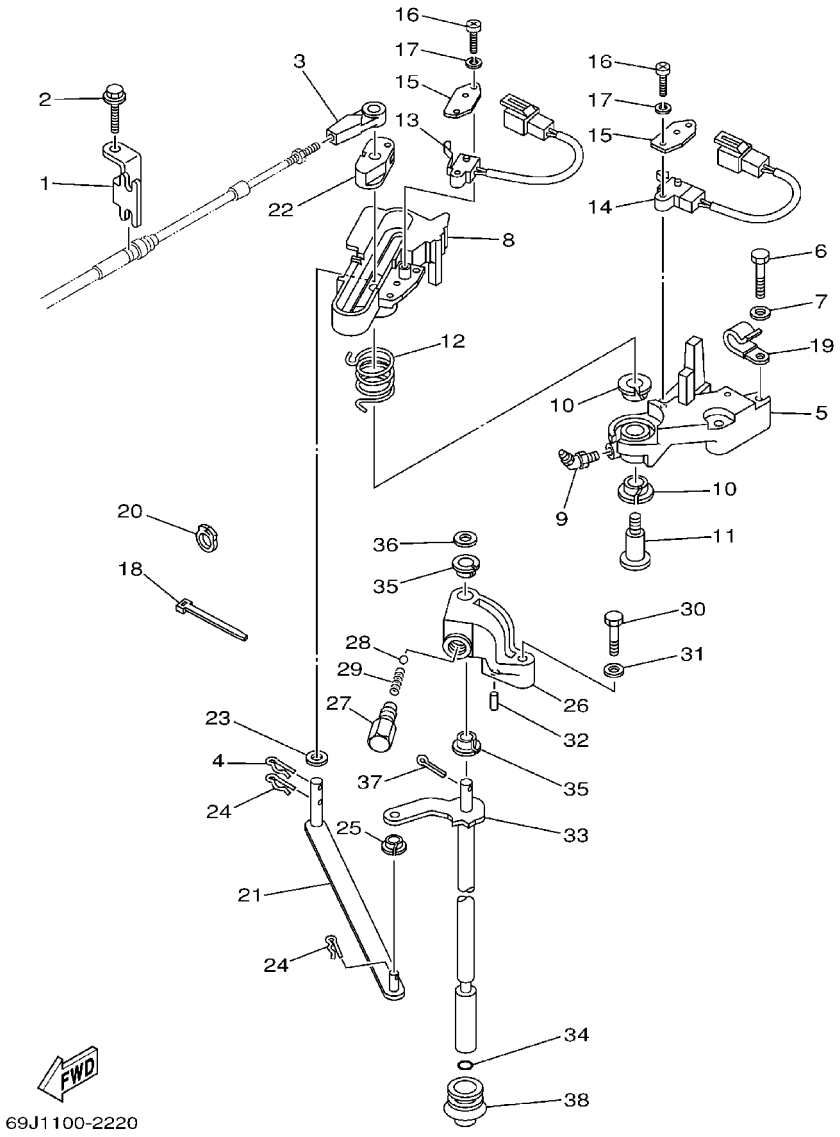

FIG. 22 CONTROL 1

REF. NO.	PART NO.	DESCRIPTION	69J2	60L2	69K2	60M2		REMARKS
1	69J-48531-00	BRACKET, REMOTE CONTROL 1	1	1	1	1		
2	90109-06M86	BOLT	1	1	1	1		
3	6E5-48344-00	CABLE END, REMOTE CONTROL	1	1	1	1		
4	90468-18008	CLIP	1	1	1	1		
5	69J-44117-00-1S	BRACKET	1	1	1	1		
6	97095-06035	BOLT	2	2	2	2		
7	92995-06600	WASHER	2	2	2	2		
8	69J-44176-01-1S	BRACKET	1	1	1	1		
9	93700-06M01	NIPPLE, GREASE	1	1	1	1		
10	90386-12069	BUSH	2	2	2	2		
11	90109-08019	BOLT	1	1	1	1		
12	90508-20020	SPRING, TORSION	1	1	1	1		
13	68F-8259F-00	SWITCH ASSY	1	1	1	1		
14	69J-8259F-00	SWITCH ASSY	1	1	1	1		
15	61A-82588-00	PLATE	2	2	2	2		
16	97885-04016	SCREW, PAN HEAD	4	4	4	4		
17	92995-04100	WASHER	4	4	4	4		
18	90465-11M10	CLAMP	1	1	1	1		
19	90465-06M86	CLAMP	1	1	1	1		
20	90464-09010	CLAMP	1	1	1	1		
21	69J-44121-00	LEVER, SHIFT ROD	1	1	1	1		
22	69J-44122-00	BUSHING, SHIFT ROD LEVER	1	1	1	1		
23	90202-08M20	WASHER, PLATE	1	1	1	1		
24	90468-18008	CLIP	2	2	2	2		
25	90386-06M12	BUSH	1	1	1	1		
26	69J-44118-00	BRACKET	1	1	1	1		
27	648-42715-00	BUSHING	1	1	1	1		

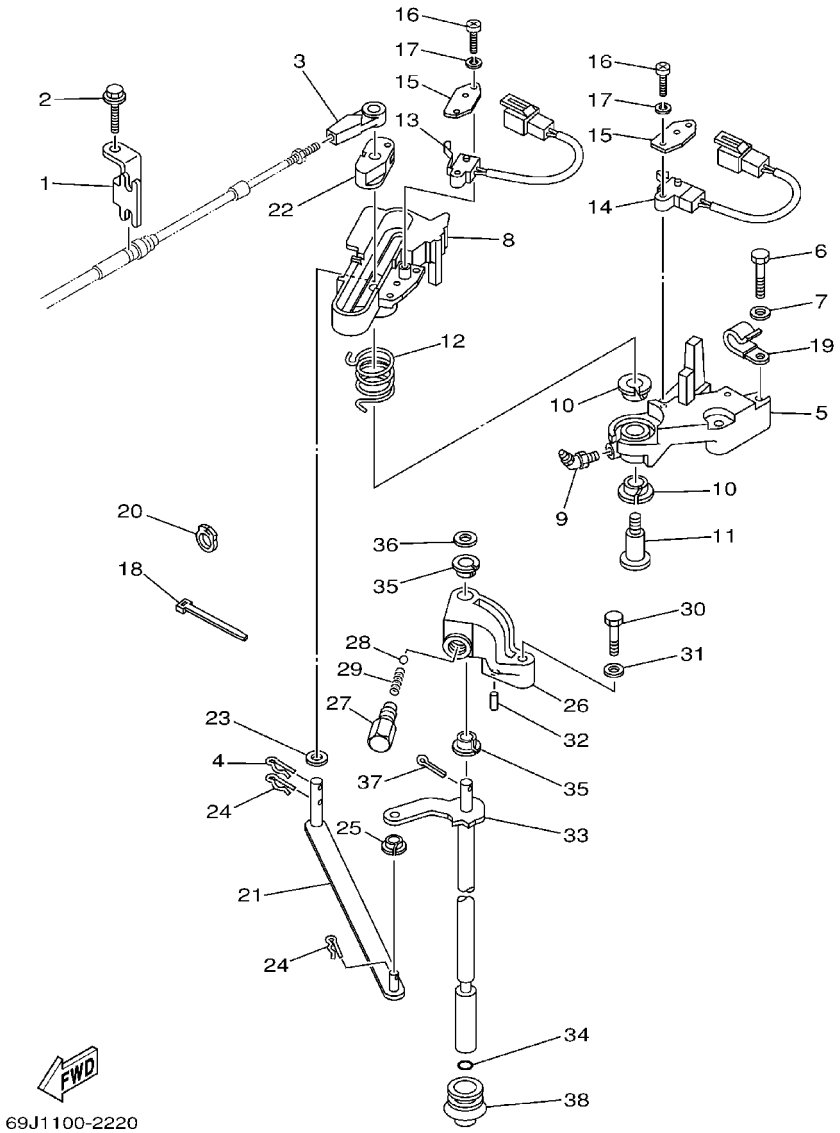

FIG. 22 CONTROL 1

REF. NO.	PART NO.	DESCRIPTION	69J2	60L2	69K2	60M2		REMARKS
28	93501-04M02	BALL	1	1	1	1		
29	90501-12082	SPRING, COMPRESSION	1	1	1	1		
30	97075-06030	BOLT	1	1	1	1		
31	92995-06600	WASHER	1	1	1	1		
32	91690-30010	PIN, SPRING	1	1	1	1		
33	69J-44120-00	HANDLE GEAR SHIFT ASSY	1	1	1	1		X
	69J-44120-10	HANDLE GEAR SHIFT ASSY	1		1			U
34	93210-09165	O-RING	1	1	1	1		
35	90386-90M90	BUSH	2	2	2	2		
36	90201-09M02	WASHER, PLATE	1	1	1	1		
37	91490-20015	PIN, COTTER	1	1	1	1		
38	6E5-42724-00	GROMMET	1	1	1	1		

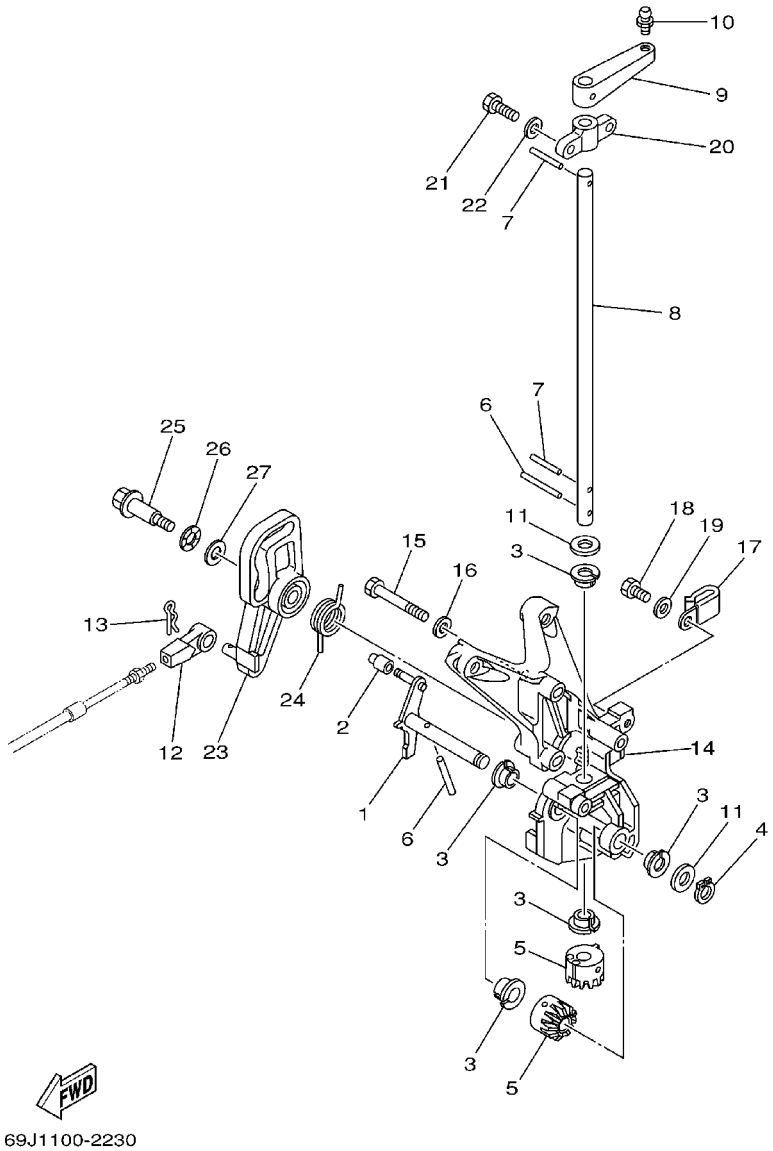

FIG. 23 CONTROL 2

REF. NO.	PART NO.	DESCRIPTION	69J2	60L2	69K2	60M2		REMARKS
1	69J–42154–00	LEVER, THROTTLE CONTROL	1	1	1	1		
2	68V–42171–00	BUSHING	1	1	1	1		
3	90386–10025	BUSH	5	5	5	5		
4	93410–10082	CIRCLIP	1	1	1	1		
5	69J–42152–00–94	GEAR	2	2	2	2		
6	91690–30025	PIN, SPRING	2	2	2	2		
7	91690–30018	PIN, SPRING	2	2	2	2		
8	69J–42153–00	SHAFT, THROTTLE CONTROL	1	1	1	1		
9	69J–41632–00–94	LEVER, MAGNETO CONTROL	1	1	1	1		
10	663–85518–00	JOINT, BALL	1	1	1	1		
11	90201–10M02	WASHER, PLATE	2	2	2	2		
12	6E5–48344–00	CABLE END, REMOTE CONTROL	1	1	1	1		
13	90468–18008	CLIP	1	1	1	1		
14	69J–41661–00–94	BRACKET	1	1	1	1		
15	97095–06045	BOLT	5	5	5	5		
16	92995–06600	WASHER	5	5	5	5		
17	90465–06M67	CLAMP	2	2	2	2		
18	97095–06014	BOLT	2	2	2	2		
19	92995–06600	WASHER	2	2	2	2		
20	676–41662–00	BRACKET	1	1	1	1		
21	97095–06020	BOLT	2	2	2	2		
22	92995–06600	WASHER	2	2	2	2		
23	69J–41213–00	CAM, ACCEL.	1	1	1	1		
24	69J–44135–00	SPRING	1	1	1	1		
25	90109–06040	BOLT	1	1	1	1		
26	90206–10M04	WASHER, WAVE	1	1	1	1		
27	90201–10M02	WASHER, PLATE	1	1	1	1		

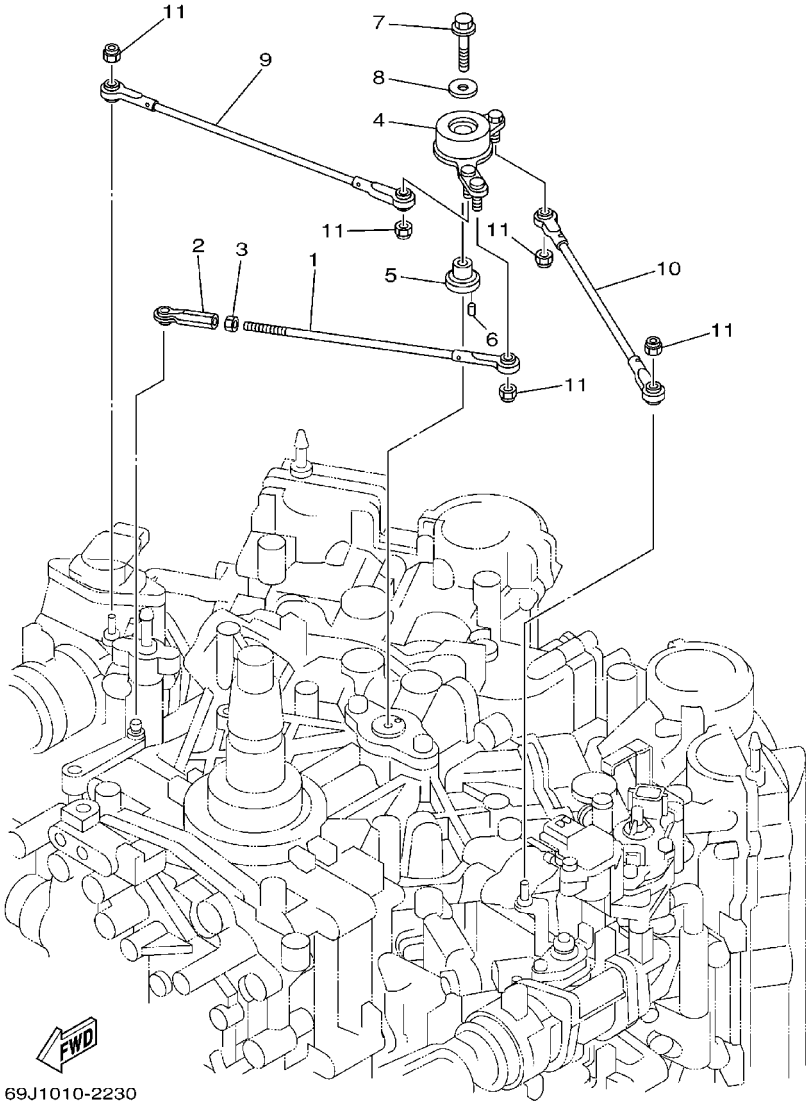

FIG. 24 CONTROL 3

REF. NO.	PART NO.	DESCRIPTION	69J2	60L2	69K2	60M2		REMARKS
1	69J–41241–00	ROD, LINK	1	1	1	1		
2	682–41237–00	JOINT, LINK	1	1	1	1		
3	95380–05600	NUT	1	1	1	1		
4	69J–41210–00	ACCEL. ARM ASSY	1	1	1	1		
5	69J–41635–00	SHAFT, LINK CONNECTING	1	1	1	1		
6	91690–30008	PIN, SPRING	1	1	1	1		
7	95895–06030	BOLT, FLANGE	1	1	1	1		
8	90201–06M31	WASHER, PLATE	1	1	1	1		
9	69J–41211–00	LINK, ACCEL.	1	1	1	1		
10	69J–41636–00	ROD, MAGNETO CONTROL	1	1	1	1		
11	95680–05100	NUT, U	5	5	5	5		

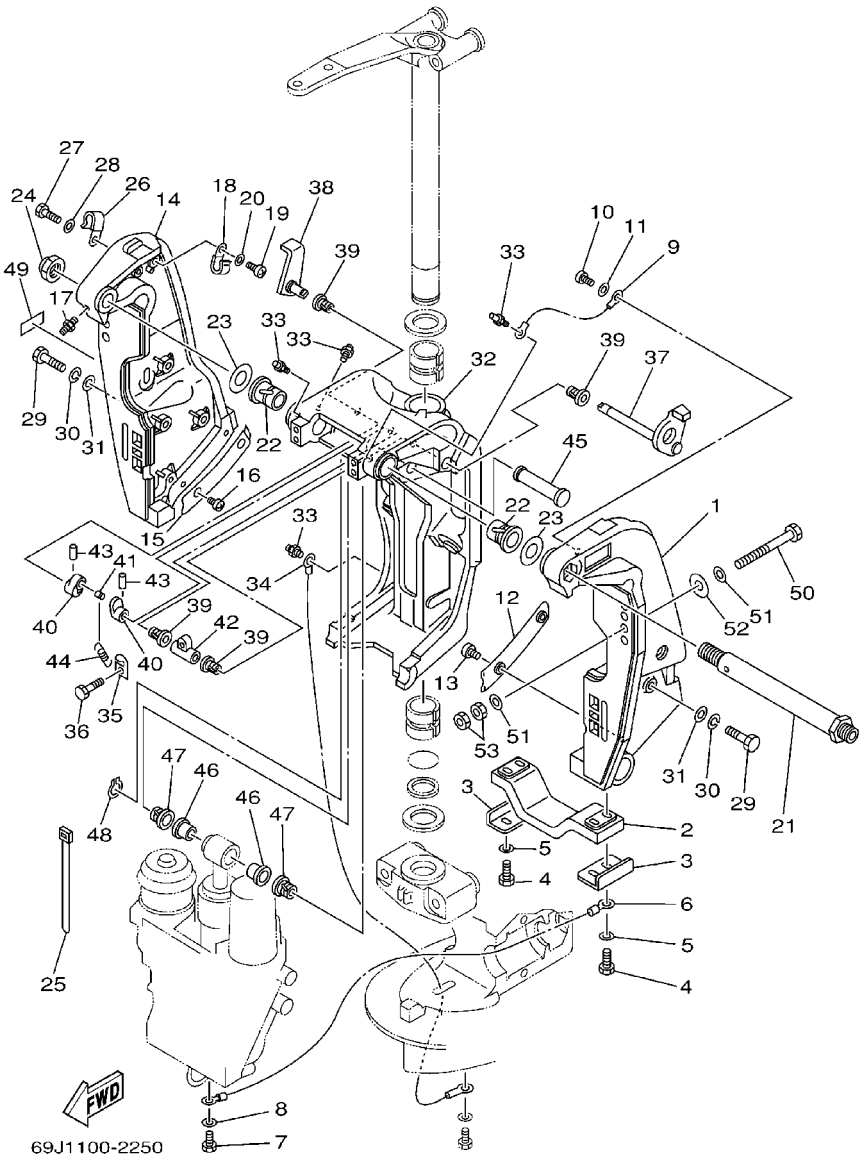

FIG. 25 BRACKET 1

REF. NO.	PART NO.	DESCRIPTION	69J2	60L2	69K2	60M2		REMARKS
1	69J-43111-00-8D	BRACKET, CLAMP	1	1	1	1		
2	6G5-45251-02	ANODE	1	1	1	1		
3	6G5-44526-00	PLATE	2	2	2	2		
4	97095-06025	BOLT	4	4	4	4		
5	92995-06600	WASHER	4	4	4	4		
6	6H1-82148-00	WIRE, LEAD 4	1	1	1	1		
7	97095-06010	BOLT	1	1	1	1		
8	92995-06600	WASHER	1	1	1	1		
9	6E5-82148-00	WIRE, LEAD 4	1	1	1	1		
10	97885-06012	SCREW, PAN HEAD	1	1	1	1		
11	92995-06600	WASHER	1	1	1	1		
12	61A-43132-00	WASHER, FRICTION	1	1	1	1		
13	97885-06010	SCREW, PAN HEAD	2	2	2	2		
14	69J-43112-00-8D	BRACKET, CLAMP	1	1	1	1		
15	61A-43133-00	WASHER,FRICTION	1	1	1	1		
16	97885-06010	SCREW, PAN HEAD	2	2	2	2		
17	93700-06M03	NIPPLE, GREASE	1	1	1	1		
18	90465-08M83	CLAMP	1	1	1	1		
19	97885-06012	SCREW, PAN HEAD	1	1	1	1		
20	92995-06600	WASHER	1	1	1	1		
21	6R3-43131-00	BOLT, CLAMP BRACKET	1	1	1	1		
22	90386-25M31	BUSH	2	2	2	2		
23	90201-26M59	WASHER, PLATE	2	2	2	2		
24	90185-22M11	NUT, SELF-LOCKING	1	1	1	1		
25	90465-11M10	CLAMP	4	4	4	4		
26	90465-08M83	CLAMP	1	1	1	1		
27	97095-06014	BOLT	1	1	1	1		

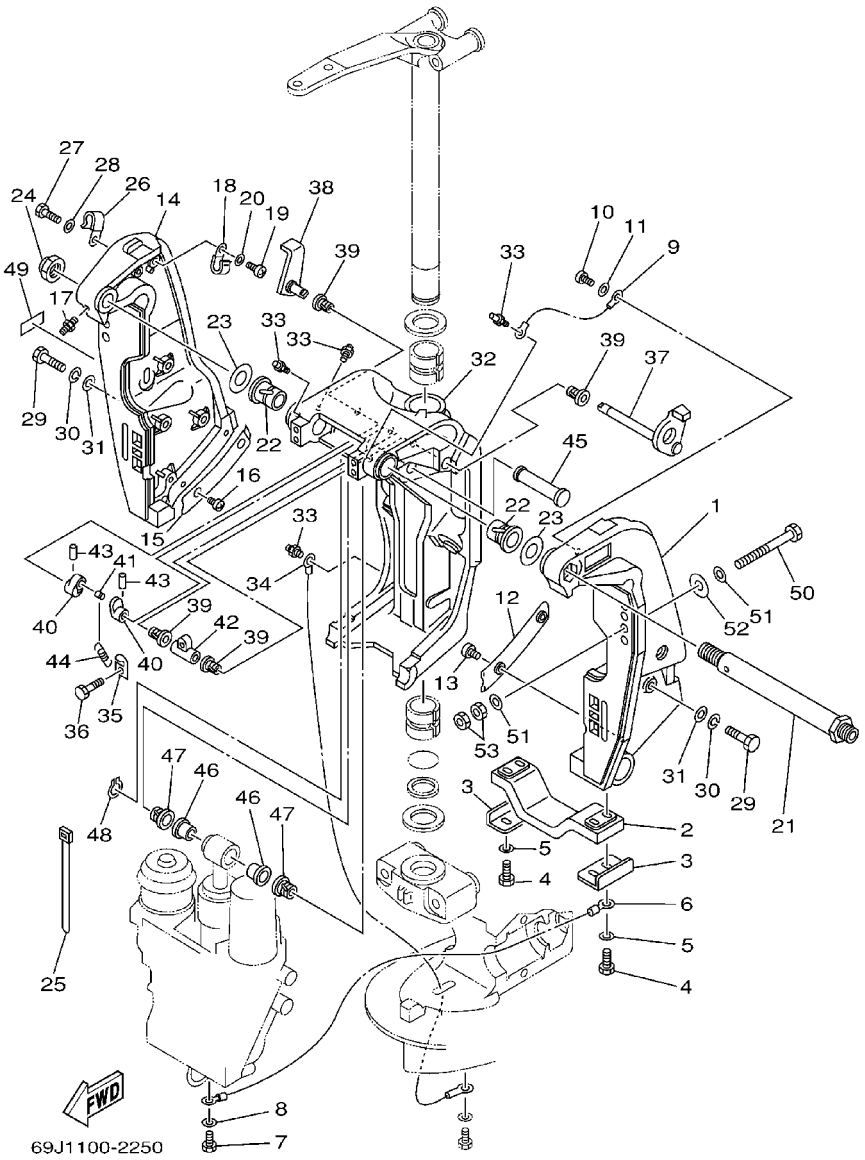

FIG. 25 BRACKET 1

REF. NO.	PART NO.	DESCRIPTION	69J2	60L2	69K2	60M2		REMARKS
28	92995–06600	WASHER	1	1	1	1		
29	97095–10045	BOLT	8	8	8	8		
30	92995–10100	WASHER	8	8	8	8		
31	92995–10600	WASHER	8	8	8	8		
32	61A–43311–21–8D	BRACKET, SWIVEL 1	1	1	1	1		
33	93700–06M03	NIPPLE, GREASE	5	5	5	5		
34	69J–82147–00	WIRE, LEAD 4	1	1	1	1		
35	6G5–43144–00	HOOK, SPRING	1	1	1	1		
36	97095–06010	BOLT	1	1	1	1		
37	61A–43181–01	LEVER, TILT STOP	1	1	1	1		
38	6G5–43185–02	LEVER, TILT STOP	1	1	1	1		
39	90386–10M16	BUSH	4	4	4	4		
40	6G5–43148–00	COLLAR, DISTANCE	2	2	2	2		
41	90249–06M19	PIN	1	1	1	1		
42	90387–10M02	COLLAR	1	1	1	1		
43	91690–30020	PIN, SPRING	2	2	2	2		
44	90506–16003	SPRING, TENSION	1	1	1	1		
45	6E5–43126–02	PIN, UPPER SHOCK MOUNT	1	1	1	1		
46	90386–18M63	BUSH	2	2	2	2		
47	90386–18M14	BUSH	2	2	2	2		
48	93410–18M02	CIRCLIP	1	1	1	1		
49	63V–82377–50	LABEL (SPARK,IGNITION)	1	1	1	1		FOR CANADA
50	90101–12M05	BOLT (L:130MM)	4	4	4	4		UR
	90101–12M77	BOLT (L:150MM)	2	2	2	2		UR FOR USA,CANADA ONLY
51	90201–13M01	WASHER, PLATE	8	8	8	8		
52	90201–12M05	WASHER, PLATE	4	4	4	4		
53	95380–12600	NUT	8	8	8	8		

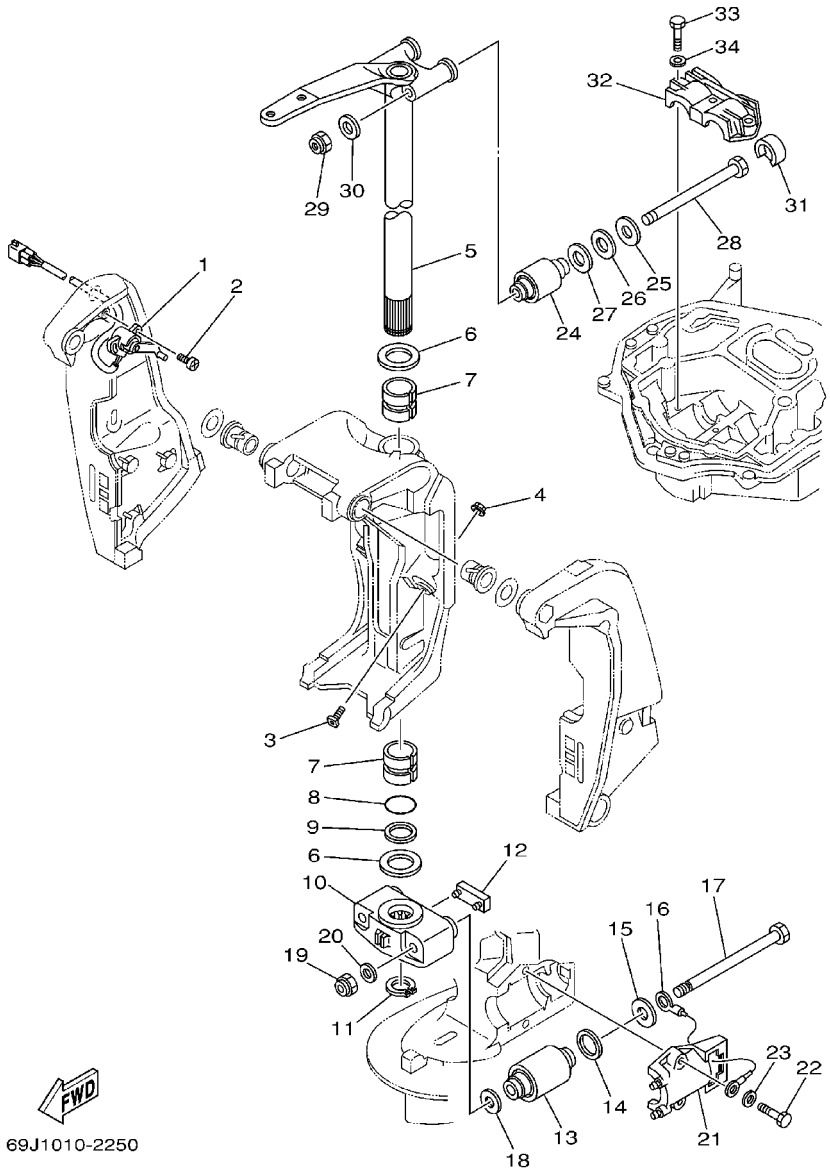

FIG. 26 BRACKET 2

REF. NO.	PART NO.	DESCRIPTION	69J2	60L2	69K2	60M2		REMARKS
1	69J–83672–00	TRIM SENDER	1	1	1	1		
2	97885–06016	SCREW, PAN HEAD	2	2	2	2		
3	61A–43376–00	BOLT, THRUST RECEIVER	2	2	2	2		
4	95780–10300	NUT, FLANGE	2	2	2	2		
5	69J–42510–00–8D	STEERING BRACKET ASSY	1	1	1	1		
6	90201–40M00	WASHER, PLATE	2	2	2	2		
7	90386–39M89	BUSH	2	2	2	2		
8	93210–35321	O–RING	1	1	1	1		
9	90202–40M47	WASHER, PLATE	1	1	1	1		
10	69J–44551–00–8D	HOUSING, LOWER MOUNT RUBBER	1	1	1	1		
11	93410–37M04	CIRCLIP	1	1	1	1		
12	61A–44575–00	DAMPER, LOWER MOUNT RUBBER	1	1	1	1		
13	66K–44555–00–94	MOUNT DAMPER, LOWER SIDE	2	2	2	2		
14	90202–32M19	WASHER, PLATE	2	2	2	2		
15	90201–16M55	WASHER, PLATE	2	2	2	2		
16	6E5–82149–00	WIRE, LEAD 3	1	1	1	1		
17	90109–14M48	BOLT	2	2	2	2		
18	90201–15M58	WASHER, PLATE	2	2	2	2		
19	90185–14M00	NUT, SELF–LOCKING	2	2	2	2		
20	92995–14600	WASHER	2	2	2	2		
21	61A–44552–01–94	HOUSING, LOWER MOUNT RUBBER	2	2	2	2		
22	97095–10045	BOLT	4	4	4	4		
23	92995–10600	WASHER	4	4	4	4		
24	66K–44514–00–94	MOUNT DAMPER, UPPER SIDE	2	2	2	2		
25	90201–16M01	WASHER, PLATE	2	2	2	2		
26	90202–28M46	WASHER, PLATE	2	2	2	2		
27	90201–28M01	WASHER, PLATE	2	2	2	2		

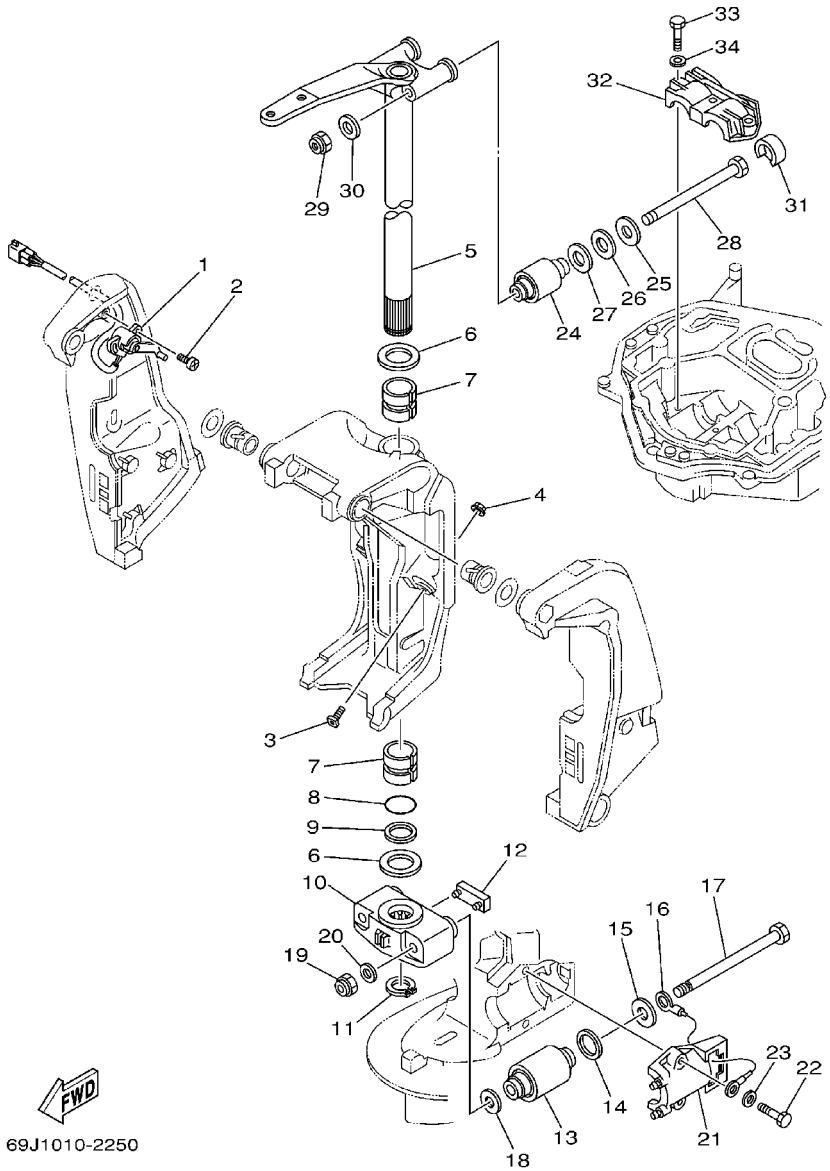

FIG. 26 BRACKET 2

REF. NO.	PART NO.	DESCRIPTION	69J2	60L2	69K2	60M2		REMARKS
28	90109–14M10	BOLT	2	2	2	2		
29	90185–14M00	NUT, SELF–LOCKING	2	2	2	2		
30	92995–14600	WASHER	2	2	2	2		
31	69J–44533–00	DAMPER, UPPER MOUNT RUBBER	2	2	2	2		
32	61A–44511–00–94	COVER, UPPER MOUNT	1	1	1	1		
33	97095–10045	BOLT	3	3	3	3		
34	92995–10600	WASHER	3	3	3	3		

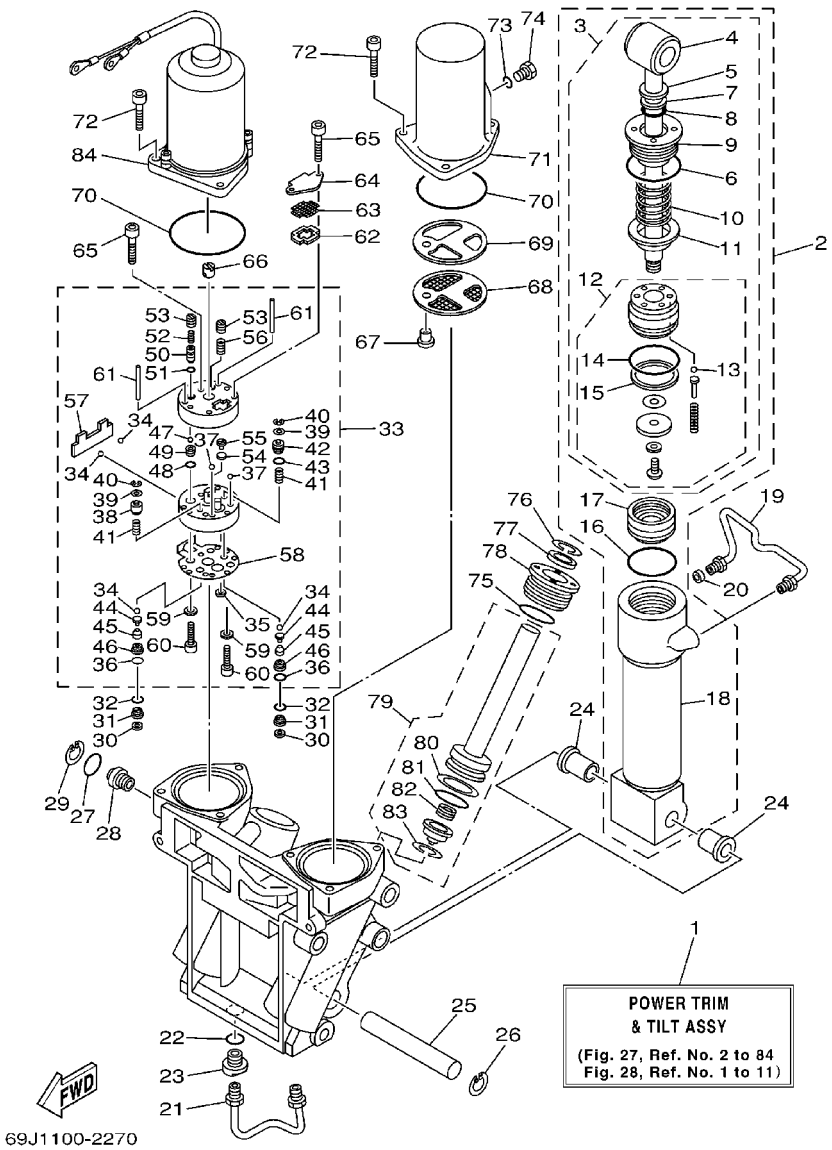

FIG. 27 POWER TRIM & TILT ASSY 1

REF. NO.	PART NO.	DESCRIPTION	69J2	60L2	69K2	60M2		REMARKS
1	69J–43800–00–4D	POWER TRIM & TILT ASSY	1	1	1	1		
2	69J–43840–00	POWER TILT ASSY	1	1	1	1		
3	69J–43810–00	.TILT PISTON SUB ASSY	1	1	1	1		
4	69J–43801–00	..ROD	1	1	1	1		
5	93106–19N50	..OIL SEAL	1	1	1	1		
6	6H1–43861–00	..O–RING	1	1	1	1		
7	6H1–43872–00	..RING, BACK UP	1	1	1	1		
8	61A–4389H–00	..O–RING	1	1	1	1		
9	61A–43811–00	..SCREW, CYLINDER END	1	1	1	1		
10	69J–4384H–00	..SPRING	1	1	1	1		
11	69J–4382E–00	..ADAPTOR 2	1	1	1	1		
12	69J–4380P–00	..PISTON SUB ASSY	1	1	1	1		
13	93505–32038	...BALL	5	5	5	5		
14	61A–43861–00	...O–RING	1	1	1	1		
15	61A–43871–00	...RING, BACK UP	1	1	1	1		
16	61A–43861–00	.O–RING	1	1	1	1		
17	6H1–43814–00	.PISTON, FREE	1	1	1	1		
18	61A–43813–01	.CYLINDER, TILT	1	1	1	1		
19	61A–43835–01	PIPE	1	1	1	1		
20	69J–4388J–00	PLUG 2	1	1	1	1		
21	69J–43833–00	PIPE	1	1	1	1		
22	93210–17239	O–RING	1	1	1	1		
23	69J–4388E–00	BOLT ,SCREW	1	1	1	1		
24	90386–18M14	BUSH	2	2	2	2		
25	61A–43818–00	PIN, LOWER SHOCK MOUNT	1	1	1	1		
26	61A–43876–00	RING, SNAP	1	1	1	1		
27	93210–18397	O–RING	1	1	1	1		

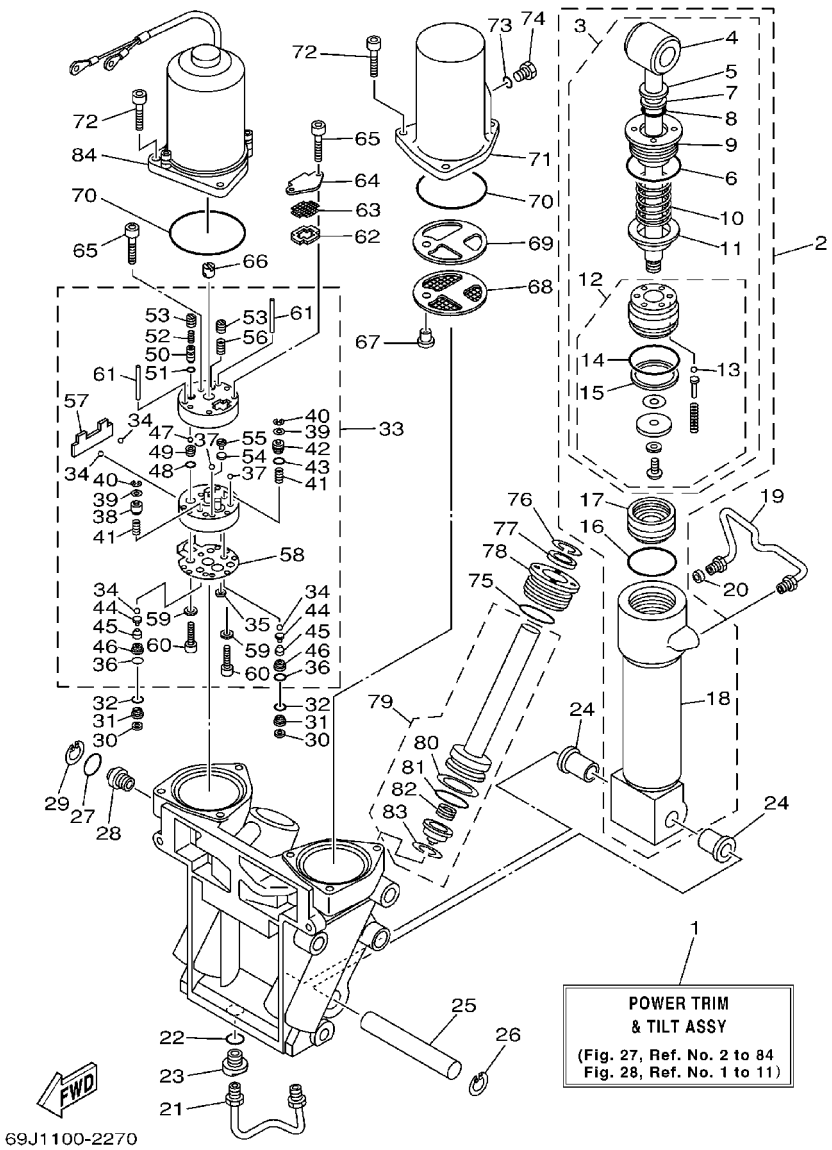

FIG. 27 POWER TRIM & TILT ASSY 1

REF. NO.	PART NO.	DESCRIPTION	69J2	60L2	69K2	60M2		REMARKS
28	69J–43845–00	SCREW, MANUAL RELEASE	1	1	1	1		
29	6H1–43875–00	RING, SNAP	1	1	1	1		
30	69J–4381C–00	FILTER 3	2	2	2	2		
31	69J–43899–00	PLATE STOPPER	2	2	2	2		
32	69J–4389J–00	O–RING	2	2	2	2		
33	69J–43830–00	GEAR PUMP ASSY	1	1	1	1		
34	93505–32038	.BALL	4	4	4	4		
35	69J–4381C–00	.FILTER 3	1	1	1	1		
36	69J–4389J–00	.O–RING	2	2	2	2		
37	93503–16003	.BALL	2	2	2	2		
38	69J–4384M–00	.PISTON, SHUTTLE 2	1	1	1	1		
39	69A–4384F–00	.SEAL, MAIN VALVE	2	2	2	2		
40	99001–03600	.CIRCLIP	2	2	2	2		
41	69J–43894–00	.SPRING, SHUTTLE RETURN	2	2	2	2		
42	69J–43841–00	.PISTON, SHUTTLE	1	1	1	1		
43	6H1–43883–00	.O–RING	1	1	1	1		
44	65W–4386A–00	.PIN, ABSORBER VALVE	2	2	2	2		
45	69J–43853–00	.SPRING, MAIN VALVE	2	2	2	2		
46	69J–43893–00	.WASHER	2	2	2	2		
47	93501–08001	.BALL	2	2	2	2		
48	93210–08391	.O–RING	1	1	1	1		
49	69J–43851–00	.SEAT, RELIEF VALVE	1	1	1	1		
50	69J–43844–00	.PIN, VALVE SUPPORT	1	1	1	1		
51	93210–064A5	.O–RING	1	1	1	1		
52	69J–43855–00	.SPRING, UP RELIEF	1	1	1	1		
53	69J–43843–00	.SCREW, VALVE LOCK	2	2	2	2		
54	6H1–4384G–11	.SEAL, RELIEF VALVE	1	1	1	1		

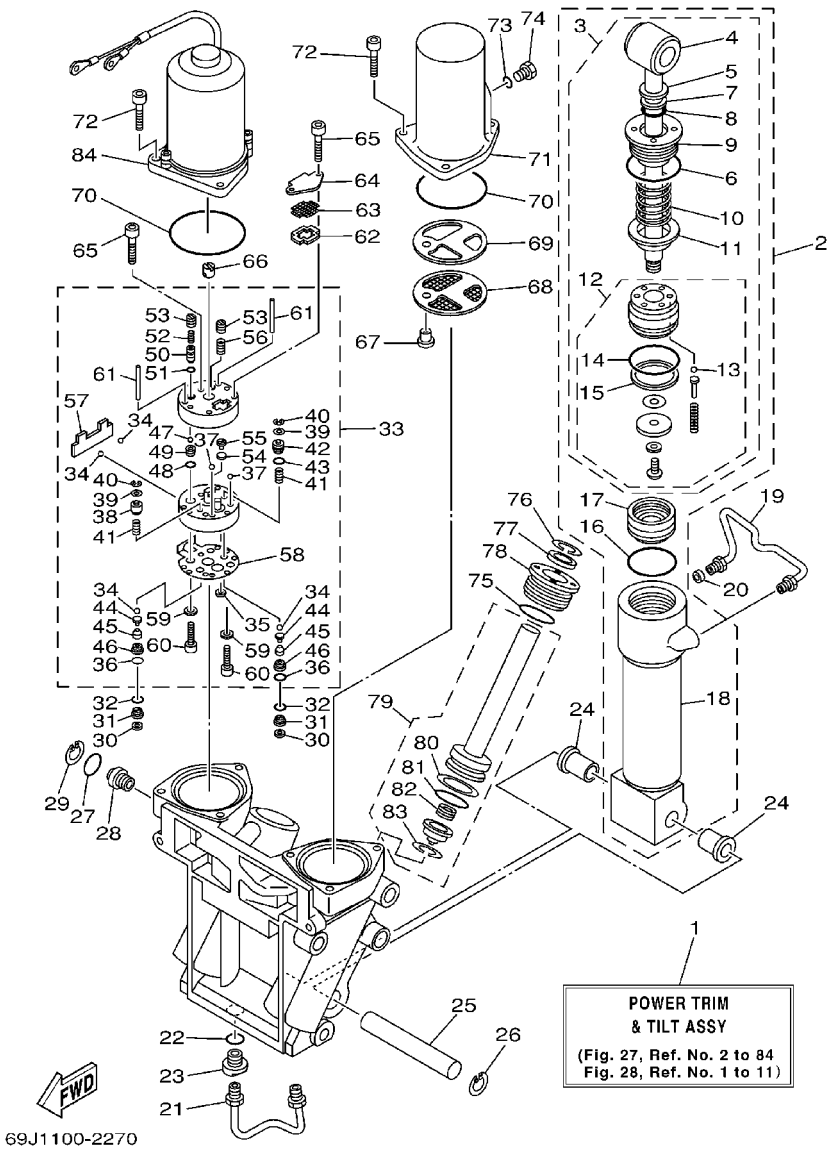

FIG. 27 POWER TRIM & TILT ASSY 1

REF. NO.	PART NO.	DESCRIPTION	69J2	60L2	69K2	60M2		REMARKS
55	6H1–43844–10	.PIN, VALVE SUPPORT	1	1	1	1		
56	6H1–43856–10	.SPRING, DOWN RELIEF	1	1	1	1		
57	69J–43854–00	.SPRING, MANUAL RELEASE	1	1	1	1		
58	69J–4384G–00	.SEAL, RELIEF VALVE	1	1	1	1		
59	CS3–4387G–00	.WASHER	2	2	2	2		
60	91318–05025	.BOLT	2	2	2	2		
61	93604–35236	.PIN, DOWEL	2	2	2	2		
62	69J–43871–00	RING, BACK UP	1	1	1	1		
63	69J–43816–00	FILTER 1	1	1	1	1		
64	69J–4381J–00	PLATE	1	1	1	1		
65	91318–05040	BOLT	3	3	3	3		
66	69J–43831–00	CONNECTOR, SHAFT	1	1	1	1		
67	69J–4388H–00	PLUG	1	1	1	1		
68	69J–43817–00	FILTER 2	1	1	1	1		
69	69J–4388F–00	SPACER	1	1	1	1		
70	6H1–43869–00	O–RING	2	2	2	2		
71	69J–43828–00	BODY, RESERVOIR	1	1	1	1		
72	69J–43888–00	BOLT, SOCKET	6	6	6	6		
73	93210–09165	O–RING	1	1	1	1		
74	6H1–43829–00	PLUG, RESERVOIR	1	1	1	1		
75	61A–43861–00	O–RING	2	2	2	2		
76	6T4–43875–00	RING, SNAP	2	2	2	2		
77	61A–43822–00	SEAL, TRIM DUST	2	2	2	2		
78	61A–43821–00	SCREW, TRIM CYLINDER END	2	2	2	2		
79	69J–43820–00	TRIM PISTON SUB ASSY	2	2	2	2		
80	61A–43874–00	.RING, BACK UP	1	1	1	1		
81	61A–43864–00	.O–RING	1	1	1	1		

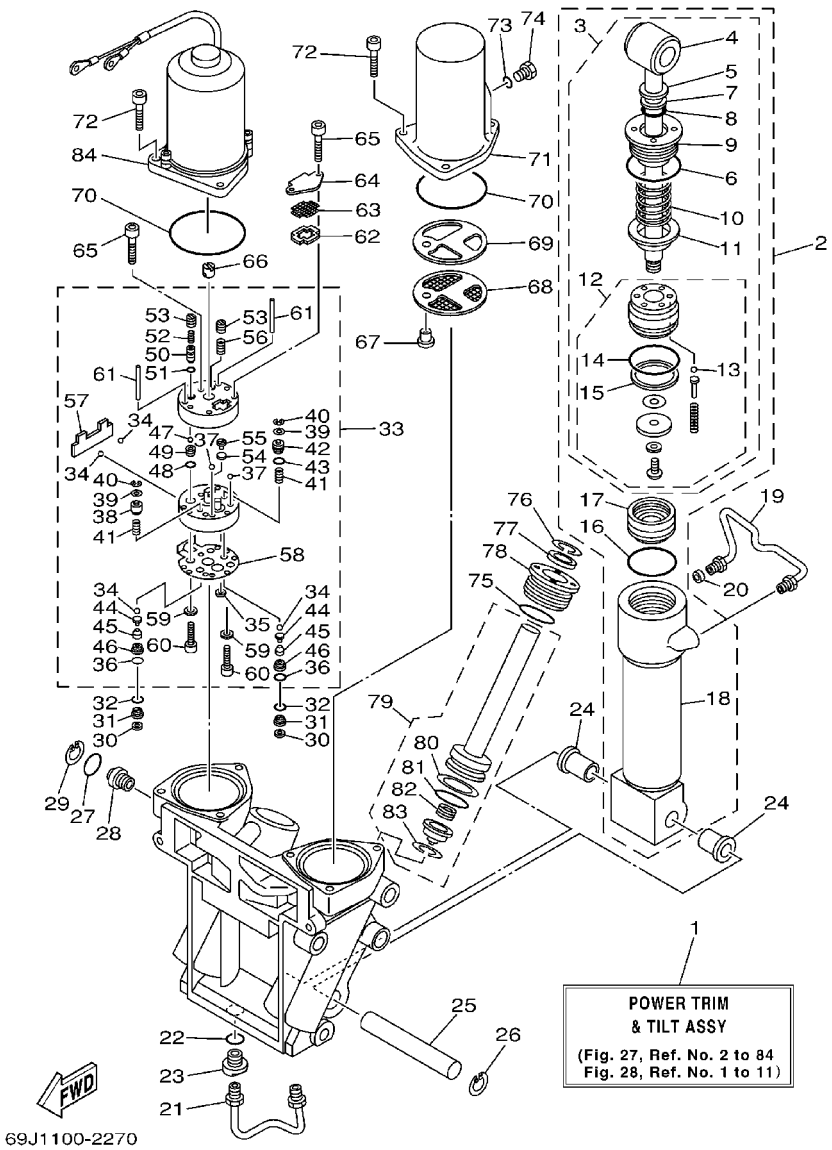

FIG. 27 POWER TRIM & TILT ASSY 1

REF. NO.	PART NO.	DESCRIPTION	69J2	60L2	69K2	60M2		REMARKS
82	61A–4384H–10	.SPRING	1	1	1	1		
83	61A–43875–10	.RING, SNAP	1	1	1	1		
84	69J–43880–00	MOTOR ASSY	1	1	1	1		REFER TO FIG.28

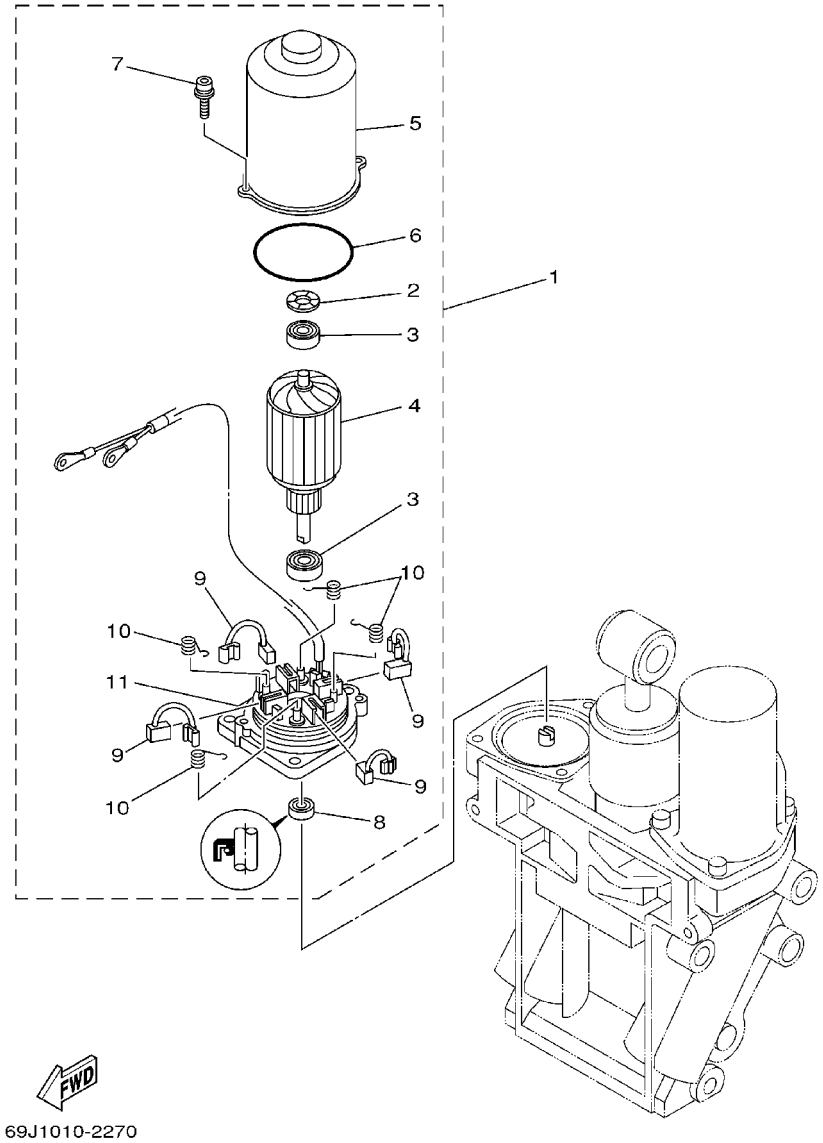

FIG. 28 POWER TRIM & TILT ASSY 2

REF. NO.	PART NO.	DESCRIPTION	69J2	60L2	69K2	60M2		REMARKS
1	69J–43880–00	MOTOR ASSY	1	1	1	1		
2	90206–14N50	.WASHER, WAVE	1	1	1	1		
3	93399–999T6	.BEARING	2	2	2	2		
4	69J–43805–00	.ARMATURE ASSY	1	1	1	1		
5	69J–43804–00	.STATOR ASSY	1	1	1	1		
6	69J–43861–00	.O–RING	1	1	1	1		
7	69J–43886–00	.BOLT	2	2	2	2		
8	69J–43882–00	.OIL SEAL	1	1	1	1		
9	69J–43891–00	.BRUSH 1	4	4	4	4		
10	69J–4386K–00	.SPRING, BRUSH	4	4	4	4		
11	69J–43881–00	.FRAME, END	1	1	1	1		

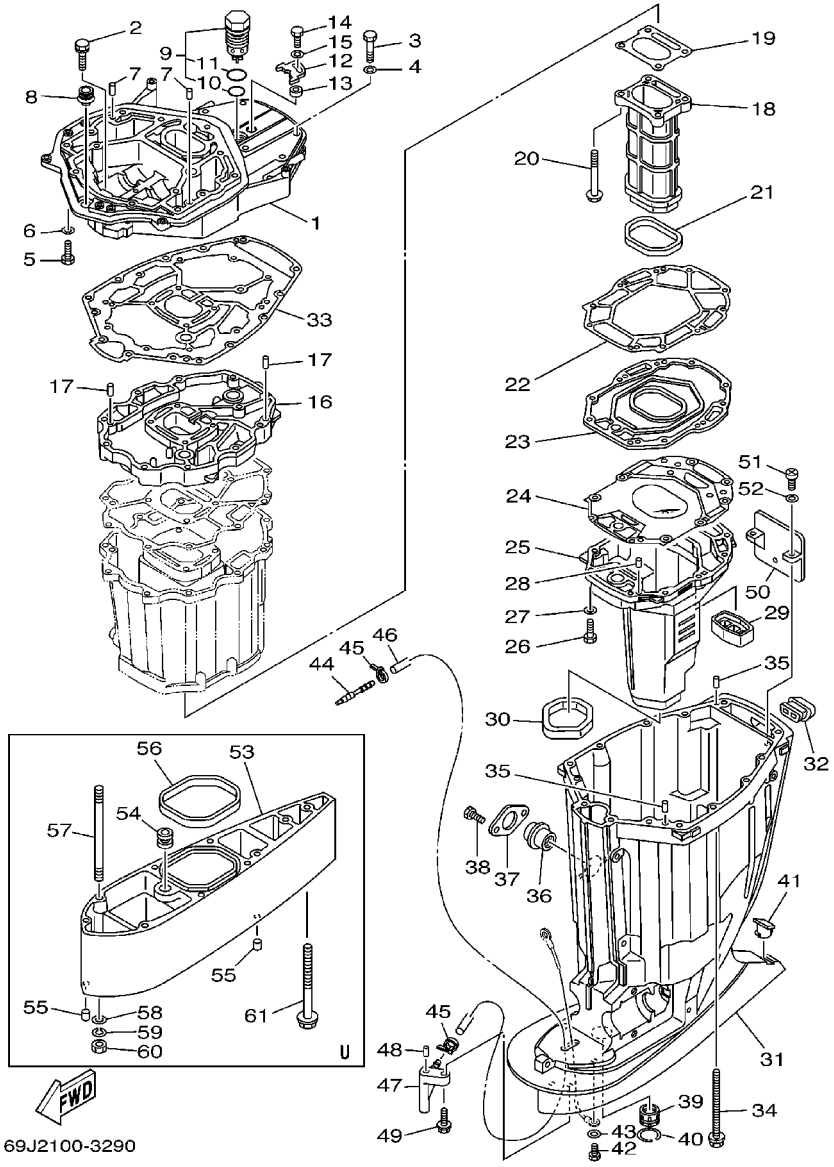

FIG. 29 UPPER CASING

REF. NO.	PART NO.	DESCRIPTION	69J2	60L2	69K2	60M2		REMARKS
1	69J–41137–00–94	GUIDE, EXHAUST	1	1	1	1		
2	90119–08M79	BOLT, WITH WASHER	2	2	2	2		
3	97075–10045	BOLT	7	7	7	7		
4	92995–10600	WASHER	7	7	7	7		
5	97075–10035	BOLT	7	7	7	7		
6	92995–10600	WASHER	7	7	7	7		
7	93608–16M16	PIN, DOWEL	2	2	2	2		
8	6E5–42724–00	GROMMET	1	1	1	1		
9	69J–11371–00	COVER	1	1	1	1		
10	93210–28543	.O–RING	1	1	1	1		
11	93210–33MG4	.O–RING	1	1	1	1		
12	69J–12233–00	PLATE, GUIDE STOPPER 1	1	1	1	1		
13	90387–06037	COLLAR	1	1	1	1		
14	97095–06020	BOLT	1	1	1	1		
15	92995–06600	WASHER	1	1	1	1		
16	69J–41131–00–94	MANIFOLD, EXT. 1	1	1	1	1		
17	93608–16M16	PIN, DOWEL	2	2	2	2		
18	69J–41132–00–5B	MANIFOLD, EXHAUST	1	1	1	1		
19	69J–41134–A0	GASKET, EXHAUST MANIFOLD	1	1	1	1		
20	97575–08590	BOLT, WITH WASHER	4	4	4	4		
21	69J–41138–00	SEAL, EXT. 1	1	1	1	1		
22	69J–41135–A0	GASKET, EXHAUST MANIFOLD	1	1	1	1		
23	69J–45181–00–5B	PLATE	1	1	1	1		
24	69J–41136–A0	GASKET, EXHAUST MANIFOLD 4	1	1	1	1		
25	69J–14711–00–5B	MUFFLER 1	1	1	1	1		
26	97075–08035	BOLT	10	10	10	10		
27	92995–08600	WASHER	10	10	10	10		

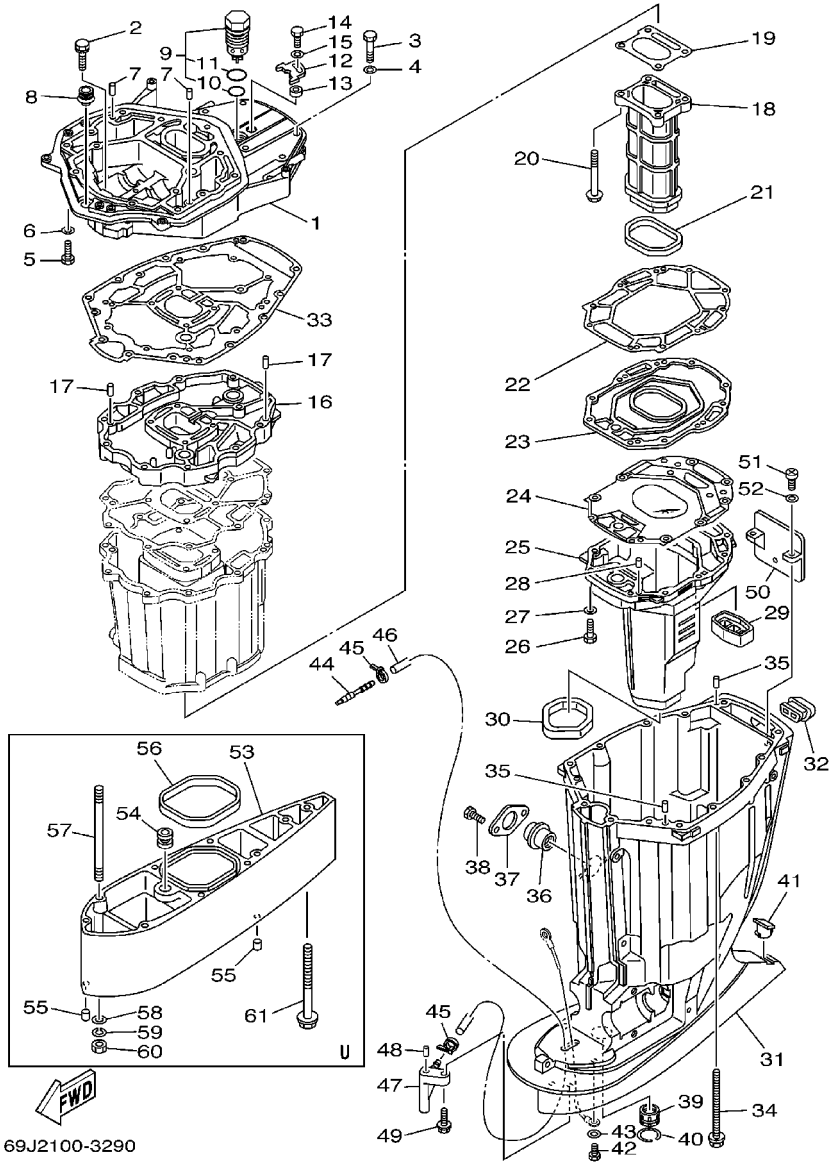

FIG. 29 UPPER CASING

REF. NO.	PART NO.	DESCRIPTION	69J2	60L2	69K2	60M2		REMARKS
28	93606-19M23	PIN, DOWEL	2	2	2	2		
29	69J-45127-00	SEAL	1	1	1	1		
30	69J-45123-00	GASKET, MUFFLER	1	1	1	1		
31	69J-45111-01-8D	CASING, UPPER	1	1	1	1		
32	69J-42769-00	SEAL, RUBBER	1	1	1	1		
33	69J-45113-00	GASKET, UPPER CASING	1	1	1	1		
34	90119-10007	BOLT, WITH WASHER	6	6	6	6		
35	93608-16M16	PIN, DOWEL	2	2	2	2		
36	69J-15316-00	DAMPER, ENGINE MOUNT 1	1	1	1	1		
37	69J-45152-00-8D	COVER, UPPER CASING 2	1	1	1	1		
38	97095-06014	BOLT	2	2	2	2		
39	69J-45318-00	BUSHING, DRIVE SHAFT	1	1	1	1		
40	93420-36M01	CIRCLIP	1	1	1	1		
41	61A-45155-00	CAP	1	1	1	1		
42	97095-06010	BOLT	1	1	1	1		
43	92995-06600	WASHER	1	1	1	1		
44	6E5-83558-00	END, NIPPLE	1	1	1	1		
45	90465-11M10	CLAMP	2	2	2	2		
46	90445-07010	HOSE	1	1	1	1		X
	90445-07012	HOSE	1		1			U
47	61A-45378-00	NIPPLE, HOSE	1	1	1	1		
48	93606-12019	PIN, DOWEL	1	1	1	1		
49	90119-06M17	BOLT, WITH WASHER	1	1	1	1		
50	69J-14624-01	COVER, EXHAUST	1	1	1	1		
51	97880-06016	SCREW, PAN HEAD	2	2	2	2		
52	92990-06600	WASHER, PLATE	2	2	2	2		
53	69J-45211-01-8D	EXTENSION	1		1			U

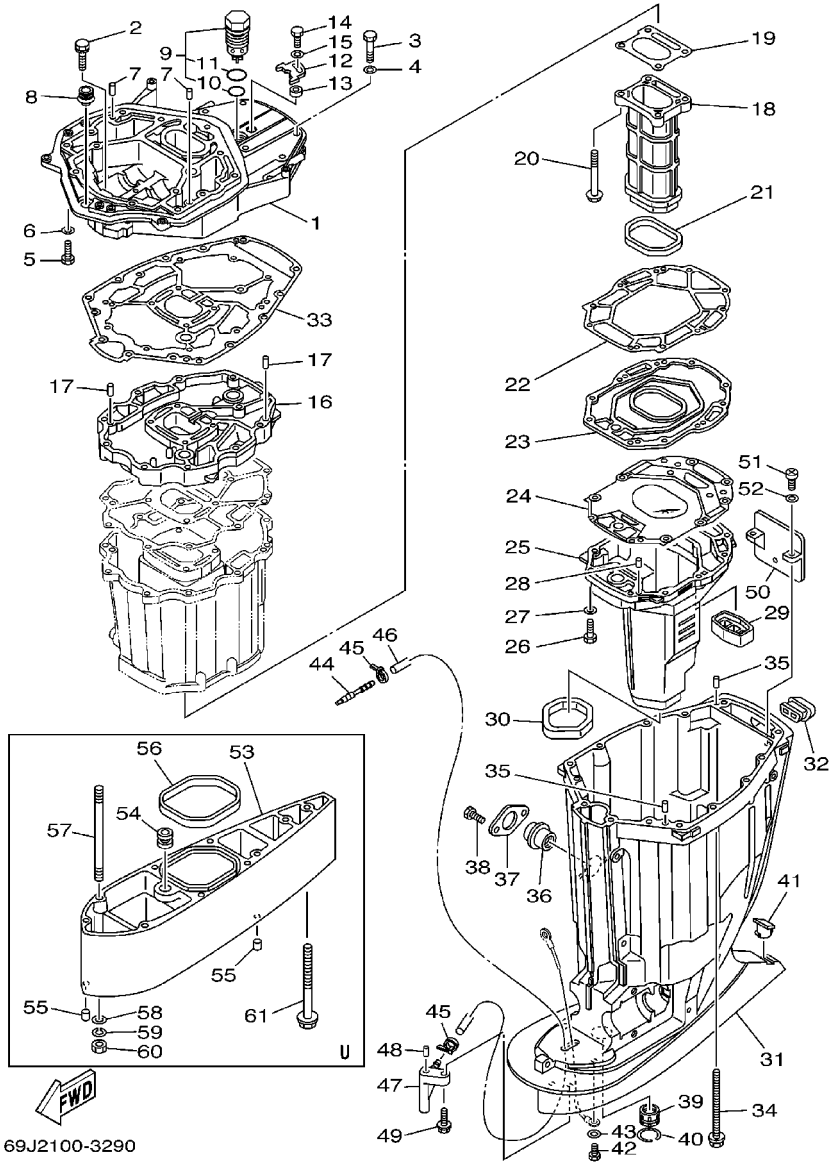

69J2100-3290

FIG. 29 UPPER CASING

REF. NO.	PART NO.	DESCRIPTION	69J2	60L2	69K2	60M2		REMARKS
54	6E5–44366–00	DAMPER, WATER SEAL	1		1			U
55	93608–12M05	PIN, DOWEL	2		2			U
56	69J–45159–00	DAMPER	1		1			U
57	90116–10012	BOLT, STUD	6		6			U
58	92990–10600	WASHER, PLATE	6		6			U
59	92990–10100	WASHER, SPRING	6		6			U
60	95380–10600	NUT	6		6			U
61	90119–10008	BOLT, WITH WASHER	1		1			U

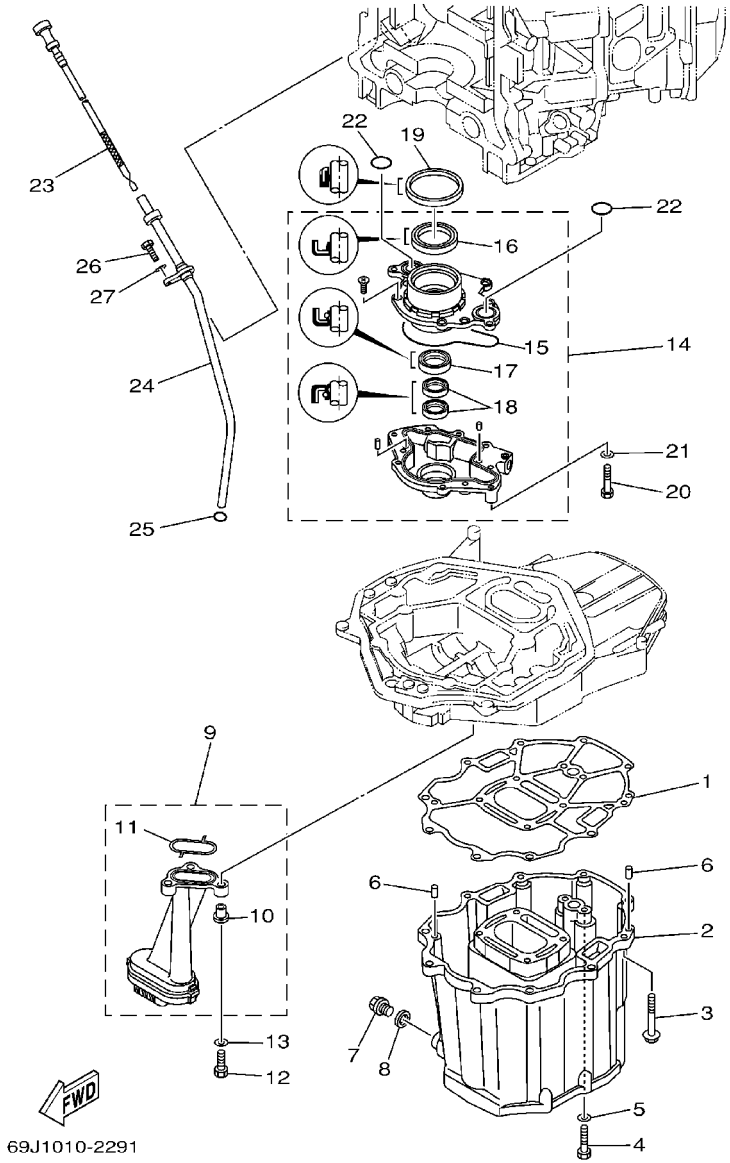

FIG. 30 OIL PAN

REF. NO.	PART NO.	DESCRIPTION	69J2	60L2	69K2	60M2		REMARKS
1	69J–15312–00	GASKET, OIL PAN	1	1	1	1		
2	69J–15311–00–5B	OIL PAN	1	1	1	1		
3	97575–08560	BOLT, WITH WASHER	10	10	10	10		
4	97095–08035	BOLT	2	2	2	2		
5	92995–08600	WASHER	2	2	2	2		
6	93608–16M16	PIN, DOWEL	2	2	2	2		
7	90340–14M06	PLUG, STRAIGHT SCREW	1	1	1	1		
8	90430–14M09	GASKET	1	1	1	1		
9	69J–13411–00	STRAINER, OIL	1	1	1	1		
10	90387–06M64	.COLLAR	3	3	3	3		
11	69J–13415–00	.SEAL, OIL STRAINER	1	1	1	1		
12	97027–06025	BOLT	3	3	3	3		
13	92907–06600	WASHER, PLATE	3	3	3	3		
14	69J–13300–00	OIL PUMP ASSY	1	1	1	1		
15	69J–13329–00	.GASKET, PUMP COVER	1	1	1	1		
16	69J–13338–00	.OIL SEAL	1	1	1	1		
17	69J–13119–00	.OIL SEAL	1	1	1	1		
18	69J–13631–00	.OIL SEAL	2	2	2	2		
19	69J–11355–00	SEAL, CYLINDER 1	1	1	1	1		
20	97095–06040	BOLT	4	4	4	4		
21	92995–06600	WASHER	4	4	4	4		
22	93210–25552	O–RING	2	2	2	2		
23	69J–15362–00	PLUG, OIL LEVEL	1	1	1	1		
24	69J–15377–00	GUIDE, INLET	1	1	1	1		
25	93210–19MJ3	O–RING	1	1	1	1		
26	97095–06020	BOLT	1	1	1	1		
27	92995–06600	WASHER	1	1	1	1		

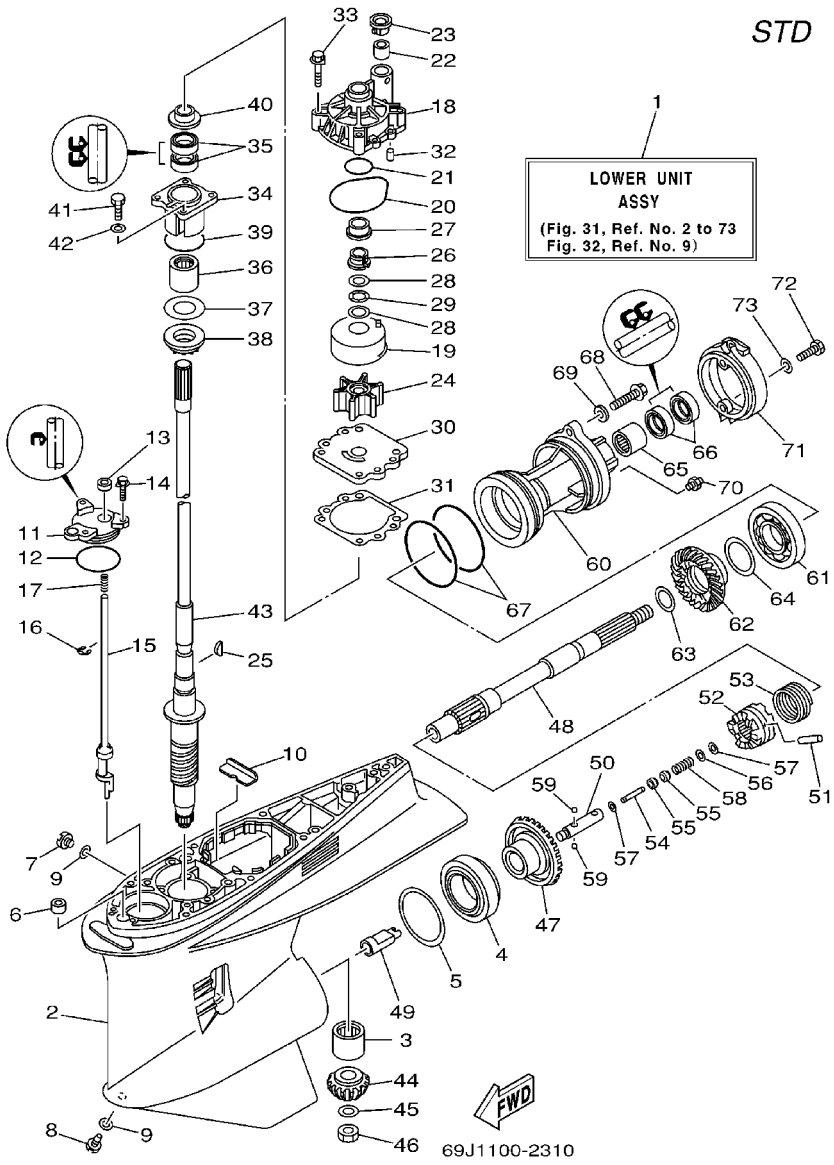

FIG. 31 LOWER CASING. DRIVE 1

REF. NO.	PART NO.	DESCRIPTION	69J2	60L2	69K2	60M2		REMARKS
1	69J–45300–21–8D	LOWER UNIT ASSY	1	1				X
	69J–45300–31–8D	LOWER UNIT ASSY	1					U
2	61A–45301–10–8D	CASING, LOWER	1	1				
3	93311–832V2	BALL BEARING	1	1				
4	93332–000W1	BEARING	1	1				
5	61A–45567–00–10	SHIM (T:0.10MM)	1	1				UR
	61A–45567–00–12	SHIM (T:0.12MM)	1	1				UR
	61A–45567–00–15	SHIM (T:0.15MM)	1	1				UR
	61A–45567–00–18	SHIM (T:0.18MM)	1	1				UR
	61A–45567–00–30	SHIM (T:0.30MM)	1	1				UR
	61A–45567–00–40	SHIM (T:0.40MM)	1	1				UR
	61A–45567–00–50	SHIM (T:0.50MM)	1	1				UR
6	663–44366–00	DAMPER, WATER SEAL	1	1				
7	90340–08002	PLUG, STRAIGHT SCREW	1	1				
8	688–45341–10	PLUG, DRAIN	1	1				
9	90430–08020	GASKET	2	2				
10	61A–45376–00–94	GUIDE, SEAL DAMPER	1	1				
11	61A–45321–01	PLATE	1	1				
12	93210–64488	O–RING	1	1				
13	93106–09014	OIL SEAL	1	1				
14	90119–06M10	BOLT, WITH WASHER	3	3				
15	69J–44150–00	SHIFT CAM ASSY	1	1				
16	99001–08600	CIRCLIP	1	1				
17	90501–11M10	SPRING, COMPRESSION	1	1				
18	61A–44311–01	HOUSING, WATER PUMP	1	1				
19	61A–44322–02	INSERT, CARTRIDGE	1	1				
20	93210–86M38	O–RING	1	1				

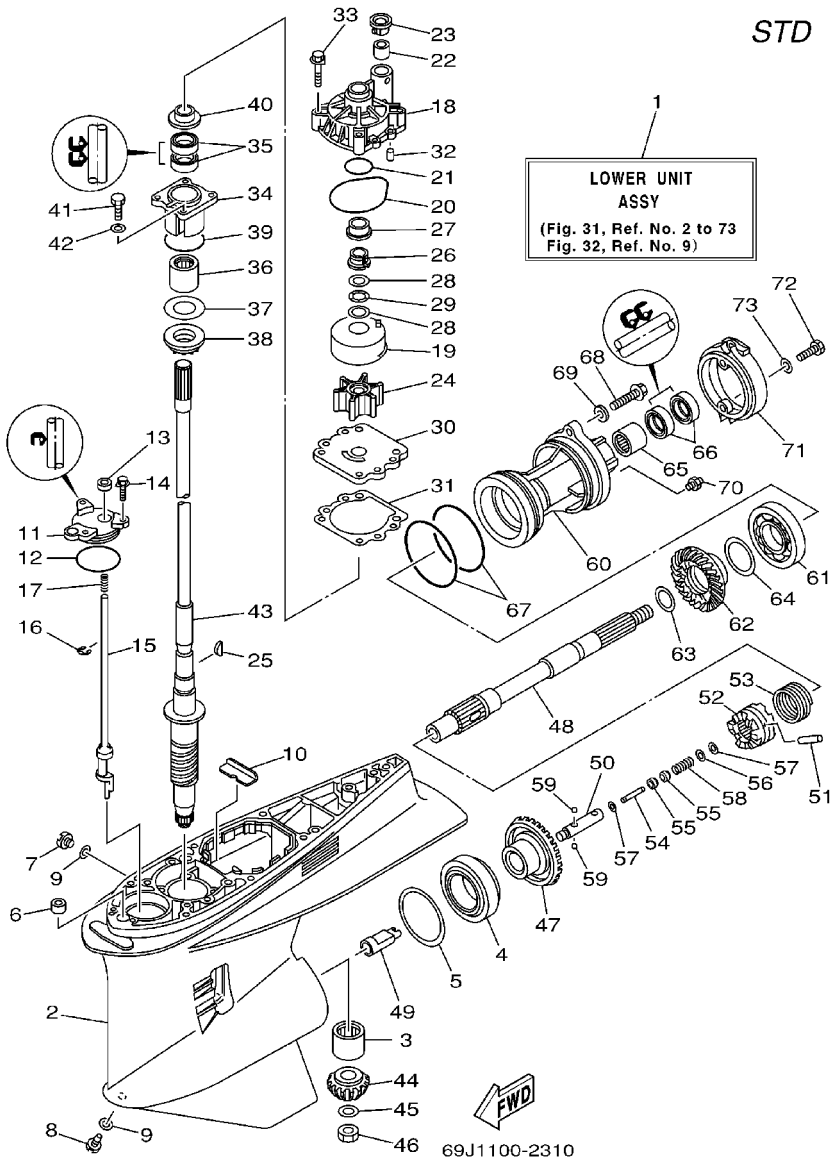

FIG. 31 LOWER CASING. DRIVE 1

REF. NO.	PART NO.	DESCRIPTION	69J2	60L2	69K2	60M2		REMARKS
21	93210–37160	O–RING	1	1				
22	6E5–44365–00	DAMPER, WATER SEAL	1	1				
23	6E5–44312–00	COVER, WATER PUMP HOUSING	1	1				
24	6E5–44352–01	IMPELLER	1	1				
25	90280–04M05	KEY, WOODRUFF	1	1				
26	61A–45538–00	SPACER 1	1	1				
27	61A–45527–00	COLLAR, DRIVE SHAFT	1	1				
28	90201–22M01	WASHER, PLATE	2	2				
29	90206–22M19	WASHER, WAVE	1	1				
30	6G5–44323–00	OUTER PLATE, CARTRIDGE	1	1				
31	6E5–44315–A0	GASKET, WATER PUMP	1	1				
32	93606–12019	PIN, DOWEL	2	2				
33	90119–08M14	BOLT, WITH WASHER	4	4				
34	61A–45331–00–94	HOUSING, BEARING	1	1				
35	93101–28M16	OIL SEAL	2	2				
36	93317–330U2	BEARING	1	1				
37	61A–45587–00–10	SHIM (T:0.10MM)	1	1				UR
	61A–45587–00–12	SHIM (T:0.12MM)	1	1				UR
	61A–45587–00–15	SHIM (T:0.15MM)	1	1				UR
	61A–45587–00–18	SHIM (T:0.18MM)	1	1				UR
	61A–45587–00–30	SHIM (T:0.30MM)	1	1				UR
	61A–45587–00–40	SHIM (T:0.40MM)	1	1				UR
	61A–45587–00–50	SHIM (T:0.50MM)	1	1				UR
38	93341–930U9	BEARING	1	1				
39	93210–55M14	O–RING	1	1				
40	6E5–45344–00	COVER, OIL SEAL	1	1				
41	97095–08025	BOLT	4	4				

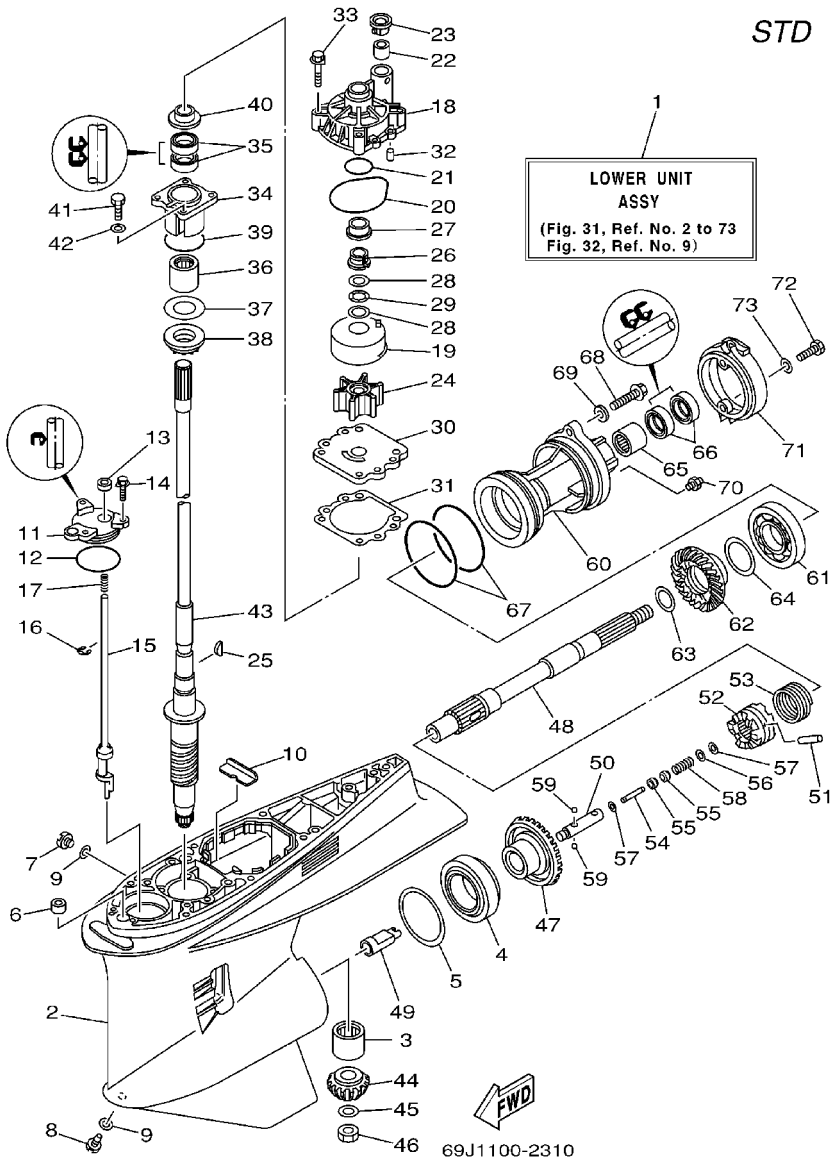

FIG. 31 LOWER CASING. DRIVE 1

REF. NO.	PART NO.	DESCRIPTION	69J2	60L2	69K2	60M2		REMARKS
42	92995–08600	WASHER	4	4				
43	69J–45501–00	DRIVE SHAFT COMP.	1	1				X
	61A–45501–30	DRIVE SHAFT COMP.	1					U
44	69J–45551–00	PINION	1	1				
45	90201–16M00	WASHER, PLATE	1	1				
46	90170–16M19	NUT	1	1				
47	69J–45560–00	GEAR	1	1				
48	69J–45611–00	SHAFT, PROPELLER	1	1				
49	69J–45641–00	SHIFTER	1	1				
50	61A–45634–01	SLIDE, SHIFT	1	1				
51	61A–45632–00	PIN, CROSS	1	1				
52	69J–45631–00	CLUTCH, DOG	1	1				
53	61A–45633–00	RING, CROSS PIN	1	1				
54	6H1–45668–00	SHAFT, FREE	1	1				
55	61A–45635–00	PLUNGER, SHIFT	2	2				
56	90201–02M00	WASHER, PLATE	1	1				
57	90183–02M03	NUT, SPRING	2	2				
58	90501–10M77	SPRING, COMPRESSION	1	1				
59	93501–04011	BALL	2	2				
60	69J–45332–00–94	HOUSING, BEARING	1	1				
61	93306–210U0	BEARING	1	1				
62	69J–45571–00	GEAR	1	1				
63	90201–31M00	WASHER, PLATE	1	1				
64	61A–45577–00–10	SHIM (T:0.10MM)	1	1				UR
	61A–45577–00–12	SHIM (T:0.12MM)	1	1				UR
	61A–45577–00–15	SHIM (T:0.15MM)	1	1				UR
	61A–45577–00–18	SHIM (T:0.18MM)	1	1				UR

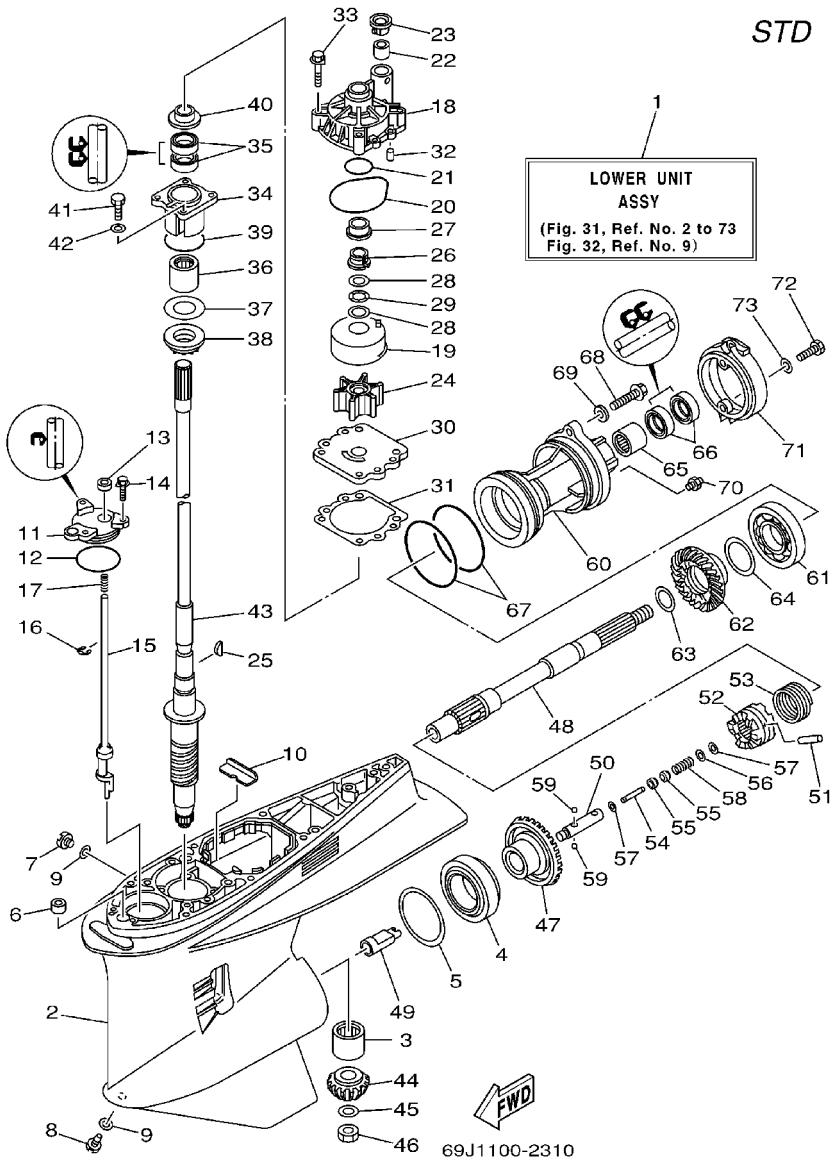

FIG. 31 LOWER CASING. DRIVE 1

REF. NO.	PART NO.	DESCRIPTION	69J2	60L2	69K2	60M2		REMARKS
64	61A–45577–00–30	SHIM (T:0.30MM)	1	1				UR
	61A–45577–00–40	SHIM (T:0.40MM)	1	1				UR
	61A–45577–00–50	SHIM (T:0.50MM)	1	1				UR
65	93315–43061	BEARING	1	1				
66	93101–30M17	OIL SEAL	2	2				
67	93211–04384	O–RING	2	2				
68	90105–08036	BOLT, FLANGE	2	2				
69	90201–08023	WASHER, PLATE	2	2				
70	93700–09M00	NIPPLE, GREASE	1	1				
71	69J–45361–00–8D	CAP, LOWER CASING	1	1				
72	97095–08020	BOLT	2	2				
73	92995–08600	WASHER	2	2				

FIG. 32 LOWER CASING. DRIVE 2

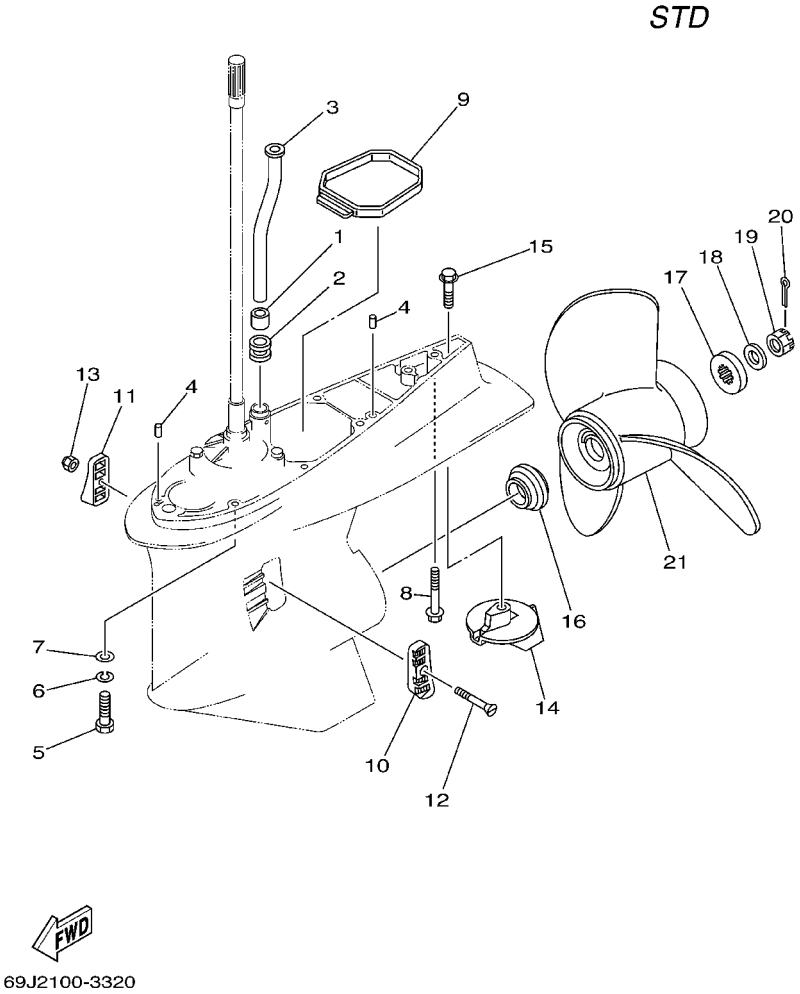

REF. NO.	PART NO.	DESCRIPTION	69J2	60L2	69K2	60M2		REMARKS
1	6E5–44365–00	DAMPER, WATER SEAL	1	1				
2	6E5–44366–00	DAMPER, WATER SEAL	1	1				
3	69J–44361–00	TUBE, WATER	1	1				X
	69J–44361–10	TUBE, WATER	1					U
4	93608–12M05	PIN, DOWEL	2	2				
5	97095–10045	BOLT	7	7				X
6	92995–10100	WASHER	7	7				X
7	92995–10600	WASHER	7	7				X
8	90119–10MA2	BOLT, WITH WASHER	1	1				X
	90119–10009	BOLT, WITH WASHER	1					U
9	69J–45375–00	DAMPER, SEAL	1	1				
10	61A–45214–10	COVER, WATER INLET	1	1				
11	61A–45215–10	COVER, WATER INLET	1	1				
12	90152–05003	SCREW, COUNTERSUNK	1	1				
13	90185–05002	NUT, SELF–LOCKING	1	1				
14	61A–45371–00	TAB–TRIM	1	1				
15	90105–10M00	BOLT, FLANGE	1	1				
16	69J–45987–00	SPACER	1	1				
17	688–45997–01	SPACER	1	1				
18	92990–18200	WASHER	1	1				
19	90171–18M04	NUT, CASTLE	1	1				
20	91490–40030	PIN, COTTER	1	1				
21	6G5–45970–02–98	PROPELLER (3X15–1/4”X15”–M)	1	1				UR
	6G5–45972–02–98	PROPELLER (3X13–3/4”X21”–M)	1	1				UR
	6G5–45974–03–98	PROPELLER (3X13–3/4”X19”–M2)	1	1				UR
	6G5–45978–03–98	PROPELLER (3X13–3/4”X17”–M2)	1	1				UR
	61A–45972–00–98	PROPELLER (3X14–1/2”X21”–T)	1	1				UR

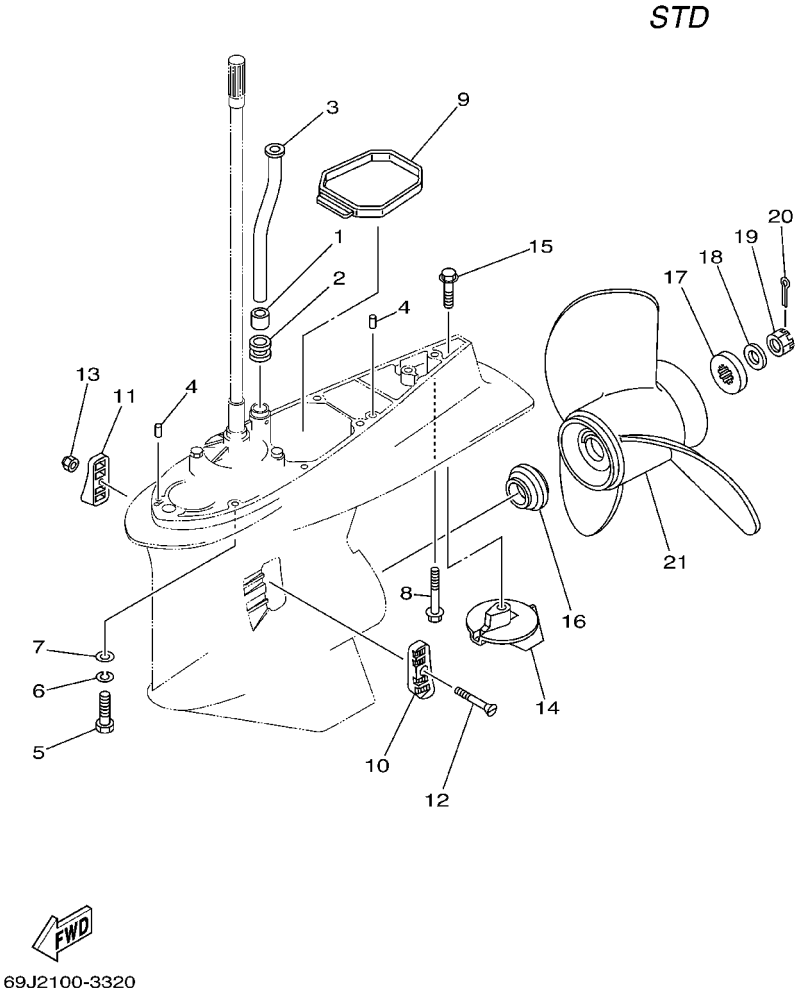

FIG. 32 LOWER CASING. DRIVE 2

REF. NO.	PART NO.	DESCRIPTION	69J2	60L2	69K2	60M2		REMARKS
21	61A–45974–00–98	PROPELLER (3X14–1/2”X19”–T)	1	1				UR
	61A–45978–00–98	PROPELLER (3X15”X17”–T)	1	1				UR
	6R4–45970–A0	PROPELLER (3X15–1/4”X19”–M)	1	1				UR
	6R4–45972–A0	PROPELLER (3X14–7/8”X21”–M)	1	1				UR
	6R4–45974–A0	PROPELLER (3X14–1/2”X23”–M)	1	1				UR
	6R4–45976–A0	PROPELLER (3X14–1/2”X15”–M)	1	1				UR
	6R4–45978–A0	PROPELLER (3X15–1/4”X17”–M)	1	1				UR
	66K–45972–B0	PROPELLER (3X14–1/2”X25”–M2)	1	1				UR

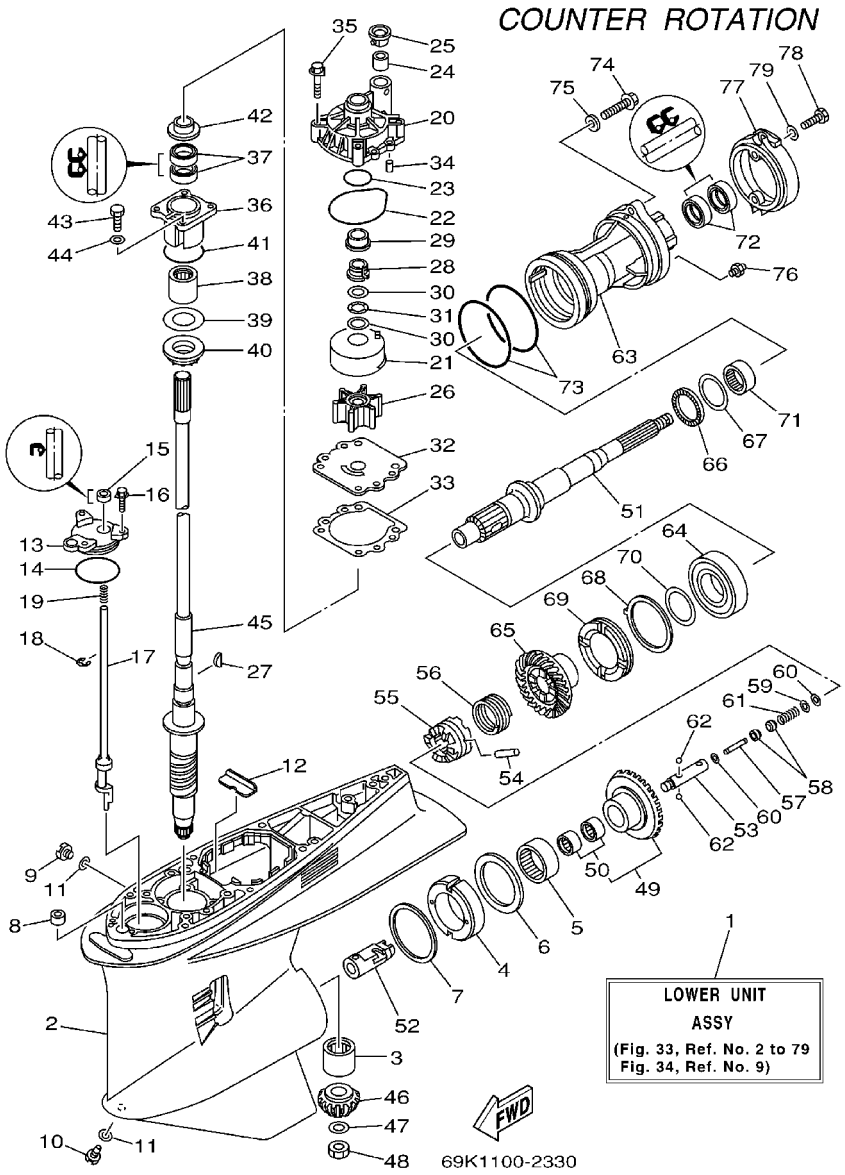

FIG. 33 LOWER CASING. DRIVE 3

REF. NO.	PART NO.	DESCRIPTION	69J2	60L2	69K2	60M2		REMARKS
1	69K–45300–21–8D	LOWER UNIT ASSY			1	1		X
	69K–45300–31–8D	LOWER UNIT ASSY			1			U
2	61A–45301–10–8D	CASING, LOWER			1	1		
3	93311–832V2	BALL BEARING			1	1		
4	61B–45538–01	SPACER 1			1	1		
5	93315–660W3	BEARING			1	1		
6	93341–670V0	BEARING			1	1		
7	61A–45567–00–10	SHIM (T:0.10MM)			1	1		UR
	61A–45567–00–12	SHIM (T:0.12MM)			1	1		UR
	61A–45567–00–15	SHIM (T:0.15MM)			1	1		UR
	61A–45567–00–18	SHIM (T:0.18MM)			1	1		UR
	61A–45567–00–30	SHIM (T:0.30MM)			1	1		UR
	61A–45567–00–40	SHIM (T:0.40MM)			1	1		UR
	61A–45567–00–50	SHIM (T:0.50MM)			1	1		UR
8	663–44366–00	DAMPER, WATER SEAL			1	1		
9	90340–08002	PLUG, STRAIGHT SCREW			1	1		
10	688–45341–10	PLUG, DRAIN			1	1		
11	90430–08020	GASKET			2	2		
12	61A–45376–00–94	GUIDE, SEAL DAMPER			1	1		
13	61A–45321–01	PLATE			1	1		
14	93210–64488	O–RING			1	1		
15	93106–09014	OIL SEAL			1	1		
16	90119–06M10	BOLT, WITH WASHER			3	3		
17	69K–44150–00	SHIFT CAM ASSY			1	1		
18	99001–08600	CIRCLIP			1	1		
19	90501–11M10	SPRING, COMPRESSION			1	1		
20	61A–44311–01	HOUSING, WATER PUMP			1	1		

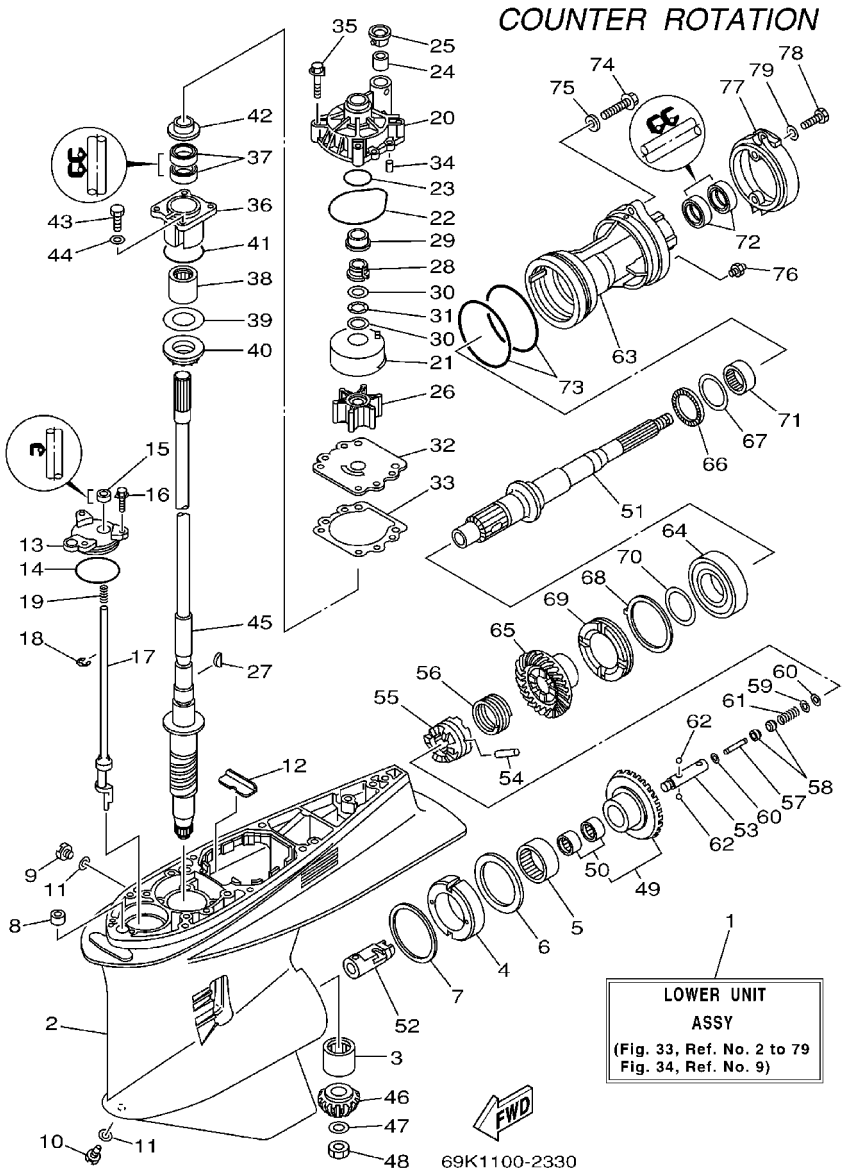

FIG. 33 LOWER CASING. DRIVE 3

REF. NO.	PART NO.	DESCRIPTION	69J2	60L2	69K2	60M2		REMARKS
21	61A–44322–02	INSERT, CARTRIDGE			1	1		
22	93210–86M38	O–RING			1	1		
23	93210–37160	O–RING			1	1		
24	6E5–44365–00	DAMPER, WATER SEAL			1	1		
25	6E5–44312–00	COVER, WATER PUMP HOUSING			1	1		
26	6E5–44352–01	IMPELLER			1	1		
27	90280–04M05	KEY, WOODRUFF			1	1		
28	61A–45538–00	SPACER 1			1	1		
29	61A–45527–00	COLLAR, DRIVE SHAFT			1	1		
30	90201–22M01	WASHER, PLATE			2	2		
31	90206–22M19	WASHER, WAVE			1	1		
32	6G5–44323–00	OUTER PLATE, CARTRIDGE			1	1		
33	6E5–44315–A0	GASKET, WATER PUMP			1	1		
34	93606–12019	PIN, DOWEL			2	2		
35	90119–08M14	BOLT, WITH WASHER			4	4		
36	61A–45331–00–94	HOUSING, BEARING			1	1		
37	93101–28M16	OIL SEAL			2	2		
38	93317–330U2	BEARING			1	1		
39	61A–45587–00–10	SHIM (T:0.10MM)			1	1		UR
	61A–45587–00–12	SHIM (T:0.12MM)			1	1		UR
	61A–45587–00–15	SHIM (T:0.15MM)			1	1		UR
	61A–45587–00–18	SHIM (T:0.18MM)			1	1		UR
	61A–45587–00–30	SHIM (T:0.30MM)			1	1		UR
	61A–45587–00–40	SHIM (T:0.40MM)			1	1		UR
	61A–45587–00–50	SHIM (T:0.50MM)			1	1		UR
40	93341–930U9	BEARING			1	1		
41	93210–55M14	O–RING			1	1		

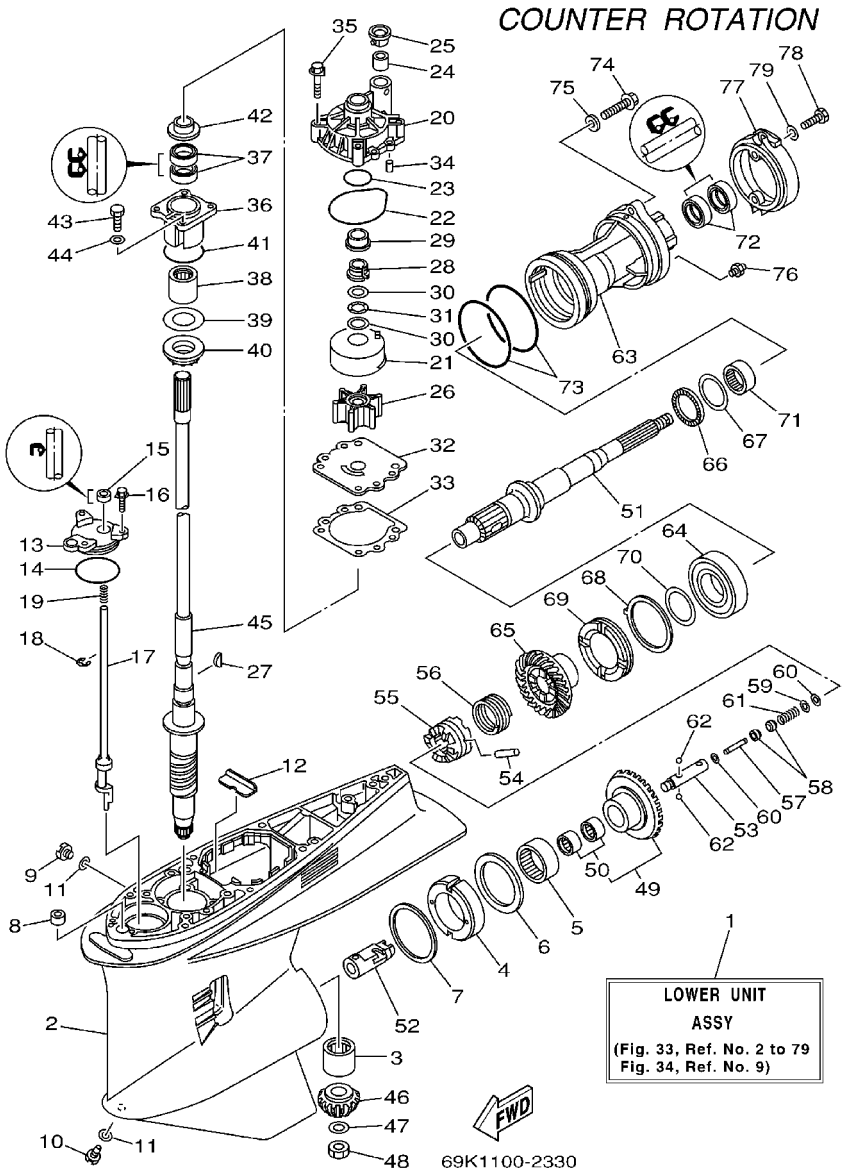

FIG. 33 LOWER CASING. DRIVE 3

REF. NO.	PART NO.	DESCRIPTION	69J2	60L2	69K2	60M2		REMARKS
42	6E5–45344–00	COVER, OIL SEAL			1	1		
43	97095–08025	BOLT			4	4		
44	92995–08600	WASHER			4	4		
45	69J–45501–00	DRIVE SHAFT COMP.			1	1		X
	61A–45501–30	DRIVE SHAFT COMP.			1			U
46	69J–45551–00	PINION			1	1		
47	90201–16M00	WASHER, PLATE			1	1		
48	90170–16M19	NUT			1	1		
49	69K–45560–00	GEAR			1	1		
50	93317–428U7	.BEARING			2	2		
51	69K–45611–00	SHAFT, PROPELLER			1	1		
52	69K–45641–00	SHIFTER			1	1		
53	61A–45634–01	SLIDE, SHIFT			1	1		
54	61A–45632–00	PIN, CROSS			1	1		
55	69J–45631–00	CLUTCH, DOG			1	1		
56	61A–45633–00	RING, CROSS PIN			1	1		
57	6H1–45668–00	SHAFT, FREE			1	1		
58	61A–45635–00	PLUNGER, SHIFT			2	2		
59	90201–02M00	WASHER, PLATE			1	1		
60	90183–02M03	NUT, SPRING			2	2		
61	90501–10M77	SPRING, COMPRESSION			1	1		
62	93501–04011	BALL			2	2		
63	69K–45332–00–94	HOUSING, BEARING			1	1		
64	93332–00048	BEARING			1	1		
65	69K–45571–00	GEAR			1	1		
66	93341–440U5	BEARING			1	1		
67	6K1–45578–01–10	SHIM (T:0.10MM)			1	1		UR

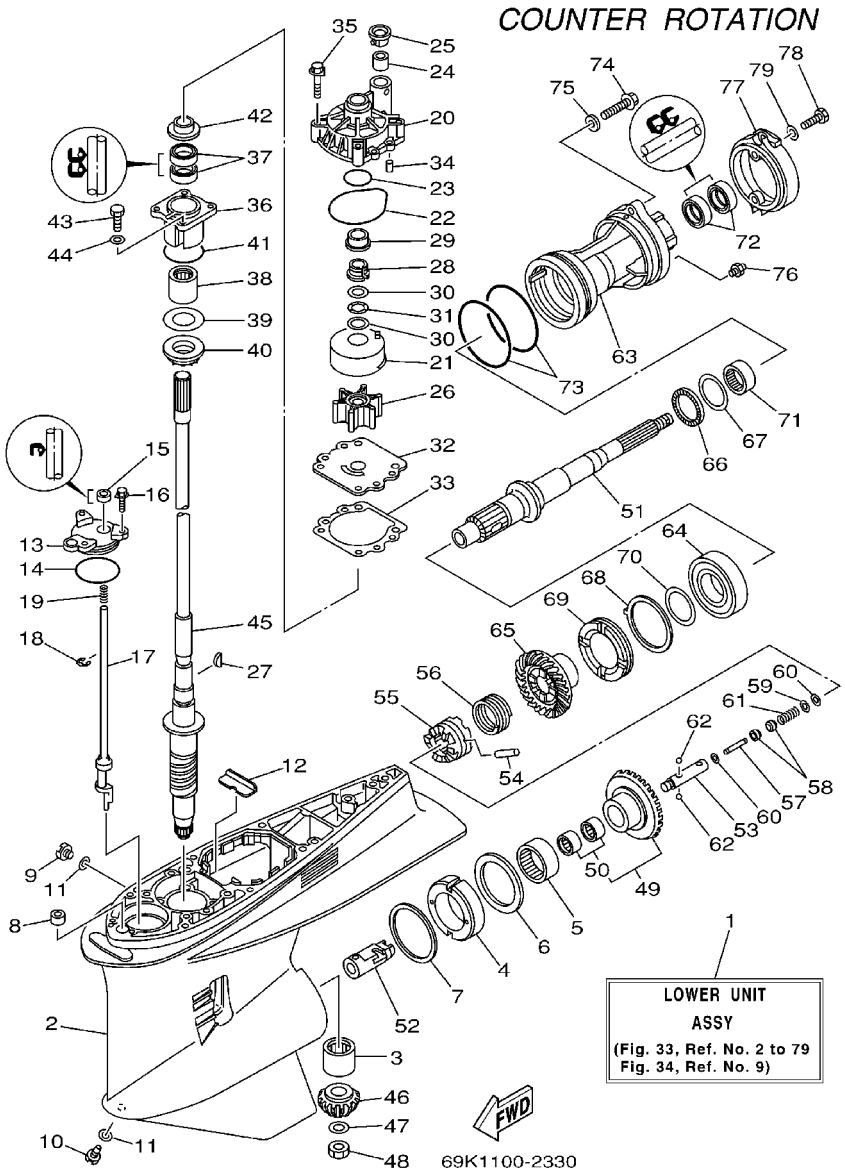

FIG. 33 LOWER CASING. DRIVE 3

REF. NO.	PART NO.	DESCRIPTION	69J2	60L2	69K2	60M2		REMARKS
67	6K1-45578-01-12	SHIM (T:0.12MM)			1	1		UR
	6K1-45578-01-15	SHIM (T:0.15MM)			1	1		UR
	6K1-45578-01-18	SHIM (T:0.18MM)			1	1		UR
	6K1-45578-01-30	SHIM (T:0.30MM)			1	1		UR
	6K1-45578-01-40	SHIM (T:0.40MM)			1	1		UR
	6K1-45578-01-50	SHIM (T:0.50MM)			1	1		UR
68	61B-45383-00	WASHER, CLAW			1	1		
69	69K-45384-00	NUT			1	1		
70	69K-45577-00	SHIM (T:0.10MM)			1	1		UR
	69K-45577-10	SHIM (T:0.12MM)			1	1		UR
	69K-45577-20	SHIM (T:0.15MM)			1	1		UR
	69K-45577-30	SHIM (T:0.18MM)			1	1		UR
	69K-45577-40	SHIM (T:0.30MM)			1	1		UR
	69K-45577-50	SHIM (T:0.40MM)			1	1		UR
	69K-45577-60	SHIM (T:0.50MM)			1	1		UR
71	93315-43061	BEARING			1	1		
72	93101-30M17	OIL SEAL			2	2		
73	93211-04384	O-RING			2	2		
74	90105-08036	BOLT, FLANGE			2	2		
75	90201-08023	WASHER, PLATE			2	2		
76	93700-09M00	NIPPLE, GREASE			1	1		
77	69J-45361-00-8D	CAP, LOWER CASING			1	1		
78	97095-08020	BOLT			2	2		
79	92995-08600	WASHER			2	2		

FIG. 34 LOWER CASING. DRIVE 4

COUNTER ROTATION

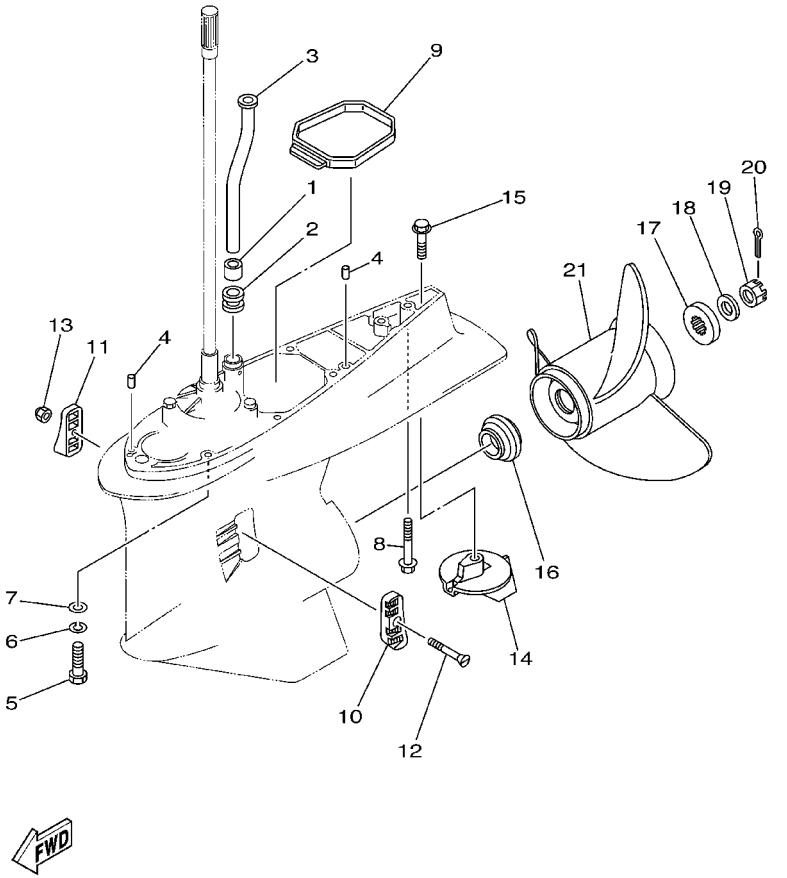

69K2100-3340

REF. NO.	PART NO.	DESCRIPTION	69J2	60L2	69K2	60M2		REMARKS
1	6E5–44365–00	DAMPER, WATER SEAL			1	1		
2	6E5–44366–00	DAMPER, WATER SEAL			1	1		
3	69J–44361–00	TUBE, WATER			1	1		X
	69J–44361–10	TUBE, WATER			1			U
4	93608–12M05	PIN, DOWEL			2	2		
5	97095–10045	BOLT			7	7		X
6	92995–10100	WASHER			7	7		X
7	92995–10600	WASHER			7	7		X
8	90119–10MA2	BOLT, WITH WASHER			1	1		X
	90119–10009	BOLT, WITH WASHER			1			U
9	69J–45375–00	DAMPER, SEAL			1	1		
10	61A–45214–10	COVER, WATER INLET			1	1		
11	61A–45215–10	COVER, WATER INLET			1	1		
12	90152–05003	SCREW, COUNTERSUNK			1	1		
13	90185–05002	NUT, SELF–LOCKING			1	1		
14	61A–45371–00	TAB–TRIM			1	1		
15	90105–10M00	BOLT, FLANGE			1	1		
16	69J–45987–00	SPACER			1	1		
17	688–45997–01	SPACER			1	1		
18	92990–18200	WASHER			1	1		
19	90171–18M04	NUT, CASTLE			1	1		
20	91490–40030	PIN, COTTER			1	1		
21	6K1–45970–01–98	PROPELLER (3X15–1/4”X15”–ML)			1	1		UR
	6K1–45972–01–98	PROPELLER (3X13–3/4”X21”–ML)			1	1		UR
	6K1–45974–02–98	PROPELLER (3X13–3/4”X19”–ML1)			1	1		UR
	6K1–45978–02–98	PROPELLER (3X13–3/4”X17”–ML1)			1	1		UR
	61B–45972–00–98	PROPELLER (3X14–1/2”X21”–TL)			1	1		UR

FIG. 34 LOWER CASING. DRIVE 4

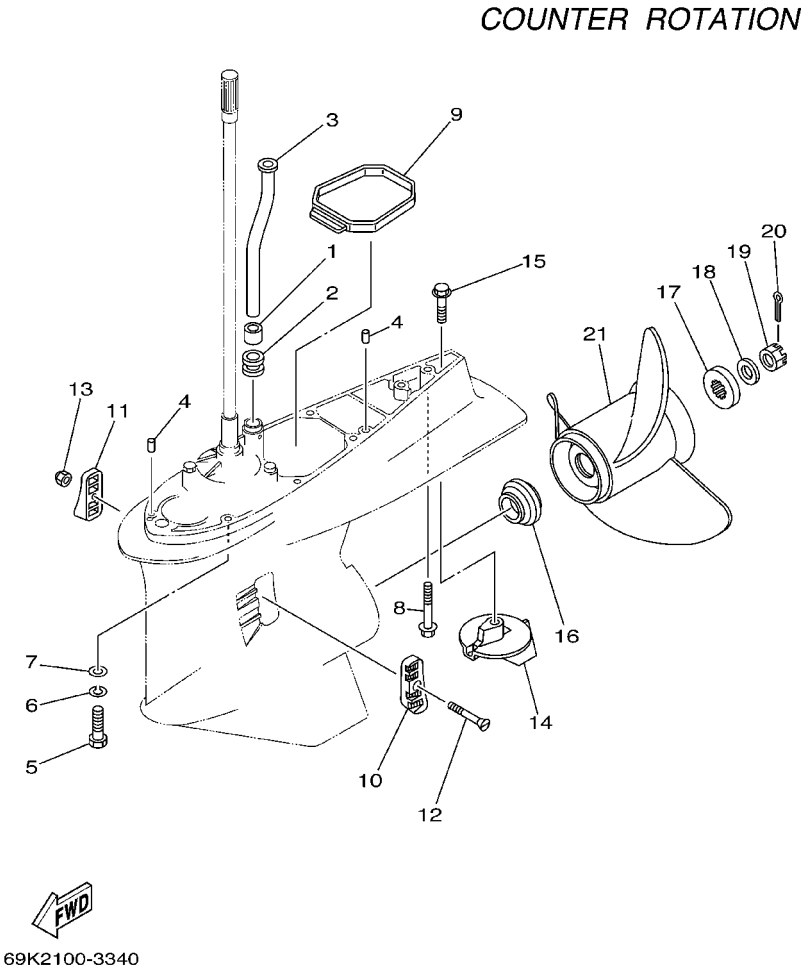

REF. NO.	PART NO.	DESCRIPTION	69J2	60L2	69K2	60M2		REMARKS
21	61B–45974–00–98	PROPELLER (3X14–1/2”X19”–TL)			1	1		UR
	61B–45978–00–98	PROPELLER (3X15”X17”–TL)			1	1		UR
	6R1–45970–A0	PROPELLER (3X15–1/4”X19”–ML)			1	1		UR
	6R1–45972–A0	PROPELLER (3X14–7/8”X21”–ML)			1	1		UR
	6R1–45974–A0	PROPELLER (3X14–1/2”X23”–ML)			1	1		UR
	6R1–45976–A0	PROPELLER (3X15–1/4”X15”–ML)			1	1		UR
	6R1–45978–A0	PROPELLER (3X15–1/4”X17”–ML)			1	1		UR

FIG. 35 STEERING GUIDE ATTACHMENT 1

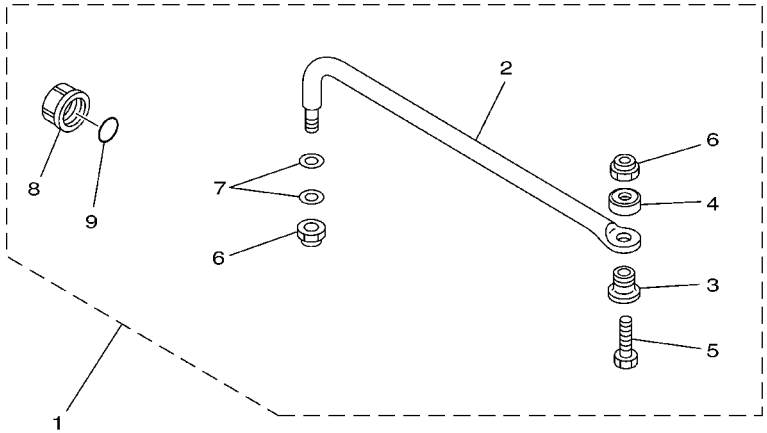

67H0100-9290

REF. NO.	PART NO.	DESCRIPTION	69J2	60L2	69K2	60M2		REMARKS
1	6E5–61350–02	STEERING GUIDE ATTACHMENT KIT	1	1				AP
2	6E5–61351–01	.ROD, STEERING LINK	1	1				
3	90387–10M61	.COLLAR	1	1				
4	90560–12M01	.SPACER	1	1				
5	6E5–61355–00	.BOLT	1	1				
6	90185–09M01	.NUT, SELF–LOCKING	2	2				
7	90201–10M20	.WASHER, PLATE	2	2				
8	6E5–43145–01	.CAP, CLAMP BRACKET	1	1				
9	93210–16275	.O–RING	1	1				

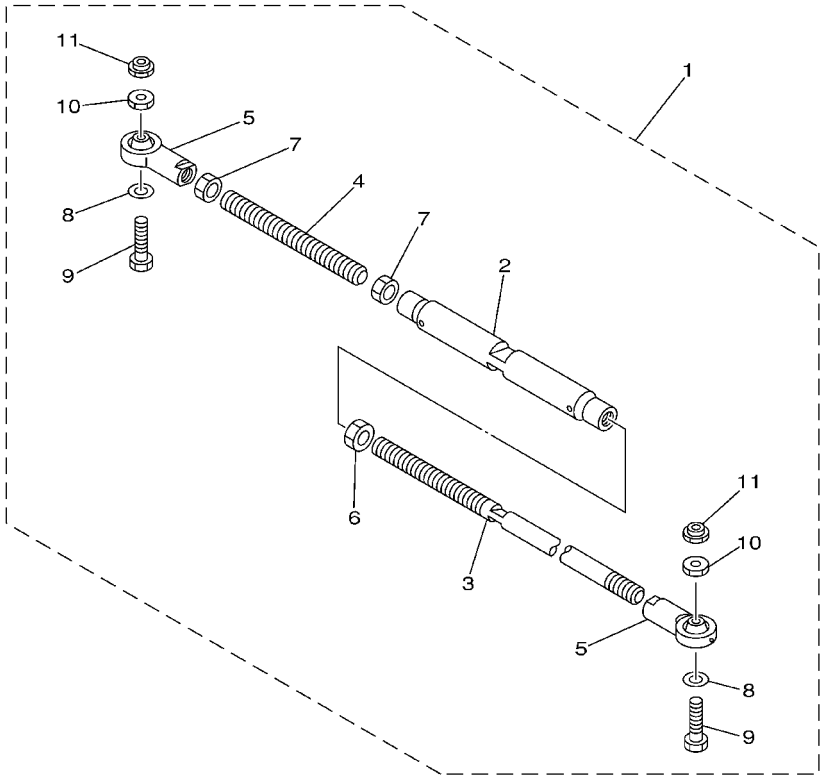

67H0100-0300

FIG. 36 STEERING GUIDE ATTACHMENT 2

REF. NO.	PART NO.	DESCRIPTION	69J2	60L2	69K2	60M2		REMARKS
1	6E5–61301–01	TWIN KIT (L:600–800MM)			1	1		AP
2	6E5–61313–00	.ADJUSTER			1	1		
3	6E5–61311–11	.TIE BAR			1	1		
4	6E5–61315–00	.TIE BAR			1	1		
5	6E5–61303–00	.STEERING EYE COMP.			2	2		
6	90170–14M06	.NUT			1	1		
7	95380–14700	.NUT			2	2		
8	90201–10M76	.WASHER, PLATE			2	2		
9	90101–09M70	.BOLT			2	2		
10	90170–09M05	.NUT			2	2		
11	90185–09M01	.NUT, SELF–LOCKING			2	2		

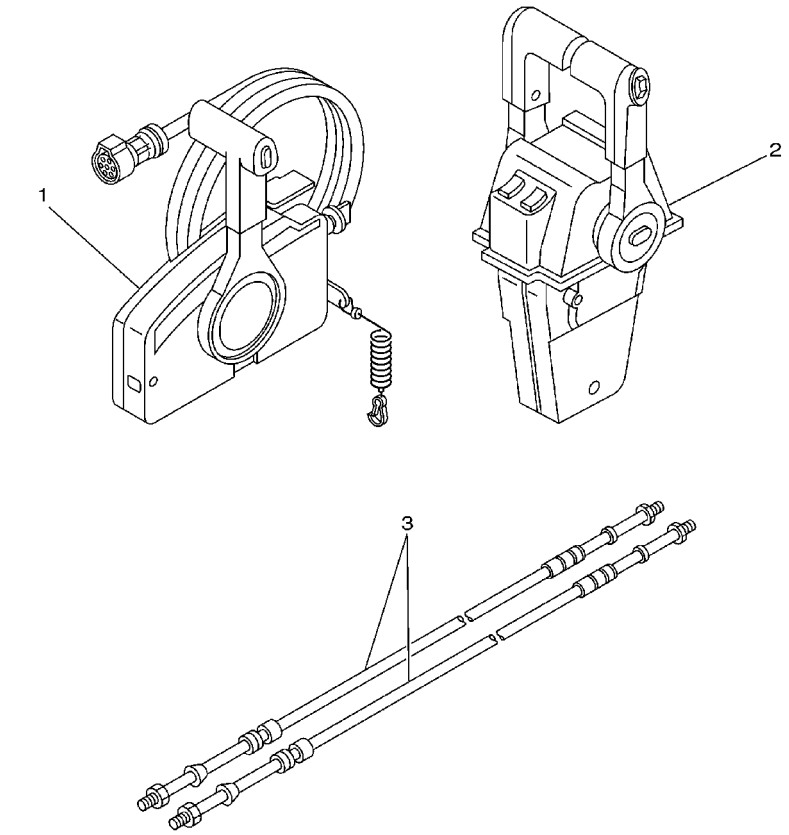

FIG. 37 REMOTE CONTROL BOX

REF. NO.	PART NO.	DESCRIPTION	69J2	60L2	69K2	60M2		REMARKS
1	703–48205–17	REMOTE CONTROL ASSY	1	1				AP WITH PT/T SW.
2	704–48207–23	REMOTE CONTROL ASSY			1	1		AP WITH PT/T SW.
	704–48205–14	REMOTE CONTROL ASSY	1	1				AP FOR CARIB WITH PT/T SW.
3	701–48320–50	CABLE, REMOTE CONTROL L=15F	2	2	2	2		UR
	701–48320–60	CABLE, REMOTE CONTROL L=16F	2	2	2	2		UR
	701–48320–80	CABLE, REMOTE CONTROL L=17F	2	2	2	2		UR
	701–48320–40	CABLE, REMOTE CONTROL L=19F	2	2	2	2		UR
	701–48350–20	CABLE, REMOTE CONTROL L=23F	2	2	2	2		UR

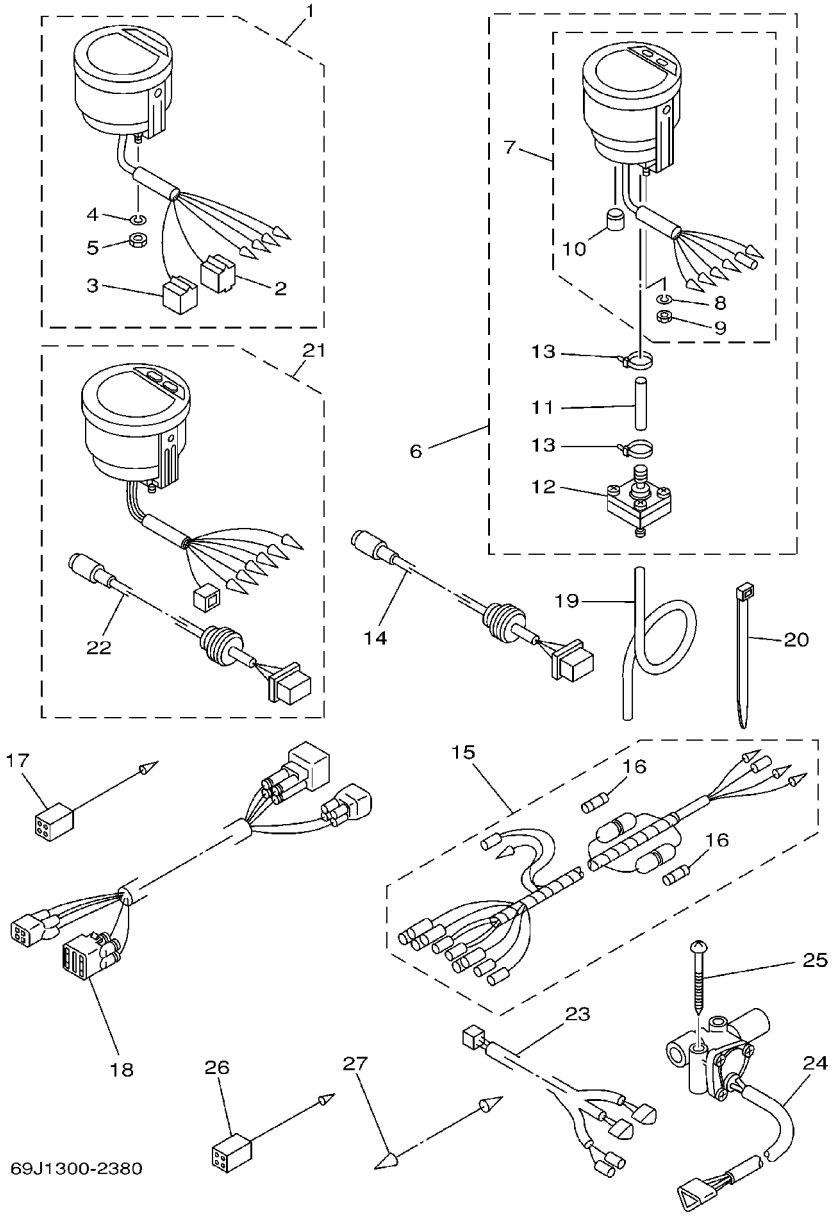

FIG. 38 METER

REF. NO.	PART NO.	DESCRIPTION	69J2	60L2	69K2	60M2		REMARKS
1	6Y5–8350T–80	DIGITAL TACHOMETER ASSY	1	1	1	1		AP FOR USA,CANADA
	6Y5–8350T–01	DIGITAL TACHOMETER ASSY	1	1	1	1		AP FOR OCEANIA, CARIB
2	9E450–04433	.CONNECTOR	1	1	1	1		M–4–W
3	9E450–04533	.CONNECTOR	1	1	1	1		F–4–W
4	92990–04100	.WASHER, SPRING	2	2	2	2		
5	95380–04600	.NUT	2	2	2	2		
6	6Y5–83500–S5	DIGITAL SPEEDOMETER ASSY	1	1				AP
7	6Y5–83570–S5	.SPEEDOMETER ASSY	1	1				
8	92990–04100	..WASHER, SPRING	2	2				
9	95380–04600	..NUT	2	2				
10	6Y5–83533–T2	..GROMMET	1	1				
11	6Y5–83557–31	.TUBE	1	1				
12	6Y5–83728–00	.CONNECTOR ASSY	1	1				
13	90465–11M10	.CLAMP	2	2				
14	6Y5–87122–S0	CORD ASSY 1	1	1				AP
15	6Y5–83553–M0	WIRE, LEAD	1	1				AP
	6Y5–83553–00	WIRE, LEAD			1	1		AP
16	1E6–82151–00	.FUSE (10A)	2	2				FOR 6Y5–83553–M0
	1E6–82151–00	.FUSE (10A)			1	1		FOR 6Y5–83553–00
17	6Y5–82117–00	WIRE, LEAD (BLACK)	1	1				AP
18	68F–82553–80	EXTENSION, WIRE LEAD	1	1				AP
	68F–82553–90	EXTENSION, WIRE LEAD			1	1		AP
19	6Y5–83557–10	TUBE (8M)	1	1				AP
20	90465–11M10	CLAMP	2	2				AP
21	6Y5–8350F–00	FUEL MANAGEMENT METER			1	1		AP
22	6Y5–87122–S0	.CORD ASSY 1			1	1		
23	6Y5–83553–F1	WIRE, LEAD			1	1		AP

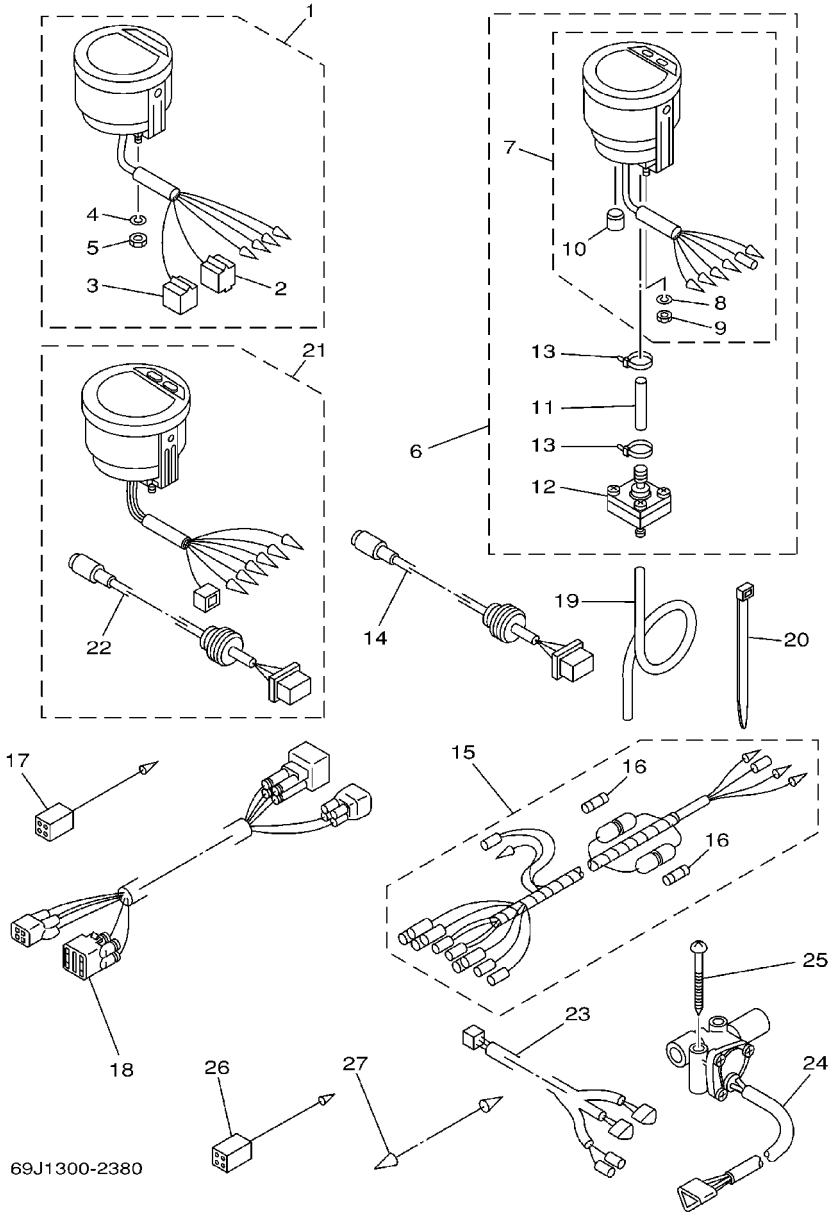

FIG. 38 METER

REF. NO.	PART NO.	DESCRIPTION	69J2	60L2	69K2	60M2		REMARKS
24	6Y5–85752–01	SENDER UNIT ASSY, FUEL METER			2	2		AP
25	90158–06002	SCREW, WOOD			4	4		AP
26	6Y5–82117–00	WIRE, LEAD (BLACK)			1	1		AP
27	703–82531–00	WIRE, LEAD			1	1		AP

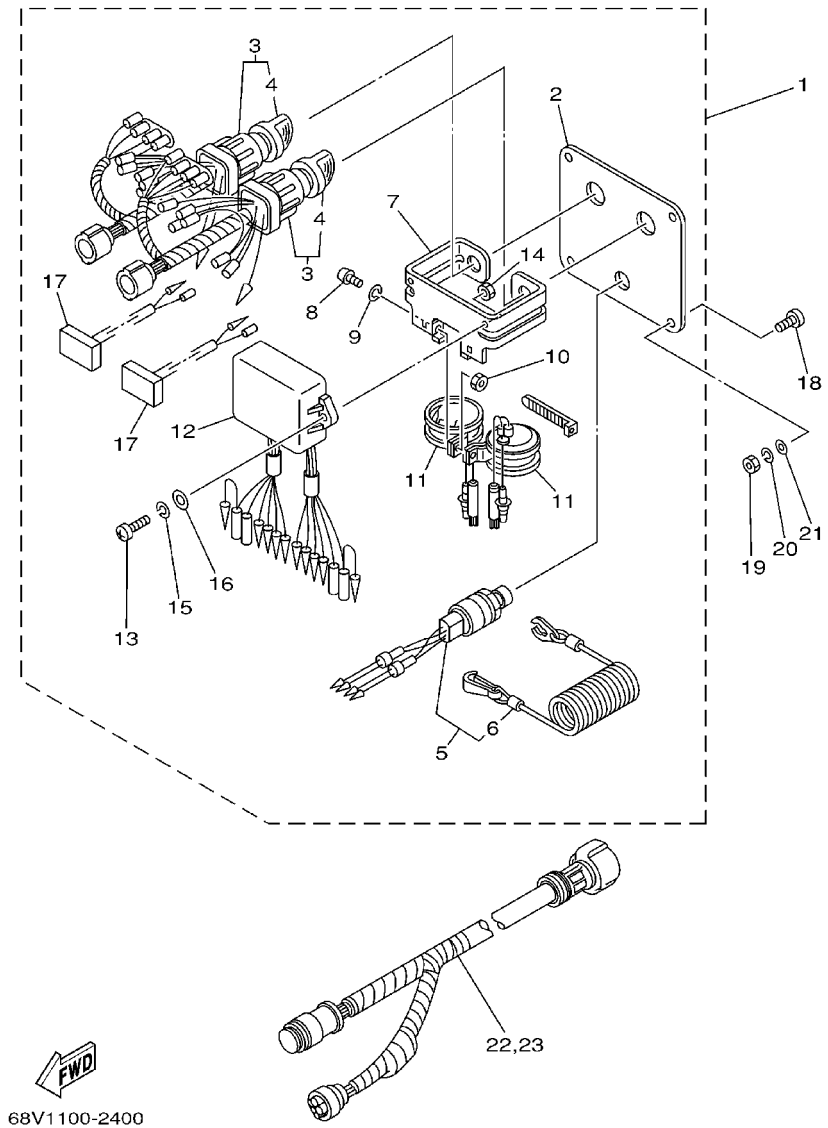

FIG. 39 SWITCH. PANEL 1

REF. NO.	PART NO.	DESCRIPTION	69J2	60L2	69K2	60M2		REMARKS
1	6K1–82570–07	PANEL SWITCH ASSY			1	1		AP
2	6K1–82571–01	.PANEL, SWITCH			1	1		
3	6K1–82510–06	.MAIN SWITCH ASSY			2	2		
4	703–82577–00	..CAP, KEY			1	1		
5	6K1–82575–00	.ENGINE STOP SWITCH ASSY			1	1		
6	682–82556–00	..STOPPER			1	1		
7	6K1–83614–01	.BRACKET			1	1		
8	98980–05010	.SCREW, BIND			2	2		
9	92990–05100	.WASHER, SPRING			2	2		
10	95380–05600	.NUT			2	2		
11	688–83383–11	.BUZZER			2	2		
12	6K1–85830–01	.CONTROL UNIT ASSY			1	1		
13	98980–06020	.SCREW, BIND			2	2		
14	95380–06600	.NUT, HEXAGON			2	2		
15	92990–06100	.WASHER, SPRING			2	2		
16	92990–06600	.WASHER, PLATE			2	2		
17	6K1–81980–00	.DIODE ASSY			2	2		
18	90149–05M05	SCREW			4	4		AP
19	95380–05600	NUT			4	4		AP
20	92990–05100	WASHER, SPRING			4	4		AP
21	92990–05600	WASHER, PLATE			4	4		AP
22	6K1–8258A–40	EXTENSION, WIRE HARNESS			1	1		AP
23	61B–8258A–01	EXTENSION, WIRE HARNESS			1	1		AP

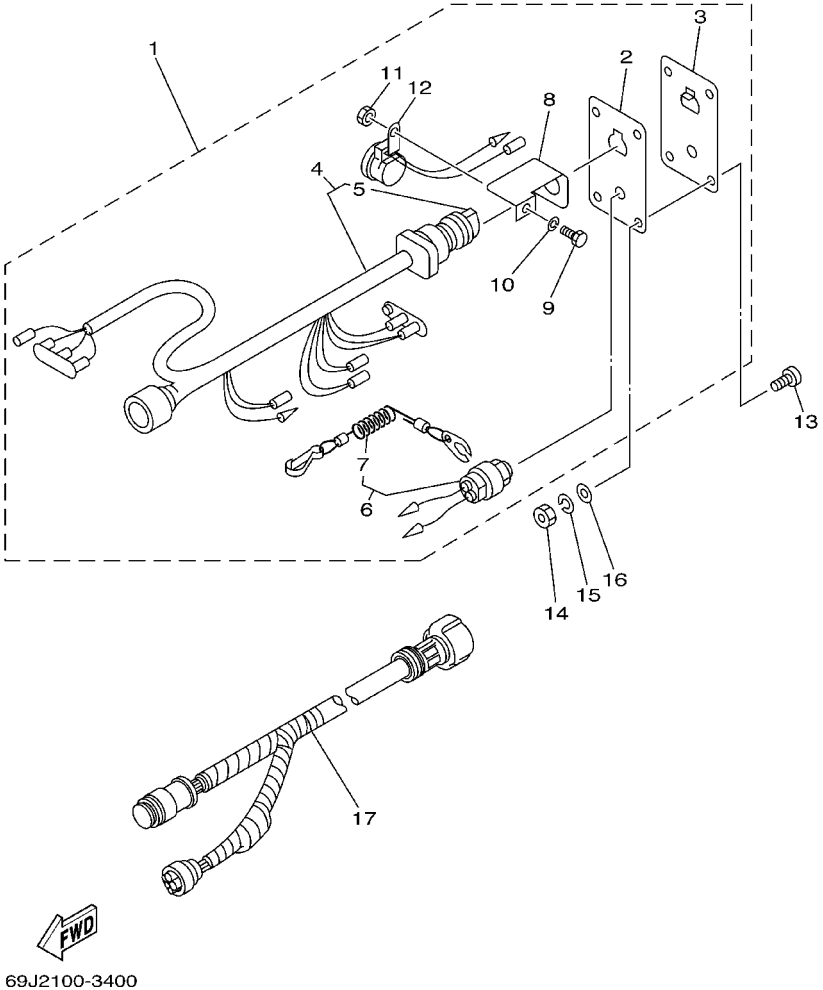

FIG. 40 SWITCH. PANEL 2

REF. NO.	PART NO.	DESCRIPTION	69J2	60L2	69K2	60M2		REMARKS
1	6R5–82570–04	PANEL SWITCH ASSY	1	1				AP FOR CARIB
2	6R5–82588–01	.PLATE	1	1				
3	6R5–82571–01	.PANEL, SWITCH	1	1				
4	6R5–82510–02	.MAIN SWITCH ASSY	1	1				
5	676–82577–00	..CAP, KEY	1	1				
6	688–82575–01	.ENGINE STOP SWITCH ASSY	1	1				
7	682–82556–00	..STOPPER	1	1				
8	64D–82581–00	.STAY, CORD CLAMP	1	1				
9	97303–05012	.BOLT	1	1				
10	92903–05100	.WASHER, SPRING	1	1				
11	95303–05700	.NUT	1	1				
12	6R5–83383–00	.BUZZER	1	1				
13	90149–05M05	SCREW	4	4				AP FOR CARIB
14	95303–05600	NUT	4	4				AP FOR CARIB
15	92903–05100	WASHER, SPRING	4	4				AP FOR CARIB
16	92903–05600	WASHER, PLATE	4	4				AP FOR CARIB
17	6K1–8258A–40	EXTENSION, WIRE HARNESS	1	1				AP FOR CARIB

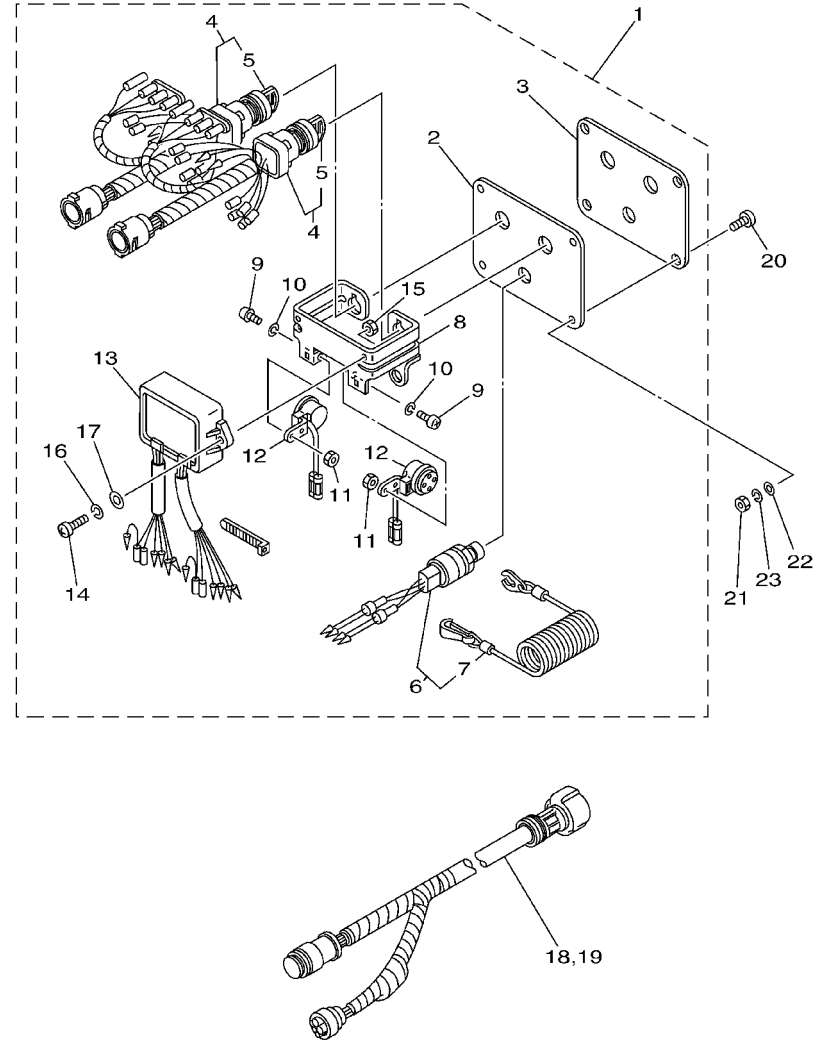

67H1100-2360

FIG. 41 SWITCH. PANEL 3

REF. NO.	PART NO.	DESCRIPTION	69J2	60L2	69K2	60M2		REMARKS
1	61B–82570–02	PANEL SWITCH ASSY			1	1		AP FOR CARIB
2	61B–82588–01	.PLATE			1	1		
3	61B–82551–01	.STOP SWITCH ASSY			1	1		
4	61B–82510–01	.MAIN SWITCH ASSY			2	2		
5	676–82577–00	..CAP, KEY			1	1		
6	6K1–82575–00	.ENGINE STOP SWITCH ASSY			1	1		
7	682–82556–00	..STOPPER			1	1		
8	6K1–83614–01	.BRACKET			1	1		
9	98980–05010	.SCREW, BIND			2	2		
10	92990–05100	.WASHER, SPRING			2	2		
11	95380–05600	.NUT			2	2		
12	6R5–83383–00	.BUZZER			2	2		
13	61B–85830–00	.CONTROL UNIT ASSY			1	1		
14	98980–06020	.SCREW, BIND			2	2		
15	95380–06600	.NUT, HEXAGON			2	2		
16	92990–06100	.WASHER, SPRING			2	2		
17	92990–06600	.WASHER, PLATE			2	2		
18	6K1–8258A–40	EXTENSION, WIRE HARNESS			1	1		AP FOR CARIB
19	61B–8258A–01	EXTENSION, WIRE HARNESS			1	1		AP FOR CARIB
20	90149–05M05	SCREW			4	4		AP FOR CARIB
21	95380–05600	NUT			4	4		AP FOR CARIB
22	92990–05600	WASHER, PLATE			4	4		AP FOR CARIB
23	92990–05100	WASHER, SPRING			4	4		AP FOR CARIB

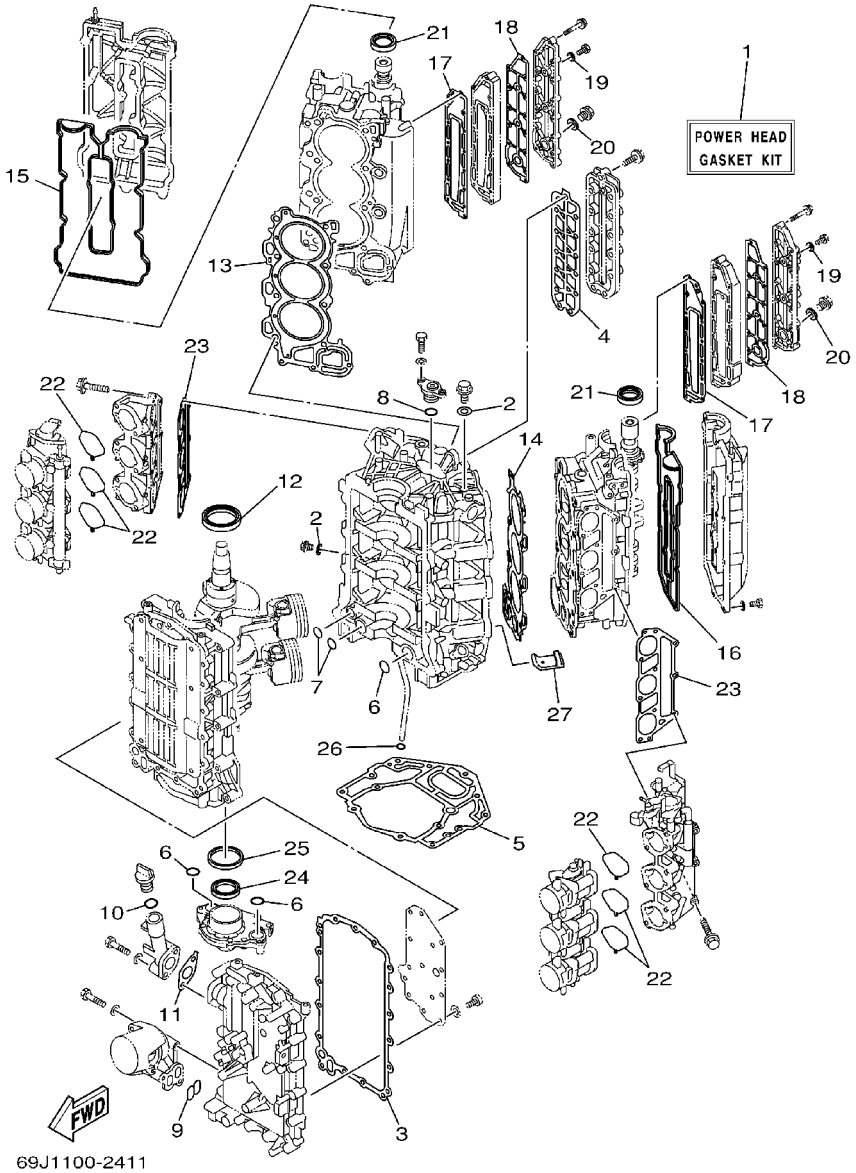

FIG. 42 REPAIR KIT 1

REF. NO.	PART NO.	DESCRIPTION	69J2	60L2	69K2	60M2		REMARKS
1	69J–W0001–01	POWER HEAD GASKET KIT	1	1	1	1		
2	90430–14115	.GASKET	2	2	2	2		
3	69J–15451–00	.GASKET, CRANKCASE COVER 1	1	1	1	1		
4	69J–1131B–00	.GASKET, COVER	1	1	1	1		
5	69J–11351–00	.GASKET, CYLINDER	1	1	1	1		
6	93210–25552	.O–RING	3	3	3	3		
7	93210–19MJ1	.O–RING	2	2	2	2		
8	93210–25647	.O–RING	1	1	1	1		
9	69J–13477–00	.GASKET	1	1	1	1		
10	93210–24M79	.O–RING	1	1	1	1		
11	69J–15364–A0	.GASKET, OIL PLUG	1	1	1	1		
12	93102–63004	.OIL SEAL	1	1	1	1		
13	69J–11181–01	.GASKET, CYLINDER HEAD 1	1	1	1	1		
14	69J–11182–01	.GASKET, CYLINDER HEAD 2	1	1	1	1		
15	69J–11193–00	.GASKET, HEAD COVER 1	1	1	1	1		
16	69J–11194–00	.GASKET, HEAD COVER 2	1	1	1	1		
17	69J–41112–00	.GASKET, EXHAUST INNER COVER	2	2	2	2		
18	69J–41114–00	.GASKET, EXHAUST OUTER COVER	2	2	2	2		
19	90430–08143	.GASKET	4	4	4	4		
20	90430–18130	.GASKET	2	2	2	2		
21	93102–38M59	.OIL SEAL	2	2	2	2		
22	69J–13557–00	.GASKET	6	6	6	6		
23	69J–13645–00	.GASKET, MANIFOLD 1	2	2	2	2		
24	69J–13338–00	.OIL SEAL	1	1	1	1		
25	69J–11355–00	.SEAL, CYLINDER 1	1	1	1	1		
26	93210–19MJ3	.O–RING	1	1	1	1		
27	69J–14664–00	.GROMMET, WATER SHUT	2	2	2	2		

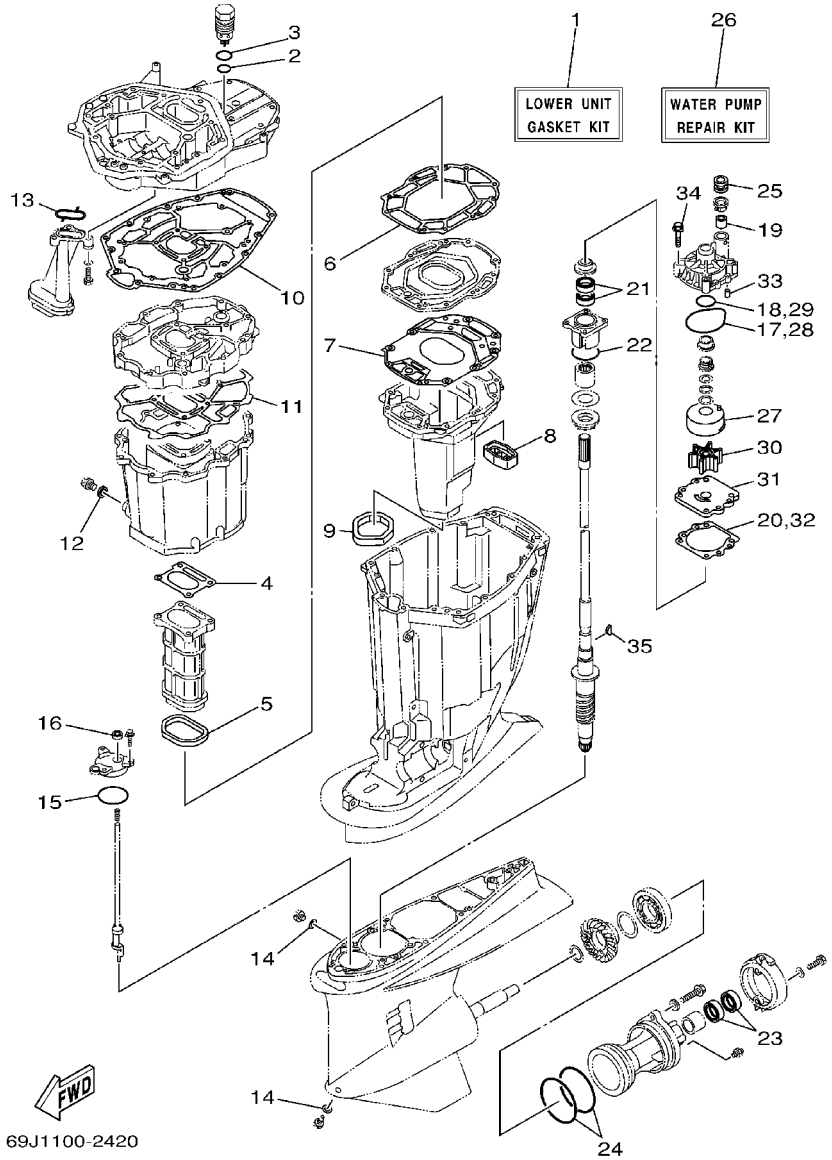

FIG. 43 REPAIR KIT 2

REF. NO.	PART NO.	DESCRIPTION	69J2	60L2	69K2	60M2		REMARKS
1	69J–W0001–20	LOWER UNIT GASKET KIT	1	1	1	1		
2	93210–28543	.O–RING	1	1	1	1		
3	93210–33MG4	.O–RING	1	1	1	1		
4	69J–41134–A0	.GASKET, EXHAUST MANIFOLD	1	1	1	1		
5	69J–41138–00	.SEAL, EXT. 1	1	1	1	1		
6	69J–41135–A0	.GASKET, EXHAUST MANIFOLD	1	1	1	1		
7	69J–41136–A0	.GASKET, EXHAUST MANIFOLD 4	1	1	1	1		
8	69J–45127–00	.SEAL	1	1	1	1		
9	69J–45123–00	.GASKET, MUFFLER	1	1	1	1		
10	69J–45113–00	.GASKET, UPPER CASING	1	1	1	1		
11	69J–15312–00	.GASKET, OIL PAN	1	1	1	1		
12	90430–14M09	.GASKET	1	1	1	1		
13	69J–13415–00	.SEAL, OIL STRAINER	1	1	1	1		
14	90430–08020	.GASKET	2	2	2	2		
15	93210–64488	.O–RING	1	1	1	1		
16	93106–09014	.OIL SEAL	1	1	1	1		
17	93210–86M38	.O–RING	1	1	1	1		
18	93210–37160	.O–RING	1	1	1	1		
19	6E5–44365–00	.DAMPER, WATER SEAL	1	1	1	1		
20	6E5–44315–A0	.GASKET, WATER PUMP	1	1	1	1		
21	93101–28M16	.OIL SEAL	2	2	2	2		
22	93210–55M14	.O–RING	1	1	1	1		
23	93101–30M17	.OIL SEAL	2	2	2	2		
24	93211–04384	.O–RING	2	2	2	2		
25	6E5–44366–00	.DAMPER, WATER SEAL	1	1	1	1		
26	61A–W0078–A3	WATER PUMP REPAIR KIT	1	1	1	1		
27	61A–44322–02	.INSERT, CARTRIDGE	1	1	1	1		

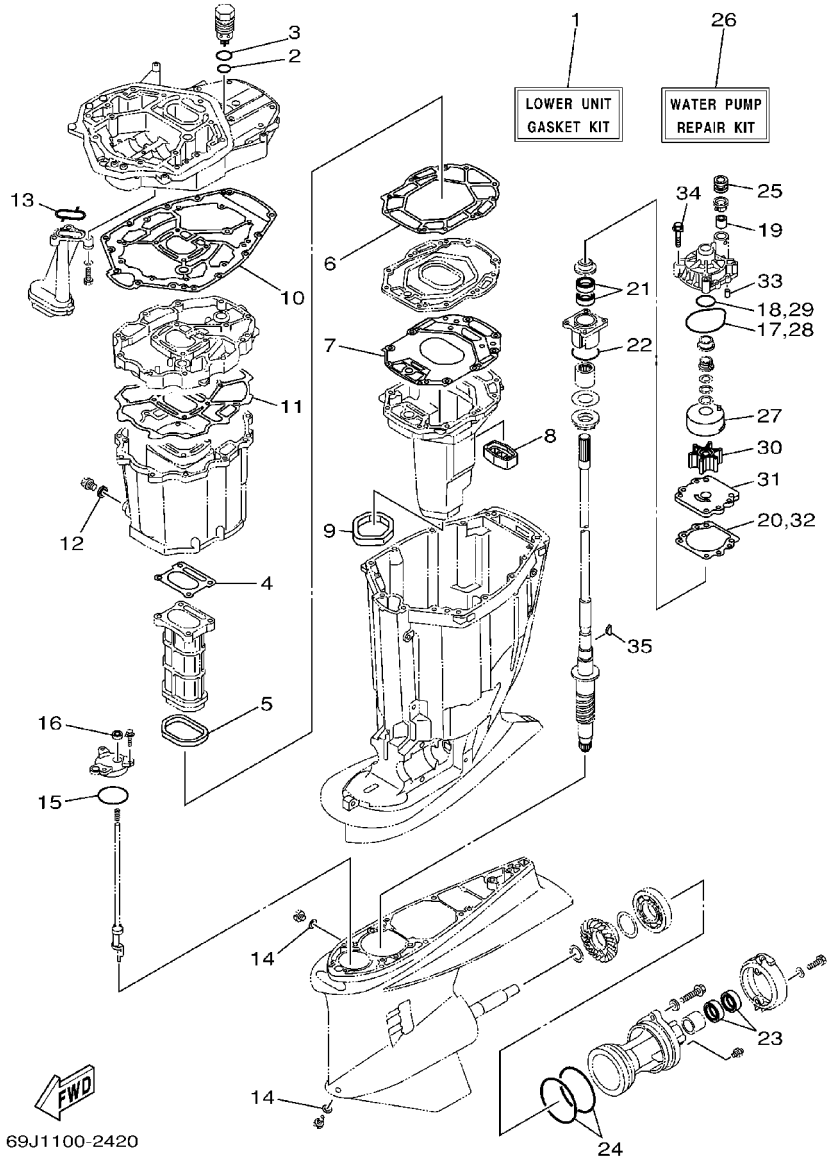

FIG. 43 REPAIR KIT 2

REF. NO.	PART NO.	DESCRIPTION	69J2	60L2	69K2	60M2		REMARKS
28	93210–86M38	.O–RING	1	1	1	1		
29	93210–37160	.O–RING	1	1	1	1		
30	6E5–44352–01	.IMPELLER	1	1	1	1		
31	6G5–44323–00	.OUTER PLATE, CARTRIDGE	1	1	1	1		
32	6E5–44315–A0	.GASKET, WATER PUMP	1	1	1	1		
33	93606–12019	.PIN, DOWEL	2	2	2	2		
34	90119–08M14	.BOLT, WITH WASHER	4	4	4	4		
35	90280–04M05	.KEY, WOODRUFF	1	1	1	1		

NUMERICAL INDEX

PART NO.	REF. NO.
69J−W0001−01	42 − 1
69J−W0001−20	43 − 1
69J−W0070−00	1 − 18
61A−W0078−A3	43 − 26
69J−W009A−01−1S	4 − 1
69J−W009B−01−1S	2 − 1
69J−W009C−01−1S	4 − 8
69J−W1165−00	3 − 7
69J−1111E−00	5 − 12
69J−11110−00−94	4 − 2
69J−11119−00	2 − 20
69J−11120−00−94	4 − 9
69J−11133−10	4 − 3
	4 − 10
69J−11135−00	4 − 32
69J−11168−00	2 − 17
69J−11181−01	4 − 21
	42 − 13
69J−11182−01	4 − 26
	42 − 14
69J−11191−00−1S	4 − 31
69J−11192−00−1S	4 − 38
69J−11193−00	4 − 35
	42 − 15
69J−11194−00	4 − 39
	42 − 16
69J−1131B−00	2 − 23
	42 − 4
69J−1131C−00−1S	2 − 22
69J−11313−00−94	2 − 40
67F−11325−00	4 − 15
69J−11327−00−94	4 − 16
67F−11328−00	4 − 19
69J−11351−00	2 − 33
	42 − 5
69J−11355−00	30 − 19
	42 − 25
69J−11371−00	29 − 9
69J−11411−00	3 − 1
69J−11416−00	3 − 3
69J−11416−10	3 − 3
69J−11416−20	3 − 3
69J−11417−00	3 − 4
69J−11417−10	3 − 4
69J−11417−20	3 − 4
69J−11426−00	3 − 5
69J−11426−10	3 − 5
69J−11426−20	3 − 5

PART NO.	REF. NO.
69J−11427−00	3 − 6
69J−11536−00	6 − 23
69J−11537−00	6 − 18
69J−11590−00	6 − 22
69J−11603−00	3 − 11
69J−11631−00−B0	3 − 10
69J−11633−00	3 − 12
69J−11634−00	3 − 13
69J−11654−00	3 − 8
69J−11656−00	3 − 9
69J−11656−10	3 − 9
69J−11656−20	3 − 9
69J−12111−00	6 − 1
69J−12113−00	6 − 3
69J−12117−00	6 − 4
69J−12118−00	6 − 5
69J−12119−00	6 − 6
69J−12121−00	6 − 2
67F−12138−40	16 − 30
67F−12138−50	16 − 30
67F−12138−60	16 − 30
69J−12153−00	6 − 7
69J−12168−A0	6 − 8
69J−12168−B0	6 − 8
69J−12168−C0	6 − 8
69J−12168−D0	6 − 8
69J−12168−E0	6 − 8
69J−12168−F0	6 − 8
69J−12168−G0	6 − 8
69J−12168−H0	6 − 8
69J−12168−J0	6 − 8
69J−12168−K0	6 − 8
69J−12168−L0	6 − 8
69J−12168−M0	6 − 8
69J−12168−N0	6 − 8
69J−12168−P0	6 − 8
69J−12168−R0	6 − 8
69J−12168−S0	6 − 8
69J−12168−T0	6 − 8
69J−12168−U0	6 − 8
69J−12168−V0	6 − 8
69J−12168−W0	6 − 8
69J−12168−X0	6 − 8
69J−12168−Y0	6 − 8
69J−12168−00	6 − 8
69J−12168−10	6 − 8
69J−12168−20	6 − 8
69J−12168−30	6 − 8

PART NO.	REF. NO.
69J−12168−40	6 − 8
69J−12168−50	6 − 8
69J−12168−60	6 − 8
69J−12168−70	6 − 8
69J−12168−80	6 − 8
69J−12168−90	6 − 8
69J−12169−00	6 − 8
69J−12171−00	6 − 9
69J−12172−00	6 − 11
69J−12181−00	6 − 10
69J−12182−00	6 − 12
69J−12210−00	6 − 14
69J−12230−00	6 − 15
69J−12233−00	29 − 12
69J−1240H−00−1S	2 − 26
67F−12411−00	2 − 25
69J−1243A−00	2 − 30
69J−1243E−00	2 − 31
69J−12481−00	16 − 21
69J−12482−00	16 − 20
69J−12483−00	7 − 8
68T−12572−00	21 − 12
6R3−12581−00	21 − 13
6R3−12582−00	21 − 14
6R3−12583−00	21 − 15
69J−12858−00	2 − 46
69J−13119−00	30 − 17
68V−1312A−00	9 − 17
69J−13160−00	8 − 18
69J−13170−00	10 − 1
69J−13300−00	30 − 14
69J−13329−00	30 − 15
69J−13338−00	30 − 16
	42 − 24
69J−13411−00	30 − 9
69J−13415−00	30 − 11
	43 − 13
67F−13434−02	1 − 26
69J−13435−00	10 − 2
69J−13437−41	15 − 29
69J−13437−51	15 − 29
69J−13437−61	15 − 29
69J−13440−00	2 − 45
69J−13446−00−94	2 − 47
69J−13447−00	2 − 51
67F−13448−00	1 − 16
68V−13473−00	9 − 16
69J−13477−00	2 − 48

PART NO.	REF. NO.
69J−13477−00	42 − 9
69J−13532−00	10 − 20
69J−13533−00	10 − 21
69J−13542−00	10 − 19
68V−13544−00	10 − 17
69J−13545−00	10 − 15
69J−13546−00	10 − 14
69J−13547−00	9 − 33
69J−13557−00	8 − 27
	9 − 23
	42 − 22
69J−13573−00	9 − 31
69J−13574−00	9 − 32
69J−13576−00	8 − 11
68V−13577−00	12 − 9
69J−13593−00	11 − 35
69J−13595−00	10 − 23
69J−13631−00	30 − 18
69J−13641−00	8 − 24
69J−13642−00	9 − 20
69J−13645−00	7 − 10
	42 − 23
69J−13716−00	11 − 36
60L−1375A−00	9 − 1
69J−1375A−00	9 − 1
60L−13750−00	8 − 1
69J−13750−00	8 − 1
60L−13751−00	8 − 2
69J−13751−00	8 − 2
60L−13752−00	9 − 2
69J−13752−00	9 − 2
60L−13753−00	8 − 5
69J−13753−00	8 − 5
60L−13754−00	9 − 7
69J−13754−00	9 − 7
60L−13755−00	8 − 8
69J−13755−00	8 − 8
60L−13756−00	9 − 10
69J−13756−00	9 − 10
69J−13761−00	8 − 31
	9 − 27
68V−13766−00	8 − 33
	9 − 29
68V−13769−00	11 − 12
68V−13781−00	11 − 16
68V−13784−00	11 − 19
69J−13906−00	10 − 6
69J−13907−00	11 − 17

PART NO.	REF. NO.
68V−13915−00	11 − 18
69J−13972−00	8 − 39
69J−13973−00	8 − 37
69J−13974−00	10 − 16
	12 − 25
69J−13975−00	10 − 25
69J−13976−00	12 − 16
68V−1410B−00	8 − 32
	9 − 28
69J−1410F−00	12 − 21
69J−14137−00	12 − 11
69J−14139−00	10 − 24
69J−14146−10	7 − 1
69J−14148−00	11 − 23
69J−14149−00	8 − 44
69J−14159−00	9 − 34
69J−14162−00	7 − 2
69J−14164−00	11 − 31
69J−14180−10	11 − 1
69J−14181−00	11 − 6
69J−14182−00	11 − 2
266−14191−00	11 − 7
69J−14197−00	11 − 24
68V−14225−00	10 − 5
69J−14225−00	11 − 37
69J−14251−00	8 − 21
68V−14255−00	11 − 13
69J−14255−00	9 − 35
69J−14261−00	8 − 16
	8 − 19
68V−14264−00	8 − 34
	10 − 10
68V−14265−00	11 − 33
60L−14286−00	8 − 42
69J−14286−00	8 − 42
69J−14295−00	8 − 20
69J−14321−00	8 − 36
	9 − 30
68V−14323−00	8 − 14
	9 − 5
68V−14331−00	8 − 15
	9 − 6
	9 − 13
69J−14348−00	7 − 28
5JW−14349−00	10 − 18
68V−14356−00	10 − 8
68V−14357−00	11 − 15
68V−14386−00	11 − 10

PART NO.	REF. NO.
68V−14397−00	8 − 22
	10 − 3
69J−14409−00	7 − 6
69J−14419−00	7 − 16
69J−1442A−00	7 − 5
68V−14428−00	8 − 35
	10 − 11
69J−1444F−00	7 − 15
69J−14440−00	7 − 14
69J−14446−00	11 − 34
69J−14457−00	7 − 18
5EL−14467−00	7 − 27
68V−14475−00	8 − 30
	9 − 26
	10 − 9
69J−14496−00	8 − 29
	9 − 25
69J−14546−00	11 − 11
68V−14565−00	8 − 13
	10 − 7
68V−14567−00	11 − 20
3CF−14594−00	8 − 3
	8 − 6
	8 − 9
	9 − 3
	9 − 8
	9 − 11
69J−14624−01	29 − 50
69J−14664−00	2 − 44
	42 − 27
69J−14711−00−5B	29 − 25
69J−14960−00	9 − 15
59V−14962−00	11 − 8
68V−14984−00	11 − 21
69J−14985−00	11 − 9
69J−14989−00	11 − 25
69J−15100−00−1S	2 − 2
69J−15123−00	2 − 7
69J−15187−00	2 − 8
69J−15311−00−5B	30 − 2
69J−15312−00	30 − 1
	43 − 11
69J−15316−00	29 − 36
69J−15319−00−1S	2 − 56
69J−15362−00	30 − 23
6G8−15363−00	2 − 54
69J−15364−A0	2 − 57
	42 − 11

NUMERICAL INDEX

PART NO.	REF. NO.
69J−15373−00	7 − 23
69J−15377−00	30 − 24
69J−15393−00	7 − 25
69J−15394−00	7 − 24
69J−15397−00	7 − 26
69J−15411−00−94	2 − 13
69J−15451−00	2 − 14
	42 − 3
69J−15481−00	2 − 9
69J−15482−00	2 − 10
69J−21841−00	11 − 32
69J−2411R−00	11 − 3
69J−2411T−00	11 − 4
68F−24300−00	8 − 38
	10 − 12
6Y2−24307−41	14 − 1
6Y2−24307−50	14 − 1
61A−24311−00	13 − 5
69J−24313−00	13 − 22
69J−24315−00	12 − 15
69J−24316−00	12 − 7
69J−24317−00	12 − 6
69J−24321−00	12 − 3
69J−24322−00	12 − 4
69J−24323−00	12 − 5
69J−24324−00	12 − 2
69J−24325−00	12 − 20
6E5−24351−51	14 − 3
6Y2−24360−52	14 − 5
6Y2−24360−60	14 − 5
69J−24366−00	12 − 22
69J−24367−00	12 − 23
6R3−24377−00	13 − 3
6R3−24377−10	13 − 24
68V−24377−00	10 − 22
6E5−24378−00	12 − 13
69J−24378−00	1 − 22
6E5−24379−00	21 − 10
69J−24379−00	11 − 22
69J−24381−00	8 − 40
	12 − 26
68V−24387−00	8 − 41
	10 − 13
	12 − 17
69J−24410−00	11 − 26
69J−24422−10	11 − 30
4SV−24453−00	11 − 5
69J−24460−00	12 − 1

PART NO.	REF. NO.
69J−24461−00	12 − 14
61A−24469−00	13 − 12
69J−24491−00	11 − 27
69J−24492−00	11 − 28
69J−24501−00	12 − 18
68V−24519−00	7 − 3
	10 − 26
	12 − 10
61A−24521−00	13 − 7
65L−24531−01	13 − 8
69J−24537−00	12 − 8
65L−24558−00	13 − 19
65L−24560−00	13 − 6
65L−24563−00	13 − 11
61A−24564−00	13 − 9
65L−24564−00	13 − 13
69J−24566−00	13 − 20
65L−24577−00	13 − 10
69J−24592−00	11 − 29
69J−24599−00	12 − 19
68V−2481H−00	12 − 12
69J−28100−00	13 − 25
67F−2812A−00	15 − 27
6A1−28176−00	20 − 52
69J−41111−00−1S	5 − 1
69J−41112−00	5 − 5
	42 − 17
69J−41113−00−1S	5 − 3
69J−41114−00	5 − 6
	42 − 18
69J−41121−00−1S	5 − 2
69J−41123−00−1S	5 − 4
69J−41131−00−94	29 − 16
69J−41132−00−5B	29 − 18
69J−41134−A0	29 − 19
	43 − 4
69J−41135−A0	29 − 22
	43 − 6
69J−41136−A0	29 − 24
	43 − 7
69J−41137−00−94	29 − 1
69J−41138−00	29 − 21
	43 − 5
69J−41210−00	24 − 4
69J−41211−00	24 − 9
69J−41213−00	23 − 23
682−41237−00	24 − 2
69J−41241−00	24 − 1

PART NO.	REF. NO.
69J−41632−00−94	23 − 9
69J−41635−00	24 − 5
69J−41636−00	24 − 10
69J−41661−00−94	23 − 14
676−41662−00	23 − 20
69J−42152−00−94	23 − 5
69J−42153−00	23 − 8
69J−42154−00	23 − 1
68V−42171−00	23 − 2
69J−42510−00−8D	26 − 5
624−42542−00	15 − 25
	17 − 12
60L−42610−00−8D	1 − 1
69J−42610−00−8D	1 − 1
69J−42613−00	1 − 2
69J−42615−00	20 − 10
69J−42617−00	1 − 25
69J−42629−00	1 − 3
68F−42647−01−94	1 − 5
69J−42647−00−94	1 − 6
68F−42648−01−94	1 − 14
68F−42651−00	1 − 10
67F−42652−00	1 − 15
68F−42663−00	1 − 13
69J−42663−00	1 − 7
60L−42677−00	1 − 19
69J−42677−00	1 − 19
60L−42678−00	1 − 17
69J−42678−00	1 − 17
69J−42681−00	1 − 20
69J−42682−00	1 − 21
69J−42710−01−8D	20 − 1
648−42715−00	22 − 27
69J−42716−00	20 − 11
61A−42717−00	20 − 20
69J−42717−00	20 − 19
69J−42723−00−8D	18 − 9
6E5−42724−00	22 − 38
	29 − 8
69J−42725−01	20 − 6
6H1−42726−20	20 − 15
61A−42727−00	20 − 17
64D−42738−10−5B	20 − 8
69J−42738−01−5B	20 − 2
69J−42741−00−8D	21 − 1
69J−42744−10	20 − 3
68F−42753−00	20 − 49
67F−42761−00−94	2 − 34

PART NO.	REF. NO.
69J−42769−00	29 − 32
69J−42771−00−8D	21 − 3
69J−42774−00	21 − 7
69J−42815−00−8D	20 − 31
69J−42816−00−8D	20 − 40
69J−42817−00−8D	20 − 32
67F−42818−00	20 − 43
68F−42818−00	20 − 35
68F−42828−00−5B	20 − 28
68F−42828−10−5B	20 − 38
69J−42828−00−5B	20 − 29
69J−43111−00−8D	25 − 1
69J−43112−00−8D	25 − 14
6E5−43126−02	25 − 45
6R3−43131−00	25 − 21
61A−43132−00	25 − 12
61A−43133−00	25 − 15
6G5−43144−00	25 − 35
64D−43144−00	20 − 46
6E5−43145−01	35 − 8
6G5−43148−00	25 − 40
61A−43181−01	25 − 37
6G5−43185−02	25 − 38
61A−43311−21−8D	25 − 32
61A−43376−00	26 − 3
69J−4380P−00	27 − 12
69J−43800−00−4D	27 − 1
69J−43801−00	27 − 4
69J−43804−00	28 − 5
69J−43805−00	28 − 4
69J−4381C−00	27 − 30
	27 − 35
69J−4381J−00	27 − 64
69J−43810−00	27 − 3
61A−43811−00	27 − 9
61A−43813−01	27 − 18
6H1−43814−00	27 − 17
69J−43816−00	27 − 63
69J−43817−00	27 − 68
61A−43818−00	27 − 25
69J−4382E−00	27 − 11
69J−43820−00	27 − 79
61A−43821−00	27 − 78
61A−43822−00	27 − 77
69J−43828−00	27 − 71
6H1−43829−00	27 − 74
69J−43830−00	27 − 33
69J−43831−00	27 − 66

PART NO.	REF. NO.
69J−43833−00	27 − 21
61A−43835−01	27 − 19
69A−4384F−00	27 − 39
6H1−4384G−11	27 − 54
69J−4384G−00	27 − 58
61A−4384H−10	27 − 82
69J−4384H−00	27 − 10
69J−4384M−00	27 − 38
69J−43840−00	27 − 2
69J−43841−00	27 − 42
69J−43843−00	27 − 53
6H1−43844−10	27 − 55
69J−43844−00	27 − 50
69J−43845−00	27 − 28
69J−43851−00	27 − 49
69J−43853−00	27 − 45
69J−43854−00	27 − 57
69J−43855−00	27 − 52
6H1−43856−10	27 − 56
65W−4386A−00	27 − 44
69J−4386K−00	28 − 10
6H1−43861−00	27 − 6
61A−43861−00	27 − 14
	27 − 16
	27 − 75
69J−43861−00	28 − 6
61A−43864−00	27 − 81
6H1−43869−00	27 − 70
CS3−4387G−00	27 − 59
61A−43871−00	27 − 15
69J−43871−00	27 − 62
6H1−43872−00	27 − 7
61A−43874−00	27 − 80
6H1−43875−00	27 − 29
6T4−43875−00	27 − 76
61A−43875−10	27 − 83
61A−43876−00	27 − 26
69J−4388E−00	27 − 23
69J−4388F−00	27 − 69
69J−4388H−00	27 − 67
69J−4388J−00	27 − 20
69J−43880−00	27 − 84
	28 − 1
69J−43881−00	28 − 11
69J−43882−00	28 − 8
6H1−43883−00	27 − 43
69J−43886−00	28 − 7
69J−43888−00	27 − 72

PART NO.	REF. NO.
61A−4389H−00	27 − 8
69J−4389J−00	27 − 32
	27 − 36
69J−43891−00	28 − 9
69J−43893−00	27 − 46
69J−43894−00	27 − 41
69J−43899−00	27 − 31
69J−44117−00−1S	22 − 5
69J−44118−00	22 − 26
69J−44120−00	22 − 33
69J−44120−10	22 − 33
69J−44121−00	22 − 21
69J−44122−00	22 − 22
69J−44135−00	23 − 24
69J−44150−00	31 − 15
69K−44150−00	33 − 17
69J−44176−01−1S	22 − 8
61A−44311−01	31 − 18
	33 − 20
6E5−44312−00	31 − 23
	33 − 25
6E5−44315−A0	31 − 31
	33 − 33
	43 − 20
	43 − 32
61A−44322−02	31 − 19
	33 − 21
	43 − 27
6G5−44323−00	31 − 30
	33 − 32
	43 − 31
6E5−44352−01	31 − 24
	33 − 26
	43 − 30
69J−44361−00	32 − 3
	34 − 3
69J−44361−10	32 − 3
	34 − 3
6E5−44365−00	31 − 22
	32 − 1
	33 − 24
	34 − 1
	43 − 19
6E5−44366−00	29 − 54
	32 − 2
	34 − 2
	43 − 25
663−44366−00	31 − 6

NUMERICAL INDEX

PART NO.	REF. NO.
663−44366−00	33 − 8
69J−44391−00	20 − 18
61A−44511−00−94	26 − 32
66K−44514−00−94	26 − 24
6G5−44526−00	25 − 3
68F−44533−00	2 − 35
69J−44533−00	26 − 31
69J−44551−00−8D	26 − 10
61A−44552−01−94	26 − 21
66K−44555−00−94	26 − 13
61A−44575−00	26 − 12
69J−45111−01−8D	29 − 31
69J−45113−00	29 − 33
	43 − 10
69J−45123−00	29 − 30
	43 − 9
69J−45127−00	29 − 29
	43 − 8
69J−45151−00−8D	21 − 8
69J−45152−00−8D	29 − 37
61A−45155−00	29 − 41
69J−45159−00	29 − 56
69J−45181−00−5B	29 − 23
69J−45211−01−8D	29 − 53
61A−45214−10	32 − 10
	34 − 10
61A−45215−10	32 − 11
	34 − 11
6G5−45251−02	25 − 2
69J−45300−21−8D	31 − 1
69J−45300−31−8D	31 − 1
69K−45300−21−8D	33 − 1
69K−45300−31−8D	33 − 1
61A−45301−10−8D	31 − 2
	33 − 2
69J−45318−00	29 − 39
61A−45321−01	31 − 11
	33 − 13
61A−45331−00−94	31 − 34
	33 − 36
69J−45332−00−94	31 − 60
69K−45332−00−94	33 − 63
688−45341−10	31 − 8
	33 − 10
6E5−45344−00	31 − 40
	33 − 42
69J−45361−00−8D	31 − 71
	33 − 77

PART NO.	REF. NO.
61A−45371−00	32 − 14
	34 − 14
69J−45375−00	32 − 9
	34 − 9
61A−45376−00−94	31 − 10
	33 − 12
61A−45378−00	29 − 47
61B−45383−00	33 − 68
69K−45384−00	33 − 69
61A−45501−30	31 − 43
	33 − 45
69J−45501−00	31 − 43
	33 − 45
61A−45527−00	31 − 27
	33 − 29
61A−45538−00	31 − 26
	33 − 28
61B−45538−01	33 − 4
69J−45551−00	31 − 44
	33 − 46
69J−45560−00	31 − 47
69K−45560−00	33 − 49
61A−45567−00−10	31 − 5
	33 − 7
61A−45567−00−12	31 − 5
	33 − 7
61A−45567−00−15	31 − 5
	33 − 7
61A−45567−00−18	31 − 5
	33 − 7
61A−45567−00−30	31 − 5
	33 − 7
61A−45567−00−40	31 − 5
	33 − 7
61A−45567−00−50	31 − 5
	33 − 7
69J−45571−00	31 − 62
69K−45571−00	33 − 65
61A−45577−00−10	31 − 64
61A−45577−00−12	31 − 64
61A−45577−00−15	31 − 64
61A−45577−00−18	31 − 64
61A−45577−00−30	31 − 64
61A−45577−00−40	31 − 64
61A−45577−00−50	31 − 64
69K−45577−00	33 − 70
69K−45577−10	33 − 70
69K−45577−20	33 − 70

PART NO.	REF. NO.
69K−45577−30	33 − 70
69K−45577−40	33 − 70
69K−45577−50	33 − 70
69K−45577−60	33 − 70
6K1−45578−01−10	33 − 67
6K1−45578−01−12	33 − 67
6K1−45578−01−15	33 − 67
6K1−45578−01−18	33 − 67
6K1−45578−01−30	33 − 67
6K1−45578−01−40	33 − 67
6K1−45578−01−50	33 − 67
61A−45587−00−10	31 − 37
	33 − 39
61A−45587−00−12	31 − 37
	33 − 39
61A−45587−00−15	31 − 37
	33 − 39
61A−45587−00−18	31 − 37
	33 − 39
61A−45587−00−30	31 − 37
	33 − 39
61A−45587−00−40	31 − 37
	33 − 39
61A−45587−00−50	31 − 37
	33 − 39
69J−45611−00	31 − 48
69K−45611−00	33 − 51
69J−45631−00	31 − 52
	33 − 55
61A−45632−00	31 − 51
	33 − 54
61A−45633−00	31 − 53
	33 − 56
61A−45634−01	31 − 50
	33 − 53
61A−45635−00	31 − 55
	33 − 58
69J−45641−00	31 − 49
69K−45641−00	33 − 52
6H1−45668−00	31 − 54
	33 − 57
6G5−45970−02−98	32 − 21
6K1−45970−01−98	34 − 21
6R1−45970−A0	34 − 21
6R4−45970−A0	32 − 21
6G5−45972−02−98	32 − 21
6K1−45972−01−98	34 − 21
6R1−45972−A0	34 − 21

PART NO.	REF. NO.
6R4−45972−A0	32 − 21
61A−45972−00−98	32 − 21
61B−45972−00−98	34 − 21
66K−45972−B0	32 − 21
6G5−45974−03−98	32 − 21
6K1−45974−02−98	34 − 21
6R1−45974−A0	34 − 21
6R4−45974−A0	32 − 21
61A−45974−00−98	32 − 21
61B−45974−00−98	34 − 21
6R1−45976−A0	34 − 21
6R4−45976−A0	32 − 21
6G5−45978−03−98	32 − 21
6K1−45978−02−98	34 − 21
6R1−45978−A0	34 − 21
6R4−45978−A0	32 − 21
61A−45978−00−98	32 − 21
61B−45978−00−98	34 − 21
69J−45987−00	32 − 16
	34 − 16
688−45997−01	32 − 17
	34 − 17
69J−46241−00	6 − 21
703−48205−17	37 − 1
704−48205−14	37 − 2
704−48207−23	37 − 2
701−48320−40	37 − 3
701−48320−50	37 − 3
701−48320−60	37 − 3
701−48320−80	37 − 3
6E5−48344−00	22 − 3
	23 − 12
701−48350−20	37 − 3
69J−48531−00	22 − 1
6E5−61301−01	36 − 1
6E5−61303−00	36 − 5
6E5−61311−11	36 − 3
6E5−61313−00	36 − 2
6E5−61315−00	36 − 4
6E5−61350−02	35 − 1
6E5−61351−01	35 − 2
6E5−61355−00	35 − 5
68V−81145−01	8 − 12
68V−81146−01	9 − 18
68V−81147−00	8 − 23
	9 − 14
	10 − 4
69J−8132G−00	15 − 17

PART NO.	REF. NO.
67F−81332−00	15 − 14
69J−81337−00	15 − 22
63D−81345−20	15 − 5
69J−81410−01	15 − 4
69J−81450−10	15 − 1
69J−81460−01	15 − 2
69J−81673−00	15 − 13
69J−81800−00	19 − 1
69J−81801−00	19 − 5
67F−81807−00	19 − 10
67F−81808−00	19 − 8
67F−81809−00	19 − 19
67F−81810−00	19 − 3
67F−81813−00	19 − 6
68V−8182L−00	8 − 43
68F−81820−00	19 − 7
67F−81821−00	19 − 13
6K7−81826−10	19 − 24
69J−81828−00	19 − 25
67F−8183R−00	19 − 16
67F−8183T−00	19 − 18
67F−81830−00	19 − 17
67F−81832−00	19 − 11
67F−81836−00	19 − 12
69J−81839−00	19 − 21
69J−81840−00	19 − 4
67F−81841−00	19 − 14
69J−81842−00	19 − 20
67F−81846−00	19 − 26
67F−81850−00	19 − 2
67F−81857−00	19 − 9
69J−81869−00	19 − 23
67F−81891−00	19 − 15
69J−81919−00	17 − 32
69J−81919−20	15 − 28
69J−81925−00	17 − 4
68V−8194A−00	17 − 14
69J−81941−00	19 − 22
69J−81942−00	17 − 27
69J−81948−00	17 − 10
69J−81949−00	18 − 17
68V−81950−00	17 − 30
69J−81950−10	17 − 21
68V−81953−00	17 − 18
69J−81960−10	16 − 12
69J−81972−01−1S	16 − 14
69J−81975−A0	16 − 13
6K1−81980−00	39 − 17

PART NO.	REF. NO.
69J−82105−00	17 − 9
6Y5−82117−00	38 − 17
	38 − 26
6G5−82119−00	17 − 20
69J−82147−00	25 − 34
6E5−82148−00	25 − 9
6H1−82148−00	25 − 6
6E5−82149−00	26 − 16
1E6−82151−00	38 − 16
67F−82151−20	18 − 2
69J−82310−00	16 − 4
69J−82314−00	16 − 9
69J−82316−00	16 − 1
6A0−82317−00	15 − 24
	17 − 11
663−82317−01	15 − 23
	16 − 11
63V−82377−50	25 − 49
67F−82377−00	20 − 54
68V−82380−00	9 − 19
6K1−82510−06	39 − 3
6R5−82510−02	40 − 4
61B−82510−01	41 − 4
69J−82519−00	16 − 24
703−82531−00	38 − 27
61B−82551−01	41 − 3
68F−82553−80	38 − 18
68F−82553−90	38 − 18
69J−82554−00	20 − 25
682−82556−00	39 − 6
	40 − 7
	41 − 7
69J−82560−00	2 − 60
69J−82563−00	18 − 8
6E3−8257H−00	20 − 53
6K1−82570−07	39 − 1
6R5−82570−04	40 − 1
61B−82570−02	41 − 1
6K1−82571−01	39 − 2
6R5−82571−01	40 − 3
6K1−82575−00	39 − 5
	41 − 6
688−82575−01	40 − 6
676−82577−00	40 − 5
	41 − 5
703−82577−00	39 − 4
6K1−8258A−40	39 − 22
	40 − 17

NUMERICAL INDEX

PART NO.	REF. NO.
6K1−8258A−40	41 − 18
61B−8258A−01	39 − 23
	41 − 19
64D−82581−00	40 − 8
69J−82587−00	18 − 10
6E5−82588−00	20 − 21
6E9−82588−00	2 − 62
6R5−82588−01	40 − 2
61A−82588−00	22 − 15
61B−82588−01	41 − 2
68F−8259F−00	22 − 13
69J−8259F−00	22 − 14
69J−8259L−00	10 − 27
69J−8259N−10	18 − 13
69J−82590−20	18 − 1
69J−82590−30	18 − 1
68V−82594−00	20 − 51
69J−83306−00	18 − 14
6R5−83383−00	40 − 12
	41 − 12
688−83383−11	39 − 11
6Y5−8350F−00	38 − 21
6Y5−8350T−01	38 − 1
6Y5−8350T−80	38 − 1
6Y5−83500−S5	38 − 6
6Y5−83533−T2	38 − 10
6Y5−83553−F1	38 − 23
6Y5−83553−M0	38 − 15
6Y5−83553−00	38 − 15
6Y5−83557−10	38 − 19
6Y5−83557−31	38 − 11
6E5−83558−00	29 − 44
6Y5−83570−S5	38 − 7
6K1−83614−01	39 − 7
	41 − 8
69J−83614−00	18 − 11
6A1−83625−41	15 − 30
6A1−83625−51	15 − 31
69J−83626−00	16 − 29
69J−83651−00	2 − 63
69J−83672−00	26 − 1
6Y5−83728−00	38 − 12
663−85518−00	23 − 10
689−85547−00	13 − 1
69J−85580−00	15 − 3
6Y5−85752−01	38 − 24
61A−85790−00	16 − 27
6K1−85830−01	39 − 12

PART NO.	REF. NO.
61B−85830−00	41 − 13
69J−85885−00	8 − 17
65L−85886−00	7 − 29
60L−8591A−01	17 − 1
69J−8591A−02	17 − 1
6Y5−87122−S0	38 − 14
	38 − 22
9E450−04433	38 − 2
9E450−04533	38 − 3
90101−09M70	36 − 9
90101−12M05	25 − 50
90101−12M77	25 − 50
90105−08036	31 − 68
	33 − 74
90105−10M00	32 − 15
	34 − 15
90109−06M81	20 − 22
90109−06M82	18 − 15
	20 − 5
	20 − 9
	20 − 30
	20 − 39
90109−06M86	2 − 27
	18 − 12
	20 − 24
	20 − 26
	20 − 47
	22 − 2
90109−06040	23 − 25
90109−08019	22 − 11
90109−14M10	26 − 28
90109−14M48	26 − 17
90110−05010	6 − 24
90110−06038	16 − 10
90111−06025	21 − 4
	21 − 9
90111−06026	21 − 5
90116−06032	7 − 4
90116−10012	29 − 57
90119−06MA2	2 − 21
	5 − 13
90119−06MA3	16 − 15
90119−06MA4	2 − 24
90119−06MA5	16 − 16
90119−06M10	31 − 14
	33 − 16
90119−06M17	29 − 49
90119−06M24	7 − 13

PART NO.	REF. NO.
90119−06M59	15 − 26
	17 − 13
90119−06027	5 − 7
90119−06036	7 − 20
90119−06037	13 − 21
90119−06041	16 − 3
90119−07234	4 − 7
	4 − 14
90119−07235	4 − 6
	4 − 13
90119−08M14	31 − 33
	33 − 35
	43 − 34
90119−08M22	20 − 12
90119−08M66	2 − 12
90119−08M79	29 − 2
90119−08M91	4 − 24
	4 − 29
90119−08009	2 − 16
90119−08021	4 − 25
	4 − 30
90119−08022	7 − 11
90119−10MA2	32 − 8
	34 − 8
90119−10M06	6 − 19
90119−10007	29 − 34
90119−10008	29 − 61
90119−10009	32 − 8
	34 − 8
90149−05M05	39 − 18
	40 − 13
	41 − 20
90152−05003	32 − 12
	34 − 12
90155−10001	4 − 23
	4 − 28
90158−06002	38 − 25
90169−05M00	17 − 28
90170−09M05	36 − 10
90170−14M06	36 − 6
90170−16M19	31 − 46
	33 − 48
90171−18M04	32 − 19
	34 − 19
90173−06001	21 − 2
90179−06M28	1 − 4
	7 − 22
90179−24002	15 − 12

PART NO.	REF. NO.
90183−02M03	31 − 57
	33 − 60
90185−05002	32 − 13
	34 − 13
90185−09M01	35 − 6
	36 − 11
90185−14M00	26 − 19
	26 − 29
90185−22M11	25 − 24
90201−02M00	31 − 56
	33 − 59
90201−06M31	24 − 8
90201−06068	13 − 18
	20 − 37
	20 − 45
90201−08023	31 − 69
	33 − 75
90201−09M02	22 − 36
90201−10M02	23 − 11
	23 − 27
90201−10M20	35 − 7
90201−10M76	36 − 8
90201−12M05	25 − 52
90201−13M01	25 − 51
90201−15M58	26 − 18
90201−16M00	31 − 45
	33 − 47
90201−16M01	26 − 25
90201−16M55	26 − 15
90201−22M01	31 − 28
	33 − 30
90201−24014	15 − 11
90201−26M59	25 − 23
90201−28M01	26 − 27
90201−31M00	31 − 63
90201−40M00	26 − 6
90202−08M20	22 − 23
90202−28M46	26 − 26
90202−32M19	26 − 14
90202−40M47	26 − 9
90206−10M04	23 − 26
90206−14N50	28 − 2
90206−15M18	20 − 34
	20 − 42
90206−22M19	31 − 29
	33 − 31
90249−06M19	25 − 41
90280−04M05	31 − 25

PART NO.	REF. NO.
90280−04M05	33 − 27
	43 − 35
90280−04008	6 − 25
90280−05015	15 − 10
90340−08002	31 − 7
	33 − 9
90340−14M06	2 − 5
	5 − 14
	30 − 7
90340−18M09	5 − 10
90344−51019	4 − 4
	4 − 11
90386−06M12	22 − 25
90386−08001	7 − 19
90386−10M16	25 − 39
90386−10025	23 − 3
90386−12069	22 − 10
90386−15M73	20 − 33
	20 − 41
90386−18M14	25 − 47
	27 − 24
90386−18M63	25 − 46
90386−25M31	25 − 22
90386−39M89	26 − 7
90386−90M90	22 − 35
90387−06M64	30 − 10
90387−06037	29 − 13
90387−06038	7 − 21
90387−08M37	20 − 14
90387−10M02	25 − 42
90387−10M08	4 − 22
	4 − 27
90387−10M61	35 − 3
90430−06014	8 − 26
	9 − 22
90430−08020	31 − 9
	33 − 11
	43 − 14
90430−08143	5 − 9
	42 − 19
90430−14M09	30 − 8
	43 − 12
90430−14115	2 − 6
	5 − 15
	42 − 2
90430−18130	5 − 11
	42 − 20
90445−07010	29 − 46

PART NO.	REF. NO.
90445−07012	29 − 46
90445−11012	21 − 11
90445−11020	1 − 23
90445−11021	1 − 24
90445−11028	21 − 16
90445−13M01	14 − 2
90445−13004	13 − 2
90462−20001	20 − 23
90464−07M56	16 − 8
	17 − 29
90464−09M47	20 − 27
90464−09010	22 − 20
90464−12002	16 − 7
90464−20258	20 − 50
90465−06M67	23 − 17
90465−06M86	22 − 19
90465−08M83	25 − 18
	25 − 26
90465−11M10	2 − 32
	2 − 61
	13 − 4
	13 − 23
	20 − 16
	21 − 17
	22 − 18
	25 − 25
	29 − 45
	38 − 13
	38 − 20
90465−11M52	7 − 17
90465−13M18	15 − 20
	18 − 16
90465−13M30	20 − 7
90465−14M66	15 − 21
90467−08M18	16 − 23
90467−09M03	7 − 9
	16 − 22
90468−18008	22 − 4
	22 − 24
	23 − 13
90480−06M19	14 − 4
90480−09M21	16 − 2
90480−14M17	21 − 6
90480−22M81	20 − 13
90501−10M77	31 − 58
	33 − 61
90501−11M10	31 − 17
	33 − 19

NUMERICAL INDEX

PART NO.	REF. NO.
90501−12082	22 − 29
90506−16M34	20 − 48
90506−16003	25 − 44
90508−20020	22 − 12
90560−12M01	35 − 4
91318−05025	27 − 60
91318−05040	27 − 65
91490−20015	22 − 37
91490−40030	32 − 20
	34 − 20
91690−30008	24 − 6
91690−30010	22 − 32
91690−30018	23 − 7
91690−30020	25 − 43
91690−30025	23 − 6
91690−50014	7 − 12
91809−08006	4 − 5
	4 − 12
91814−18001	2 − 4
92903−05100	40 − 10
	40 − 15
92903−05600	40 − 16
92903−06600	17 − 26
92903−08100	19 − 30
92903−08600	19 − 28
92907−04600	2 − 19
	4 − 34
92907−06600	30 − 13
92990−04100	38 − 4
	38 − 8
92990−05100	39 − 9
	39 − 20
	41 − 10
	41 − 23
92990−05600	39 − 21
	41 − 22
92990−06100	1 − 8
	39 − 15
	41 − 16
92990−06600	29 − 52
	39 − 16
	41 − 17
92990−08100	8 − 4
	8 − 7
	8 − 10
	9 − 4
	9 − 9
	9 − 12
92990−10100	29 − 59
92990−10600	16 − 28
	29 − 58
92990−18200	32 − 18
	34 − 18
92995−04100	22 − 17
92995−06100	13 − 17
	15 − 8
	16 − 18
	17 − 16
	17 − 23
	18 − 4
92995−06600	1 − 12
	2 − 29
	2 − 37
	2 − 43
	2 − 50
	2 − 53
	2 − 59
	4 − 18
	4 − 37
	4 − 41
	13 − 15
	15 − 9
	15 − 16
	15 − 19
	16 − 6
	16 − 19
	16 − 26
	17 − 3
	17 − 8
	17 − 17
	17 − 24
	18 − 5
	18 − 7
	22 − 7
	22 − 31
	23 − 16
	23 − 19
	23 − 22
	25 − 5
	25 − 8
	25 − 11
	25 − 20
	25 − 28
	29 − 15
	29 − 43
	30 − 21
92995−06600	30 − 27
92995−08600	17 − 6
	29 − 27
	30 − 5
	31 − 42
	31 − 73
	33 − 44
	33 − 79
92995−10100	25 − 30
	32 − 6
	34 − 6
92995−10600	25 − 31
	26 − 23
	26 − 34
	29 − 4
	29 − 6
	32 − 7
	34 − 7
92995−14600	26 − 20
	26 − 30
93101−28M16	31 − 35
	33 − 37
	43 − 21
93101−30M17	31 − 66
	33 − 72
	43 − 23
93102−38M59	6 − 20
	42 − 21
93102−63004	3 − 2
	42 − 12
93106−09014	31 − 13
	33 − 15
	43 − 16
93106−19N50	27 − 5
93210−064A5	27 − 51
93210−08391	27 − 48
93210−09165	22 − 34
	27 − 73
93210−16275	35 − 9
93210−17239	27 − 22
93210−18397	27 − 27
93210−19MJ1	2 − 39
	42 − 7
93210−19MJ3	30 − 25
	42 − 26
93210−24M79	2 − 55
	42 − 10
93210−25552	2 − 38
93210−25552	30 − 22
	42 − 6
93210−25647	2 − 41
	42 − 8
93210−28543	29 − 10
	43 − 2
93210−33MG4	29 − 11
	43 − 3
93210−35321	26 − 8
93210−37160	31 − 21
	33 − 23
	43 − 18
	43 − 29
93210−55M14	31 − 39
	33 − 41
	43 − 22
93210−64488	31 − 12
	33 − 14
	43 − 15
93210−86M38	31 − 20
	33 − 22
	43 − 17
	43 − 28
93211−04384	31 − 67
	33 − 73
	43 − 24
93306−210U0	31 − 61
93311−832V2	31 − 3
	33 − 3
93315−43061	31 − 65
	33 − 71
93315−660W3	33 − 5
93317−330U2	31 − 36
	33 − 38
93317−428U7	33 − 50
93332−000W1	31 − 4
93332−00048	33 − 64
93341−440U5	33 − 66
93341−670V0	33 − 6
93341−930U9	31 − 38
	33 − 40
93399−999T6	28 − 3
93410−10082	23 − 4
93410−18M02	25 − 48
93410−37M04	26 − 11
93420−36M01	29 − 40
93501−04M02	22 − 28
93501−04011	31 − 59
93501−04011	33 − 62
93501−08001	27 − 47
93503−16003	27 − 37
93505−32038	27 − 13
	27 − 34
93604−35236	27 − 61
93605−10108	6 − 17
93606−12019	2 − 3
	2 − 15
	29 − 48
	31 − 32
	33 − 34
	43 − 33
93606−19M23	29 − 28
93608−12M05	29 − 55
	32 − 4
	34 − 4
93608−16M16	29 − 7
	29 − 17
	29 − 35
	30 − 6
93700−06M01	22 − 9
93700−06M03	25 − 17
	25 − 33
93700−09M00	31 − 70
	33 − 76
94581−99044	6 − 13
94702−00391	4 − 42
95303−05600	40 − 14
95303−05700	40 − 11
95333−08600	19 − 29
95380−04600	38 − 5
	38 − 9
95380−05600	24 − 3
	39 − 10
	39 − 19
	41 − 11
	41 − 21
95380−06600	1 − 9
	39 − 14
	41 − 15
95380−10600	29 − 60
95380−12600	25 − 53
95380−14700	36 − 7
95680−05100	24 − 11
95707−06500	2 − 11
95780−10300	26 − 4
95895−06030	24 − 7
97013−06025	6 − 16
	17 − 25
97013−08045	19 − 27
97027−06025	30 − 12
97075−06020	4 − 17
97075−06030	22 − 30
97075−08035	29 − 26
97075−10035	29 − 5
97075−10045	29 − 3
97095−06010	8 − 25
	9 − 21
	17 − 15
	17 − 22
	25 − 7
	25 − 36
	29 − 42
97095−06012	16 − 25
97095−06014	13 − 14
	17 − 7
	23 − 18
	25 − 27
	29 − 38
97095−06016	1 − 11
	13 − 16
	15 − 18
	17 − 2
97095−06020	2 − 42
	16 − 5
	16 − 17
	18 − 3
	20 − 36
	20 − 44
	23 − 21
	29 − 14
	30 − 26
97095−06025	2 − 28
	2 − 36
	25 − 4
97095−06030	4 − 36
	4 − 40
97095−06035	15 − 7
	18 − 6
	22 − 6
97095−06040	2 − 52
	30 − 20
97095−06045	2 − 49
	2 − 58
	23 − 15

NUMERICAL INDEX

PART NO.	REF. NO.
97095−08014	5 − 8
97095−08020	17 − 5
	31 − 72
	33 − 78
97095−08025	31 − 41
	33 − 43
97095−08035	30 − 4
97095−10045	25 − 29
	26 − 22
	26 − 33
	32 − 5
	34 − 5
97303−05012	40 − 9
97575−08540	4 − 20
97575−08560	30 − 3
97575−08590	29 − 20
97780−60520	21 − 18
97780−60620	7 − 7
	17 − 19
97780−60625	17 − 31
97880−06016	29 − 51
97885−04016	22 − 16
97885−06010	15 − 15
	20 − 4
	25 − 13
	25 − 16
97885−06012	25 − 10
	25 − 19
97885−06016	26 − 2
98507−04008	2 − 18
	4 − 33
	11 − 14
98582−05008	12 − 24
98980−05010	39 − 8
	41 − 9
98980−06020	39 − 13
	41 − 14
99001−03600	27 − 40
99001−08600	31 − 16
	33 − 18
99530−08012	15 − 6
99530−10114	8 − 28
	9 − 24

F200TRB/F225TRB/LF200TRB/LF225TRB/
F200A/F225A/FL200A/FL225A
PARTS CATALOGUE
©2002 by Yamaha Motor Co., Ltd.
1st Edition, Apr. 2002
All rights reserved.
Any reprinting or unauthorized use
without the written permission of
Yamaha Motor Co., Ltd.
is expressly prohibited.

G7