YAMAHA

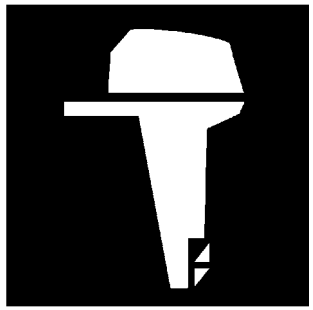

PARTS CATALOGUE

Z150/Z150P'04 (68H3)
Z175/Z175G'04 (68L3)
Z200/Z200N'04 (68F3)
LZ150/LZ150P'04 (68K3)
LZ200/LZ200N'04 (68G3)

1C68F-100E1

(2C68F-100E1)

YAMAHA
GENUINE
Parts & Accessories

FOREWORD

This Parts Catalogue is related to the parts for the model(s) on the cover page. When you are ordering replacement parts, please refer to this Parts Catalogue and quote both part numbers and part names correctly.

1. Modifications or additions which have been made after the issue of the Parts Catalogue will be announced in the Parts News.
   It is advisable that you make the necessary corrections to the Parts Catalogue according to the Parts News.

2. Abbreviations
   The following abbreviations are used in this Parts Catalogue.

   "UR" Use specified parts number.
   "UN" Use as many as needed.
   "AP" Alternate Parts
   "LM" Locally Made (Parts need to be ordered locally)
   "F#" Frame No. (Applicable machine No.)
   "O/S" Over Size

3. The number of components for assembly
   - Parts, which are to be supplied in an assembly, are listed with a dot (.) in front of the part name as shown below.
   - The numeral appearing to the right of each component part indicates the quantity of parts for each assembly unit.

PART NO.	DESCRIPTION	Q'TY	REMARKS
2F5–83310–60	FRONT FLASHER LIGHT ASSY	2	
115–83311–60	.BULB (6V–18W)	1	

4. Applicable colours of graphics are represented in the "REMARKS" as shown below.

PART NO.	DESCRIPTION	Q'TY	REMARKS
2N4–24110–00–X5	FUEL TANK COMP.	2	MXR
3J1–24240–10	.GRAPHIC, FUEL TANK	1	FOR MXR

5. Note that the illustrations for reference in finding parts numbers are not to be used for assembling. When assembling, please use the applicable service manual.

6. The asterisk (*) before a reference number indicates modified items after the first edition.

7. Applicable Serial No.

   Engine Serial No.

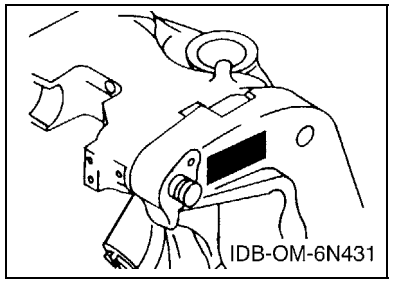

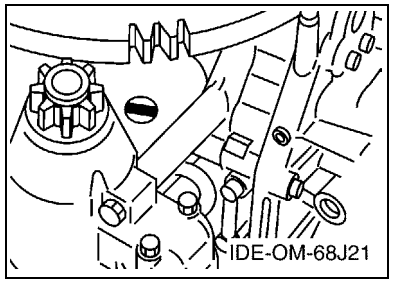

8. Applicable Engine Starting Serial No.

Model	Serial No.	Model	Serial No.
Z150	6G4-1006970	Z150P	6G4-1006970
Z175	6G5-1000348	Z175G	6G5-1000348
Z200	6G6-1008788	Z200N	6G6-1008788
LZ150	6K0-1000468	LZ150P	6K0-1000468
LZ200	6K1-1001418	LZ200N	6K1-1001418

9. Applicable Colour Code

Abbreviation	Colour Name	Colour Code
DBN1	DARK BLUISH GRAY 1	008D

10. Quantity Column Information

Column No.	Name Of Q'ty Column	Applicable Model
1	68H3	Z150TRC,Z150PETO
2	68L3	Z175TRC,Z175GETO
3	68F3	Z200TRC,Z200NETO
4	68K3	LZ150TRC,LZ150PETO
5	68G3	LZ200TRC,LZ200NETO

CONTENTS

SHEET1/2
TOP COWLING 1 ..... A4
TOP COWLING 2 ..... A6
CYLINDER. CRANKCASE 1 ..... B1
CRANKSHAFT. PISTON B3
CYLINDER. CRANKCASE 2 ..... B5
FUEL PUMP DRIVE GEAR B7
VAPOR SEPARATOR 1 ..... C1
VAPOR SEPARATOR 2 ..... C4
FUEL INJECTION PUMP C5
FUEL INJECTION NOZZLE C7
INTAKE D1
OIL PUMP D2
OIL TANK D4
FUEL 1 ..... D6
FUEL 2 ..... E1
GENERATOR E2
ELECTRICAL 1 ..... E3
ELECTRICAL 2 ..... E5
ELECTRICAL 3 ..... E7
ELECTRICAL 4 ..... F3
STARTING MOTOR F4
BOTTOM COWLING F6

INDEX

NUMERICAL INDEX G1

SHEET2/2
BOTTOM COWLING A4*
CONTROL A5*
BRACKET 1 ..... A7*
BRACKET 2 ..... B2*
POWER TRIM & TILT ASSY 1 ..... B4*
POWER TRIM & TILT ASSY 2 ..... B6*
UPPER CASING C1*
LOWER CASING. DRIVE 1 ..... C3*
LOWER CASING. DRIVE 2 ..... C7*
LOWER CASING. DRIVE 3 ..... D2*
LOWER CASING. DRIVE 4 ..... D6*
FUEL TANK D7*
STEERING GUIDE ATTACHMENT 1 ..... E1*
STEERING GUIDE ATTACHMENT 2 ..... E2*
REMOTE CONTROL BOX E3*
METER E4*
SWITCH. PANEL 1 ..... E6*
SWITCH. PANEL 2 ..... E7*
REPAIR KIT 1 ..... F1*
REPAIR KIT 2 ..... F2*

INDEX

NUMERICAL INDEX G1*

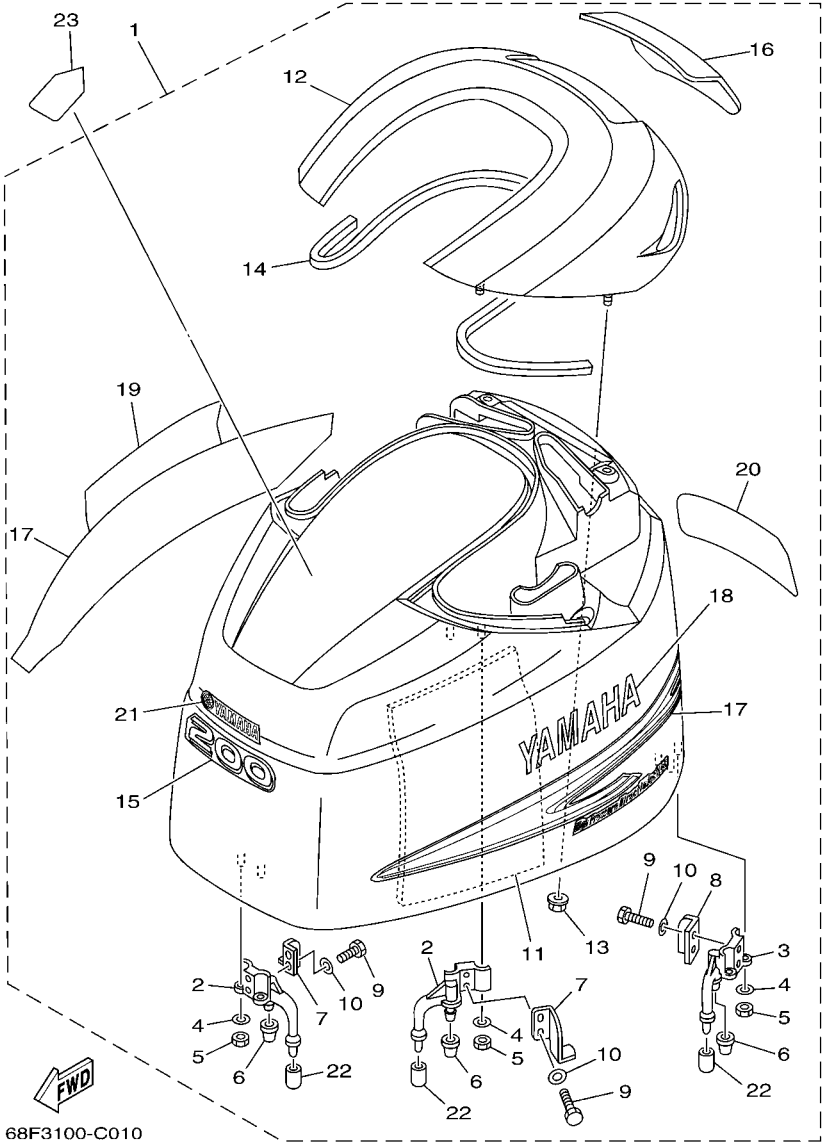

FIG. 1 TOP COWLING 1

REF. NO.	PART NO.	DESCRIPTION	68H3	68L3	68F3	68K3	68G3	REMARKS
1	68F–42610–51–8D	TOP COWLING ASSY			1		1	EXCEPT FOR OCE-X
	68L–42610–51–8D	TOP COWLING ASSY		1				EXCEPT FOR OCE-X
	68H–42610–51–8D	TOP COWLING ASSY	1			1		EXCEPT FOR OCE-X
2	68F–42647–01–94	.HOLDER, CLAMP BAND	2	2	2	2	2	
3	68F–42648–01–94	.HOLDER, CLAMP BAND	1	1	1	1	1	
4	92990–06100	.WASHER, SPRING	6	6	6	6	6	
5	95380–06600	.NUT, HEXAGON	6	6	6	6	6	
6	68F–42663–00	.DAMPER	3	3	3	3	3	
7	60V–42651–01	.HOOK	2	2	2	2	2	
8	60V–42652–00	.HOOK	1	1	1	1	1	
9	97095–06016	.BOLT	6	6	6	6	6	
10	92995–06600	.WASHER	6	6	6	6	6	
11	68F–42619–00	.DAMPER, FORM	1	1	1	1	1	
12	68F–42613–00–8D	.MOLDING, AIR DUCT	1	1	1	1	1	
13	90179–06M24	.NUT	6	6	6	6	6	
14	68F–42662–00	.DAMPER	1	1	1	1	1	
15	68F–42677–50	.GRAPHIC, FRONT			1		1	
	68L–42677–50	.GRAPHIC, FRONT		1				
	68H–42677–50	.GRAPHIC, FRONT	1			1		
16	68F–42687–10	.EMBLEM, REAR	1	1	1	1	1	
17	68F–W0070–50	.GRAPHIC SET	1	1	1	1	1	
18	68F–42681–50	.MARK, COWLING	1	1	1	1	1	
19	68F–42682–50	.MARK, COWLING	1	1	1	1	1	
20	68F–42678–50	.GRAPHIC, REAR			1		1	
	68L–42678–50	.GRAPHIC, REAR		1				
	68H–42678–50	.GRAPHIC, REAR	1			1		
21	68F–42677–60	.GRAPHIC, FRONT	1	1	1	1	1	

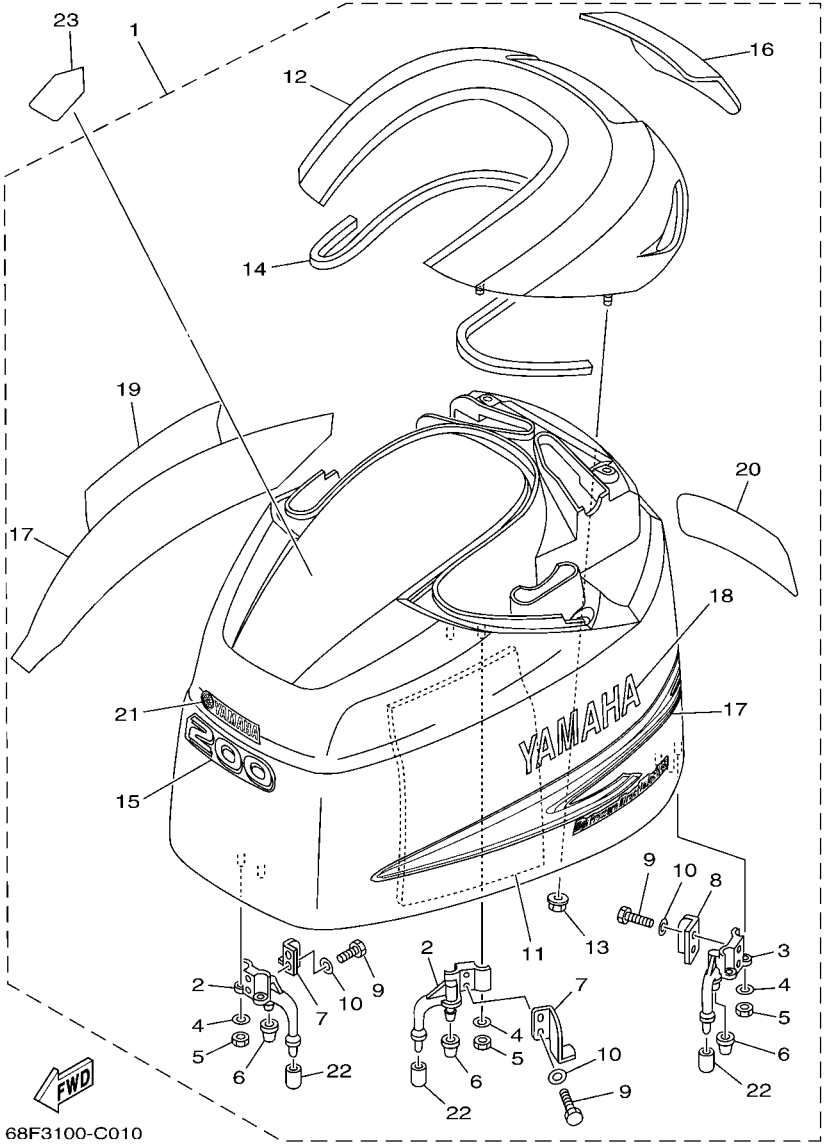

FIG. 1 TOP COWLING 1

REF. NO.	PART NO.	DESCRIPTION	68H3	68L3	68F3	68K3	68G3	REMARKS
22	67F–13448–00	.CAP	3	3	3	3	3	
23	68F–13434–00	LABEL, CAUTION	1	1	1	1	1	

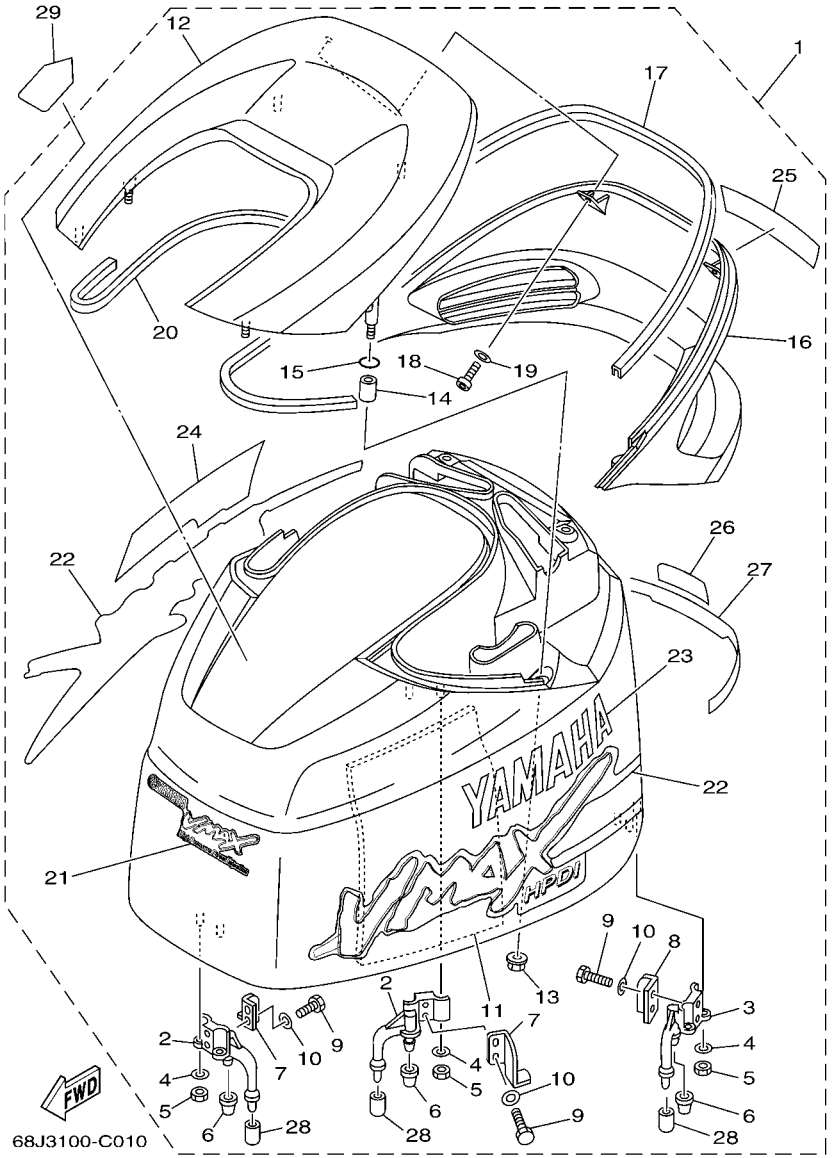

FIG. 2 TOP COWLING 2

REF. NO.	PART NO.	DESCRIPTION	68H3	68L3	68F3	68K3	68G3	REMARKS
1	60F–42610–N1–NA	TOP COWLING ASSY			1		1	VMAX, FOR OCE-X
	68M–42610–N1–NA	TOP COWLING ASSY		1				VMAX, FOR OCE-X
	68J–42610–N1–NA	TOP COWLING ASSY	1			1		VMAX, FOR OCE-X
2	68F–42647–01–94	.HOLDER, CLAMP BAND	2	2	2	2	2	
3	68F–42648–01–94	.HOLDER, CLAMP BAND	1	1	1	1	1	
4	92990–06100	.WASHER, SPRING	6	6	6	6	6	
5	95380–06600	.NUT, HEXAGON	6	6	6	6	6	
6	68F–42663–00	.DAMPER	3	3	3	3	3	
7	60V–42651–01	.HOOK	2	2	2	2	2	
8	60V–42652–00	.HOOK	1	1	1	1	1	
9	97095–06016	.BOLT	6	6	6	6	6	
10	92995–06600	.WASHER	6	6	6	6	6	
11	68F–42619–00	.DAMPER, FORM	1	1	1	1	1	
12	68J–42613–00–3P	.MOLDING, AIR DUCT	1	1	1	1	1	
13	90179–06M24	.NUT	6	6	6	6	6	
14	90387–06011	.COLLAR	2	2	2	2	2	
15	93210–06270	.O-RING	2	2	2	2	2	
16	68J–42636–00–3P	.LOUVER 2	1	1	1	1	1	
17	68J–42662–00	.DAMPER	1	1	1	1	1	
18	97780–50616	.SCREW, TAPPING	4	4	4	4	4	
19	92990–05200	.WASHER, PLAIN	4	4	4	4	4	
20	68F–42662–00	.DAMPER	1	1	1	1	1	
21	68J–42677–N0	.GRAPHIC, FRONT	1	1	1	1	1	
22	68J–W0070–N0	.GRAPHIC SET	1	1	1	1	1	
23	68J–42681–N0	.MARK, COWLING	1	1	1	1	1	
24	68J–42682–N0	.MARK, COWLING	1	1	1	1	1	
25	68J–42683–N0	.MARK, COWLING	1	1	1	1	1	

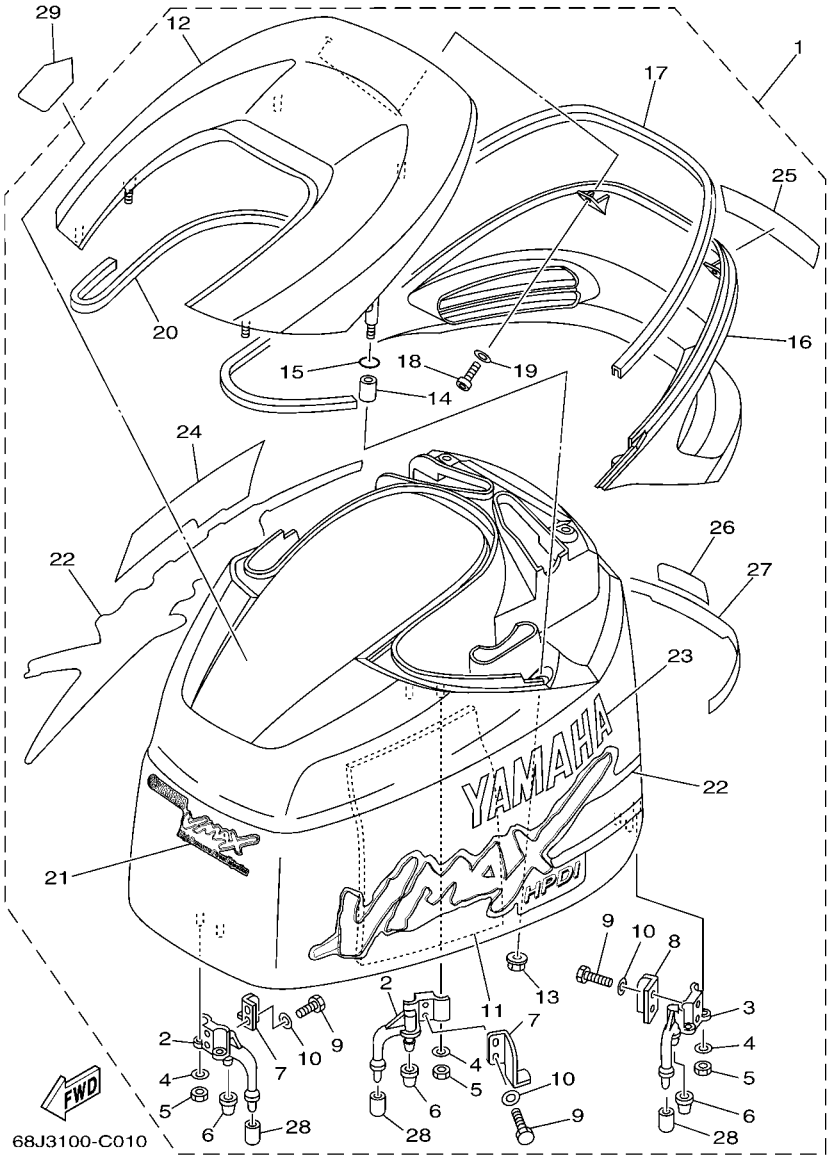

FIG. 2 TOP COWLING 2

REF. NO.	PART NO.	DESCRIPTION	68H3	68L3	68F3	68K3	68G3	REMARKS
26	60F–42678–N0	.GRAPHIC, REAR			1		1	
	68M–42678–N0	.GRAPHIC, REAR		1				
	68J–42678–N0	.GRAPHIC, REAR	1			1		
27	68J–4267A–N0	.GRAPHIC, REAR 2	1	1	1	1	1	
28	67F–13448–00	.CAP	3	3	3	3	3	
29	68F–13434–00	LABEL, CAUTION	1	1	1	1	1	

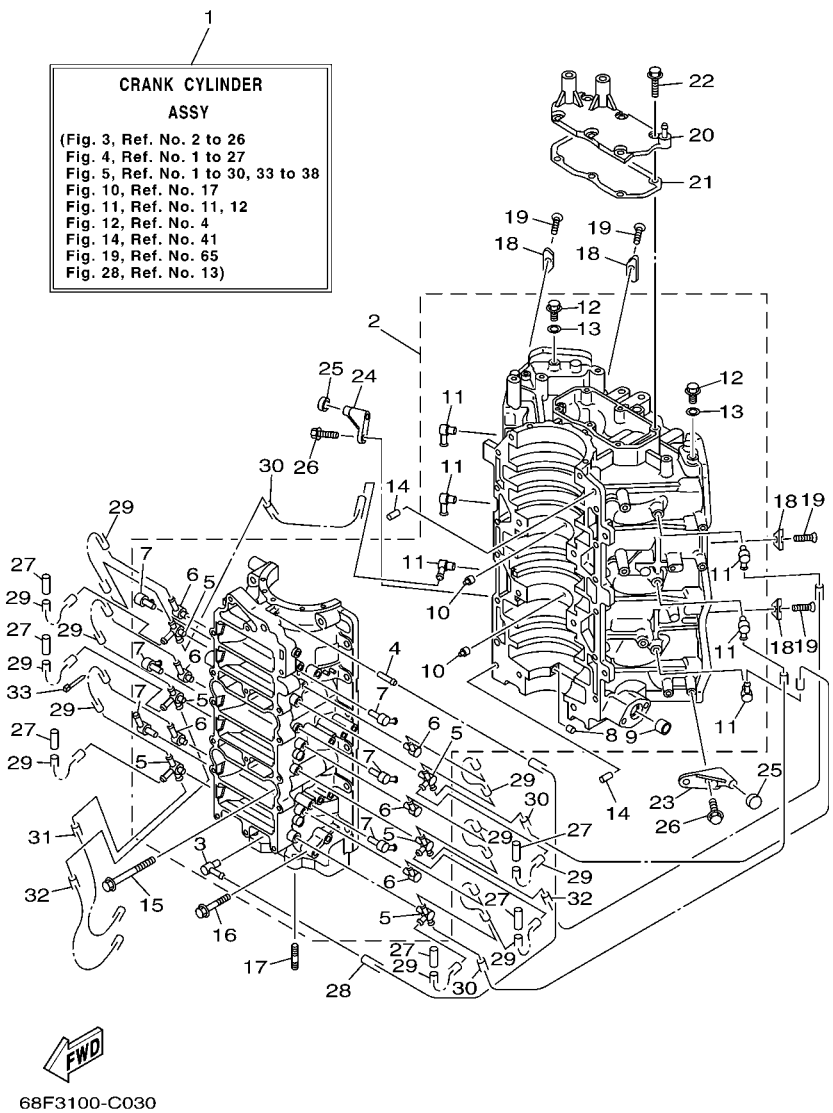

FIG. 3 CYLINDER. CRANKCASE 1

REF. NO.	PART NO.	DESCRIPTION	68H3	68L3	68F3	68K3	68G3	REMARKS
1	68F–W0090–13–1S	CRANK CYLINDER ASSY			1		1	
	68L–W0090–12–1S	CRANK CYLINDER ASSY		1				
	68H–W0090–13–1S	CRANK CYLINDER ASSY	1			1		
2	68F–15100–00–1S	CRANKCASE ASSY			1		1	
	68L–15100–00–1S	CRANKCASE ASSY		1				
	68H–15100–00–1S	CRANKCASE ASSY	1			1		
3	6E5–11372–01	.NIPPLE, HOSE	1	1	1	1	1	
4	624–14485–00	.PIPE, JOINT	1	1	1	1	1	
5	68F–11372–01	.NIPPLE, HOSE	6	6	6	6	6	
6	650–11370–01	.CHECK VALVE ASSY	6	6	6	6	6	
7	68F–13552–00	.NOZZLE	6	6	6	6	6	
8	90384–06M07	.BUSH, BIMETAL FORMED	1	1	1	1	1	
9	90384–14M09	.BUSH, BIMETAL FORMED	1	1	1	1	1	
10	663–11518–01	.LOCK, BEARING	2	2	2	2	2	
11	646–11370–01	.CHECK VALVE ASSY	6	6	6	6	6	
12	90340–14M00	.PLUG, STRAIGHT SCREW	2	2	2	2	2	
13	90430–14115	.GASKET	2	2	2	2	2	
14	93608–12063	PIN, DOWEL	2	2	2	2	2	
15	90105–10M20	BOLT, FLANGE	8	8	8	8	8	
16	90119–08M94	BOLT, WITH WASHER	12	12	12	12	12	
17	90116–08M45	BOLT, STUD	2	2	2	2	2	
18	6E5–11325–00	ANODE	8	8	8	8	8	
19	98780–04015	SCREW, FLAT HEAD	8	8	8	8	8	
20	68F–11371–00–1S	COVER	1	1	1	1	1	
21	68F–11381–00	GASKET 1	1	1	1	1	1	
22	90119–06MA2	BOLT, WITH WASHER	6	6	6	6	6	
23	6E5–42761–00–1S	STOPPER	1	1	1	1	1	

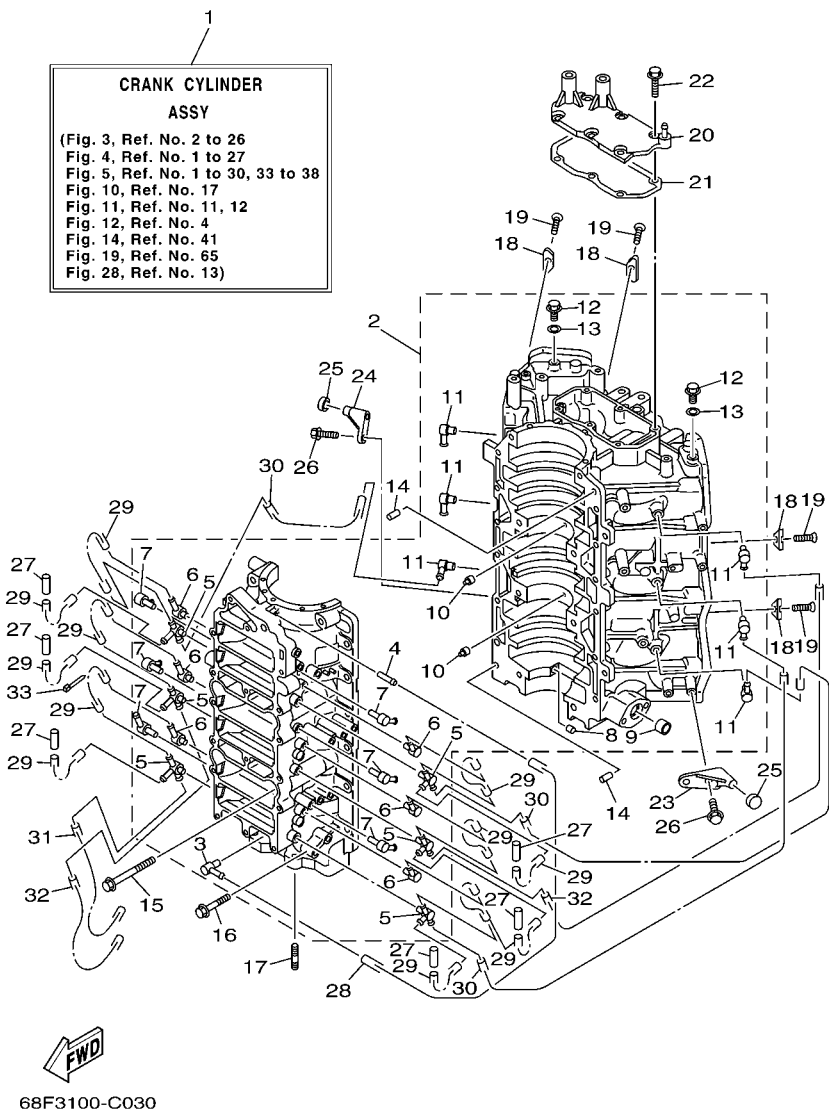

FIG. 3 CYLINDER. CRANKCASE 1

REF. NO.	PART NO.	DESCRIPTION	68H3	68L3	68F3	68K3	68G3	REMARKS
24	6E5–42762–00–1S	STOPPER	1	1	1	1	1	
25	68F–44533–00	DAMPER, UPPER MOUNT RUBBER	2	2	2	2	2	
26	90119–06MA2	BOLT, WITH WASHER	4	4	4	4	4	
27	90445–07M03	HOSE (L34)	6	6	6	6	6	
28	90445–07M10	HOSE (L510)	1	1	1	1	1	
29	90445–07MA6	HOSE (L90)	12	12	12	12	12	
30	90445–07MA4	HOSE (L280)	3	3	3	3	3	
31	90445–07M45	HOSE (L340)	1	1	1	1	1	
32	90445–07M27	HOSE (L310)	2	2	2	2	2	
33	90464–07M20	CLAMP	1	1	1	1	1	

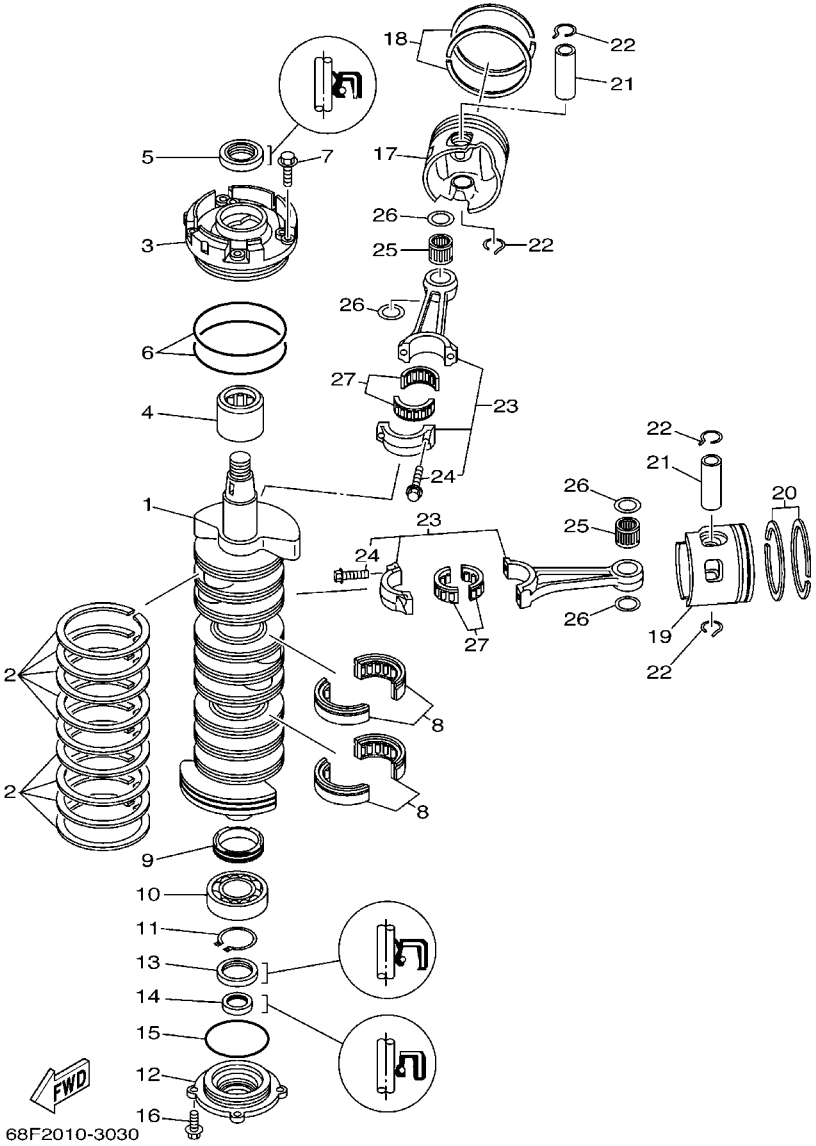

FIG. 4 CRANKSHAFT. PISTON

REF. NO.	PART NO.	DESCRIPTION	68H3	68L3	68F3	68K3	68G3	REMARKS
1	68F–11411–01	CRANKSHAFT	1	1	1	1	1	
2	6E5–11447–00	SEAL, CRANK	9	9	9	9	9	
3	68F–15163–00–94	HOUSING, BEARING 1	1	1	1	1	1	
4	93311–940U3	BEARING	1	1	1	1	1	
5	93102–40M14	OIL SEAL	1	1	1	1	1	
6	93211–04001	O-RING	2	2	2	2	2	
7	90119–06MA3	BOLT, WITH WASHER	4	4	4	4	4	
8	93310–954U1	BEARING	2	2	2	2	2	
9	6R3–11536–00	GEAR, DRIVE	1	1	1	1	1	
10	93306–208U0	BEARING	1	1	1	1	1	
11	93410–40M03	CIRCLIP	1	1	1	1	1	
12	6G5–15359–00–94	HOUSING, OIL SEAL	1	1	1	1	1	
13	93102–35M61	OIL SEAL	1	1	1	1	1	
14	93101–22M15	OIL SEAL	1	1	1	1	1	
15	93210–74M35	O-RING	1	1	1	1	1	
16	90119–06MA2	BOLT, WITH WASHER	4	4	4	4	4	
17	68F–11631–01–85	PISTON (STD)	3	3	3	3	3	
	68F–11635–01	PISTON (0.25MM O/S)	3	3	3	3	3	AP
	68F–11636–01	PISTON (0.50MM O/S)	3	3	3	3	3	AP
18	68F–11603–01	PISTON RING SET (STD)	3	3	3	3	3	
	68F–11604–01	PISTON RING SET (0.25MM O/S)	3	3	3	3	3	AP
	68F–11605–01	PISTON RING SET (0.50MM O/S)	3	3	3	3	3	AP
19	68F–11642–01–85	PISTON 2 (STD)	3	3	3	3	3	
	68F–11645–01	PISTON 2 (0.25MM O/S)	3	3	3	3	3	AP
	68F–11646–01	PISTON 2 (0.50MM O/S)	3	3	3	3	3	AP
20	68F–11603–01	PISTON RING SET (STD)	3	3	3	3	3	
	68F–11604–01	PISTON RING SET (0.25MM O/S)	3	3	3	3	3	AP

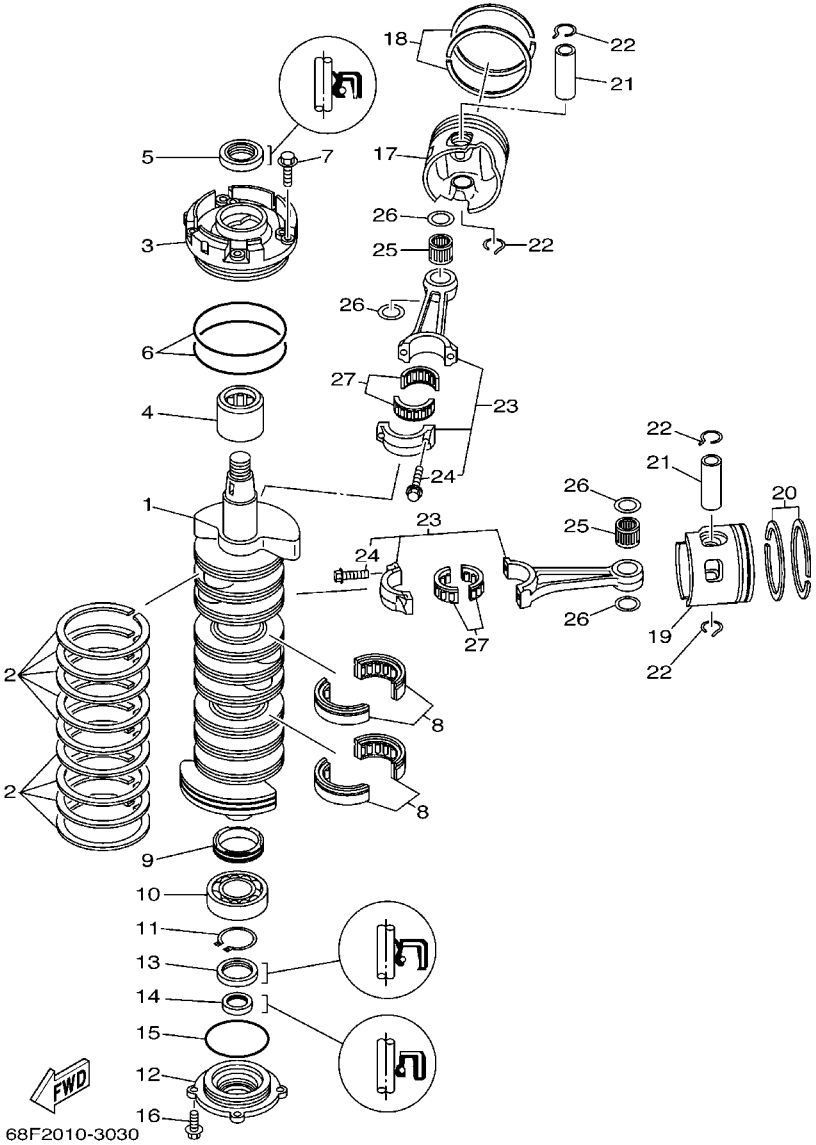

FIG. 4 CRANKSHAFT. PISTON

REF. NO.	PART NO.	DESCRIPTION	68H3	68L3	68F3	68K3	68G3	REMARKS
20	68F–11605–01	PISTON RING SET (0.50MM O/S)	3	3	3	3	3	AP
21	6R5–11633–10	PIN, PISTON	6	6	6	6	6	
22	6R5–11634–10	CLIP, PISTON PIN	12	12	12	12	12	
23	6R5–11650–10	CONNECTING ROD ASSY	6		6	6	6	
	68L–11650–00	CONNECTING ROD ASSY		6				
24	90109–08022	.BOLT	2	2	2	2	2	
25	93310–32337	BEARING	6	6	6	6	6	
26	90201–23M01	WASHER, PLATE	12	12	12	12	12	
27	93310–836U0	BEARING	6	6	6	6	6	

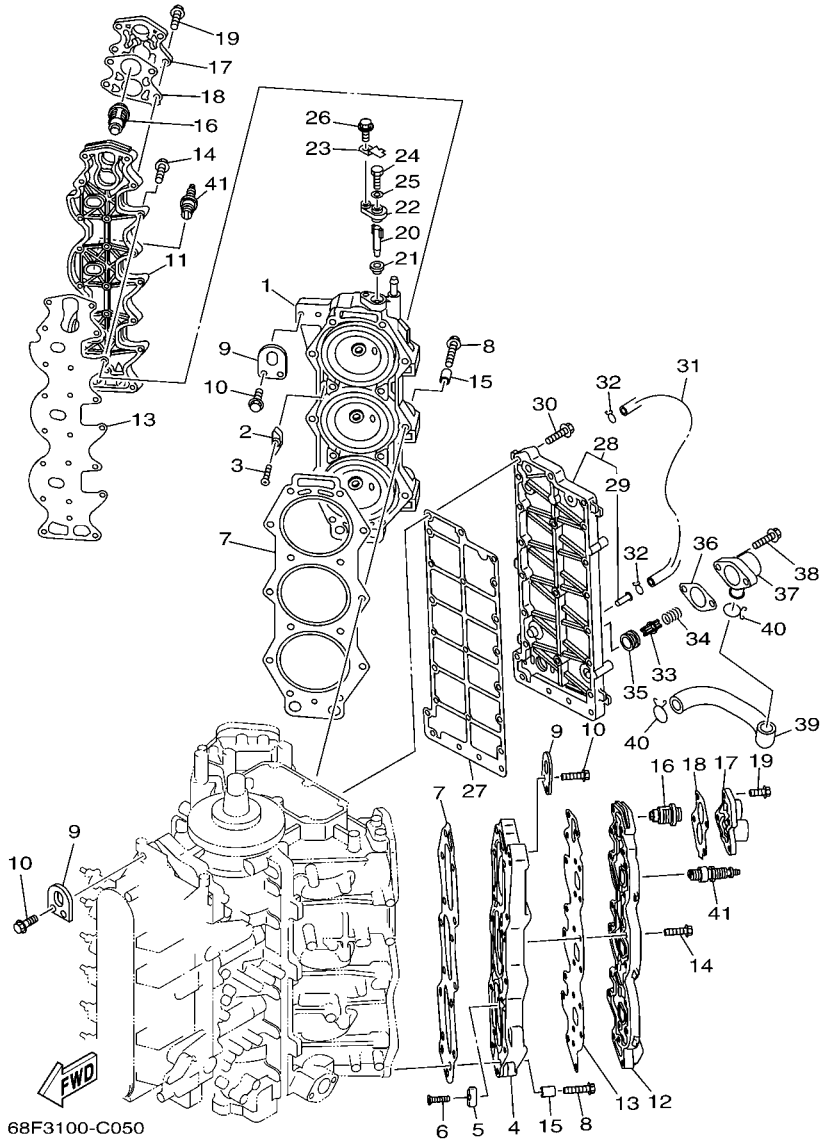

FIG. 5 CYLINDER. CRANKCASE 2

REF. NO.	PART NO.	DESCRIPTION	68H3	68L3	68F3	68K3	68G3	REMARKS
1	68F–11111–00–94	HEAD, CYLINDER 1	1	1	1	1	1	
2	6E5–11325–00	ANODE	3	3	3	3	3	
3	98780–04015	SCREW, FLAT HEAD	3	3	3	3	3	
4	68F–11121–00–94	HEAD, CYLINDER 2	1	1	1	1	1	
5	6E5–11325–00	ANODE	4	4	4	4	4	
6	98780–04015	SCREW, FLAT HEAD	4	4	4	4	4	
7	68F–11181–00	GASKET, CYLINDER HEAD 1	2	2	2	2	2	
8	90119–08MA8	BOLT, WITH WASHER	28	28	28	28	28	
9	68F–11119–00	HANGER, ENGINE	3	3	3	3	3	
10	90119–06MA2	BOLT, WITH WASHER	5	5	5	5	5	
11	68F–11191–00–1S	COVER, CYLINDER HEAD 1	1	1	1	1	1	
12	68F–11192–00–1S	COVER, CYLINDER HEAD 2	1	1	1	1	1	
13	68F–11193–01	GASKET, HEAD COVER 1	2	2	2	2	2	
14	90119–06MA4	BOLT, WITH WASHER	36	36	36	36	36	
15	99590–10114	PIN, DOWEL	4	4	4	4	4	
16	6E5–12411–30	THERMOSTAT	2	2	2	2	2	
17	688–12413–00–1S	COVER, THERMOSTAT	2	2	2	2	2	
18	688–12414–A1	GASKET, COVER	2	2	2	2	2	
19	90119–06MA6	BOLT, WITH WASHER	8	8	8	8	8	
20	62Y–11325–00	ANODE	1	1	1	1	1	
21	66M–11328–00	GROMMET, ANODE	1	1	1	1	1	
22	66M–11327–00–94	COVER, ANODE	1	1	1	1	1	
23	66M–12535–00	PLATE	1	1	1	1	1	
24	97095–05012	BOLT	1	1	1	1	1	
25	92995–05600	WASHER	1	1	1	1	1	
26	90119–06MA2	BOLT, WITH WASHER	1	1	1	1	1	
27	68F–41114–00	GASKET, EXHAUST OUTER COVER	1	1	1	1	1	

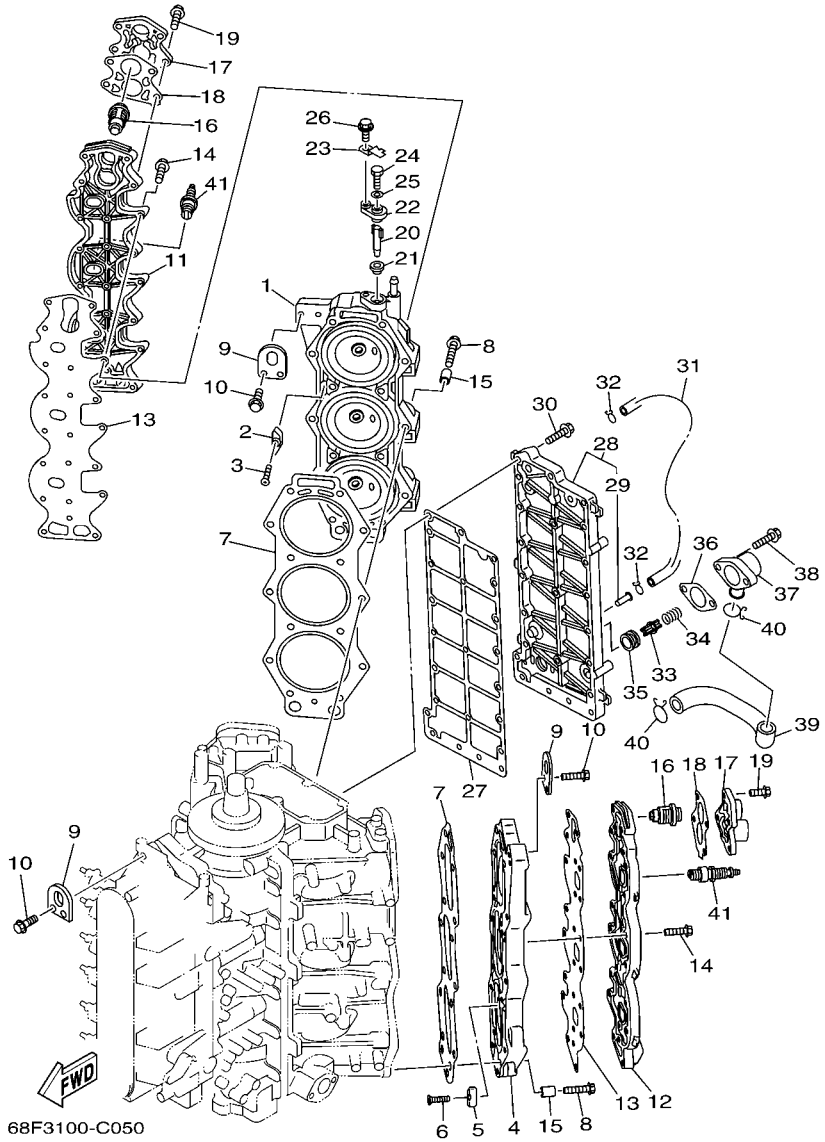

FIG. 5 CYLINDER. CRANKCASE 2

REF. NO.	PART NO.	DESCRIPTION	68H3	68L3	68F3	68K3	68G3	REMARKS
28	68F–41113–10–1S	OUTER COVER, EXHAUST	1	1	1	1	1	
29	650–24378–00	.PIPE, JOINT 4	1	1	1	1	1	
30	90119–06MA4	BOLT, WITH WASHER	23	23	23	23	23	
31	90445–09M25	HOSE (L600)	1	1	1	1	1	
32	90467–08M18	CLIP	2	2	2	2	2	
33	6G5–12416–00	VALVE, PRESSURE CONTROL	1	1	1	1	1	
34	90501–16M11	SPRING, COMPRESSION	1	1	1	1	1	
35	90480–20M05	GROMMET	1	1	1	1	1	
36	6G5–11382–A1	GASKET 2	1	1	1	1	1	
37	6G5–11372–00–1S	COVER, BYPASS 2	1	1	1	1	1	
38	90119–06MA2	BOLT, WITH WASHER	2	2	2	2	2	
39	68F–12576–00	HOSE 1	1	1	1	1	1	
40	90467–23M16	CLIP	2	2	2	2	2	
41	94702–00404	PLUG, SPARK (NGK BKR7EKU)		6	6		6	
	94702–00405	PLUG, SPARK (NGK BKR6EKU)	6			6		

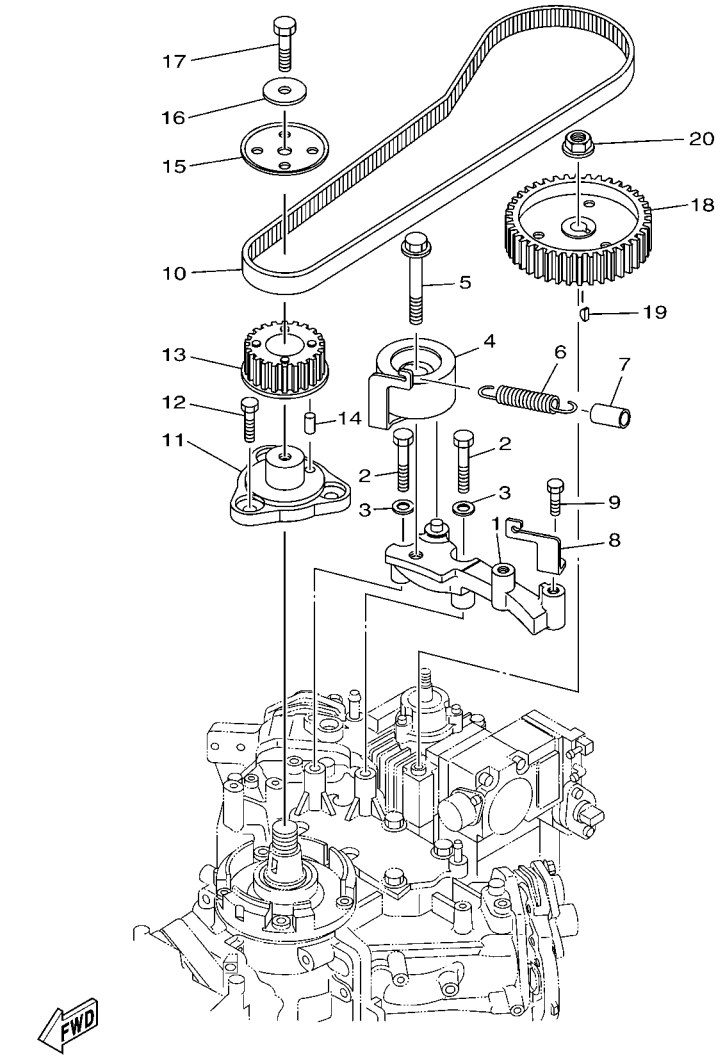

68F3100-C060

FIG. 6 FUEL PUMP DRIVE GEAR

REF. NO.	PART NO.	DESCRIPTION	68H3	68L3	68F3	68K3	68G3	REMARKS
1	68F–11598–00–94	BRACKET, TENSIONER	1	1	1	1	1	
2	97013–08045	BOLT	2	2	2	2	2	
3	92903–08600	WASHER, PLATE	2	2	2	2	2	
4	68F–11590–00	TENSIONER ASSY	1	1	1	1	1	
5	90119–10M72	BOLT, WITH WASHER	1	1	1	1	1	
6	90506–16M39	SPRING, TENSION	1	1	1	1	1	
7	90445–15M03	HOSE (L23)	1	1	1	1	1	
8	68F–11595–10	PLATE,VALVE	1	1	1	1	1	
9	97013–08012	BOLT	1	1	1	1	1	
10	68F–46241–10	V-BELT	1	1	1	1	1	
11	68F–11579–01–94	COUPLING, FLYWHEEL	1	1	1	1	1	
12	97013–08012	BOLT	3	3	3	3	3	
13	68F–11536–00–94	GEAR, DRIVE	1	1	1	1	1	
14	93605–10108	PIN, DOWEL	1	1	1	1	1	
15	60V–11557–00	WASHER 1	1	1	1	1	1	
16	90201–08M00	WASHER, PLATE	1	1	1	1	1	
17	97095–08025	BOLT	1	1	1	1	1	
18	68F–11537–00–94	GEAR, DRIVEN	1	1	1	1	1	
19	90280–03M01	KEY, WOODRUFF	1	1	1	1	1	
20	95707–08600	NUT, FLANGE	1	1	1	1	1	

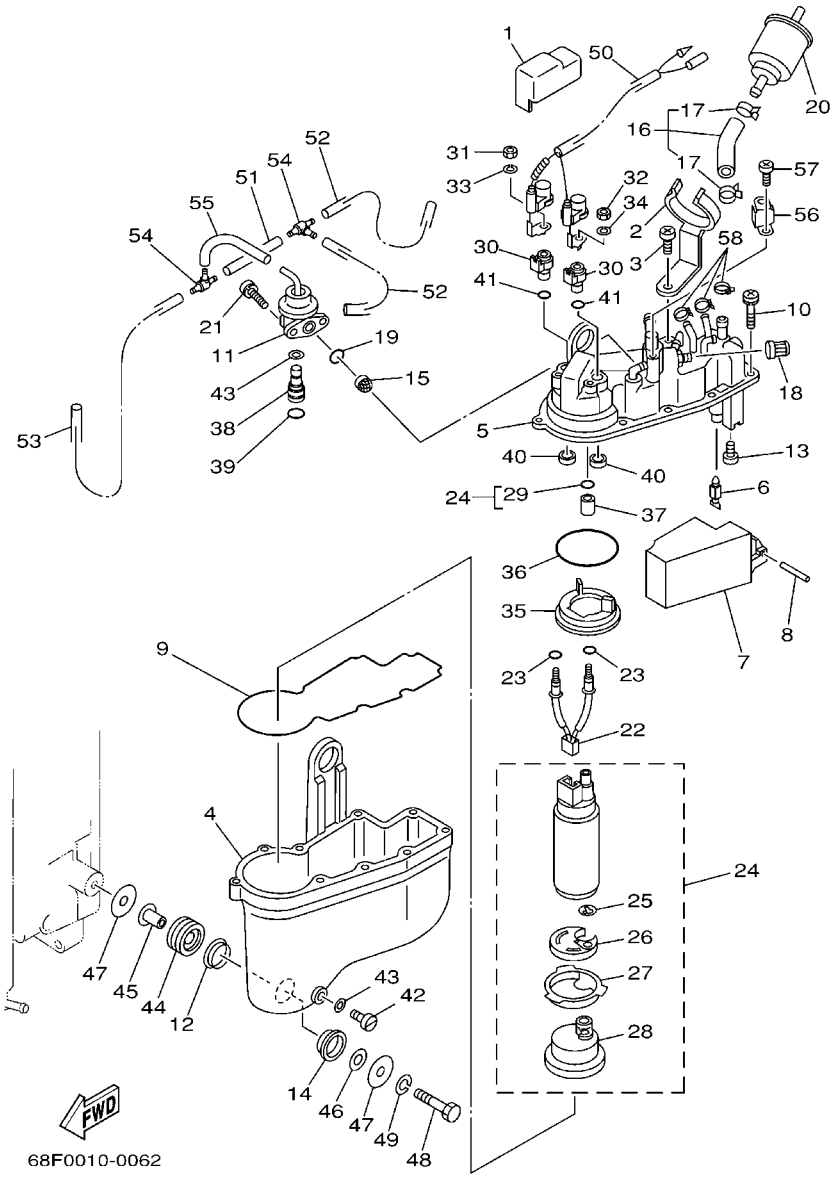

FIG. 7 VAPOR SEPARATOR 1

REF. NO.	PART NO.	DESCRIPTION	68H3	68L3	68F3	68K3	68G3	REMARKS
1	68F–13784–00	COVER, PUMP	1	1	1	1	1	
2	68F–24216–00	STAY	1	1	1	1	1	
3	68F–24473–00	SCREW	1	1	1	1	1	
4	66K–14980–00	BODY, FLOAT CHAMBER	1	1	1	1	1	
5	68F–14182–01	COVER, FLOAT CHAMBER	1	1	1	1	1	
6	65L–14546–00	VALVE, NEEDLE	1	1	1	1	1	
7	66K–14985–00	FLOAT	1	1	1	1	1	
8	66K–14548–01	PIN, FLOAT ARM	1	1	1	1	1	
9	66K–14984–00	GASKET, FLOAT CHAMBER	1	1	1	1	1	
10	65L–14125–00	SCREW	10	10	10	10	10	
11	68F–13906–00	REGULATOR, PRESSURE	1	1	1	1	1	
12	66K–14239–00	SEAL	3	3	3	3	3	
13	66K–14325–01	SCREW, PAN HEAD	2	2	2	2	2	
14	66K–14163–00	SPACER	3	3	3	3	3	
15	65L–13905–00	FILTER COMP	1	1	1	1	1	
16	68F–13971–00	PIPE, FUEL 1	1	1	1	1	1	
17	65L–24387–00	.CLIP	2	2	2	2	2	
18	65L–14966–00	CAP	1	1	1	1	1	
19	65L–24486–00	O-RING	1	1	1	1	1	
20	68F–24251–00	STRAINER 1	1	1	1	1	1	
21	66K–14245–00	SCREW, GUIDE	2	2	2	2	2	
22	68F–82509–01	WIRE, SUB LEAD	1	1	1	1	1	
23	65L–14227–00	O-RING	2	2	2	2	2	
24	68F–13907–01	FUEL PUMP COMP.	1	1	1	1	1	
25	65L–14159–00	.CLIP	1	1	1	1	1	
26	68F–13781–00	.DAMPER, PUMP	1	1	1	1	1	
27	68F–13844–00	.PLATE 2	1	1	1	1	1	

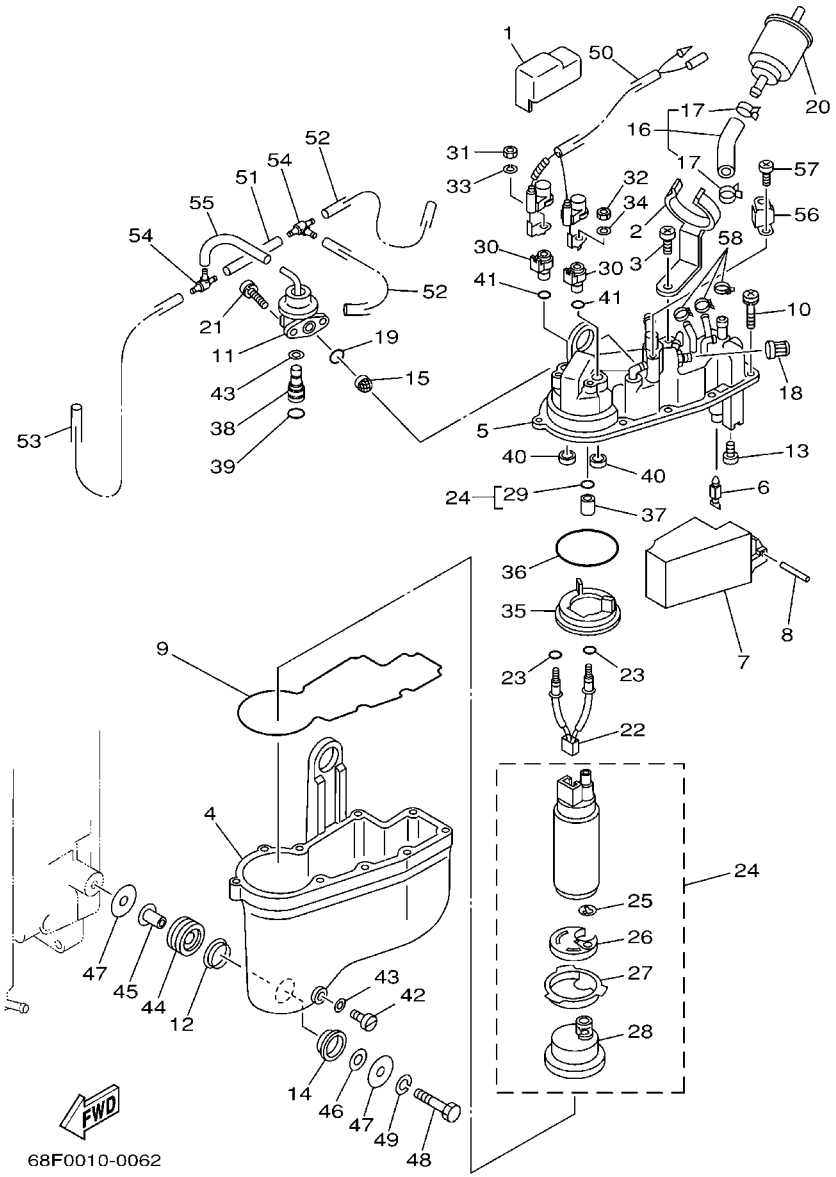

FIG. 7 VAPOR SEPARATOR 1

REF. NO.	PART NO.	DESCRIPTION	68H3	68L3	68F3	68K3	68G3	REMARKS
28	68F–13915–00	.FILTER	1	1	1	1	1	
29	65L–1416A–00	.O-RING	1	1	1	1	1	
30	66K–14271–00	INSULATOR	2	2	2	2	2	
31	65L–8182A–00	NUT	1	1	1	1	1	
32	65L–8182K–00	NUT	1	1	1	1	1	
33	65L–8182E–00	WASHER	1	1	1	1	1	
34	65L–8182F–00	WASHER	1	1	1	1	1	
35	68F–13843–00	PLATE 1	1	1	1	1	1	
36	65L–14147–00	O-RING	1	1	1	1	1	
37	68F–14274–00	CONNECTOR	1	1	1	1	1	
38	66K–24376–00	PIPE, JOINT 1	1	1	1	1	1	
39	66K–24489–00	O-RING	1	1	1	1	1	
40	68F–14271–00	INSULATOR	2	2	2	2	2	
41	65L–14397–00	O-RING	2	2	2	2	2	
42	65L–14992–00	ROD	1	1	1	1	1	
43	65L–14997–00	SEAL	2	2	2	2	2	
44	65L–24375–00	GROMMET	3	3	3	3	3	
45	65L–24397–00	COLLAR	3	3	3	3	3	
46	65L–24576–00	WASHER	3	3	3	3	3	
47	66K–24579–00	WASHER 2	6	6	6	6	6	
48	65L–24592–00	BOLT	3	3	3	3	3	
49	65L–24169–00	WASHER, LOCK	3	3	3	3	3	
50	68F–82507–00	WIRE, LEAD	1	1	1	1	1	
51	66K–13542–00	HOSE, VACUUM SENSING 1	1	1	1	1	1	
52	66K–13544–00	HOSE, VACUUM SENSING 2	2	2	2	2	2	
53	66K–13532–00	HOSE, VACUUM SENSING 3	1	1	1	1	1	
54	65L–24461–00	PIPE, JOINT	2	2	2	2	2	

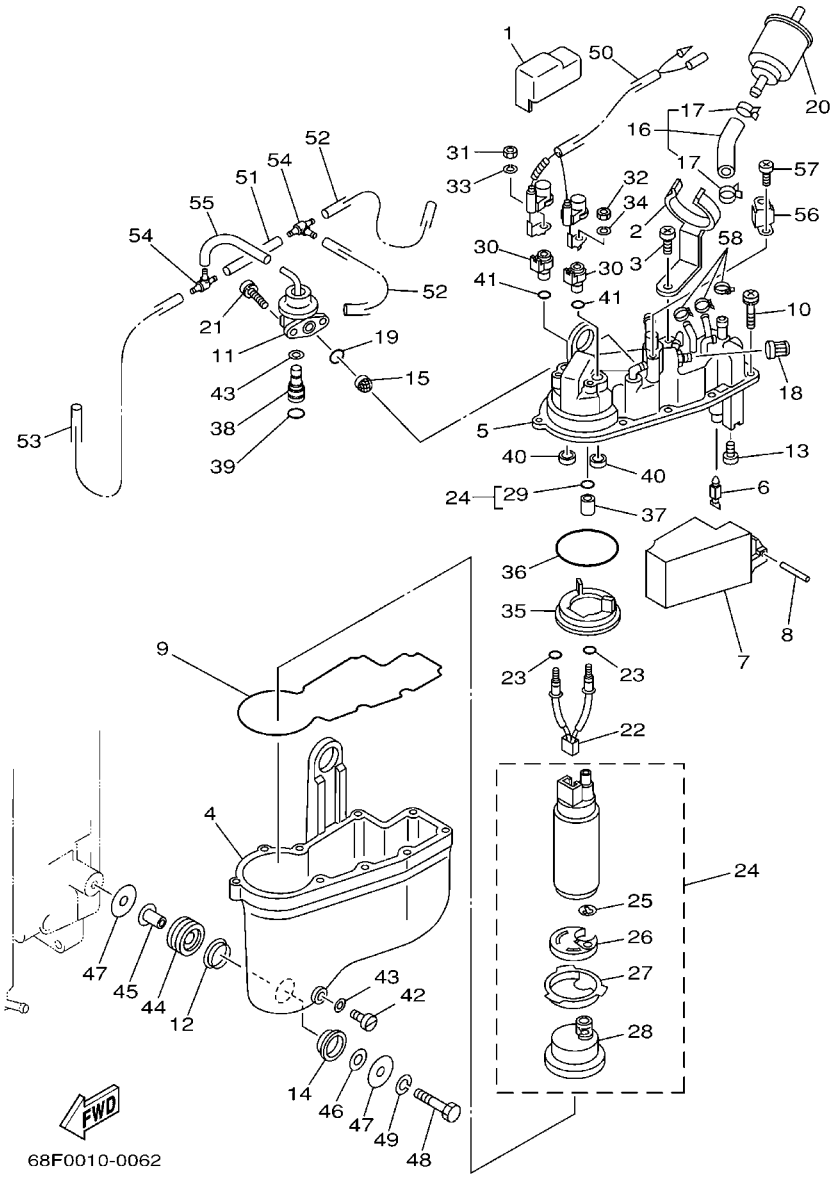

FIG. 7 VAPOR SEPARATOR 1

REF. NO.	PART NO.	DESCRIPTION	68H3	68L3	68F3	68K3	68G3	REMARKS
55	66K–13533–00	HOSE, VACUUM SENSING 4	1	1	1	1	1	
56	65L–13898–00	HOLDER	1	1	1	1	1	
57	65L–14565–00	SCREW	1	1	1	1	1	
58	90465–11M10	CLAMP	3	3	3	3	3	

FIG. 8 VAPOR SEPARATOR 2

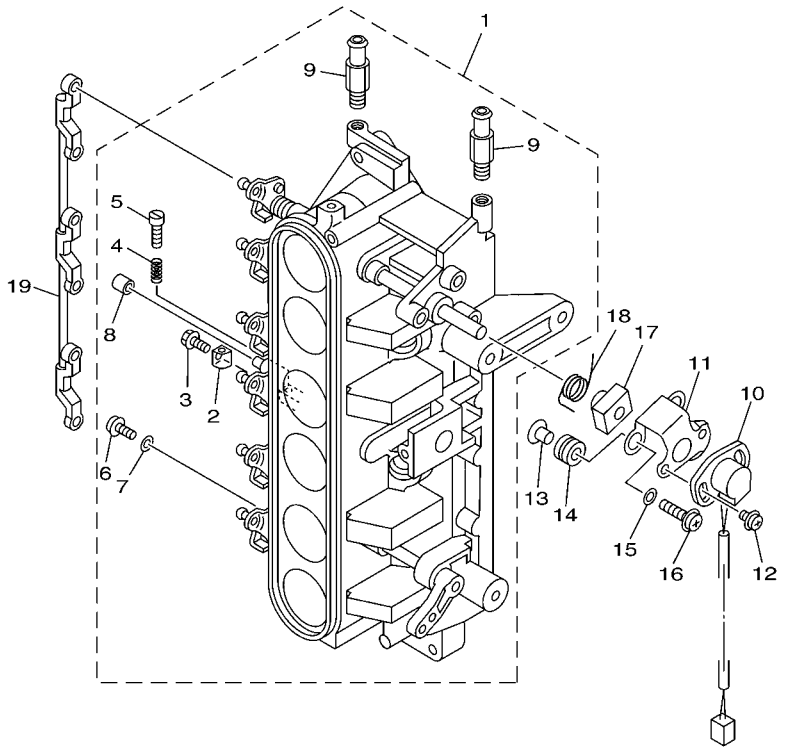

68F2010-3070

REF. NO.	PART NO.	DESCRIPTION	68H3	68L3	68F3	68K3	68G3	REMARKS
1	68F–13751–00	BODY, THROTTLE 1	1	1	1	1	1	
2	65L–14527–00	.PLATE	1	1	1	1	1	
3	65L–14565–00	.SCREW	1	1	1	1	1	
4	65L–14334–00	.SPRING, AIR ADJUSTING	1	1	1	1	1	
5	65L–14523–00	.SCREW, STOP	1	1	1	1	1	
6	6K5–14592–00	.SCREW	6	6	6	6	6	
7	90201–05552	.WASHER, PLATE	6	6	6	6	6	
8	65L–14578–00	.COLLAR	1	1	1	1	1	
9	68F–13568–00	.STUD	2	2	2	2	2	
10	61A–85885–00	THROTTLE SENSOR ASSY	1	1	1	1	1	
11	6K7–85886–00	BRACKET	1	1	1	1	1	
12	97985–05212	SCREW, WITH WASHER	2	2	2	2	2	
13	90387–05M00	COLLAR	3	3	3	3	3	
14	90480–10M23	GROMMET	3	3	3	3	3	
15	65L–14596–00	WASHER	5	5	5	5	5	
16	97985–05330	SCREW, WITH WASHER	3	3	3	3	3	
17	65L–14573–00	LEVER	1	1	1	1	1	
18	65L–14579–00	SPRING	1	1	1	1	1	
19	65L–41217–00	ROD, ACCEL. LEVER	1	1	1	1	1	

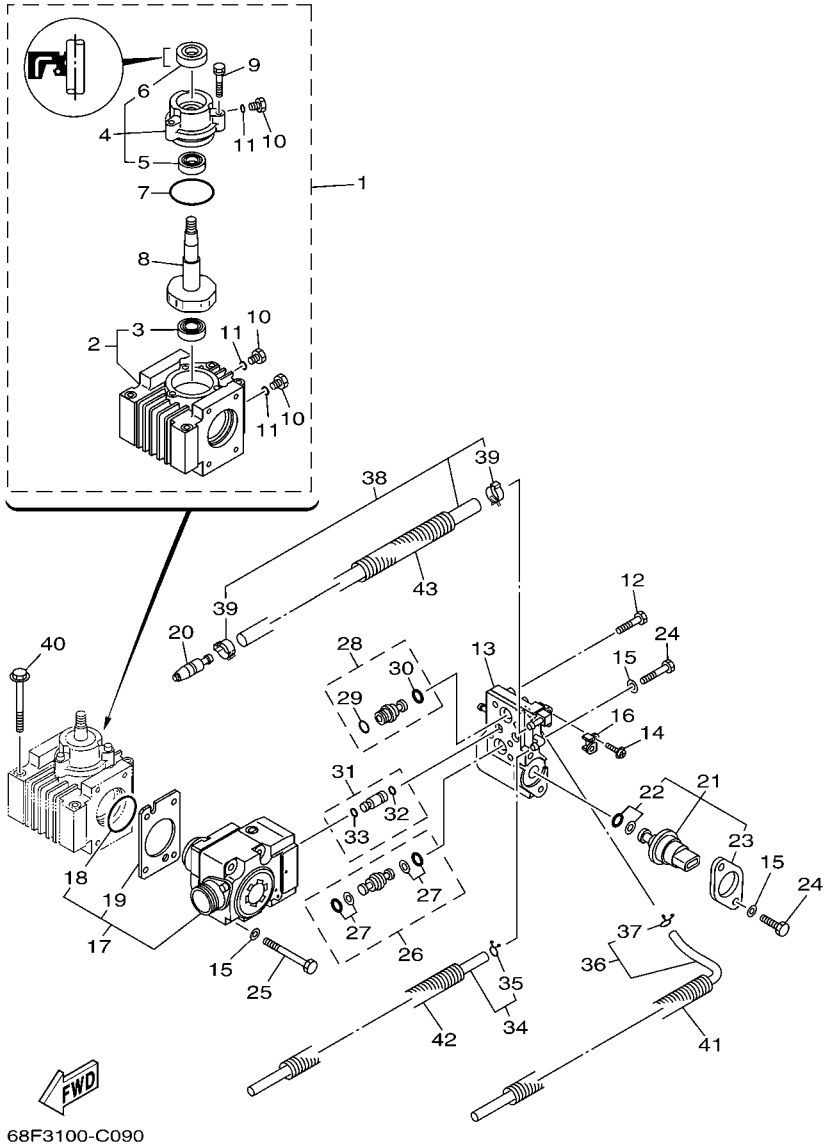

FIG. 9 FUEL INJECTION PUMP

REF. NO.	PART NO.	DESCRIPTION	68H3	68L3	68F3	68K3	68G3	REMARKS
1	68F–12170–10	CAMSHAFT ASSY 1	1	1	1	1	1	
2	68F–12424–10	.PLATE, CARTRIDGE INNER	1	1	1	1	1	
3	93306–00001	..BEARING	1	1	1	1	1	
4	68F–12173–00	.CAP, CAMSHAFT 1	1	1	1	1	1	
5	93306–001U0	..BEARING	1	1	1	1	1	
6	68F–12223–00	..SEAL	1	1	1	1	1	
7	68F–12439–00	.O-RING	1	1	1	1	1	
8	68F–12171–00	.CAMSHAFT 1	1	1	1	1	1	
9	68F–12228–00	.BOLT	3	3	3	3	3	
10	68F–13455–00	.PLUG	3	3	3	3	3	
11	68F–13473–00	.O-RING	3	3	3	3	3	
12	68F–12228–00	BOLT	2	2	2	2	2	
13	68F–13993–10	COVER, CONTROL RACK	1	1	1	1	1	
14	65L–14565–00	SCREW	1	1	1	1	1	
15	68F–24579–00	WASHER 2	8	8	8	8	8	
16	60V–13854–00	PLATE 4	1	1	1	1	1	
17	68F–13910–10	FUEL PUMP ASSY	1	1	1	1	1	
18	60V–14005–00	.RING, SEAL	1	1	1	1	1	
19	60V–14126–00	.GASKET	1	1	1	1	1	
20	68F–24300–00	FUEL PIPE JOINT	1	1	1	1	1	
21	68F–82380–01	SENSOR, PRESSURE	1	1	1	1	1	
22	68F–82384–00	.PACKING KIT	1	1	1	1	1	
23	68F–82388–00	.PLATE	1	1	1	1	1	
24	60V–24178–00	BOLT 3	4	4	4	4	4	
25	60V–24176–00	BOLT 1	4	4	4	4	4	
26	68F–13815–10	JOINT 1	1	1	1	1	1	
27	68F–2466A–10	.PACKING KIT	2	2	2	2	2	

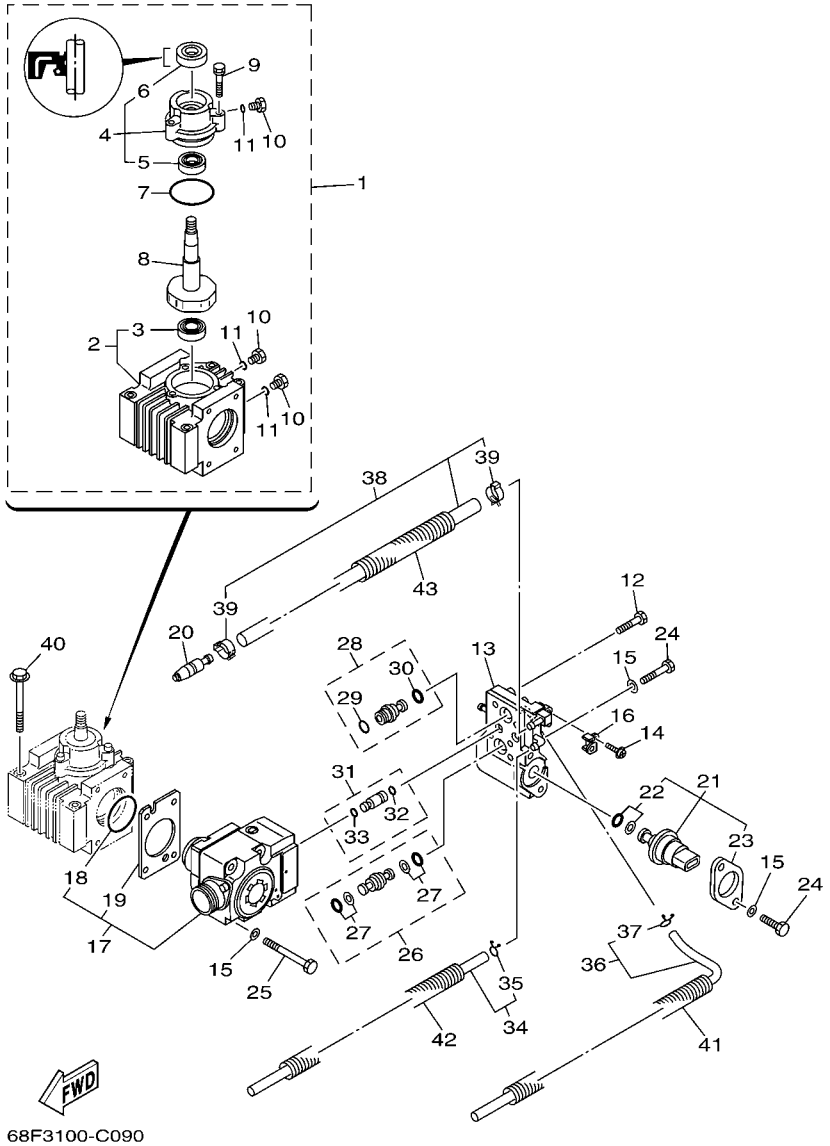

FIG. 9 FUEL INJECTION PUMP

REF. NO.	PART NO.	DESCRIPTION	68H3	68L3	68F3	68K3	68G3	REMARKS
28	68F–13816–10	JOINT 2	1	1	1	1	1	
29	68F–24486–00	.O-RING	1	1	1	1	1	
30	68F–24329–00	.SEAL	1	1	1	1	1	
31	68F–13758–10	PIPE, JOINT	2	2	2	2	2	
32	68F–13473–00	.O-RING	1	1	1	1	1	
33	60V–13473–00	.O-RING	1	1	1	1	1	
34	68F–24312–10	PIPE 2	1	1	1	1	1	
35	68F–24356–00	.CLIP, PIPE 1	1	1	1	1	1	
36	68F–24313–10	PIPE 3	1	1	1	1	1	
37	68F–24356–00	.CLIP, PIPE 1	1	1	1	1	1	
38	68F–13972–10	PIPE, FUEL 2	1	1	1	1	1	
39	65L–24387–00	.CLIP	2	2	2	2	2	
40	97513–08570	BOLT, WITH WASHER	4	4	4	4	4	
41	90446–17M72	HOSE	1	1	1	1	1	
42	90447–13007	HOSE, WITH SPRING	1	1	1	1	1	
43	90446–20MF5	HOSE	1	1	1	1	1	

FIG. 10 FUEL INJECTION NOZZLE

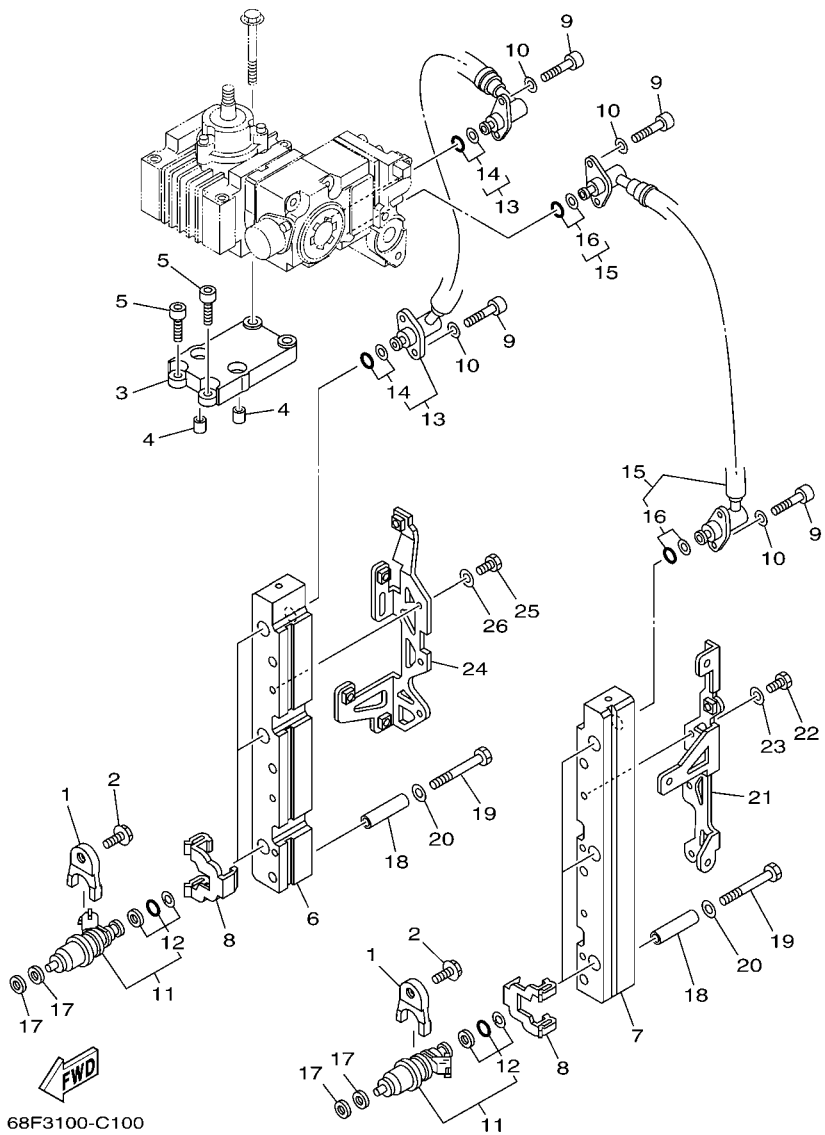

REF. NO.	PART NO.	DESCRIPTION	68H3	68L3	68F3	68K3	68G3	REMARKS
1	68F–13767–00	CAP, INJECTOR	6	6	6	6	6	
2	90119–08M60	BOLT, WITH WASHER	6	6	6	6	6	
3	60V–13782–00	STAY	1	1	1	1	1	
4	90387–08M31	COLLAR	2	2	2	2	2	
5	90110–08M04	BOLT, HEXAGON SOCKET HEAD	4	4	4	4	4	
6	68F–13161–10	PIPE, DELIVERY 1	1	1	1	1	1	
7	68F–13171–10	PIPE, DELIVERY 2	1	1	1	1	1	
8	60V–13898–10	HOLDER	6	6	6	6	6	
9	68F–24551–00	BOLT, JOINT	8	8	8	8	8	
10	68F–24576–00	WASHER	8	8	8	8	8	
11	68F–13761–00	INJECTOR ASSY	6	6	6	6	6	
12	68F–1410B–00	.PACKING KIT	1	1	1	1	1	
13	68F–13973–10	PIPE, FUEL 3	1	1	1	1	1	
14	68F–2466A–10	.PACKING KIT	2	2	2	2	2	
15	68F–13974–10	PIPE, FUEL 4	1	1	1	1	1	
16	68F–2466A–10	.PACKING KIT	2	2	2	2	2	
17	68F–13764–00	GASKET (T=2.2)	12	12	12	12	12	
18	68F–13716–00	COLLAR	4	4	4	4	4	
19	97013–08055	BOLT	6	6	6	6	6	
20	92903–08600	WASHER, PLATE	6	6	6	6	6	
21	68F–82544–10	CLAMP	1	1	1	1	1	
22	97013–06014	BOLT	2	2	2	2	2	
23	92903–06600	WASHER, PLATE	2	2	2	2	2	
24	68F–82544–20	CLAMP	1	1	1	1	1	
25	97013–06014	BOLT	2	2	2	2	2	
26	92903–06600	WASHER, PLATE	2	2	2	2	2	

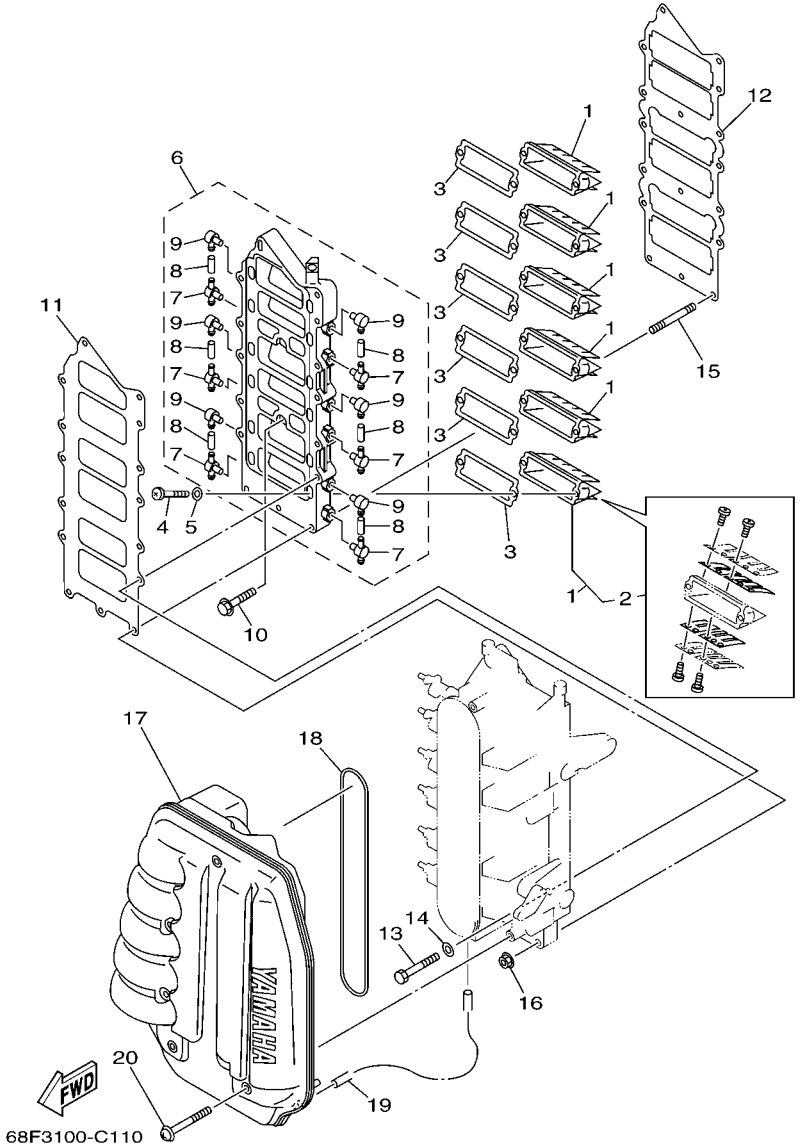

FIG. 11 INTAKE

REF. NO.	PART NO.	DESCRIPTION	68H3	68L3	68F3	68K3	68G3	REMARKS
1	65L–13610–01	REED VALVE ASSY			6		6	
	68H–13610–00	REED VALVE ASSY	6	6		6		
2	65J–W0004–01	.REED SET	1	1	1	1	1	
3	61A–13621–A0	GASKET, VALVE SEAT	6	6	6	6	6	
4	97880–05016	SCREW, PAN HEAD	12	12	12	12	12	
5	92990–05600	WASHER, PLATE	12	12	12	12	12	
6	68F–13624–00–1S	PLATE,REED VALVE	1	1	1	1	1	
7	6F6–11372–01	.NIPPLE, HOSE	6	6	6	6	6	
8	90445–07M03	.HOSE (L34)	6	6	6	6	6	
9	650–11370–01	.CHECK VALVE ASSY	6	6	6	6	6	
10	90105–06028	BOLT, FLANGE	2	2	2	2	2	
11	65L–13646–00	GASKET, MANIFOLD 2	1	1	1	1	1	
12	65L–13645–00	GASKET, MANIFOLD 1	1	1	1	1	1	
13	97013–06060	BOLT	11	11	11	11	11	
14	92903–06600	WASHER, PLATE	11	11	11	11	11	
15	95670–06660	BOLT, STUD	2	2	2	2	2	
16	90179–06M24	NUT	2	2	2	2	2	
17	60V–14440–00	SILENCER ASSY, INTAKE	1	1	1	1	1	
18	60V–14476–00	SEAL	1	1	1	1	1	
19	90445–07M44	HOSE (L250)	1	1	1	1	1	
20	90159–06M16	SCREW, WITH WASHER	6	6	6	6	6	

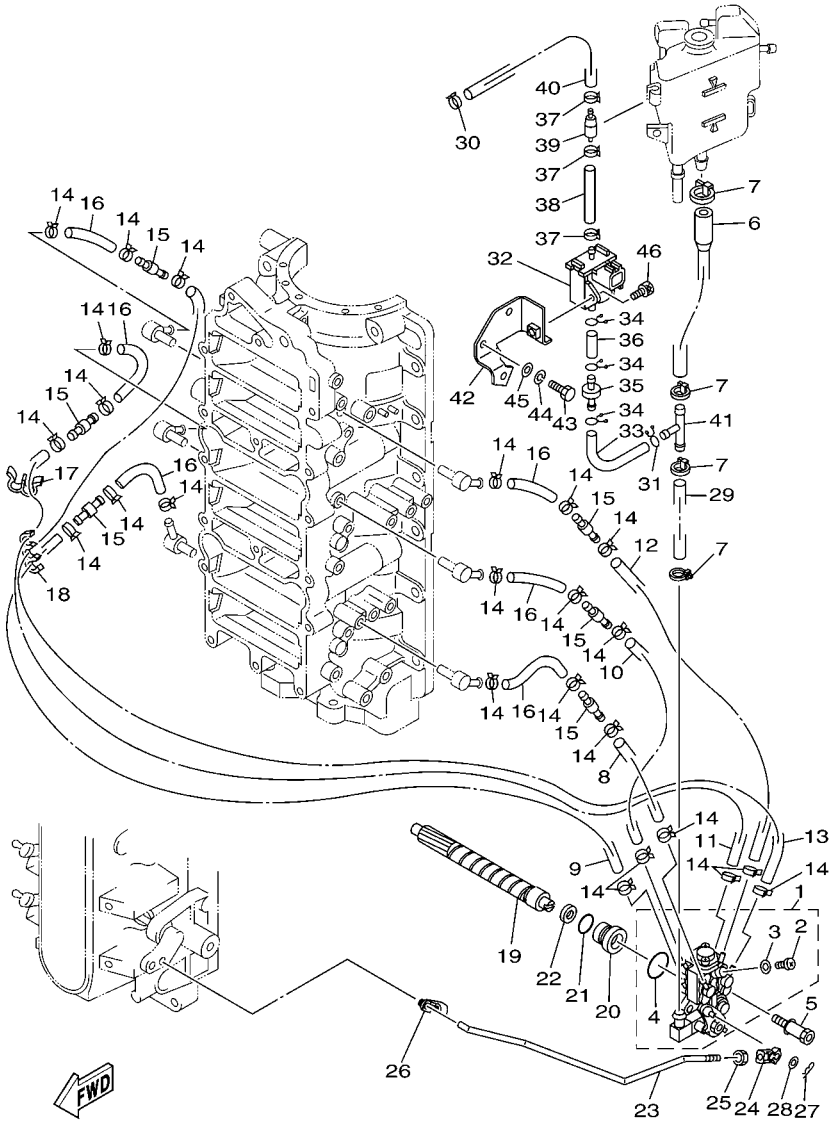

68F3100-C120

FIG. 12 OIL PUMP

REF. NO.	PART NO.	DESCRIPTION	68H3	68L3	68F3	68K3	68G3	REMARKS
1	68F–13200–00	OIL INJECTION PUMP ASSY			1		1	
	68L–13200–00	OIL INJECTION PUMP ASSY		1				
	68H–13200–00	OIL INJECTION PUMP ASSY	1			1		
2	6R3–13471–00	.PLUG, DRAIN	1	1	1	1	1	
3	6L2–13475–00	.GASKET	1	1	1	1	1	
4	93210–19M82	.O-RING	1	1	1	1	1	
5	90109–06M40	BOLT	2	2	2	2	2	
6	6G5–13416–00	PIPE, OIL 1	1	1	1	1	1	
7	90465–11M10	CLAMP	4	4	4	4	4	
8	90445–07M00	HOSE (L100)	1	1	1	1	1	
9	90445–07M09	HOSE (L380)	1	1	1	1	1	
10	90445–07MA5	HOSE (L150)	1	1	1	1	1	
11	90445–07M10	HOSE (L510)	1	1	1	1	1	
12	90445–07MA4	HOSE (L280)	1	1	1	1	1	
13	90445–07M80	HOSE (L660)	1	1	1	1	1	
14	90468–07M02	CLIP	24	24	24	24	24	
15	6R3–13183–00	VALVE, CHECK	6	6	6	6	6	
16	90445–07M04	HOSE (L50)	6	6	6	6	6	
17	90464–07M20	CLAMP	1	1	1	1	1	
18	90464–07M05	CLAMP	1	1	1	1	1	
19	6R3–11537–00	GEAR, DRIVEN	1	1	1	1	1	
20	6R3–13117–00	COLLAR, DISTANCE	1	1	1	1	1	
21	93210–13M04	O-RING	1	1	1	1	1	
22	90202–08M44	WASHER, PLATE	1	1	1	1	1	
23	67H–41241–00	ROD, LINK	1	1	1	1	1	
24	6H1–41237–00	JOINT, LINK	1	1	1	1	1	
25	95380–05600	NUT	1	1	1	1	1	

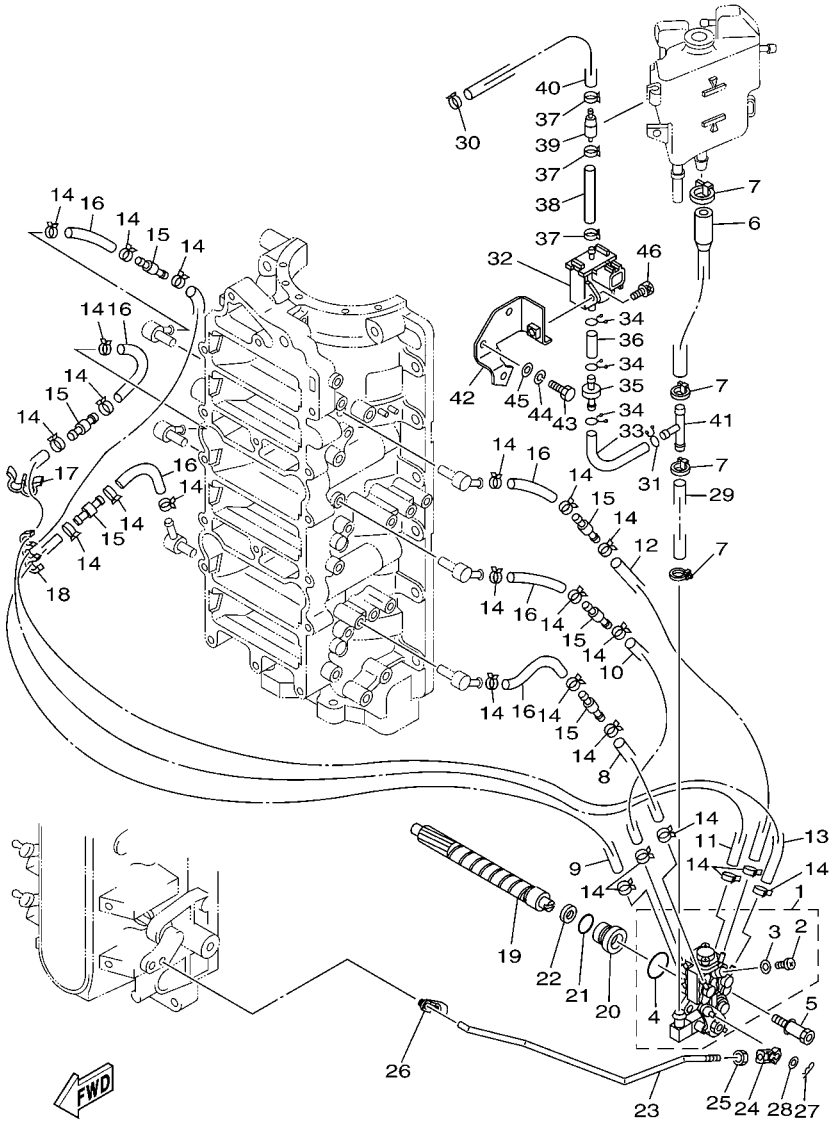

68F3100-C120

FIG. 12 OIL PUMP

REF. NO.	PART NO.	DESCRIPTION	68H3	68L3	68F3	68K3	68G3	REMARKS
26	6R5–41237–00	JOINT, LINK	1	1	1	1	1	
27	90468–05M03	CLIP	1	1	1	1	1	
28	90202–05088	WASHER, PLATE	1	1	1	1	1	
29	90445–12M14	HOSE (L50)	1	1	1	1	1	
30	90468–07M02	CLIP	1	1	1	1	1	
31	90467–08M18	CLIP	1	1	1	1	1	
32	68F–13100–00	SOLENOID PUMP ASSY	1	1	1	1	1	
33	68F–13418–00	HOSE 4	1	1	1	1	1	
34	68F–13184–00	SPRING, OIL PIPE	3	3	3	3	3	
35	68F–13440–00	FILTER ASSY	1	1	1	1	1	
36	68F–1316F–00	HOSE 1	1	1	1	1	1	
37	68F–13133–00	CLIP	3	3	3	3	3	
38	68F–1316G–00	HOSE 2	1	1	1	1	1	
39	68F–1316A–00	CHECK VALVE ASSY	1	1	1	1	1	
40	68F–13416–00	HOSE 3	1	1	1	1	1	
41	68F–14485–00	PIPE, JOINT	1	1	1	1	1	
42	68F–1319K–10	PLATE	1	1	1	1	1	
43	97095–06020	BOLT	2	2	2	2	2	
44	92995–06100	WASHER, SPRING	2	2	2	2	2	
45	92995–06600	WASHER	2	2	2	2	2	
46	90110–06M06	BOLT, HEXAGON SOCKET HEAD	1	1	1	1	1	

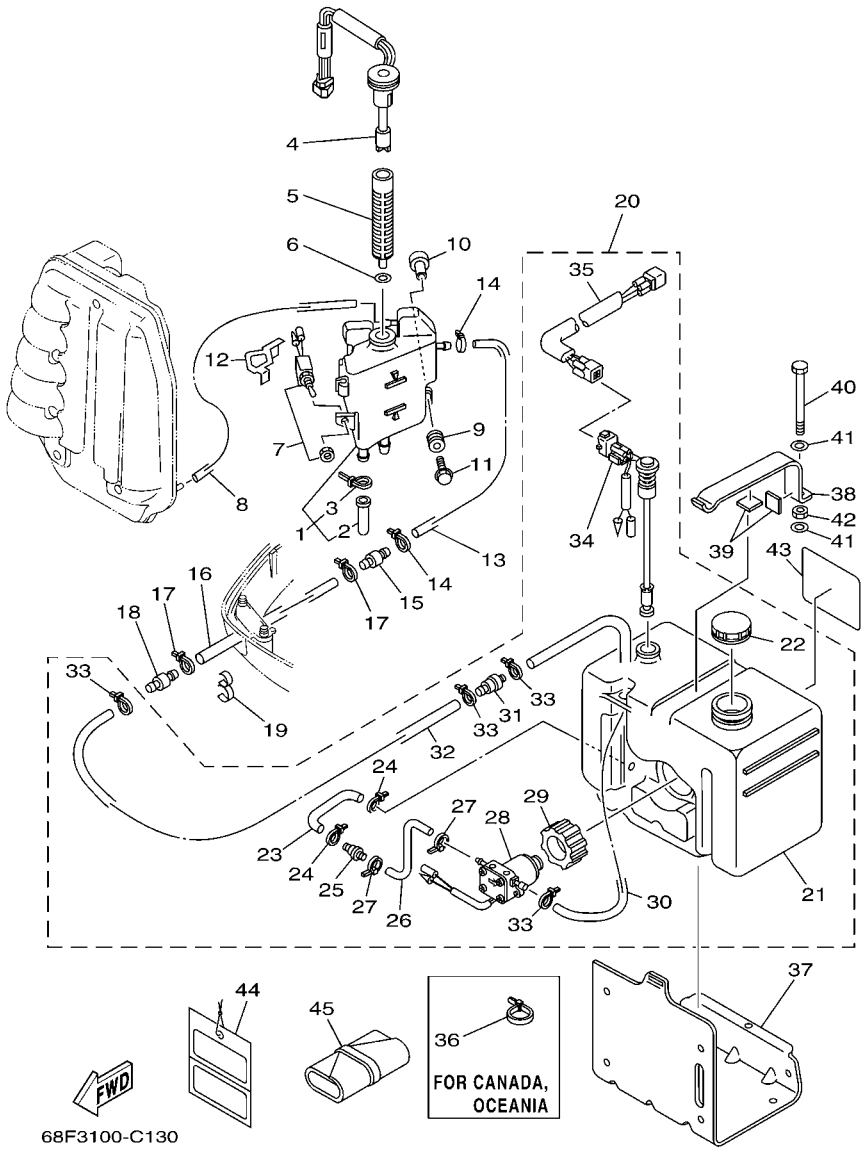

FIG. 13 OIL TANK

REF. NO.	PART NO.	DESCRIPTION	68H3	68L3	68F3	68K3	68G3	REMARKS
1	68F–21750–00	OIL TANK ASSY	1	1	1	1	1	
2	6E5–13448–00	.CAP	1	1	1	1	1	
3	90465–13M11	.CLAMP	1	1	1	1	1	
4	67H–85730–01	OIL LEVEL GAUGE ASSY	1	1	1	1	1	
5	6E5–13411–00	STRAINER, OIL	1	1	1	1	1	
6	6E5–13414–00	GASKET, STRAINER COVER	1	1	1	1	1	
7	6R3–8259E–00	SWITCH ASSY	1	1	1	1	1	
8	90445–07M43	HOSE (L600)	1	1	1	1	1	
9	6A0–82317–00	DAMPER, IGNITION COIL	3	3	3	3	3	
10	90387–06M91	COLLAR	3	3	3	3	3	
11	90119–06M65	BOLT, WITH WASHER	3	3	3	3	3	
12	68F–2174E–00	STAY, SIDE COVER 2	1	1	1	1	1	
13	6E5–24323–00	PIPE 12	1	1	1	1	1	
14	90465–11M10	CLAMP	2	2	2	2	2	
15	6E5–24379–00	PIPE, JOINT 4	1	1	1	1	1	
16	90445–12207	HOSE (L2400)	1	1	1	1	1	FOR USA,CAN,OCE
	90445–12M13	HOSE (L880)			1		1	FOR CAR
17	90465–11M10	CLAMP	2	2	2	2	2	
18	6E5–24379–00	PIPE, JOINT 4	1	1	1	1	1	
19	90464–13M34	CLAMP	1	1	1	1	1	
20	61A–21708–20	SUB OIL TANK ASSY	1	1	1	1	1	FOR CAN,OCE
	6E5–21708–10	SUB OIL TANK ASSY			1		1	FOR CAR
21	6E5–21733–20	.SUB TANK, OIL (10.5L)	1	1	1	1	1	
22	6E5–21770–03	.OIL TANK CAP ASSY	1	1	1	1	1	
23	6E5–24322–00	.PIPE 11	1	1	1	1	1	
24	90465–11M10	.CLAMP	2	2	2	2	2	
25	646–24251–02	.STRAINER 1	1	1	1	1	1	

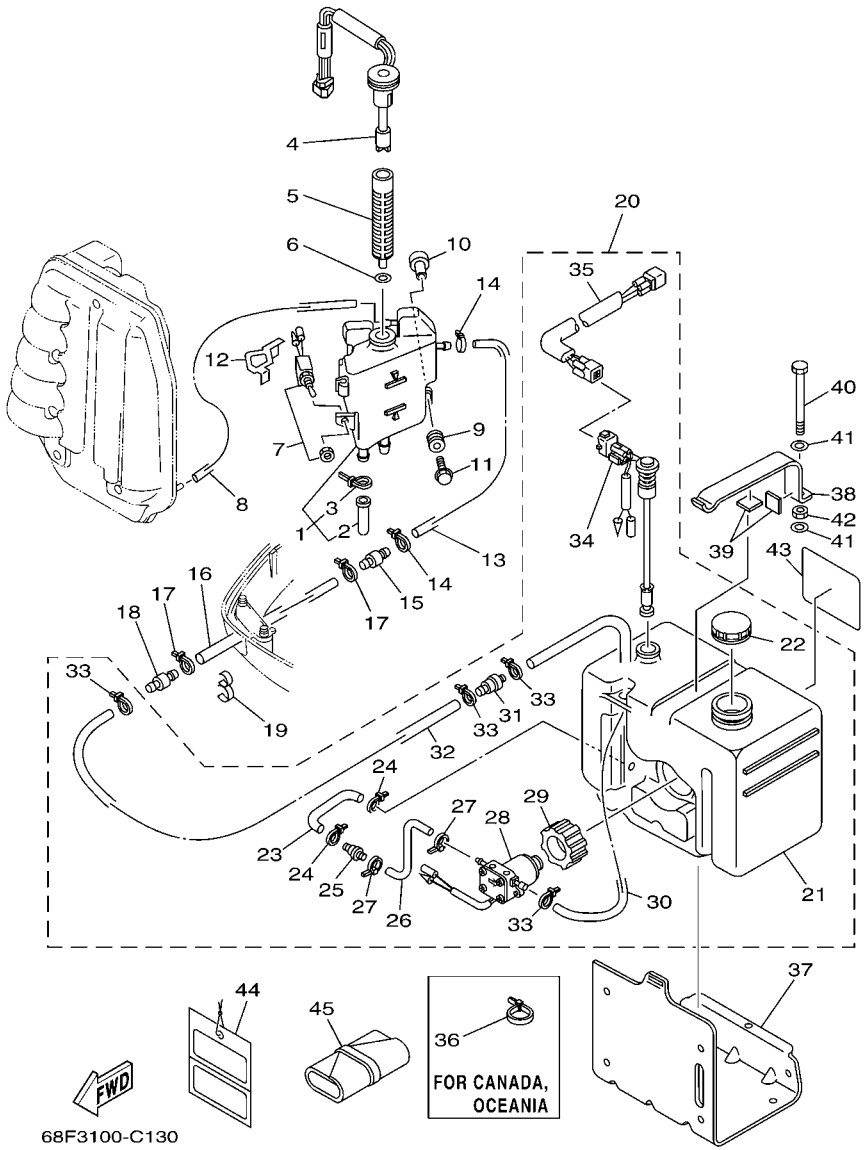

FIG. 13 OIL TANK

REF. NO.	PART NO.	DESCRIPTION	68H3	68L3	68F3	68K3	68G3	REMARKS
26	6E5–24319–01	.PIPE, OIL	1	1	1	1	1	
27	90465–11M10	.CLAMP	2	2	2	2	2	
28	6E5–81900–01	.OIL FEED PUMP ASSY	1	1	1	1	1	
29	6E5–81922–00	.GROMMET	1	1	1	1	1	
30	6E5–24321–01	.PIPE 10	1	1	1	1	1	
31	6E5–24379–00	.PIPE, JOINT 4	1	1	1	1	1	
32	90445–11M26	.HOSE (L6500)	1	1	1	1	1	FOR 61A-21708-20
	90445–11M81	.HOSE (L3000)			1		1	FOR 6E5-21708-10
33	90465–11M10	.CLAMP	4	4	4	4	4	
34	6E5–85720–04	.OIL LEVEL GAUGE ASSY	1	1	1	1	1	
35	6R3–85721–80	.WIRE, LEAD (8M)	1	1	1	1	1	FOR 61A-21708-20
	6R3–85721–30	.WIRE, LEAD (3M)			1		1	FOR 6E5-21708-10
36	90465–13M11	CLAMP	1	1	1	1	1	FOR CAN,OCE
37	6E5–21734–01–33	HOLDER, OIL SUB TANK	1	1	1	1	1	
38	6E5–21798–01–33	BRACKET, DAMPER	1	1	1	1	1	
39	6E5–21746–00	DAMPER	2	2	2	2	2	
40	97080–06100	BOLT	1	1	1	1	1	
41	92990–06600	WASHER, PLATE	2	2	2	2	2	
42	95380–06600	NUT, HEXAGON	1	1	1	1	1	
43	6E5–13437–43	MARK, CAUTION	1	1	1	1	1	FOR OCE
	6E5–13437–62	MARK, CAUTION	1		1		1	FOR CAN,CAR
44	61H–2819R–31	TAG, WARNING	1	1	1	1	1	
45	68F–28100–00	TOOL KIT	1	1	1	1	1	AP

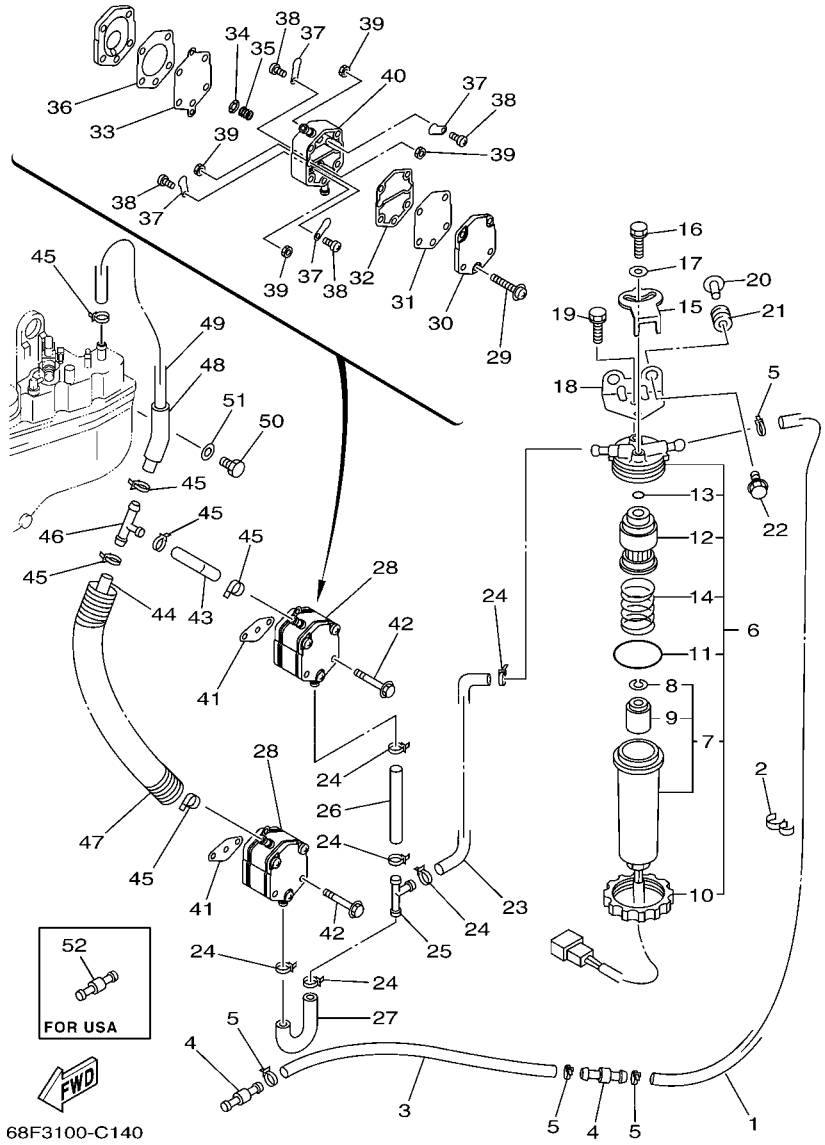

FIG. 14 FUEL 1

REF. NO.	PART NO.	DESCRIPTION	68H3	68L3	68F3	68K3	68G3	REMARKS
1	61A–24313–00	PIPE 3	1	1	1	1	1	
2	90464–13M34	CLAMP	1	1	1	1	1	
3	90445–13M17	HOSE (L2700)	1	1	1	1	1	FOR USA,CAN,OCE
	6N7–24313–00	PIPE 3			1		1	FRO CAR
4	6R3–24377–00	PIPE, JOINT 3	1	1	1	1	1	FOR USA
	6R3–24377–00	PIPE, JOINT 3	2	2	2	2	2	FOR CAN,OCE,CAR
5	90465–11M10	CLAMP	4	4	4	4	4	
6	68F–24560–00	FILTER ASSY	1	1	1	1	1	
7	68F–24562–00	.CUP, FILTER	1	1	1	1	1	
8	68F–24519–00	..CLIP	1	1	1	1	1	
9	68F–24469–00	..FLOAT, WATER LEVEL	1	1	1	1	1	
10	65L–24531–01	.NUT	1	1	1	1	1	
11	61A–24564–00	.O-RING	1	1	1	1	1	
12	68F–24563–00	.ELEMENT, FILTER	1	1	1	1	1	
13	65L–24564–00	.O-RING	1	1	1	1	1	
14	68F–24567–00	.SPRING	1	1	1	1	1	
15	60H–24558–00	HOLDER, FILTER	1	1	1	1	1	
16	97595–06416	BOLT, WITH WASHER	1	1	1	1	1	
17	90201–06068	WASHER, PLATE	1	1	1	1	1	
18	68F–24566–00	BRACKET, FILTER	1	1	1	1	1	
19	97595–06514	BOLT, WITH WASHER	1	1	1	1	1	
20	90387–06M60	COLLAR	2	2	2	2	2	
21	90480–10M23	GROMMET	2	2	2	2	2	
22	90119–06M88	BOLT, WITH WASHER	2	2	2	2	2	
23	68F–24311–00	PIPE, FUEL 1	1	1	1	1	1	
24	90465–11M10	CLAMP	6	6	6	6	6	
25	6E5–24378–00	PIPE, JOINT 3	1	1	1	1	1	

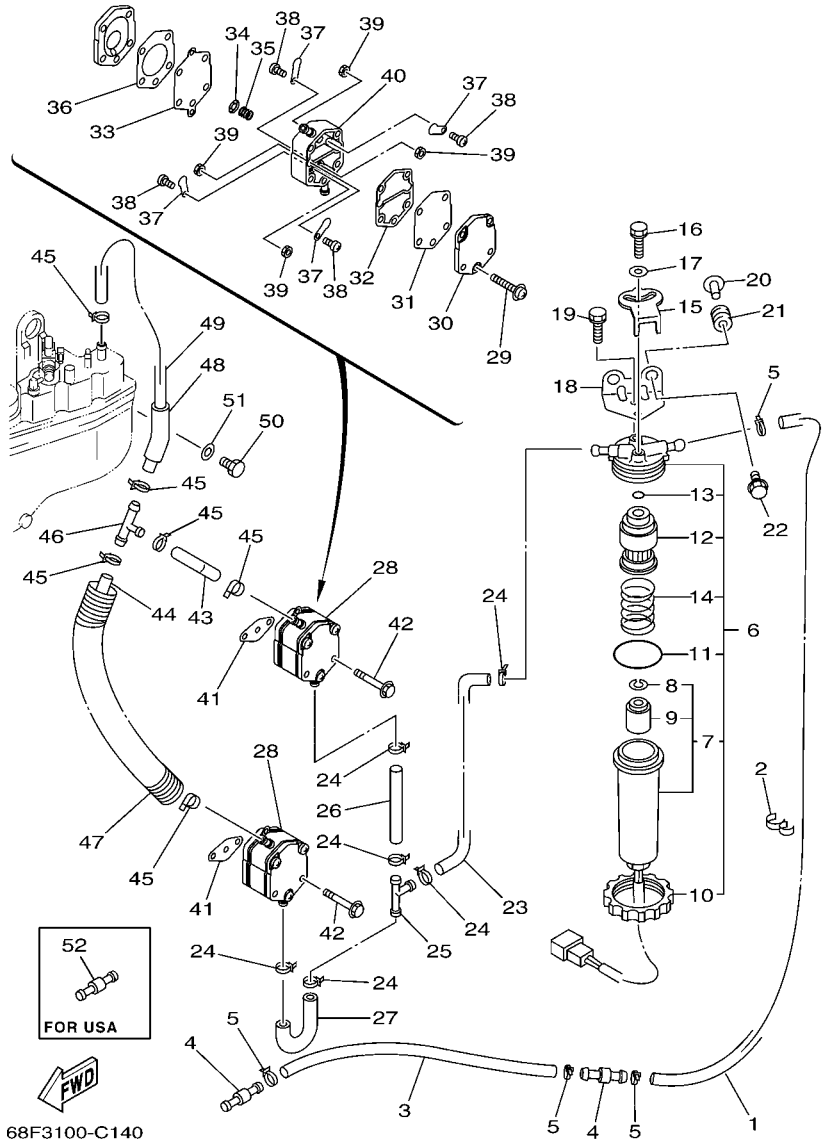

FIG. 14 FUEL 1

REF. NO.	PART NO.	DESCRIPTION	68H3	68L3	68F3	68K3	68G3	REMARKS
26	90445–13M31	HOSE (L85)	1	1	1	1	1	
27	67H–24311–00	PIPE, FUEL 1	1	1	1	1	1	
28	6E5–24410–03	FUEL PUMP ASSY	2	2	2	2	2	
29	6E5–24444–00	.SCREW	3	3	3	3	3	
30	6E5–24413–00	.BODY 2	1	1	1	1	1	
31	6E5–24471–00	.DIAPHRAGM	1	1	1	1	1	
32	6E5–24435–00	.GASKET, BODY 2	1	1	1	1	1	
33	6E5–24411–00	.DIAPHRAGM	1	1	1	1	1	
34	648–24424–00	.SEAT, SPRING	1	1	1	1	1	
35	6E5–24423–00	.SPRING, DIAPHRAGM	1	1	1	1	1	
36	6E5–24434–02	.GASKET, BODY	1	1	1	1	1	
37	6A0–24421–01	.VALVE, CHECK	4	4	4	4	4	
38	6A0–14325–00	.SCREW, PAN HEAD	4	4	4	4	4	
39	95380–03600	.NUT	4	4	4	4	4	
40	6E5–24412–10	.BODY 1	1	1	1	1	1	
41	650–24431–A0	GASKET, FUEL PUMP 1	2	2	2	2	2	
42	97595–06550	BOLT, WITH WASHER	4	4	4	4	4	
43	61U–24316–00	PIPE 6	1	1	1	1	1	
44	6E5–24313–00	PIPE 3	1	1	1	1	1	
45	90465–11M10	CLAMP	6	6	6	6	6	
46	6E5–24378–00	PIPE, JOINT 3	1	1	1	1	1	
47	6H1–83557–00	TUBE	1	1	1	1	1	
48	90446–15M07	HOSE (L60)	1	1	1	1	1	
49	90445–13M12	HOSE (L235)	1	1	1	1	1	
50	97095–06012	BOLT	1	1	1	1	1	
51	92995–06600	WASHER	1	1	1	1	1	
52	6R3–24377–10	PIPE, JOINT 3	1	1	1	1	1	FOR USA

FIG. 15 FUEL 2

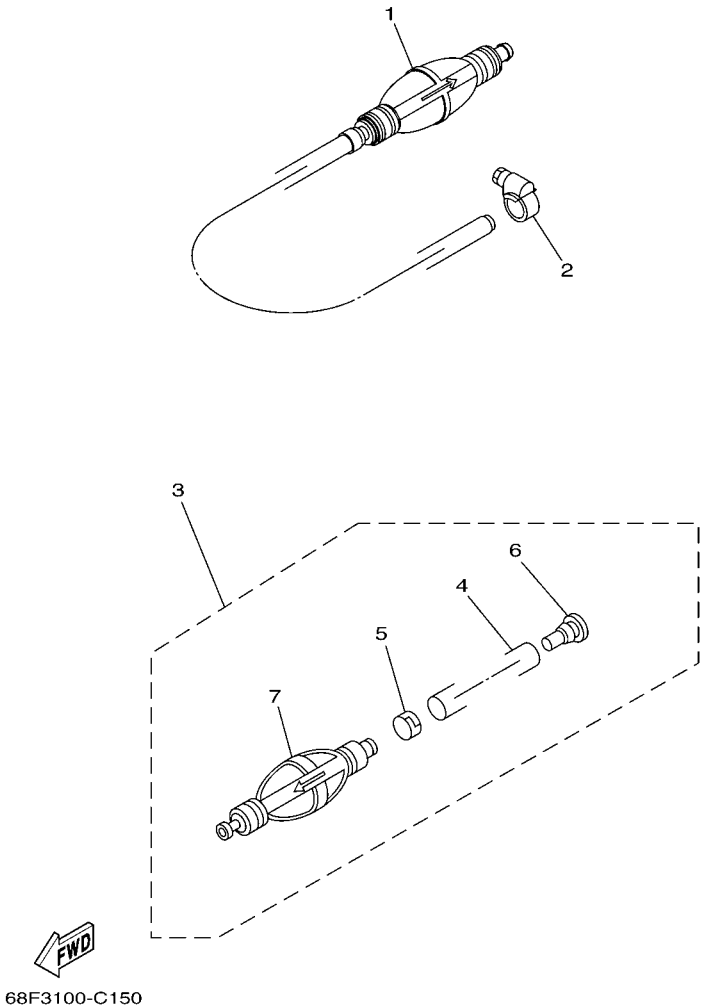

REF. NO.	PART NO.	DESCRIPTION	68H3	68L3	68F3	68K3	68G3	REMARKS
1	6YK–24307–42	FUEL PIPE COMP. 2	1		1			AP FOR CAN
2	90450–10M07	HOSE CLAMP ASSY	1		1			AP FOR CAN
3	6Y2–24307–50	FUEL PIPE COMP. 2	1	1	1	1	1	AP FOR OCE
4	90445–13M01	.HOSE (L2050)	1	1	1	1	1	
5	6E5–24351–51	.BAND 1	1	1	1	1	1	
6	90480–06M19	.GROMMET	1	1	1	1	1	
7	6Y2–24360–60	.PRIMER PUMP ASSY	1	1	1	1	1	

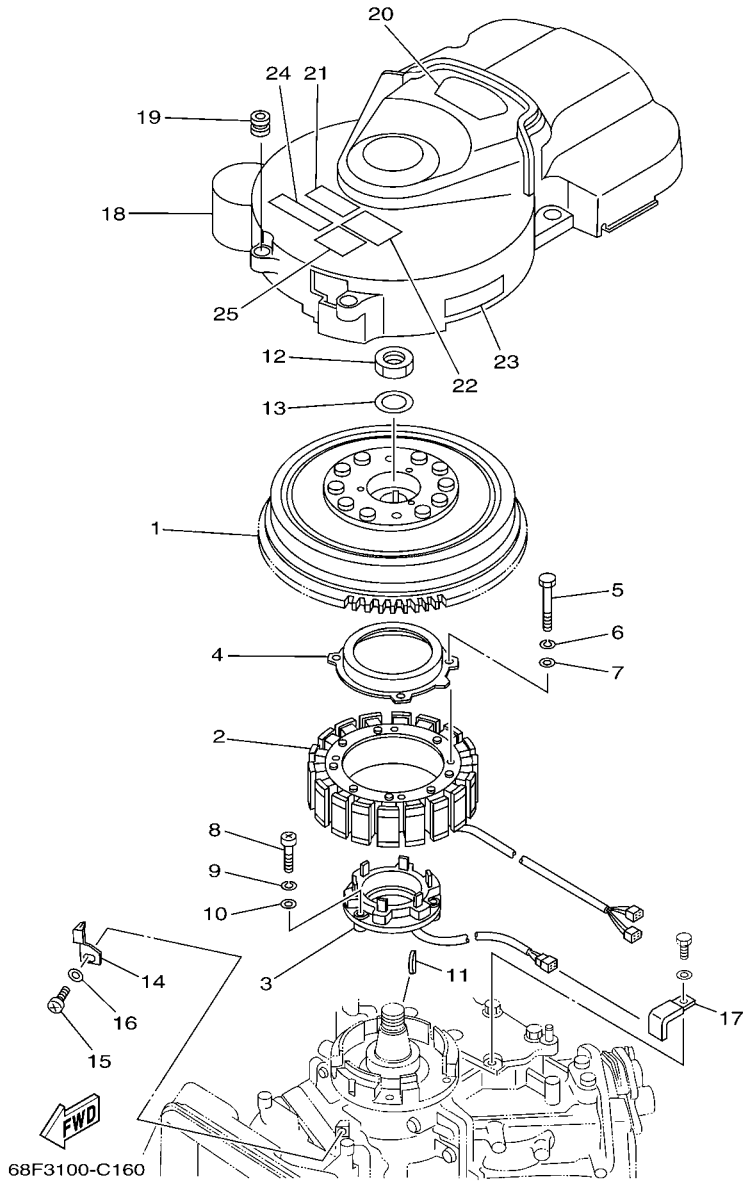

FIG. 16 GENERATOR

REF. NO.	PART NO.	DESCRIPTION	68H3	68L3	68F3	68K3	68G3	REMARKS
1	68F–81450–00	ROTOR ASSY	1	1	1	1	1	
2	68F–81410–00	STATOR ASSY	1	1	1	1	1	
3	60V–85580–00	COIL, PULSER	1	1	1	1	1	
4	61A–83721–00	COVER	1	1	1	1	1	
5	97013–06035	BOLT	4	4	4	4	4	
6	92903–06100	WASHER, SPRING	4	4	4	4	4	
7	92903–06600	WASHER, PLATE	4	4	4	4	4	
8	97885–05030	SCREW, PAN HEAD	3	3	3	3	3	
9	92995–05100	WASHER	3	3	3	3	3	
10	92995–05600	WASHER	3	3	3	3	3	
11	90280–05015	KEY, WOODRUFF	1	1	1	1	1	
12	90170–24M22	NUT	1	1	1	1	1	
13	90201–25M02	WASHER, PLATE	1	1	1	1	1	
14	6E5–81332–00	PLATE, TIMING	1	1	1	1	1	
15	97885–06010	SCREW, PAN HEAD	1	1	1	1	1	
16	92995–06600	WASHER	1	1	1	1	1	
17	90465–08M23	CLAMP	2	2	2	2	2	
18	68F–81337–10	COVER, FLYWHEEL	1	1	1	1	1	
19	663–82317–01	DAMPER, IGNITION COIL	4	4	4	4	4	
20	68F–14488–00	LABEL, CAUTION	1	1	1	1	1	
21	6A1–83625–41	MARK 5	1	1	1	1	1	
22	6A1–83625–51	MARK 5	1		1		1	FOR CAN,CAR
23	6E5–85711–40	MARK, CAUTION	1	1	1	1	1	FOR USA,OCE
	6E5–85711–50	MARK, CAUTION	1		1			FOR CAN
	6E5–85711–60	MARK, CAUTION			1		1	FOR CAR
24	6K1–83623–41	MARK 3				1	1	
25	6K1–83623–50	MARK 3					1	FOR CAR

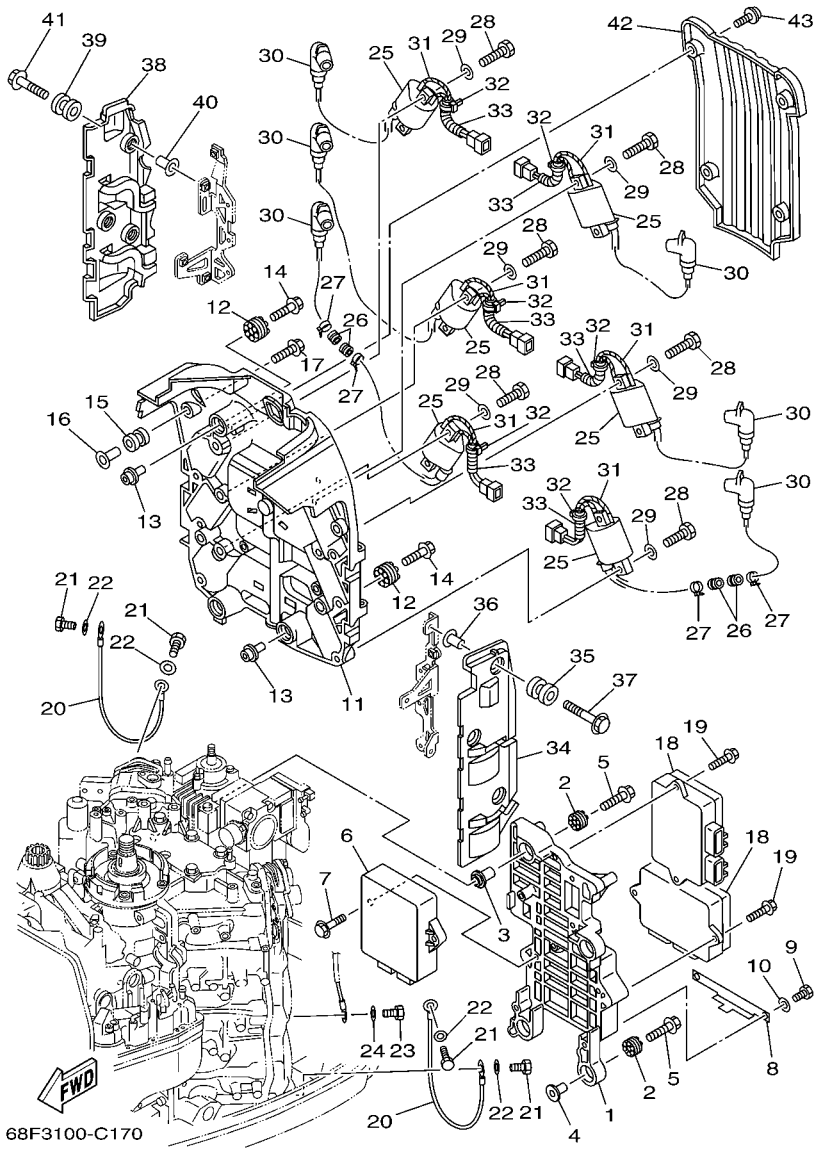

FIG. 17 ELECTRICAL 1

REF. NO.	PART NO.	DESCRIPTION	68H3	68L3	68F3	68K3	68G3	REMARKS
1	60V–85542–01–94	BRACKET	1	1	1	1	1	
2	68F–85564–00	GROMMET	4	4	4	4	4	
3	68F–86129–00	COLLAR	2	2	2	2	2	
4	68F–86129–10	COLLAR	2	2	2	2	2	
5	68F–85119–00	BOLT	4	4	4	4	4	
6	68F–8591A–B0	ENGINE CONTROL UNIT ASSY			1			L
	68F–8591A–A0	ENGINE CONTROL UNIT ASSY			1		1	X
	68L–8591A–20	ENGINE CONTROL UNIT ASSY		1				X
	68J–8591A–20	ENGINE CONTROL UNIT ASSY	1					L
	68H–8591A–20	ENGINE CONTROL UNIT ASSY	1			1		X
7	90119–06MA3	BOLT, WITH WASHER	2	2	2	2	2	
8	60V–85548–00	HOLDER	1	1	1	1	1	
9	97013–06014	BOLT	2	2	2	2	2	
10	92903–06600	WASHER, PLATE	2	2	2	2	2	
11	68F–82316–00	BRACKET, IGNITION COIL	1	1	1	1	1	
12	68F–85516–01	SPACER	4	4	4	4	4	
13	68F–86129–10	COLLAR	4	4	4	4	4	
14	68F–85119–00	BOLT	4	4	4	4	4	
15	6A0–82317–00	DAMPER, IGNITION COIL	4	4	4	4	4	
16	624–42542–00	PIPE	4	4	4	4	4	
17	90119–06M88	BOLT, WITH WASHER	4	4	4	4	4	
18	60V–8591B–00	DRIVER, INJECTOR ASSY	2	2	2	2	2	
19	90119–06MA2	BOLT, WITH WASHER	4	4	4	4	4	
20	6G0–82519–00	WIRE, EARTH LEAD	2	2	2	2	2	
21	97095–06012	BOLT	4	4	4	4	4	
22	92995–06600	WASHER	4	4	4	4	4	
23	97095–06012	BOLT	1	1	1	1	1	

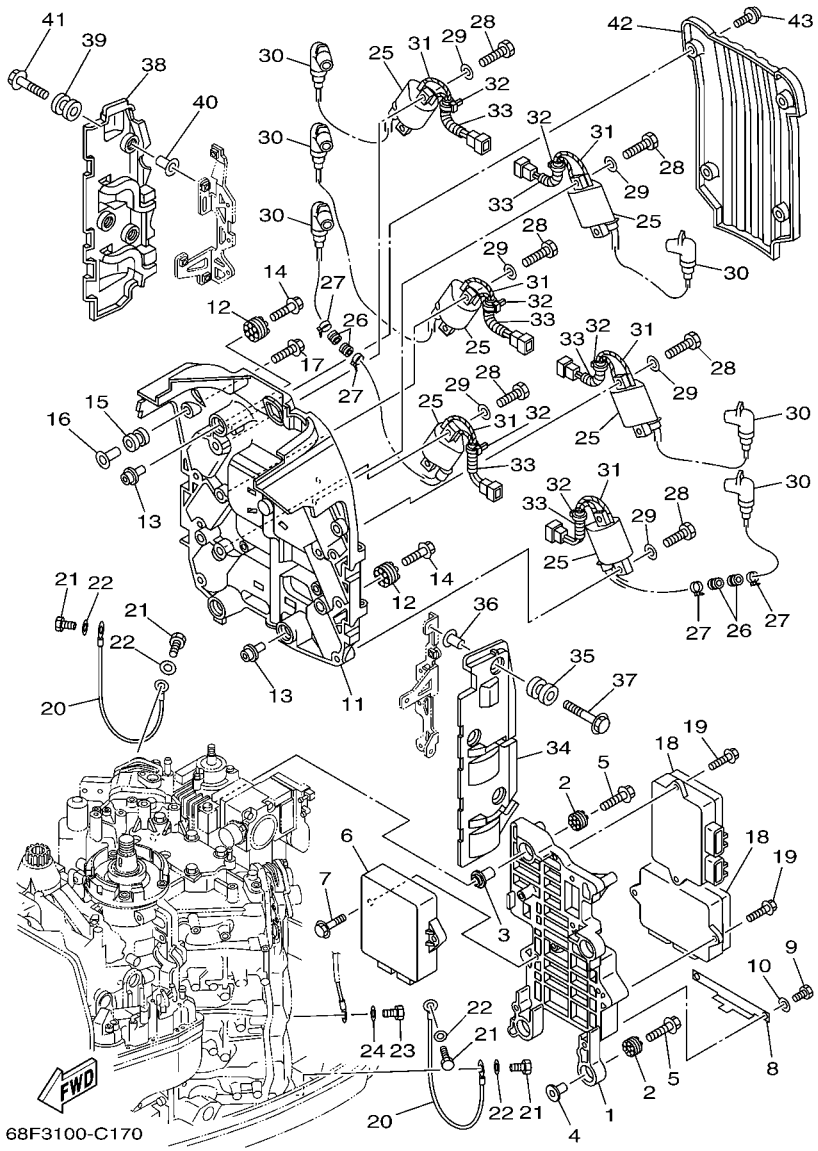

FIG. 17 ELECTRICAL 1

REF. NO.	PART NO.	DESCRIPTION	68H3	68L3	68F3	68K3	68G3	REMARKS
24	92995–06600	WASHER	1	1	1	1	1	
25	68F–82310–01	IGNITION COIL ASSY	6	6	6	6	6	
26	90480–22M15	GROMMET	4	4	4	4	4	
27	90465–11M10	CLAMP	4	4	4	4	4	
28	97013–05020	BOLT	12	12	12	12	12	
29	92903–05600	WASHER, PLATE	12	12	12	12	12	
30	68F–82370–01	PLUG CAP ASSY	6	6	6	6	6	
31	90448–03001	HOSE, WITH UNION	12	12	12	12	12	
32	90465–11M10	CLAMP	6	6	6	6	6	
33	90447–07007	HOSE, WITH SPRING	6	6	6	6	6	
34	68F–8252U–20	COVER	1	1	1	1	1	
35	6A0–82317–00	DAMPER, IGNITION COIL	3	3	3	3	3	
36	624–42542–00	PIPE	3	3	3	3	3	
37	90119–06M88	BOLT, WITH WASHER	3	3	3	3	3	
38	68F–8252U–30	COVER	1	1	1	1	1	
39	6A0–82317–00	DAMPER, IGNITION COIL	3	3	3	3	3	
40	624–42542–00	PIPE	3	3	3	3	3	
41	90119–06M88	BOLT, WITH WASHER	3	3	3	3	3	
42	68F–83579–00	COVER, METER 2	1	1	1	1	1	
43	90111–06034	BOLT	4	4	4	4	4	

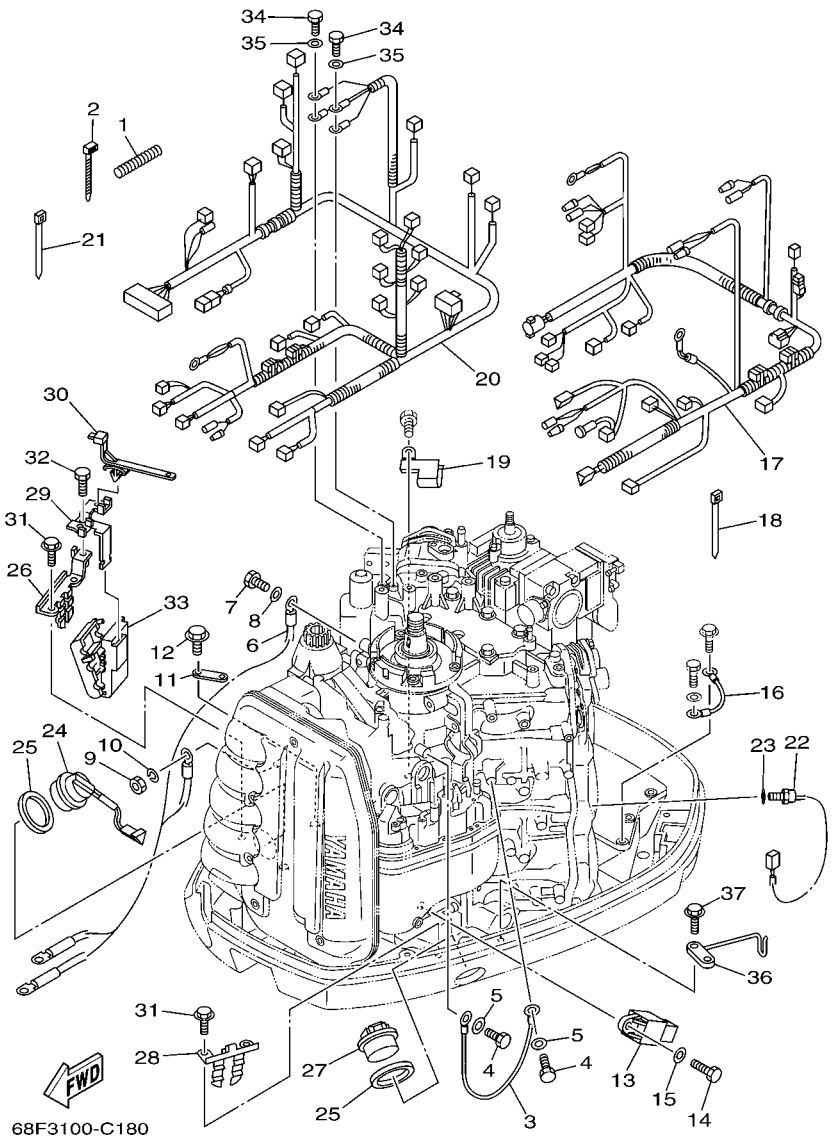

FIG. 18 ELECTRICAL 2

REF. NO.	PART NO.	DESCRIPTION	68H3	68L3	68F3	68K3	68G3	REMARKS
1	90447–07011	HOSE, WITH SPRING	1	1	1	1	1	
2	90465–11M10	CLAMP	1	1	1	1	1	
3	6H2–81949–11	WIRE, LEAD	1	1	1	1	1	
4	97095–06012	BOLT	2	2	2	2	2	
5	92995–06600	WASHER	2	2	2	2	2	
6	68F–82105–00	WIRE HARNESS	1	1	1	1	1	
7	97095–08016	BOLT	1	1	1	1	1	
8	92995–08600	WASHER	1	1	1	1	1	
9	95333–08600	NUT	1	1	1	1	1	
10	92903–08100	WASHER, SPRING	1	1	1	1	1	
11	6E5–82588–00	PLATE	1	1	1	1	1	
12	95895–06020	BOLT, FLANGE	1	1	1	1	1	
13	68V–81950–00	RELAY ASSY	1	1	1	1	1	
14	97095–06016	BOLT	1	1	1	1	1	
15	92995–06600	WASHER	1	1	1	1	1	
16	6E5–82531–10	WIRE, LEAD	1	1	1	1	1	
17	68F–82590–40	WIRE HARNESS ASSY	1	1	1	1	1	FOR USA,CAN
	68F–82590–30	WIRE HARNESS ASSY	1	1	1	1	1	FOR OCE,CAR
18	90465–11M52	CLAMP	1	1	1	1	1	
19	68F–83919–00	CLAMP, HARNESS	1	1	1	1	1	
20	68F–8259M–20	WIRE HARNESS ASSY 2	1	1	1	1	1	
21	90465–11M52	CLAMP	1	1	1	1	1	
22	61A–85790–00	THERMOSENSOR ASSY	1	1	1	1	1	
23	92990–10600	WASHER, PLATE	1	1	1	1	1	
24	6R3–82563–00	TRIM & TILT SWITCH ASSY	1	1	1	1	1	
25	6E5–82587–00	GASKET	2	2	2	2	2	
26	68F–83614–00	BRACKET	1	1	1	1	1	

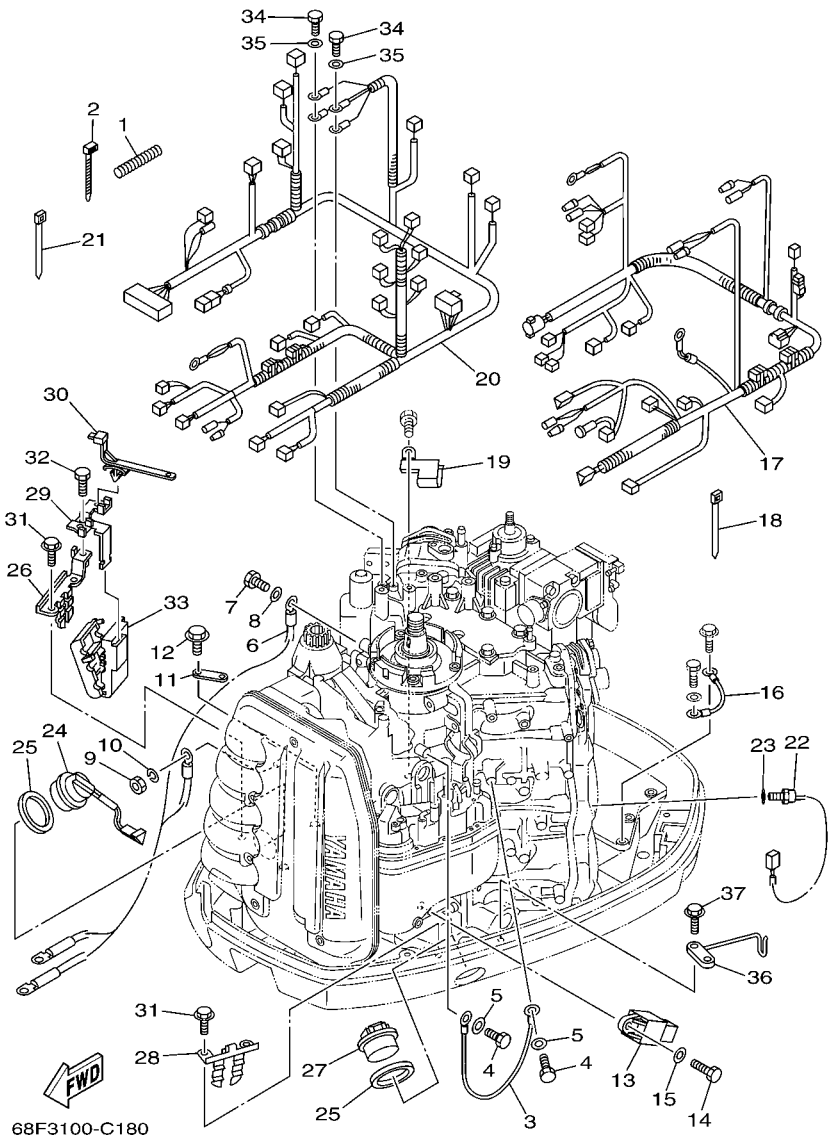

FIG. 18 ELECTRICAL 2

REF. NO.	PART NO.	DESCRIPTION	68H3	68L3	68F3	68K3	68G3	REMARKS
27	68F–42723–10–8D	COVER, BOTTOM	1	1	1	1	1	
28	6R3–83614–00	BRACKET	1	1	1	1	1	
29	68F–83635–00	BRACKET	1	1	1	1	1	
30	90464–20213	CLAMP	2	2	2	2	2	
31	90109–06M80	BOLT	4	4	4	4	4	
32	97095–06014	BOLT	1	1	1	1	1	
33	68F–83634–00	GROMMET	1	1	1	1	1	
34	97095–06014	BOLT	2	2	2	2	2	
35	92995–06600	WASHER	2	2	2	2	2	
36	6K7–82588–00	PLATE	1	1	1	1	1	
37	95895–06020	BOLT, FLANGE	1	1	1	1	1	

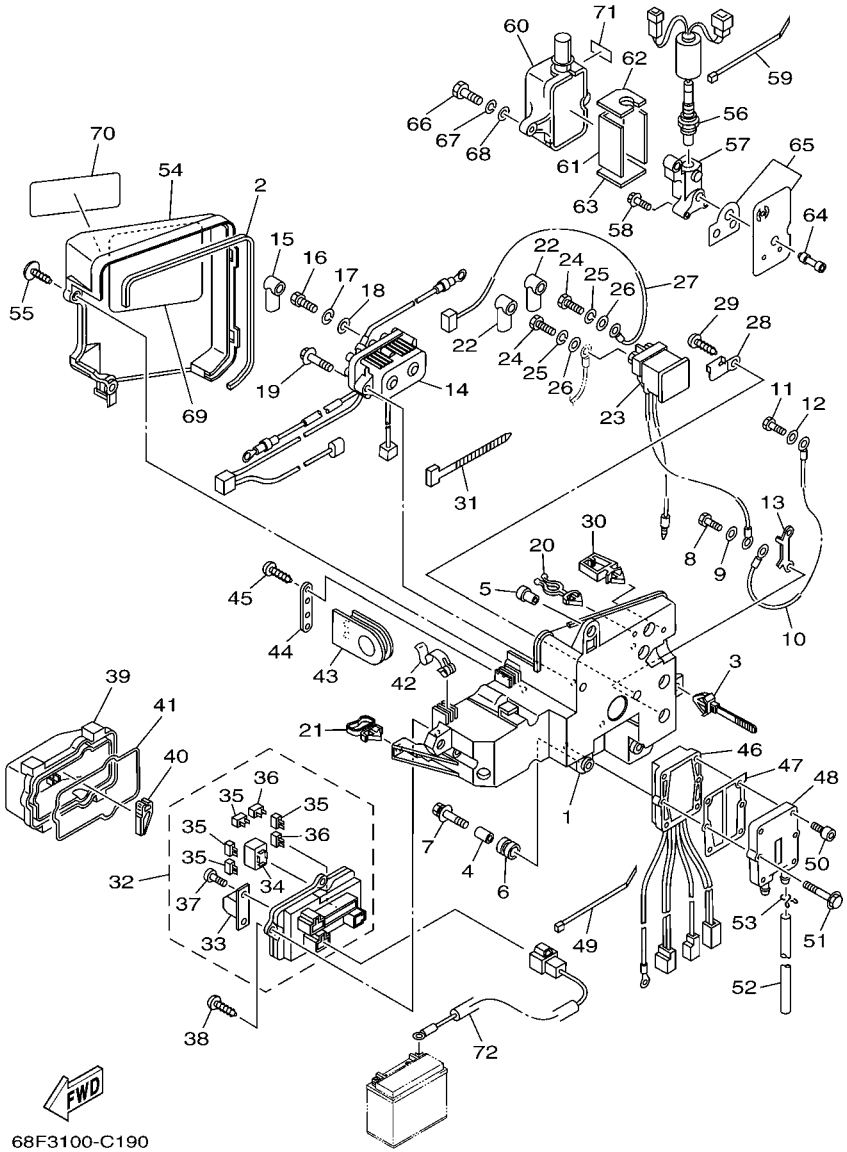

FIG. 19 ELECTRICAL 3

REF. NO.	PART NO.	DESCRIPTION	68H3	68L3	68F3	68K3	68G3	REMARKS
1	68F–81948–01	BRACKET	1	1	1	1	1	
2	68F–82535–00	GROMMET	1	1	1	1	1	
3	90465–12M56	CLAMP	1	1	1	1	1	
4	624–42542–00	PIPE	4	4	4	4	4	
5	90387–06M91	COLLAR	1	1	1	1	1	
6	6A0–82317–00	DAMPER, IGNITION COIL	5	5	5	5	5	
7	90119–06M65	BOLT, WITH WASHER	5	5	5	5	5	
8	97095–06012	BOLT	2	2	2	2	2	
9	92995–06600	WASHER	2	2	2	2	2	
10	68F–81949–20	WIRE, LEAD	1	1	1	1	1	
11	97095–06012	BOLT	1	1	1	1	1	
12	92995–06600	WASHER	1	1	1	1	1	
13	61A–87149–00	CONNECTOR	1	1	1	1	1	
14	68F–81950–01	RELAY ASSY	1	1	1	1	1	
15	682–82119–01	COVER, LEAD WIRE	1	1	1	1	1	
16	97095–06010	BOLT	2	2	2	2	2	
17	92995–06100	WASHER, SPRING	2	2	2	2	2	
18	92995–06600	WASHER	2	2	2	2	2	
19	90119–06MA4	BOLT, WITH WASHER	2	2	2	2	2	
20	90464–18M46	CLAMP	1	1	1	1	1	
21	90464–23199	CLAMP	1	1	1	1	1	
22	682–82119–01	COVER, LEAD WIRE	2	2	2	2	2	
23	68V–8194A–00	RELAY	1	1	1	1	1	
24	97095–06010	BOLT	2	2	2	2	2	
25	92995–06100	WASHER, SPRING	2	2	2	2	2	
26	92995–06600	WASHER	2	2	2	2	2	
27	68F–82117–00	WIRE, LEAD	1	1	1	1	1	

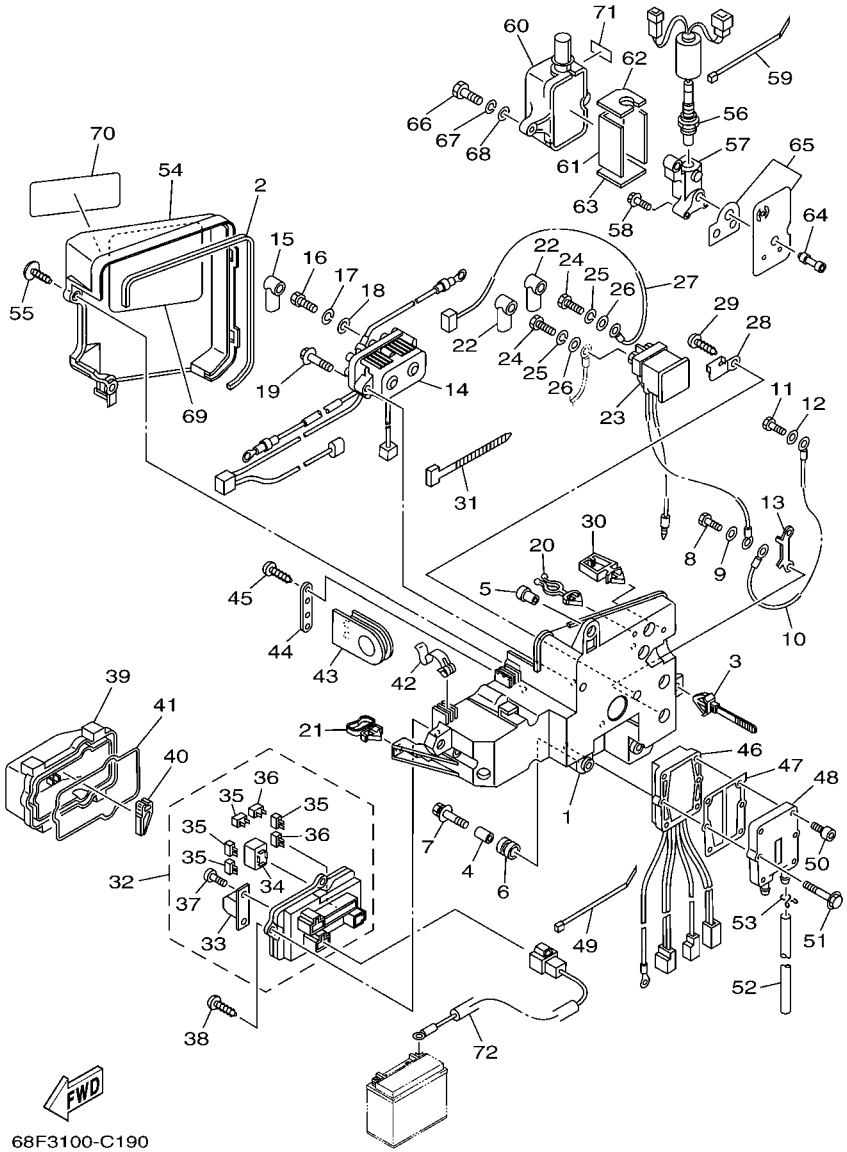

FIG. 19 ELECTRICAL 3

REF. NO.	PART NO.	DESCRIPTION	68H3	68L3	68F3	68K3	68G3	REMARKS
28	68V–81953–00	STAY, RELAY	1	1	1	1	1	
29	97780–60620	SCREW, TAPPING	1	1	1	1	1	
30	90464–05141	CLAMP	1	1	1	1	1	
31	90465–11M52	CLAMP	1	1	1	1	1	
32	68F–82170–00	FUSE BOX ASSY	1	1	1	1	1	
33	68F–82151–00	.FUSE (80A)	2	2	2	2	2	
34	68F–8195A–00	.RELAY ASSY	2	2	2	2	2	
35	67F–82151–00	.FUSE (20A)	4	4	4	4	4	
36	67F–82151–10	.FUSE (30A)	2	2	2	2	2	
37	68F–82846–00	.SCREW, PAN HEAD (M5)	4	4	4	4	4	
38	97780–50620	SCREW, TAPPING	3	3	3	3	3	
39	68F–85544–00	CASE	1	1	1	1	1	
40	67F–2812A–00	PULLER, FUSE	1	1	1	1	1	
41	68F–82176–00	DAMPER	1	1	1	1	1	
42	68F–8572S–00	SPRING	2	2	2	2	2	
43	68F–81336–00	GROMMET	1	1	1	1	1	
44	68F–81128–00	CLAMP	1	1	1	1	1	
45	97780–50616	SCREW, TAPPING	2	2	2	2	2	
46	68F–81960–01	RECTIFIER & REGULATOR ASSY	1	1	1	1	1	
47	69J–81975–A0	PLATE, RECTIFIER FITTING	1	1	1	1	1	
48	69J–81972–01–1S	COVER, RECTIFIER	1	1	1	1	1	
49	90465–13M18	CLAMP	1	1	1	1	1	
50	90110–06M07	BOLT, HEXAGON SOCKET HEAD	4	4	4	4	4	
51	90119–06MA4	BOLT, WITH WASHER	2	2	2	2	2	
52	90445–09097	HOSE (L250)	1	1	1	1	1	
53	90467–08M18	CLIP	1	1	1	1	1	
54	68F–81942–00	COVER	1	1	1	1	1	

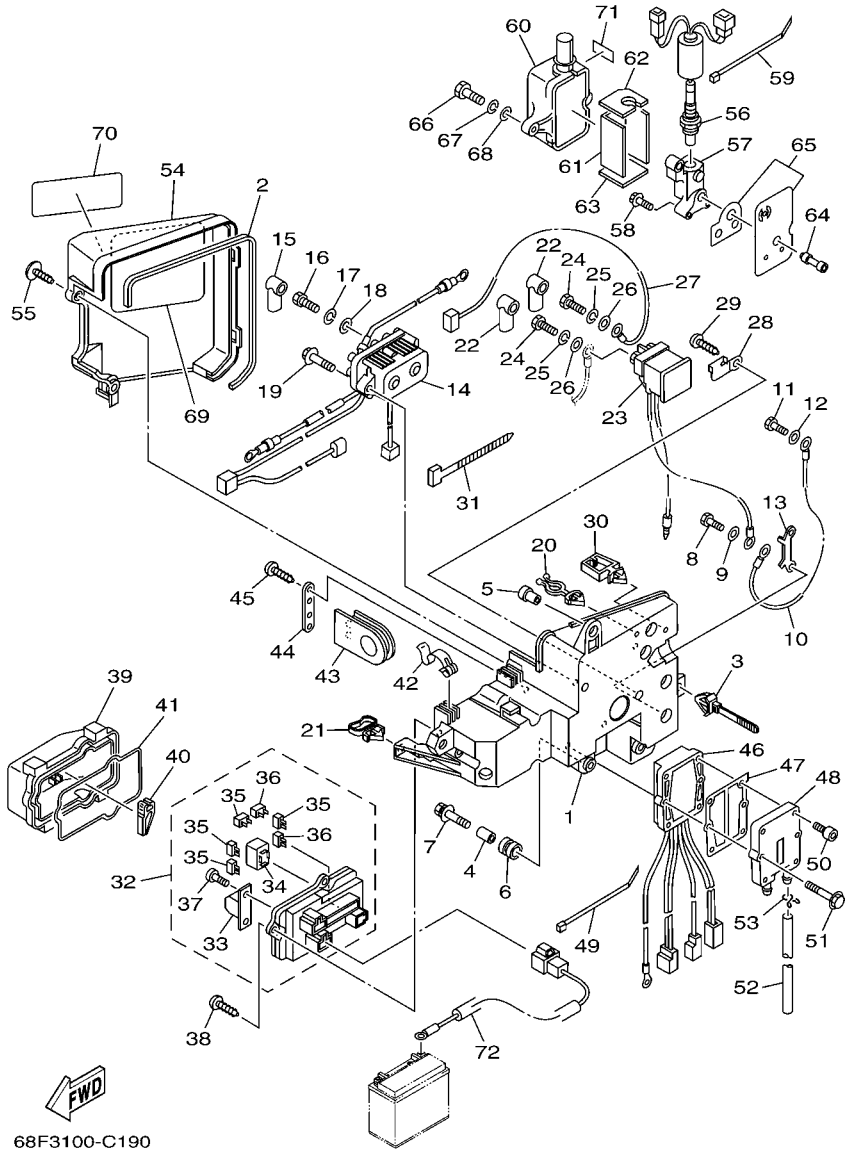

FIG. 19 ELECTRICAL 3

REF. NO.	PART NO.	DESCRIPTION	68H3	68L3	68F3	68K3	68G3	REMARKS
55	90169–05M00	SCREW, TRUSS HEAD TAPPING	2	2	2	2	2	
56	68F–8592A–00	SENSOR	1	1	1	1	1	
57	65L–11395–00	HOLDER	1	1	1	1	1	
58	90119–06M74	BOLT, WITH WASHER	3	3	3	3	3	
59	90465–13M18	CLAMP	1	1	1	1	1	
60	65L–85832–00	CASE, UNDER	1	1	1	1	1	
61	65L–11354–00	GASKET	1	1	1	1	1	
62	65L–1131N–00	GASKET, HOLDER	1	1	1	1	1	
63	65L–11396–00	GASKET, HOLDER	1	1	1	1	1	
64	68F–11353–00	JOINT	1	1	1	1	1	
65	68F–W1135–00	SEAL, CYLINDER	1	1	1	1	1	
66	97095–06030	BOLT	2	2	2	2	2	
67	92995–06100	WASHER, SPRING	2	2	2	2	2	
68	92995–06600	WASHER	2	2	2	2	2	
69	68F–81919–20	GRAPHIC, REGULATOR	1	1	1	1	1	
70	68F–81919–00	GRAPHIC, REGULATOR	1	1	1	1	1	
71	65L–83625–40	MARK 5	1	1	1	1	1	FOR USA,OCE
	65L–83625–50	MARK 5	1		1		1	FOR CAN,CAR
72	68F–81949–00	WIRE, LEAD (ISOLATOR CABLE)	1	1	1	1	1	AP

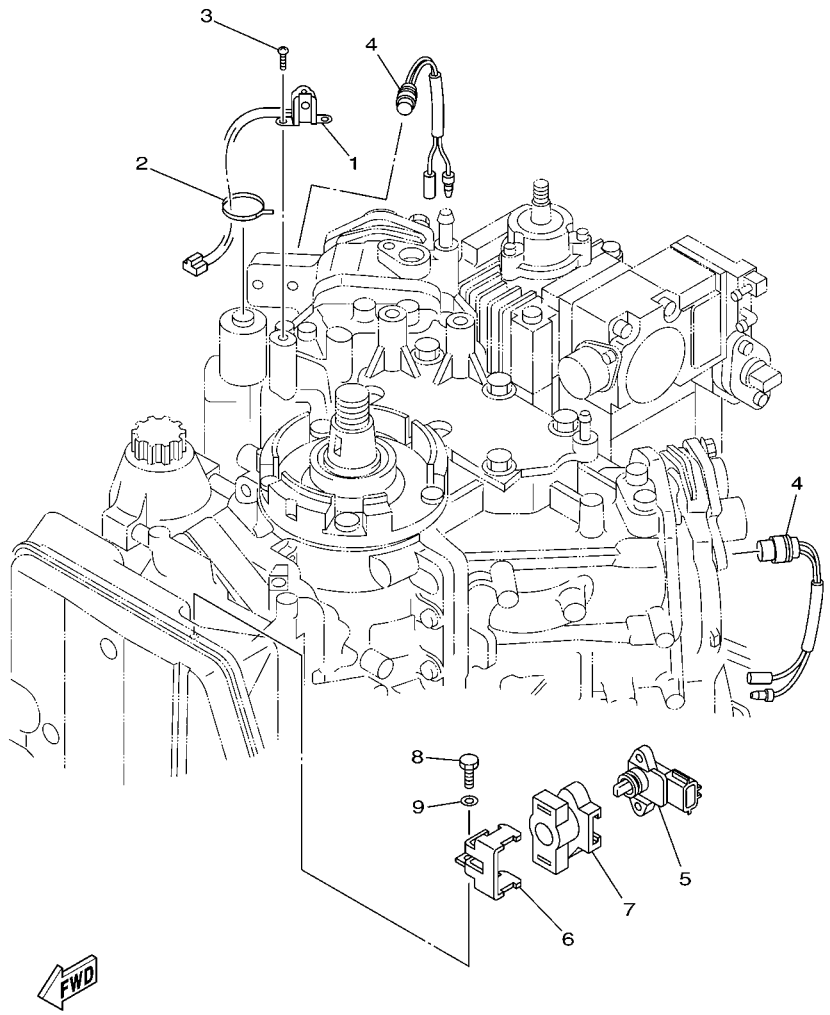

68F3100-C200

FIG. 20 ELECTRICAL 4

REF. NO.	PART NO.	DESCRIPTION	68H3	68L3	68F3	68K3	68G3	REMARKS
1	61A–85895–00	CRANK POSITION SENDER	1	1	1	1	1	
2	90465–13M18	CLAMP	1	1	1	1	1	
3	97885–05012	SCREW, PAN HEAD	2	2	2	2	2	
4	688–82560–10	THERMO SWITCH ASSY	2	2	2	2	2	
5	68F–83688–00	SENSOR ASSY	1	1	1	1	1	
6	68F–8431R–10	STAY, SETTING	1	1	1	1	1	
7	68F–84352–00	GROMMET	1	1	1	1	1	
8	97095–06016	BOLT	1	1	1	1	1	
9	92995–06600	WASHER	1	1	1	1	1	

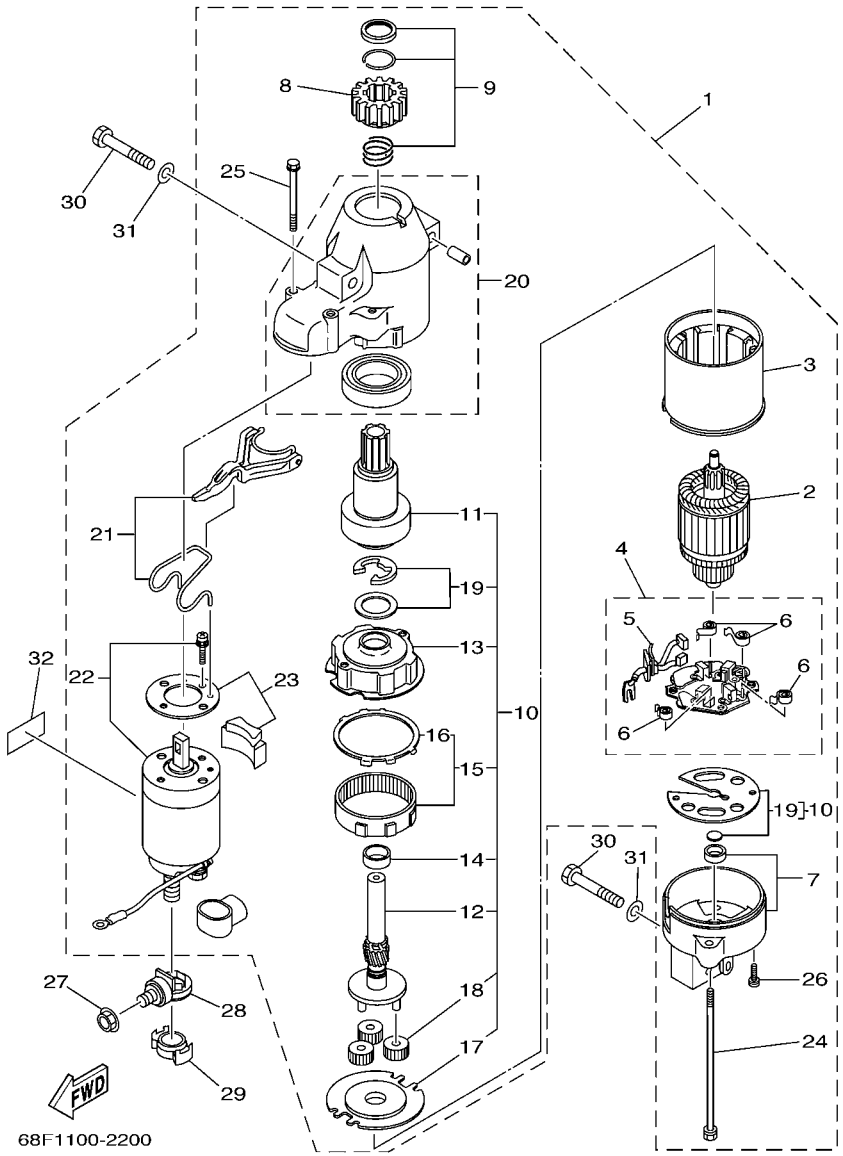

FIG. 21 STARTING MOTOR

REF. NO.	PART NO.	DESCRIPTION	68H3	68L3	68F3	68K3	68G3	REMARKS
1	68F–81800–01	STARTING MOTOR ASSY	1	1	1	1	1	
2	67F–81850–00	.ARMATURE ASSY	1	1	1	1	1	
3	67F–81810–00	.STATOR ASSY	1	1	1	1	1	
4	68F–81840–00	.BRUSH HOLDER ASSY	1	1	1	1	1	
5	67F–81801–00	..BRUSH SET	1	1	1	1	1	
6	67F–81813–00	..SPRING, BRUSH	4	4	4	4	4	
7	68F–81820–00	.REAR BRACKET ASSY	1	1	1	1	1	
8	67F–81808–00	.PINION ASSY	1	1	1	1	1	
9	67F–81857–00	.PINION STOPPER SET	1	1	1	1	1	
10	67F–81807–00	.GEAR ASSY, STARTING MOTOR	1	1	1	1	1	
11	67F–81832–00	..CLUTCH, OVER RUN	1	1	1	1	1	
12	67F–81836–00	..SHAFT, PINION	1	1	1	1	1	
13	67F–81821–00	..BRACKET, CENTER 1	1	1	1	1	1	
14	67F–81841–00	..BEARING	1	1	1	1	1	
15	67F–81891–00	..GEAR, RING	1	1	1	1	1	
16	67F–8183R–00	...GASKET	1	1	1	1	1	
17	67F–81830–00	..BRACKET, CENTER 2	1	1	1	1	1	
18	67F–8183T–00	..GEAR, IDLER	3	3	3	3	3	
19	67F–81809–00	..WASHER KIT	1	1	1	1	1	
20	67F–81842–00	.COVER	1	1	1	1	1	
21	67F–81839–00	.LEVER ASSY	1	1	1	1	1	
22	68F–81941–01	.STARTER RELAY ASSY	1	1	1	1	1	
23	67F–81869–00	.COVER, DUST	1	1	1	1	1	
24	6K7–81826–10	.BOLT	2	2	2	2	2	
25	67F–81828–00	.BOLT 2	2	2	2	2	2	
26	67F–81846–00	.SCREW	2	2	2	2	2	
27	90179–08003	NUT	1	1	1	1	1	

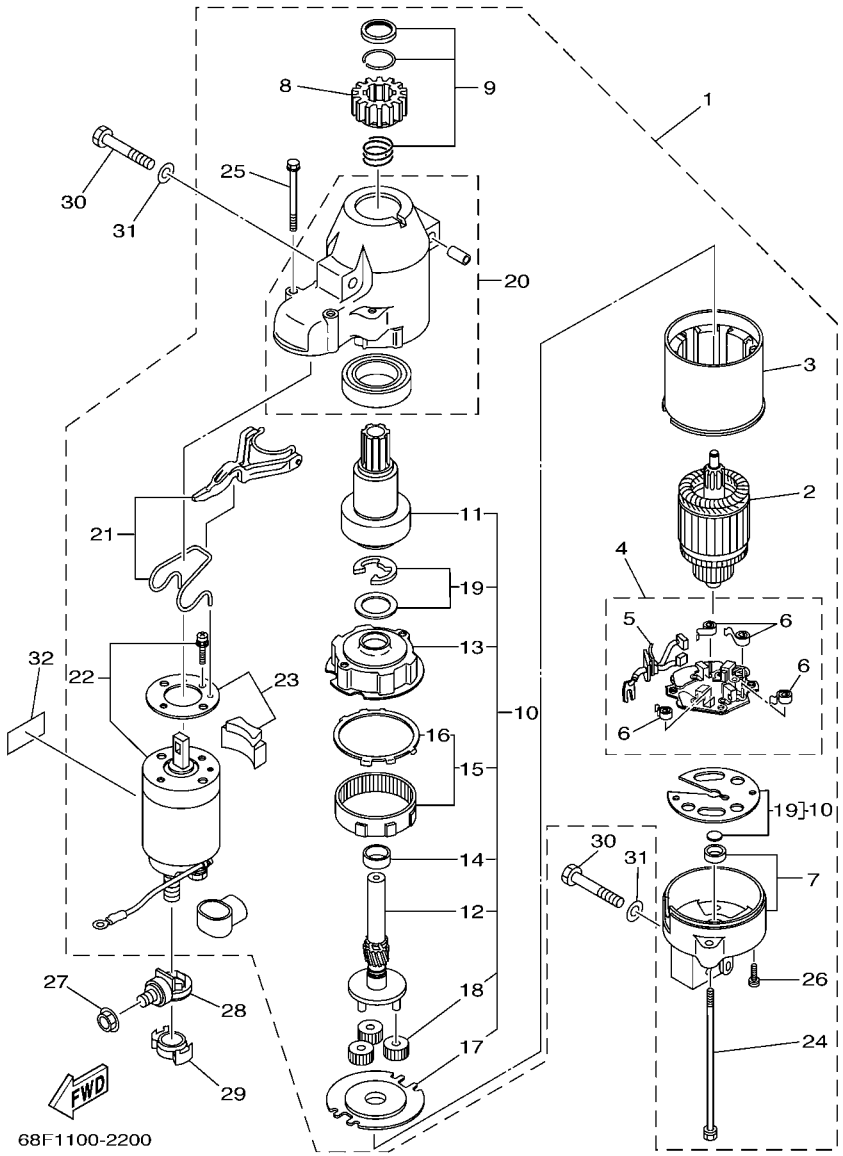

FIG. 21 STARTING MOTOR

REF. NO.	PART NO.	DESCRIPTION	68H3	68L3	68F3	68K3	68G3	REMARKS
28	60V–81925–00	TERMINAL	1	1	1	1	1	
29	68F–82582–00	COVER, WIRE HARNESS	1	1	1	1	1	
30	97013–08045	BOLT	3	3	3	3	3	
31	92903–08600	WASHER, PLATE	3	3	3	3	3	
32	67F–83627–01	LABEL, CAUTION 7	1	1	1	1	1	FOR USA

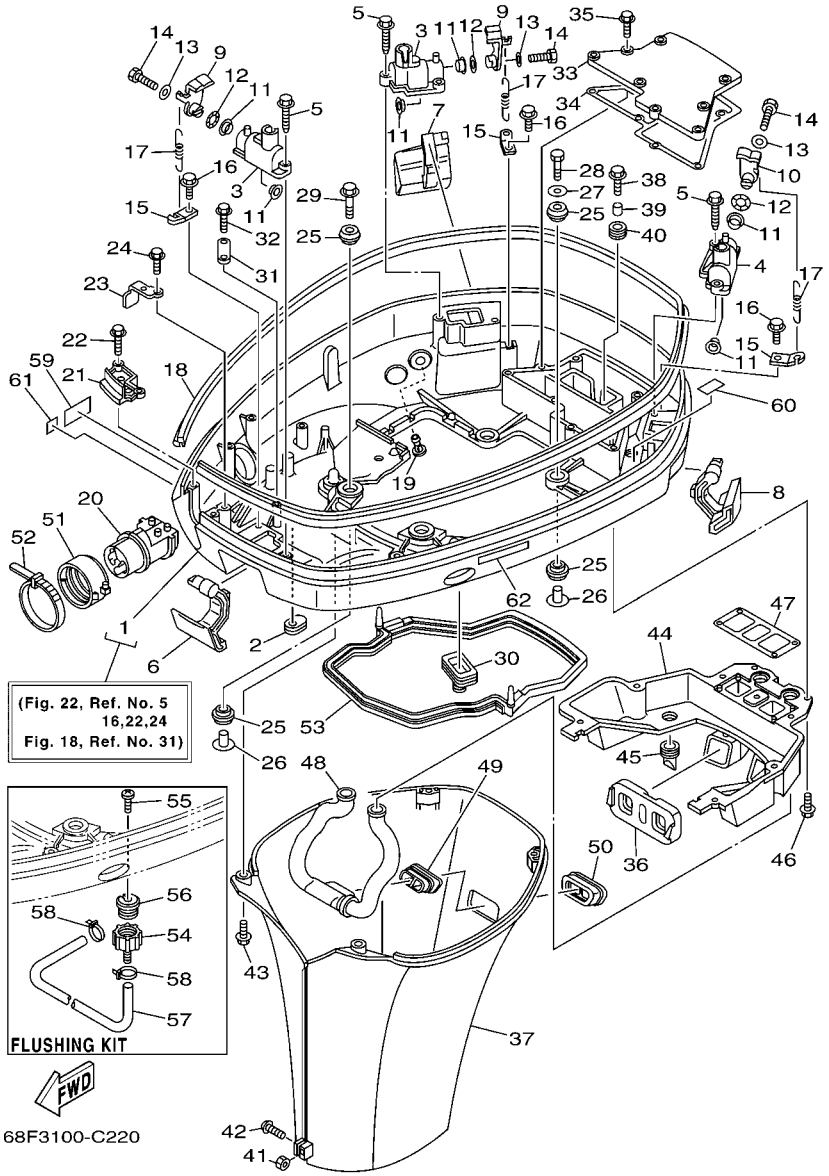

FIG. 22 BOTTOM COWLING

REF. NO.	PART NO.	DESCRIPTION	68H3	68L3	68F3	68K3	68G3	REMARKS
1	68F–42710–10–8D	BOTTOM COWLING ASSY	1	1	1	1	1	
2	61A–42727–00	GROMMET	1	1	1			
	64G–42727–00	GROMMET				1	1	
3	68F–42828–00–94	PLATE, CLAMP	2	2	2	2	2	
4	68F–42828–10–94	PLATE, CLAMP	1	1	1	1	1	
5	90109–06M82	BOLT	6	6	6	6	6	
6	68F–42815–00–8D	LEVER, CLAMP	1	1	1	1	1	
7	68F–42816–00–8D	LEVER, CLAMP	1	1	1	1	1	
8	68F–42817–00–8D	LEVER, CLAMP	1	1	1	1	1	
9	68F–42818–00	LEVER, CLAMP	2	2	2	2	2	
10	67F–42818–00	LEVER, CLAMP	1	1	1	1	1	
11	90386–15M73	BUSH	6	6	6	6	6	
12	90206–15M18	WASHER, WAVE	3	3	3	3	3	
13	90201–06068	WASHER, PLATE	3	3	3	3	3	
14	97095–06016	BOLT	3	3	3	3	3	
15	64D–43144–00	HOOK, SPRING	3	3	3	3	3	
16	90109–06M80	BOLT	3	3	3	3	3	
17	90506–16M34	SPRING, TENSION	3	3	3	3	3	
18	68F–42615–00	SEAL	1	1	1	1	1	
19	6E5–44391–00	NIPPLE, HOSE	1	1	1	1	1	
20	68F–42725–01	GROMMET	1	1	1	1	1	
21	68F–42738–00–5B	PLATE, FITTING	1	1	1	1	1	
22	90109–06M86	BOLT	2	2	2	2	2	
23	64D–42738–10–5B	PLATE, FITTING	1	1	1	1	1	
24	90109–06M80	BOLT	1	1	1	1	1	
25	90480–22M81	GROMMET	8	8	8	8	8	
26	90387–08M37	COLLAR	4	4	4	4	4	

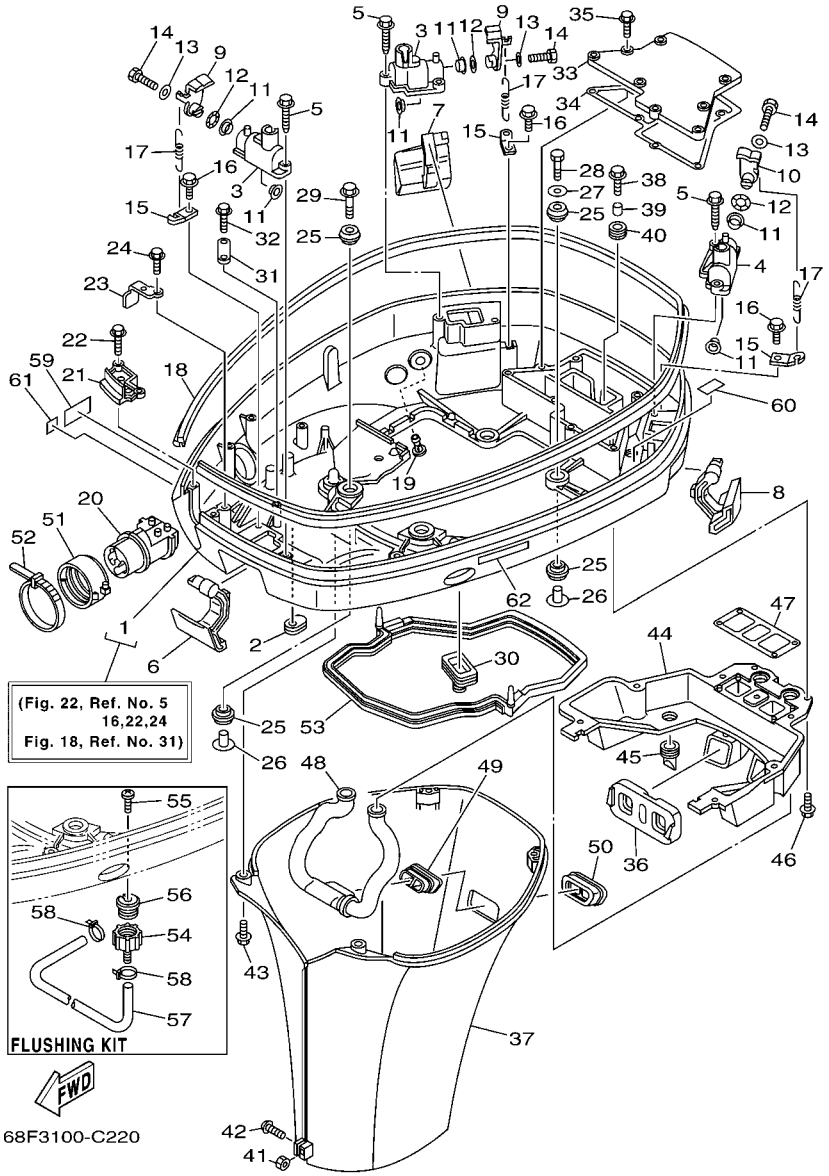

FIG. 22 BOTTOM COWLING

REF. NO.	PART NO.	DESCRIPTION	68H3	68L3	68F3	68K3	68G3	REMARKS
27	90201–08M54	WASHER, PLATE	1	1	1	1	1	
28	97075–08035	BOLT	1	1	1	1	1	
29	90119–08M22	BOLT, WITH WASHER	3	3	3	3	3	
30	688–42726–10	GROMMET	1	1	1	1	1	
31	6E5–82588–00	PLATE	1	1	1	1	1	
32	95895–06020	BOLT, FLANGE	1	1	1	1	1	
33	68F–42723–00–94	COVER, BOTTOM	1	1	1	1	1	
34	68F–42721–00	GASKET 1	1	1	1	1	1	
35	95895–06020	BOLT, FLANGE	8	8	8	8	8	
36	68F–42769–00	SEAL, RUBBER	1	1	1	1	1	
37	68F–42741–00–4D	APRON	1		1			L
	68F–42741–10–4D	APRON	1	1	1	1	1	X
38	90119–06077	BOLT, WITH WASHER	2	2	2	2	2	
39	90387–06M43	COLLAR	2	2	2	2	2	
40	90480–13M24	GROMMET	2	2	2	2	2	
41	95380–06600	NUT, HEXAGON	1	1	1	1	1	
42	90159–06M03	SCREW, WITH WASHER	1	1	1	1	1	
43	95895–06016	BOLT, FLANGE	2	2	2	2	2	
44	68F–42771–00	APRON	1	1	1	1	1	
45	61A–42717–00	RUBBER, SEAL 2	4	4	4	4	4	
46	95895–06016	BOLT, FLANGE	9	9	9	9	9	
47	68F–42722–00	GASKET 2	1	1	1	1	1	
48	68F–12577–00	HOSE 2	1		1			L
	68F–12577–10	HOSE 2	1	1	1	1	1	X
49	68F–12582–01	JOINT, HOSE 2	1		1			L
	68F–12582–10	JOINT, HOSE 2	1	1	1	1	1	X
50	68F–42718–00	RUBBER, SEAL 3	1	1	1	1	1	

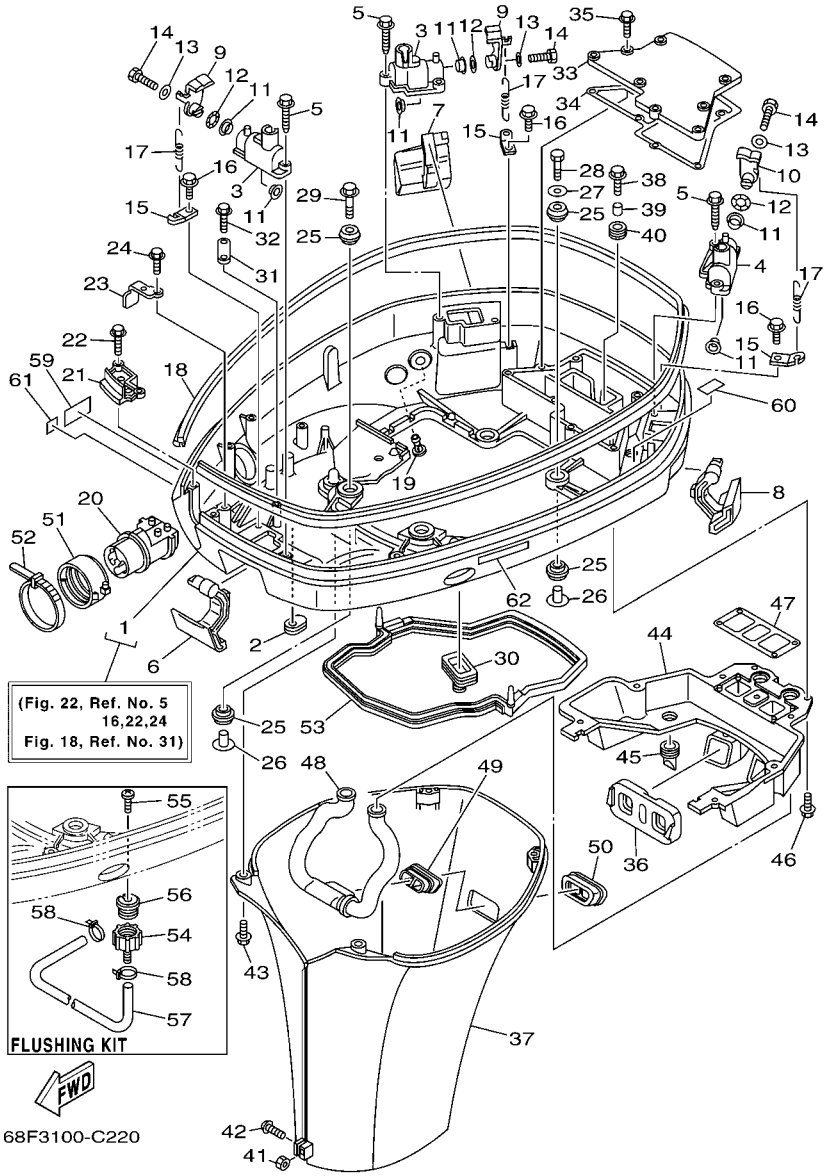

FIG. 22 BOTTOM COWLING

REF. NO.	PART NO.	DESCRIPTION	68H3	68L3	68F3	68K3	68G3	REMARKS
51	68F–42753–00	FASTNER	1	1	1	1	1	EXCEPT FOR CAR
52	90464–20258	CLAMP	1	1	1	1	1	EXCEPT FOR CAR
53	6E5–42716–10	RUBBER, SEAL 1	1	1	1	1	1	
54	6R3–12572–00	ADAPTER	1	1	1	1	1	FLUSHING KIT
55	90169–05M00	SCREW, TRUSS HEAD TAPPING	1	1	1	1	1	FLUSHING KIT
56	6R3–12580–00	JOINT ASSY	1	1	1	1	1	FLUSHING KIT
57	90445–11M35	HOSE (L540)	1	1	1	1	1	FLUSHING KIT
58	90465–11M10	CLAMP	2	2	2	2	2	FLUSHING KIT
59	68F–2415E–40	LABEL, CAUTION	1	1	1	1	1	FOR USA,OCE
	68F–2415E–60	LABEL, CAUTION	1		1		1	FOR CAN,CAR
60	68F–42791–01	MARK 1		1	1		1	
	68H–42791–01	MARK 1	1			1		
61	6A1–28176–00	LABEL, CAUTION			1		1	FOR CAR
62	6E3–8257H–00	PLATE, MARK			1		1	FOR CAR

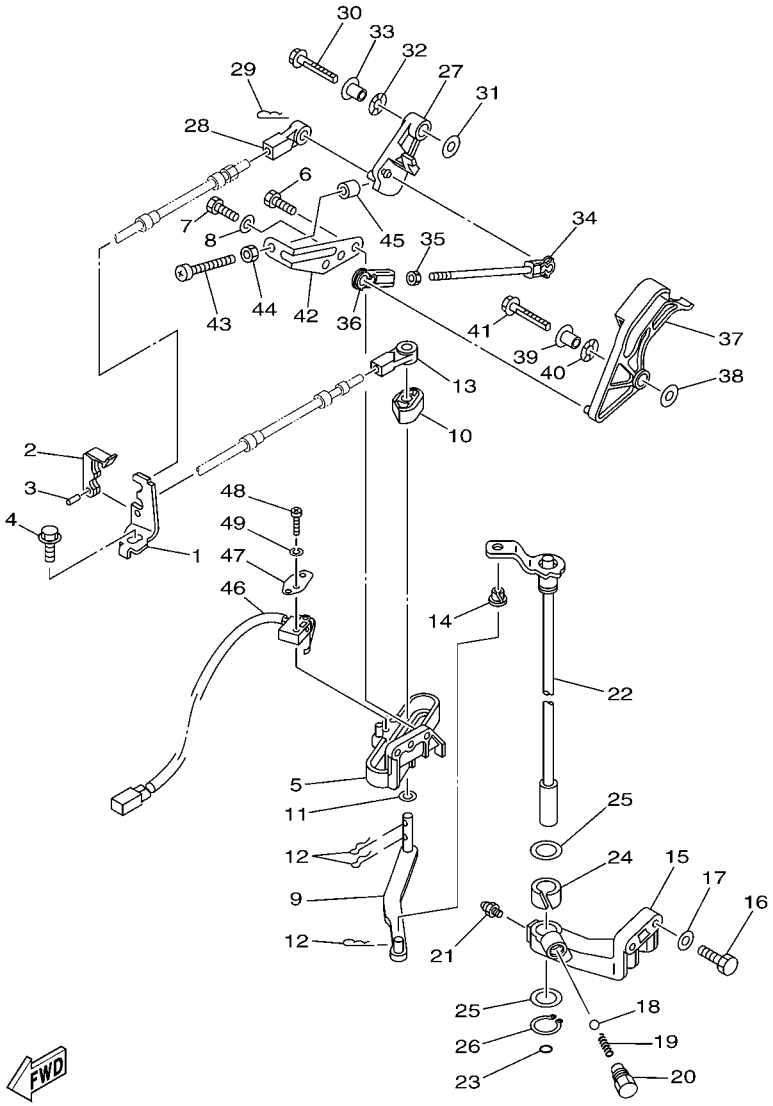

68F3100-C230

FIG. 23 CONTROL

REF. NO.	PART NO.	DESCRIPTION	68H3	68L3	68F3	68K3	68G3	REMARKS
1	68F–48531–10	BRACKET, REMOTE CONTROL 1	1	1	1	1	1	
2	663–48538–00	CLAMP, CABLE 1	1	1	1	1	1	
3	91690–30010	PIN, SPRING	1	1	1	1	1	
4	90109–06M80	BOLT	1	1	1	1	1	
5	68F–44117–01–1S	BRACKET	1	1	1	1	1	
6	97095–06020	BOLT	2	2	2	2	2	
7	97013–06012	BOLT	1	1	1	1	1	
8	92903–06600	WASHER, PLATE	1	1	1	1	1	
9	68F–44121–00	LEVER, SHIFT ROD	1	1	1	1	1	
10	68J–44122–01	BUSHING, SHIFT ROD LEVER	1	1	1	1	1	
11	90202–08M20	WASHER, PLATE	1	1	1	1	1	
12	90468–18008	CLIP	3	3	3	3	3	
13	6E5–48344–00	CABLE END, REMOTE CONTROL	1	1	1	1	1	
14	90386–06M12	BUSH	1	1	1	1	1	
15	6E5–44118–01–1S	BRACKET	1	1	1	1	1	
16	97013–08030	BOLT	2	2	2	2	2	
17	92903–08600	WASHER, PLATE	2	2	2	2	2	
18	93501–04M02	BALL	1	1	1	1	1	
19	90501–12082	SPRING, COMPRESSION	1	1	1	1	1	
20	648–42715–00	BUSHING	1	1	1	1	1	
21	93700–06M03	NIPPLE, GREASE	1	1	1	1	1	
22	6E5–44120–03	HANDLE GEAR SHIFT ASSY	1		1			L
	6E5–44120–23	HANDLE GEAR SHIFT ASSY	1	1	1	1	1	X
23	93210–09165	O-RING	1	1	1	1	1	
24	90386–16M66	BUSH	1	1	1	1	1	
25	90202–16061	WASHER, PLATE	2	2	2	2	2	
26	93410–16006	CIRCLIP	1	1	1	1	1	

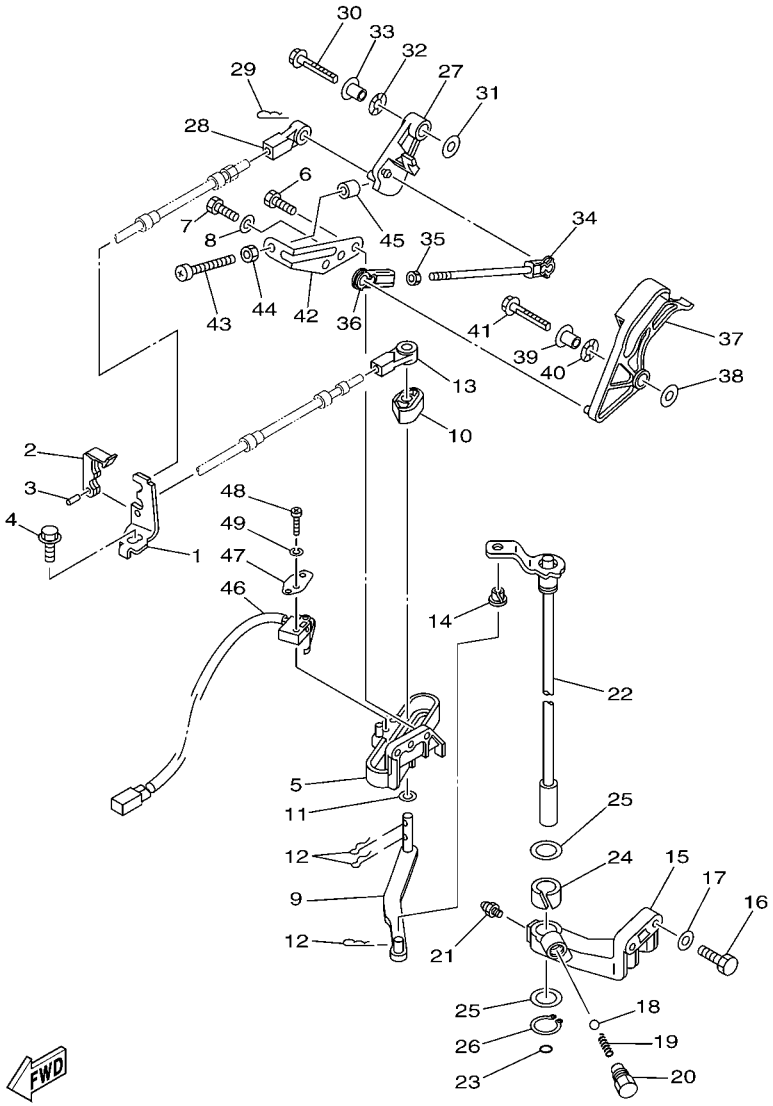

68F3100-C230

FIG. 23 CONTROL

REF. NO.	PART NO.	DESCRIPTION	68H3	68L3	68F3	68K3	68G3	REMARKS
27	67H–41632–00	LEVER, MAGNETO CONTROL	1	1	1	1	1	
28	6E5–48344–00	CABLE END, REMOTE CONTROL	1	1	1	1	1	
29	90468–18008	CLIP	1	1	1	1	1	
30	90119–06MA4	BOLT, WITH WASHER	1	1	1	1	1	
31	90201–06M31	WASHER, PLATE	1	1	1	1	1	
32	90206–10M04	WASHER, WAVE	1	1	1	1	1	
33	90387–06M29	COLLAR	1	1	1	1	1	
34	61A–41237–00	JOINT, LINK	1	1	1	1	1	
35	95380–05600	NUT	1	1	1	1	1	
36	682–41237–00	JOINT, LINK	1	1	1	1	1	
37	68F–41213–00	CAM, ACCEL.	1	1	1	1	1	
38	90201–06M31	WASHER, PLATE	1	1	1	1	1	
39	90387–06M29	COLLAR	1	1	1	1	1	
40	90206–10M04	WASHER, WAVE	1	1	1	1	1	
41	90119–06MA4	BOLT, WITH WASHER	1	1	1	1	1	
42	68F–42744–00	STAY	1	1	1	1	1	
43	90157–06M11	SCREW, PAN HEAD	1	1	1	1	1	
44	95380–06600	NUT, HEXAGON	1	1	1	1	1	
45	688–44194–00	CAP	1	1	1	1	1	
46	60V–8259F–00	SWITCH ASSY	1	1	1	1	1	
47	61A–82588–01	PLATE	1	1	1	1	1	
48	97885–04016	SCREW, PAN HEAD	2	2	2	2	2	
49	92995–04100	WASHER	2	2	2	2	2	

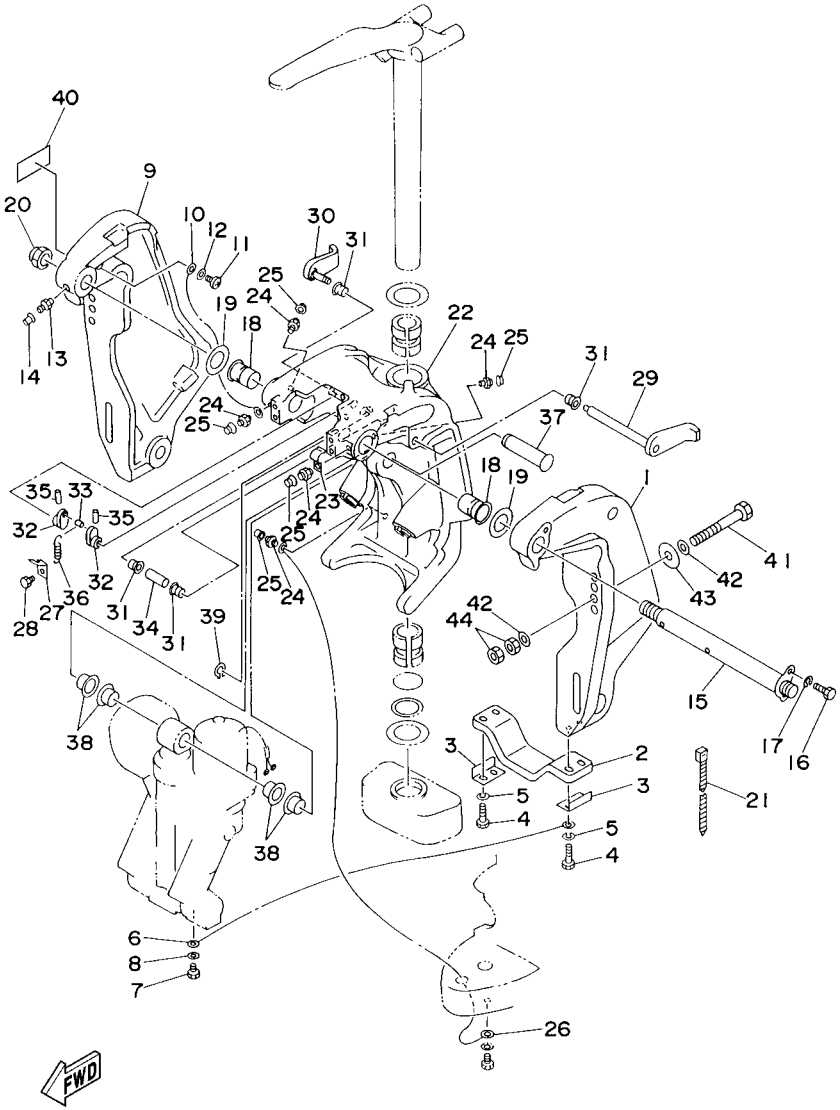

6N41100-2180

FIG. 24 BRACKET 1

REF. NO.	PART NO.	DESCRIPTION	68H3	68L3	68F3	68K3	68G3	REMARKS
1	64E–43111–02–8D	BRACKET, CLAMP	1	1	1	1	1	
2	6G5–45251–02	ANODE	1	1	1	1	1	
3	6G5–44526–00	PLATE	2	2	2	2	2	
4	97095–06030	BOLT	4	4	4	4	4	
5	92995–06100	WASHER, SPRING	4	4	4	4	4	
6	6E5–82148–00	WIRE, LEAD 4	1	1	1	1	1	
7	97095–06010	BOLT	1	1	1	1	1	
8	92995–06600	WASHER	1	1	1	1	1	
9	64E–43112–02–8D	BRACKET, CLAMP	1	1	1	1	1	
10	6E5–82148–00	WIRE, LEAD 4	1	1	1	1	1	
11	97880–06012	SCREW, PAN HEAD	1	1	1	1	1	
12	92990–06600	WASHER, PLATE	1	1	1	1	1	
13	93700–06M03	NIPPLE, GREASE	1	1	1	1	1	
14	663–45119–00	CAP, GREASE NIPPLE	1	1	1	1	1	AP
15	64E–43131–01	BOLT, CLAMP BRACKET	1	1	1	1	1	
16	97095–08020	BOLT	1	1	1	1	1	
17	92995–08100	WASHER	1	1	1	1	1	
18	90386–25M31	BUSH	2	2	2	2	2	
19	90201–26M59	WASHER, PLATE	2	2	2	2	2	
20	90185–22M11	NUT, SELF-LOCKING	1	1	1	1	1	
21	90465–11M10	CLAMP	1	1	1	1	1	
22	64E–43311–10–8D	BRACKET, SWIVEL 1	1		1			L
	64E–43311–20–8D	BRACKET, SWIVEL 1	1	1	1	1	1	X
23	90465–08M63	CLAMP	1	1	1	1	1	
24	93700–06M03	NIPPLE, GREASE	5	5	5	5	5	
25	663–45119–00	CAP, GREASE NIPPLE	5	5	5	5	5	AP
26	6E5–82147–00	WIRE, LEAD 4	1		1			L

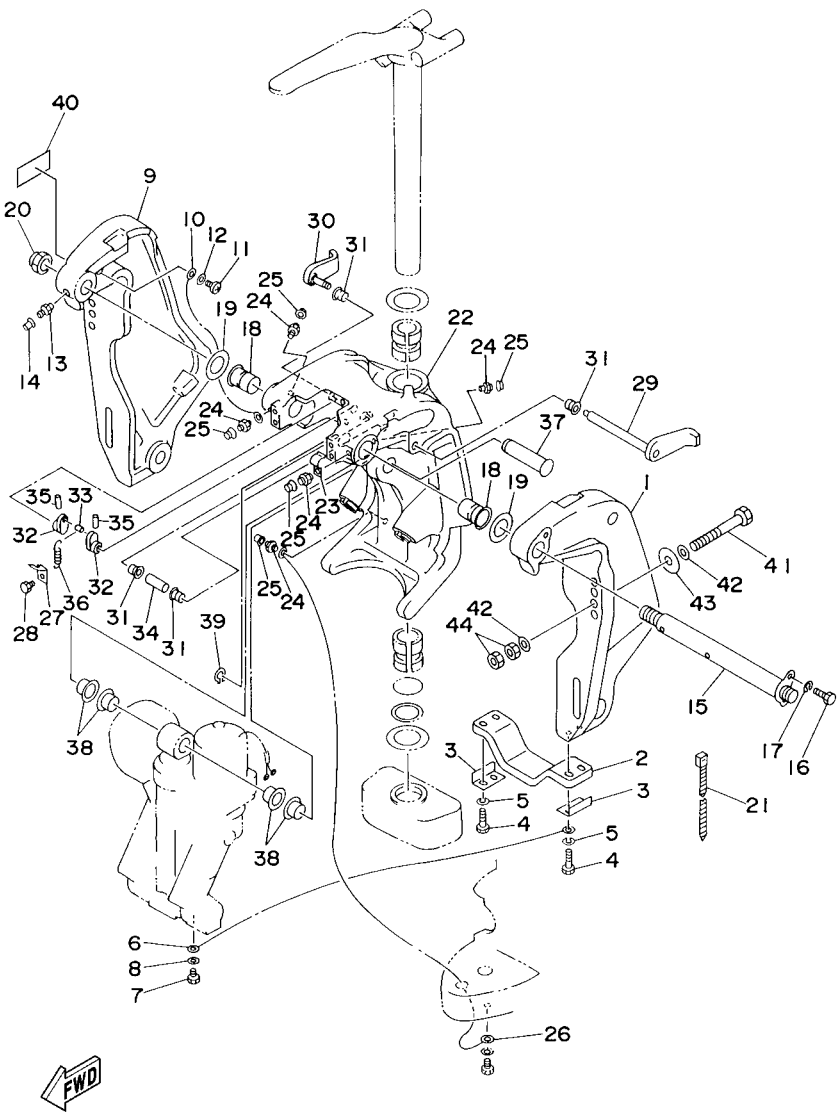

6N41100-2180

FIG. 24 BRACKET 1

REF. NO.	PART NO.	DESCRIPTION	68H3	68L3	68F3	68K3	68G3	REMARKS
26	6E5–82147–20	WIRE, LEAD 4	1	1	1	1	1	X
27	6G5–43144–00	HOOK, SPRING	1	1	1	1	1	
28	97095–06010	BOLT	1	1	1	1	1	
29	6G5–43181–02	LEVER, TILT STOP	1	1	1	1	1	
30	6G5–43185–02	LEVER, TILT STOP	1	1	1	1	1	
31	90386–10M16	BUSH	4	4	4	4	4	
32	6G5–43148–00	COLLAR, DISTANCE	2	2	2	2	2	
33	90249–06M19	PIN	1	1	1	1	1	
34	90387–10M05	COLLAR	1	1	1	1	1	
35	91690–30020	PIN, SPRING	2	2	2	2	2	
36	90506–14M24	SPRING, TENSION	1	1	1	1	1	
37	64E–43126–00	PIN, UPPER SHOCK MOUNT	1	1	1	1	1	
38	90386–22M98	BUSH	4	4	4	4	4	
39	93410–22M11	CIRCLIP	1	1	1	1	1	
40	63V–82377–50	LABEL (SPARK,IGNITION)	1		1			FOR CAN
41	90101–12M05	BOLT (L:130MM)	4	4	4	4	4	FOR USA,CAN,OCE
	90101–12M77	BOLT (L:150MM)	2	2	2	2	2	FOR USA,CAN,OCE
	90101–12M03	BOLT (L:115MM)			4		4	FOR CAR
42	90201–13M01	WASHER, PLATE	8	8	8	8	8	
43	90201–12M05	WASHER, PLATE	4	4	4	4	4	
44	95380–12600	NUT	8	8	8	8	8	

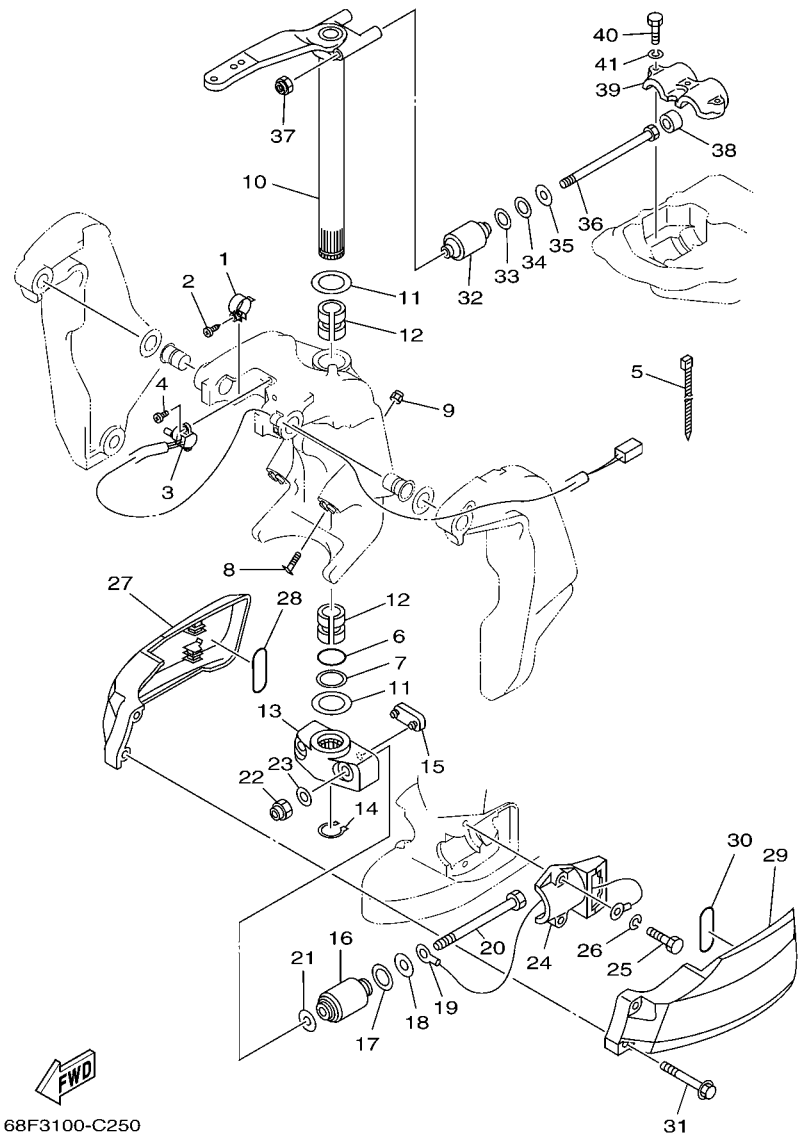

FIG. 25 BRACKET 2

REF. NO.	PART NO.	DESCRIPTION	68H3	68L3	68F3	68K3	68G3	REMARKS
1	64E–43139–02	CAM, TRIM SENDER	1	1	1	1	1	
2	97780–60525	SCREW, TAPPING	1	1	1	1	1	
3	67H–83672–00	TRIM SENDER	1	1	1	1	1	FOR USA,CAN
	64E–83672–02	TRIM SENDER	1	1	1	1	1	FOR OCE,CAR
4	97885–06016	SCREW, PAN HEAD	2	2	2	2	2	
5	90465–11M10	CLAMP	3	3	3	3	3	
6	93210–37MH7	O-RING	1	1	1	1	1	
7	90202–40M47	WASHER, PLATE	1	1	1	1	1	
8	61A–43376–00	BOLT, THRUST RECEIVER	2	2	2	2	2	
9	95780–10300	NUT, FLANGE	2	2	2	2	2	
10	68F–42510–A0–8D	STEERING BRACKET ASSY	1		1			L
	68F–42510–B0–8D	STEERING BRACKET ASSY	1	1	1	1	1	X
11	90201–38M60	WASHER, PLATE	2	2	2	2	2	
12	90386–38M32	BUSH	2	2	2	2	2	
13	68F–44551–00–8D	HOUSING, LOWER MOUNT RUBBER	1	1	1	1	1	
14	93410–37M04	CIRCLIP	1	1	1	1	1	
15	6E5–44575–00	DAMPER, LOWER MOUNT RUBBER	1	1	1	1	1	
16	6G5–44555–00–94	MOUNT DAMPER, LOWER SIDE	2	2	2	2	2	
17	90202–32M19	WASHER, PLATE	2	2	2	2	2	
18	90201–16M55	WASHER, PLATE	2	2	2	2	2	
19	6E5–82149–00	WIRE, LEAD 3	1	1	1	1	1	
20	90109–14MA5	BOLT	2	2	2	2	2	
21	90201–15M58	WASHER, PLATE	2	2	2	2	2	
22	90185–14M00	NUT, SELF-LOCKING	2	2	2	2	2	
23	92995–14600	WASHER	2	2	2	2	2	
24	68F–44552–00–8D	HOUSING, LOWER MOUNT RUBBER	2	2	2	2	2	
25	97095–10045	BOLT	4	4	4	4	4	

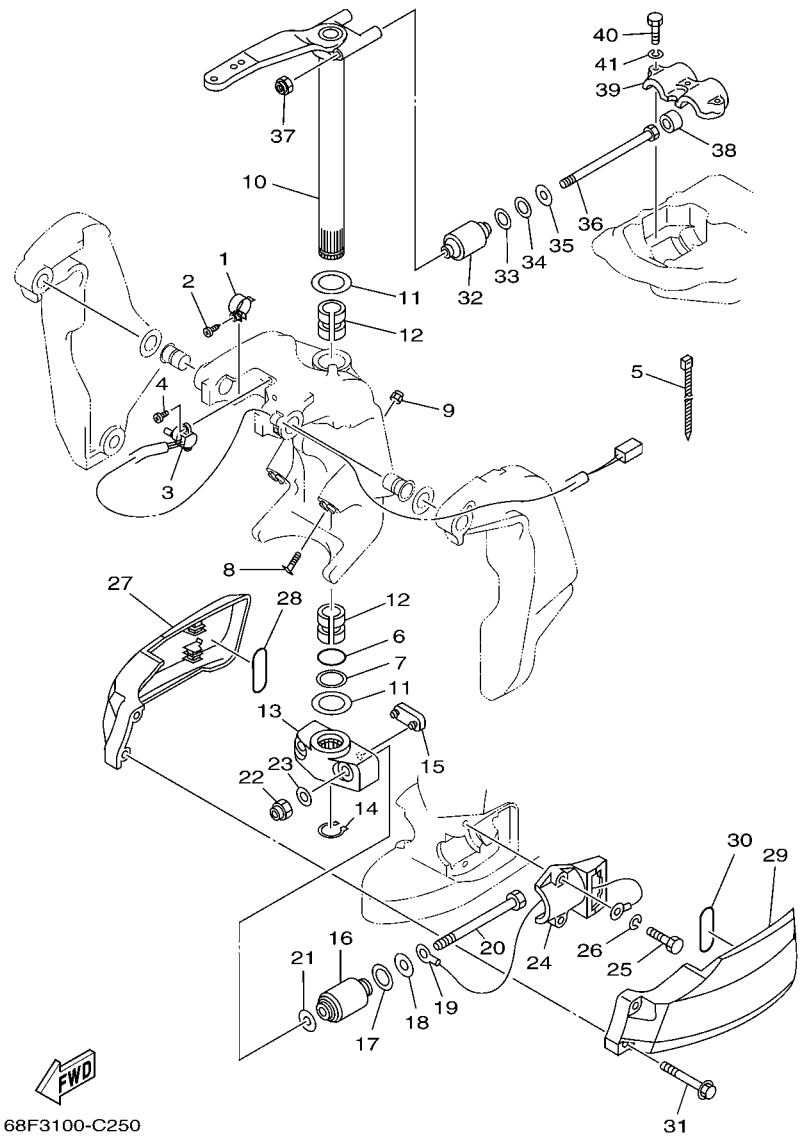

FIG. 25 BRACKET 2

REF. NO.	PART NO.	DESCRIPTION	68H3	68L3	68F3	68K3	68G3	REMARKS
26	92995–10100	WASHER	4	4	4	4	4	
27	68F–44553–00–4D	COVER, LOWER MOUNT	1	1	1	1	1	
28	93210–41042	O-RING	1	1	1	1	1	
29	68F–44556–00–4D	COVER, LOWER MOUNT 2	1	1	1	1	1	
30	93210–41042	O-RING	1	1	1	1	1	
31	90119–06MA8	BOLT, WITH WASHER	2	2	2	2	2	
32	6G5–44514–00–94	MOUNT DAMPER, UPPER SIDE	2	2	2	2	2	
33	90201–26M57	WASHER, PLATE	2	2	2	2	2	
34	90202–26M18	WASHER, PLATE	2	2	2	2	2	
35	90201–14M56	WASHER, PLATE	2	2	2	2	2	
36	90109–12M37	BOLT	2	2	2	2	2	
37	90185–12M12	NUT, SELF-LOCKING	2	2	2	2	2	
38	663–44575–00	DAMPER, LOWER MOUNT RUBBER	2	2	2	2	2	
39	6E5–44511–00–5B	COVER, UPPER MOUNT	1	1	1	1	1	
40	97095–10045	BOLT	3	3	3	3	3	
41	92995–10100	WASHER	3	3	3	3	3	

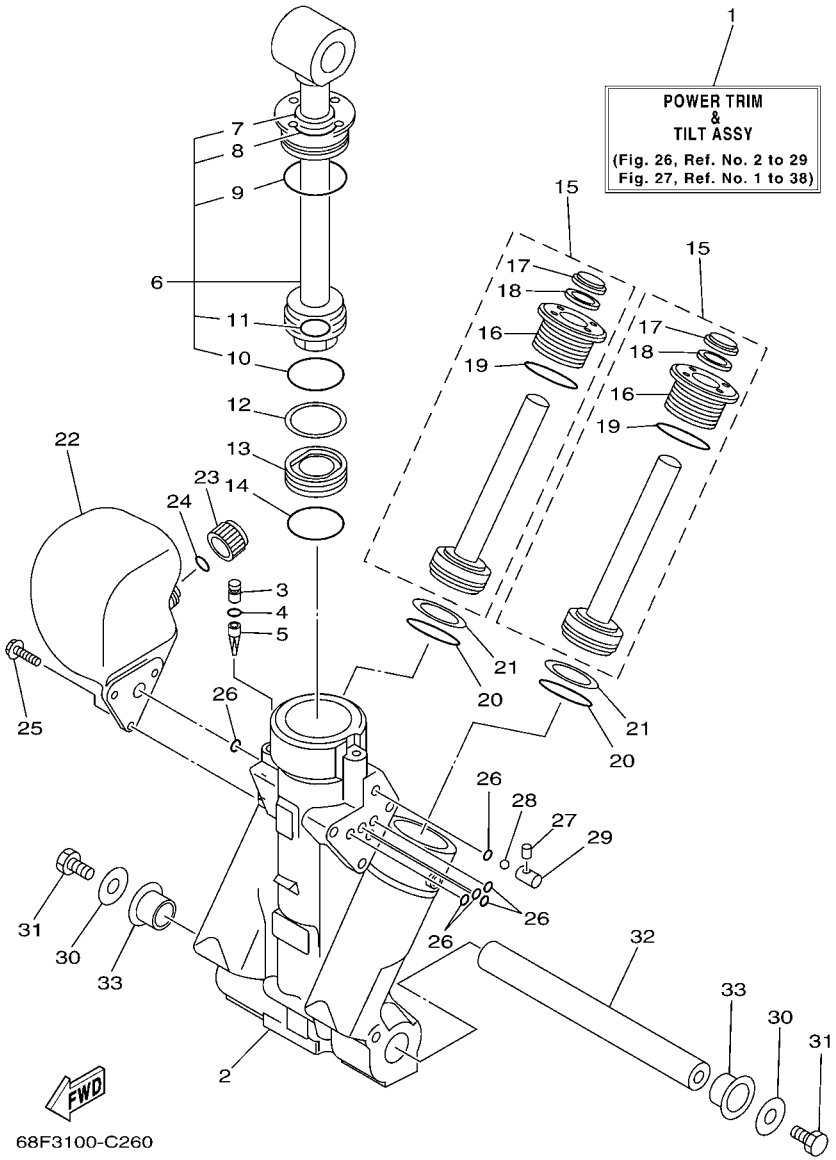

FIG. 26 POWER TRIM & TILT ASSY 1

REF. NO.	PART NO.	DESCRIPTION	68H3	68L3	68F3	68K3	68G3	REMARKS
1	68F–43800–01–4D	POWER TRIM & TILT ASSY	1	1	1	1	1	
2	64E–43825–01	HOUSING, TRIM & TILT	1	1	1	1	1	
3	64E–4388J–00	PLUG 2	1	1	1	1	1	
4	93210–10M74	O-RING	1	1	1	1	1	
5	64E–43817–00	FILTER 2	1	1	1	1	1	
6	64E–43810–00	TILT PISTON SUB ASSY	1	1	1	1	1	
7	64E–43898–00	.SEAL ,DUST 2	1	1	1	1	1	
8	64E–43867–00	.O-RING	1	1	1	1	1	
9	64E–43866–00	.O-RING	1	1	1	1	1	
10	6E5–43862–00	.O-RING	1	1	1	1	1	
11	64E–43883–00	.O-RING	1	1	1	1	1	
12	6E5–43872–00	RING, BACK UP	1	1	1	1	1	
13	6E5–43814–02	PISTON, FREE	1	1	1	1	1	
14	6E5–43862–00	O-RING	1	1	1	1	1	
15	64E–43820–00	TRIM PISTON SUB ASSY	2	2	2	2	2	
16	64E–43821–00	.SCREW, TRIM CYLINDER END	1	1	1	1	1	
17	64E–43822–00	.SEAL, TRIM DUST	1	1	1	1	1	
18	64E–4384J–00	.SEAL, TRIM DOWN	1	1	1	1	1	
19	6G5–43864–00	.O-RING	1	1	1	1	1	
20	6E5–43864–00	O-RING	2	2	2	2	2	
21	6E5–43874–01	RING, BACK UP	2	2	2	2	2	
22	64E–43828–00	BODY, RESERVOIR	1	1	1	1	1	
23	64E–43829–00	PLUG, RESERVOIR	1	1	1	1	1	
24	64E–43897–00	O-RING	1	1	1	1	1	
25	64E–4388E–00	BOLT ,SCREW (L:14MM)	3	3	3	3	3	
26	64E–43869–00	O-RING	6	6	6	6	6	
27	64E–4381G–00	PIN	1	1	1	1	1	

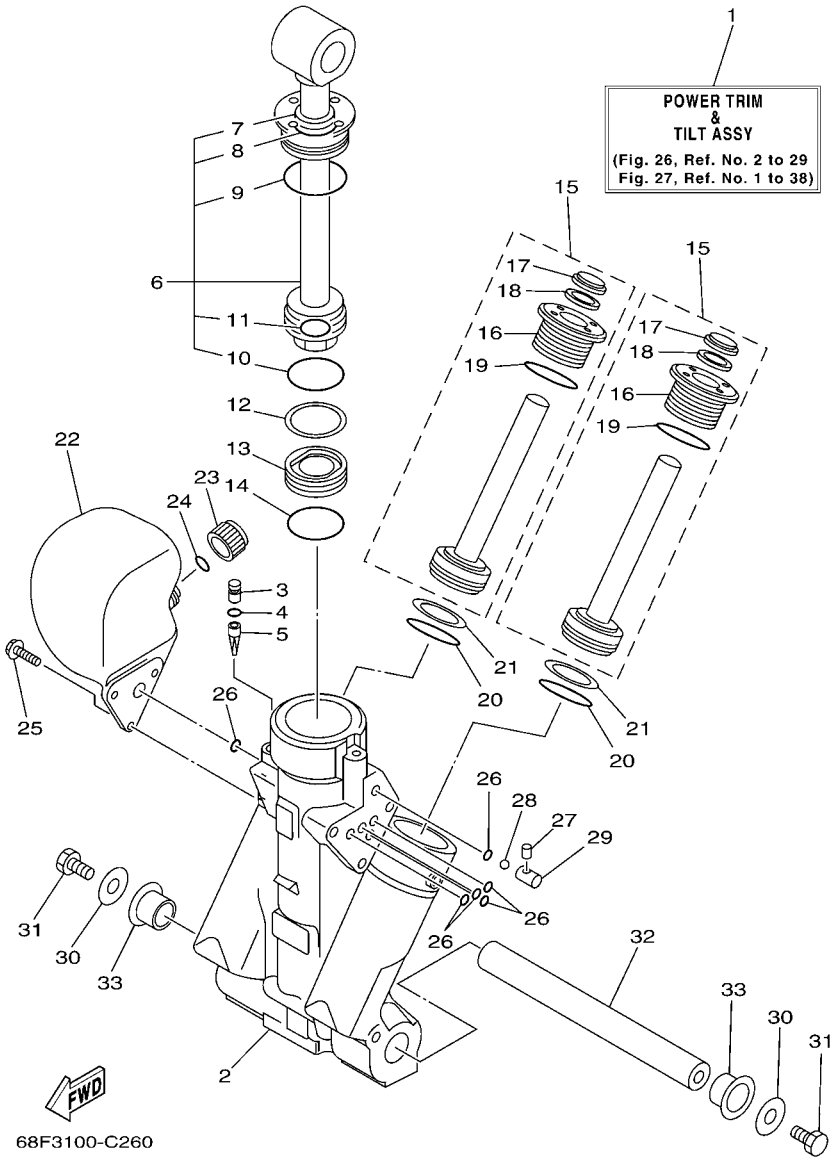

FIG. 26 POWER TRIM & TILT ASSY 1

REF. NO.	PART NO.	DESCRIPTION	68H3	68L3	68F3	68K3	68G3	REMARKS
28	6E5–43858–00	BALL	1	1	1	1	1	
29	64E–4382G–00	VALVE, SEAT	1	1	1	1	1	
30	90201–08M14	WASHER, PLATE	2	2	2	2	2	
31	97080–08016	BOLT	2	2	2	2	2	
32	64E–43818–01	PIN, LOWER SHOCK MOUNT	1	1	1	1	1	
33	90386–22M98	BUSH	2	2	2	2	2	

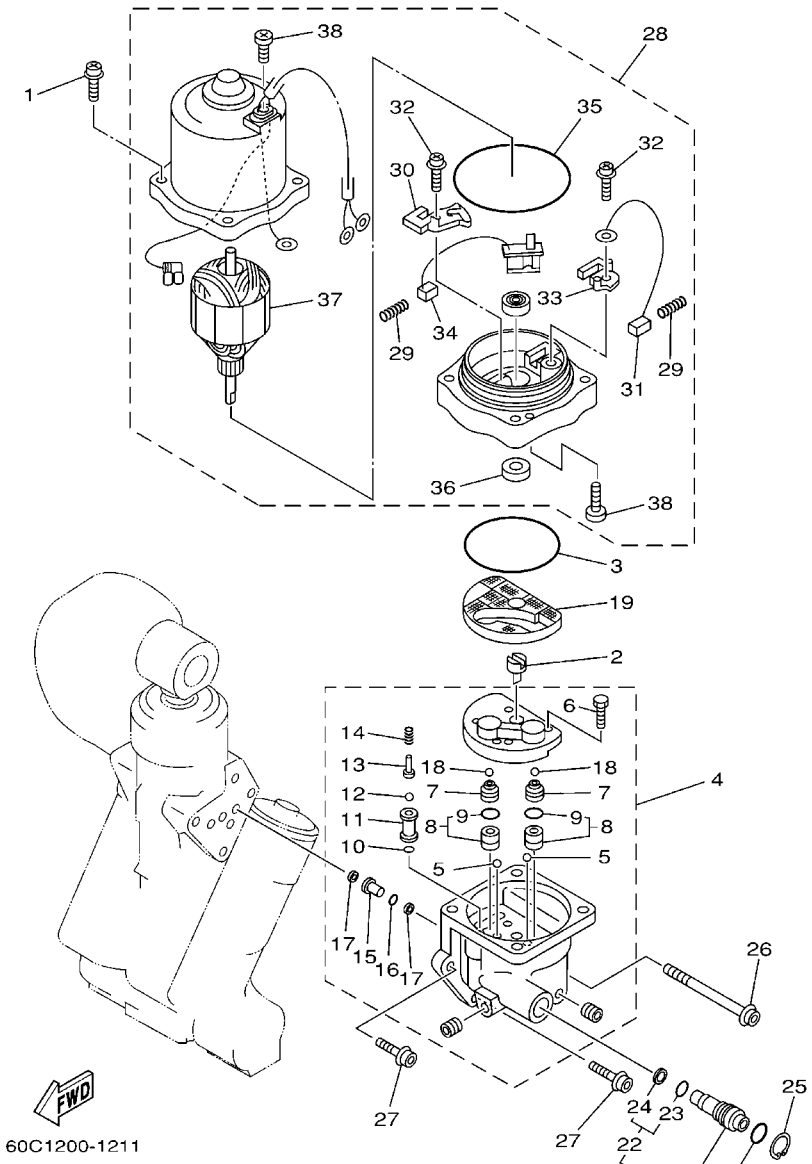

FIG. 27 POWER TRIM & TILT ASSY 2

REF. NO.	PART NO.	DESCRIPTION	68H3	68L3	68F3	68K3	68G3	REMARKS
1	64E–4388E–10	BOLT ,SCREW (L:34.7MM)	4	4	4	4	4	
2	64E–43831–00	CONNECTOR, SHAFT	1	1	1	1	1	
3	64E–43868–00	O-RING	1	1	1	1	1	
4	64E–43830–00	GEAR PUMP ASSY	1	1	1	1	1	
5	72X–43858–00	.BALL	2	2	2	2	2	
6	64E–43843–00	.SCREW, VALVE LOCK	4	4	4	4	4	
7	64E–43841–00	.PISTON, SHUTTLE	2	2	2	2	2	
8	64E–43802–00	.VALVE SUB ASSY	2	2	2	2	2	
9	6E5–43896–00	..O-RING	1	1	1	1	1	
10	6G5–43863–00	.O-RING	1	1	1	1	1	
11	64E–43851–00	.SEAT, RELIEF VALVE	1	1	1	1	1	
12	64E–43858–00	.BALL	1	1	1	1	1	
13	64E–43859–00	.PIN, VALVE SUPPORT	1	1	1	1	1	
14	64E–43855–00	.SPRING, UP RELIEF	1	1	1	1	1	
15	64E–43850–00	.VALVE SUB ASSY	1	1	1	1	1	
16	64E–43865–00	.O-RING	1	1	1	1	1	
17	64E–43816–00	.FILTER 1	2	2	2	2	2	
18	64E–43858–00	.BALL	2	2	2	2	2	
19	64E–43817–10	FILTER 2	1	1	1	1	1	
20	64E–43860–00	MANUAL VALVE SUB-ASSY	1	1	1	1	1	
21	72X–85075–L0	.O-RING	1	1	1	1	1	
22	64E–43827–00	.RING SET	1	1	1	1	1	
23	64E–4387A–00	..O-RING	1	1	1	1	1	
24	64E–43873–00	..RING, BACK UP	1	1	1	1	1	
25	64E–43875–00	RING, SNAP	1	1	1	1	1	
26	64E–43879–10	SCREW, WITH WASHER	1	1	1	1	1	
27	64E–43879–00	SCREW, WITH WASHER	2	2	2	2	2	

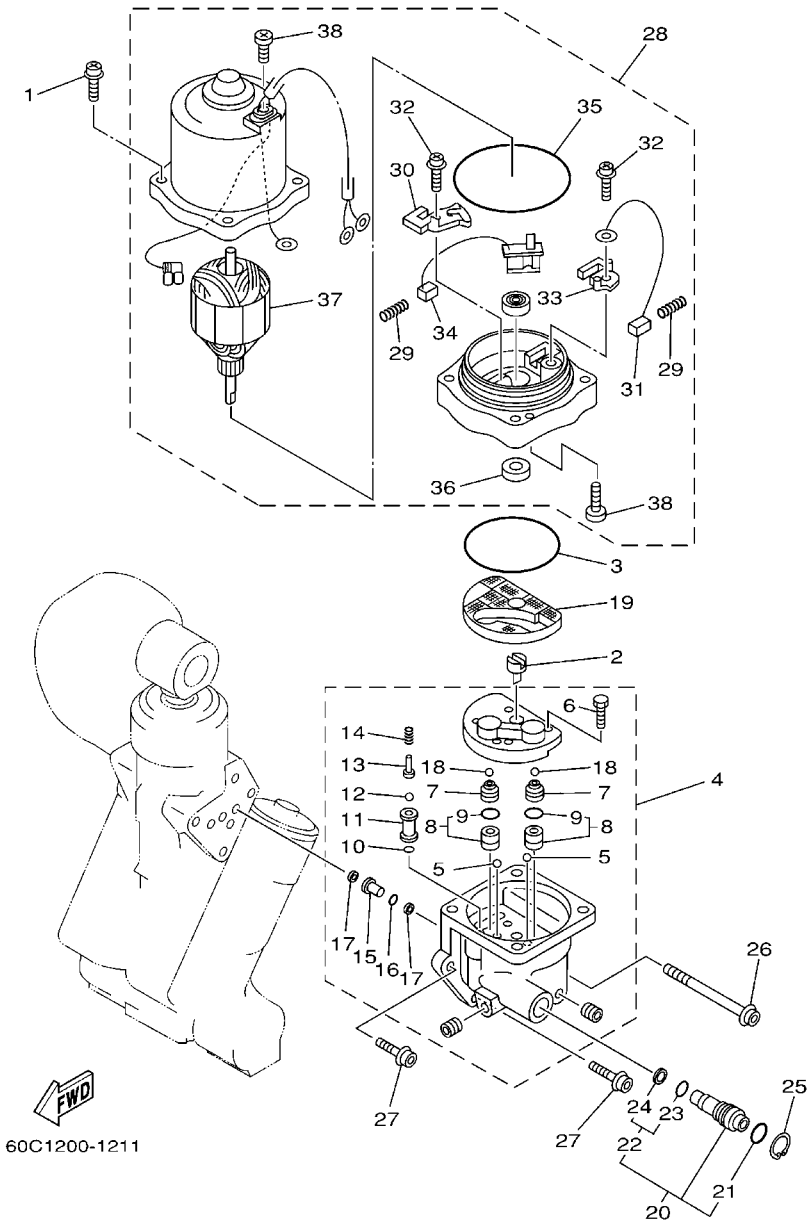

FIG. 27 POWER TRIM & TILT ASSY 2

REF. NO.	PART NO.	DESCRIPTION	68H3	68L3	68F3	68K3	68G3	REMARKS
28	67H–43880–01	MOTOR ASSY	1	1	1	1	1	
29	6H1–4386K–10	.SPRING, BRUSH	2	2	2	2	2	
30	64E–4380J–00	.HOLDER, BRUSH	1	1	1	1	1	
31	64E–43891–00	.BRUSH 1	1	1	1	1	1	
32	97607–04310	.SCREW,WITH WASHER	2	2	2	2	2	
33	64E–4380F–00	.HOLDER, BRUSH 2	1	1	1	1	1	
34	64E–43892–00	.BRUSH 2	1	1	1	1	1	
35	6G5–43865–00	.O-RING	1	1	1	1	1	
36	93102–08M43	.OIL SEAL	1	1	1	1	1	
37	64E–43805–00	.ARMATURE ASSY	1	1	1	1	1	
38	64E–43843–10	.SCREW, VALVE LOCK	3	3	3	3	3	

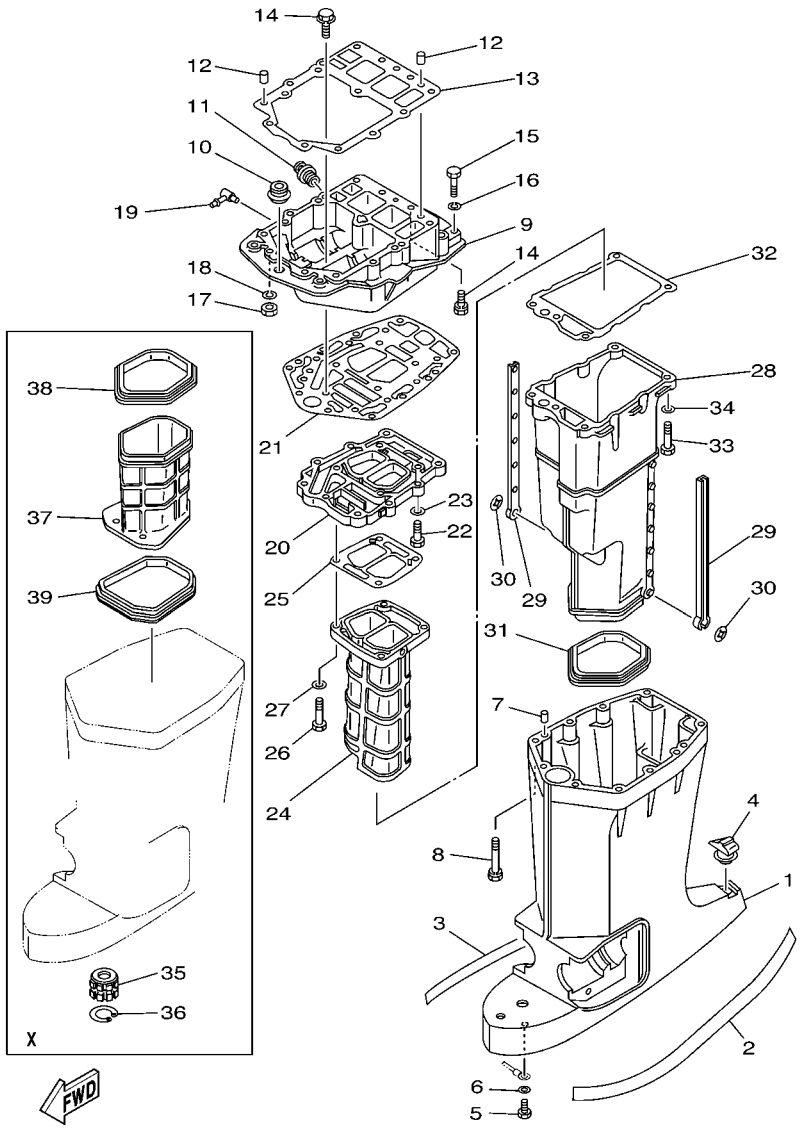

FIG. 28 UPPER CASING

REF. NO.	PART NO.	DESCRIPTION	68H3	68L3	68F3	68K3	68G3	REMARKS
1	6E5–45111–02–8D	CASING, UPPER	1		1			L
	6E5–45111–23–8D	CASING, UPPER	1	1	1	1	1	X
2	6R3–42791–41	MARK 1	1	1	1	1	1	
3	6R3–42792–41	MARK	1	1	1	1	1	
4	6E5–45155–00	CAP	1	1	1	1	1	
5	97095–06010	BOLT	1	1	1	1	1	
6	92995–06600	WASHER	1	1	1	1	1	
7	93608–12M05	PIN, DOWEL	2	2	2	2	2	
8	90119–08027	BOLT, WITH WASHER	6	6	6	6	6	
9	6G5–41137–11–94	GUIDE, EXHAUST	1	1	1	1	1	FLUSHING KIT
10	6E5–42724–00	GROMMET	1	1	1	1	1	
11	6G5–12581–00	JOINT, HOSE 1	1	1	1	1	1	
12	93608–12M05	PIN, DOWEL	2	2	2	2	2	
13	68F–45113–00	GASKET, UPPER CASING	1	1	1	1	1	
14	90119–08M79	BOLT, WITH WASHER	6	6	6	6	6	
15	97095–08045	BOLT	2	2	2	2	2	
16	92995–08100	WASHER	2	2	2	2	2	
17	95380–08700	NUT	2	2	2	2	2	
18	92995–08100	WASHER	2	2	2	2	2	
19	6H1–11372–00	NIPPLE, HOSE	1	1	1	1	1	FLUSHING KIT
20	6G5–41131–01–5B	MANIFOLD, EXT. 1	1	1	1	1	1	
21	6G5–45114–A1	GASKET, UPPER CASING	1	1	1	1	1	
22	97095–08030	BOLT	4	4	4	4	4	
23	92995–08600	WASHER	4	4	4	4	4	
24	64D–41132–00–5B	MANIFOLD, EXHAUST	1	1	1	1	1	
25	6G5–41134–A1	GASKET, EXHAUST MANIFOLD	1	1	1	1	1	
26	97095–08045	BOLT	4	4	4	4	4	

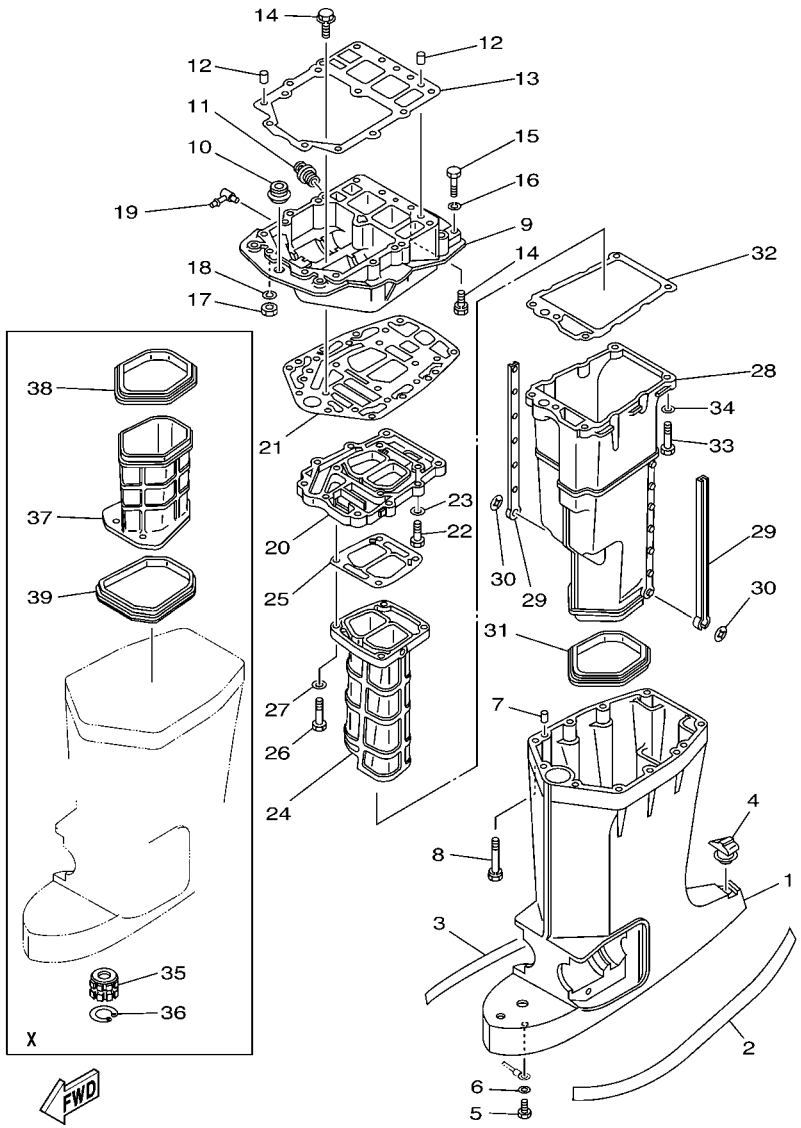

FIG. 28 UPPER CASING

REF. NO.	PART NO.	DESCRIPTION	68H3	68L3	68F3	68K3	68G3	REMARKS
27	92995–08600	WASHER	4	4	4	4	4	
28	6E5–14711–01–5B	MUFFLER 1	1	1	1	1	1	
29	6E5–14737–00	DAMPER, MUFFLER	2	2	2	2	2	
30	90183–05M02	NUT, SPRING	2	2	2	2	2	
31	6E5–45123–00	GASKET, MUFFLER	1	1	1	1	1	
32	6E5–41135–A0	GASKET, EXHAUST MANIFOLD	1	1	1	1	1	
33	97095–08045	BOLT	5	5	5	5	5	
34	92995–08600	WASHER	5	5	5	5	5	
35	6E5–45318–00	BUSHING, DRIVE SHAFT	1	1	1	1	1	X
36	93420–36M01	CIRCLIP	1	1	1	1	1	X
37	64D–14721–20–5B	MUFFLER 2	1	1	1	1	1	X
38	64D–45123–00	GASKET, MUFFLER	1	1	1	1	1	X
39	64D–45375–00	DAMPER, SEAL	1	1	1	1	1	X

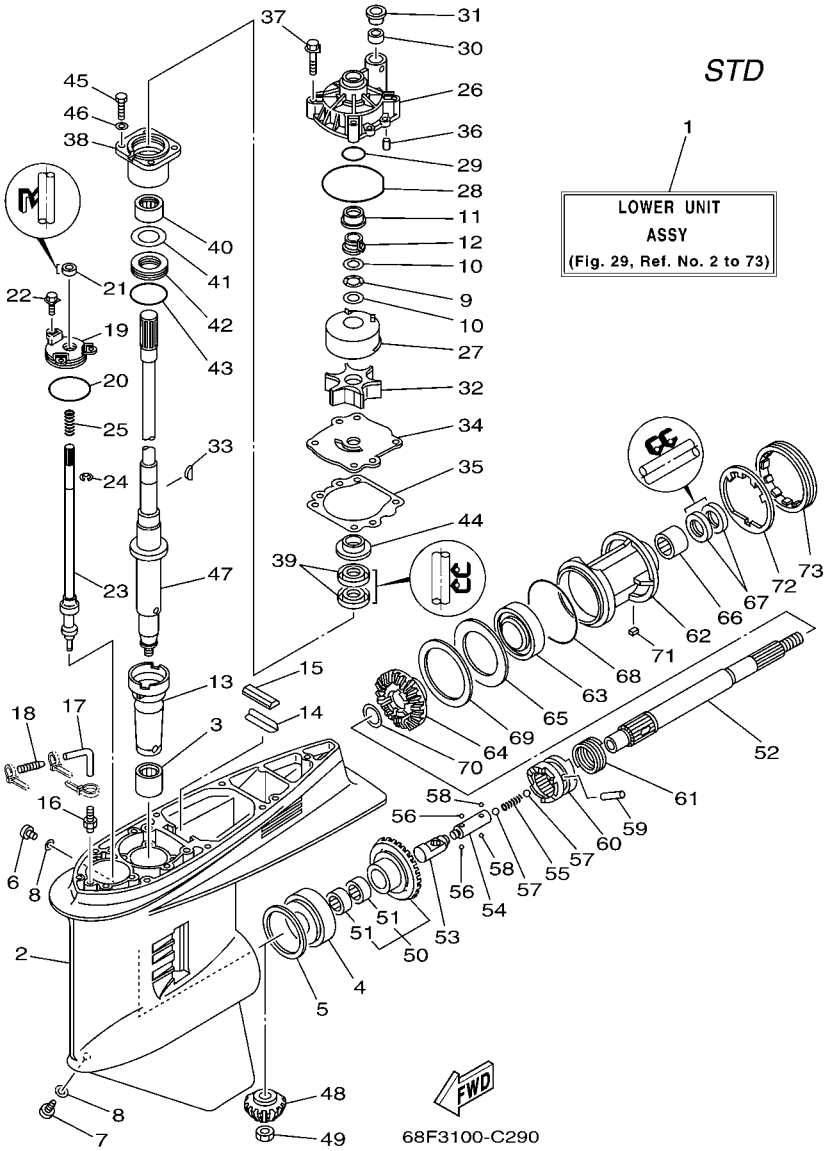

FIG. 29 LOWER CASING. DRIVE 1

REF. NO.	PART NO.	DESCRIPTION	68H3	68L3	68F3	68K3	68G3	REMARKS
1	64E–45300–02–8D	LOWER UNIT ASSY	1		1			L
	64E–45300–22–8D	LOWER UNIT ASSY	1	1	1			X
2	6J9–45301–05–8D	CASING, LOWER	1	1	1			
3	93311–928U5	BEARING	1	1	1			
4	93332–000V3	BEARING	1	1	1			
5	6G5–45567–01–10	SHIM (T:0.10MM)	1	1	1			UR
	6G5–45567–01–12	SHIM (T:0.12MM)	1	1	1			UR
	6G5–45567–01–15	SHIM (T:0.15MM)	1	1	1			UR
	6G5–45567–01–18	SHIM (T:0.18MM)	1	1	1			UR
	6G5–45567–01–30	SHIM (T:0.30MM)	1	1	1			UR
	6G5–45567–01–40	SHIM (T:0.40MM)	1	1	1			UR
	6G5–45567–01–50	SHIM (T:0.50MM)	1	1	1			UR
6	90340–08002	PLUG, STRAIGHT SCREW	1	1	1			
7	688–45341–10	PLUG, DRAIN	1	1	1			
8	90430–08020	GASKET	2	2	2			
9	90206–22M19	WASHER, WAVE	1	1	1			
10	90201–22M01	WASHER, PLATE	2	2	2			
11	61A–45527–00	COLLAR, DRIVE SHAFT	1	1	1			
12	61A–45538–00	SPACER 1	1	1	1			
13	6G5–45536–01	SLEEVE, DRIVE SHAFT	1	1	1			
14	663–45376–00–94	GUIDE, SEAL DAMPER	1		1			L
	64D–45376–00–94	GUIDE, SEAL DAMPER	1	1	1			X
15	688–45375–00	DAMPER, SEAL	1	1	1			
16	6E5–45378–00	NIPPLE, HOSE	1	1	1			
17	90445–07ME8	HOSE (L80)	1		1			L
	90445–07ME9	HOSE (L120)	1	1	1			X
18	6E5–83558–10	END, NIPPLE	1	1	1			

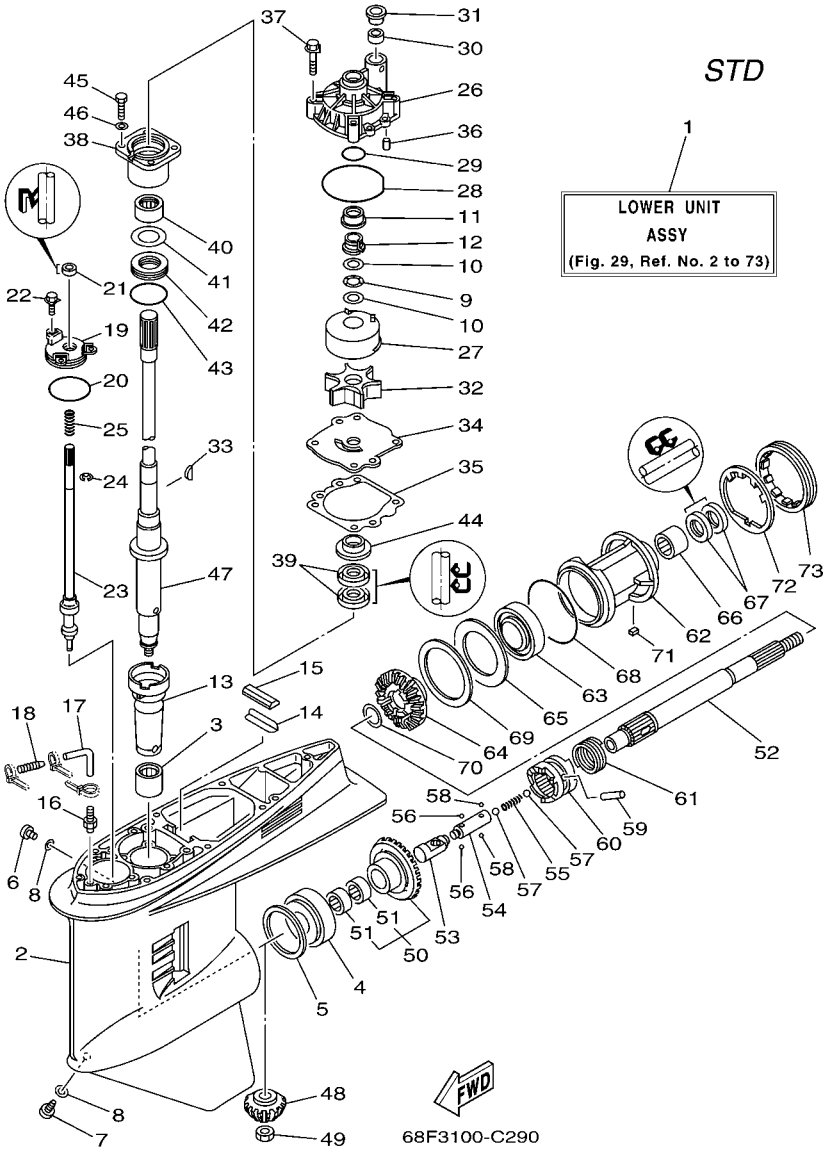

FIG. 29 LOWER CASING. DRIVE 1

REF. NO.	PART NO.	DESCRIPTION	68H3	68L3	68F3	68K3	68G3	REMARKS
19	6E5–45321–00	PLATE	1	1	1			
20	93210–58144	O-RING	1	1	1			
21	93106–09014	OIL SEAL	1	1	1			
22	90119–06M10	BOLT, WITH WASHER	3	3	3			
23	6G5–44150–02	SHIFT CAM ASSY	1	1	1			
24	99001–08600	CIRCLIP	1	1	1			
25	90501–11M10	SPRING, COMPRESSION	1	1	1			
26	61A–44311–01	HOUSING, WATER PUMP	1	1	1			
27	61A–44322–02	INSERT, CARTRIDGE	1	1	1			
28	93210–86M38	O-RING	1	1	1			
29	93210–37160	O-RING	1	1	1			
30	6E5–44365–00	DAMPER, WATER SEAL	1	1	1			
31	6E5–44312–00	COVER, WATER PUMP HOUSING	1	1	1			
32	6E5–44352–01	IMPELLER	1	1	1			
33	90280–04M05	KEY, WOODRUFF	1	1	1			
34	6G5–44323–00	OUTER PLATE, CARTRIDGE	1	1	1			
35	6E5–44315–A0	GASKET, WATER PUMP	1	1	1			
36	93606–12019	PIN, DOWEL	2	2	2			
37	90119–08M14	BOLT, WITH WASHER	4	4	4			
38	6E5–45331–00–94	HOUSING, BEARING	1	1	1			
39	93101–28M16	OIL SEAL	2	2	2			
40	93317–330U2	BEARING	1	1	1			
41	6E5–45587–01–10	SHIM (T:0.10MM)	1	1	1			UR
	6E5–45587–01–12	SHIM (T:0.12MM)	1	1	1			UR
	6E5–45587–01–15	SHIM (T:0.15MM)	1	1	1			UR
	6E5–45587–01–18	SHIM (T:0.18MM)	1	1	1			UR
	6E5–45587–01–30	SHIM (T:0.30MM)	1	1	1			UR

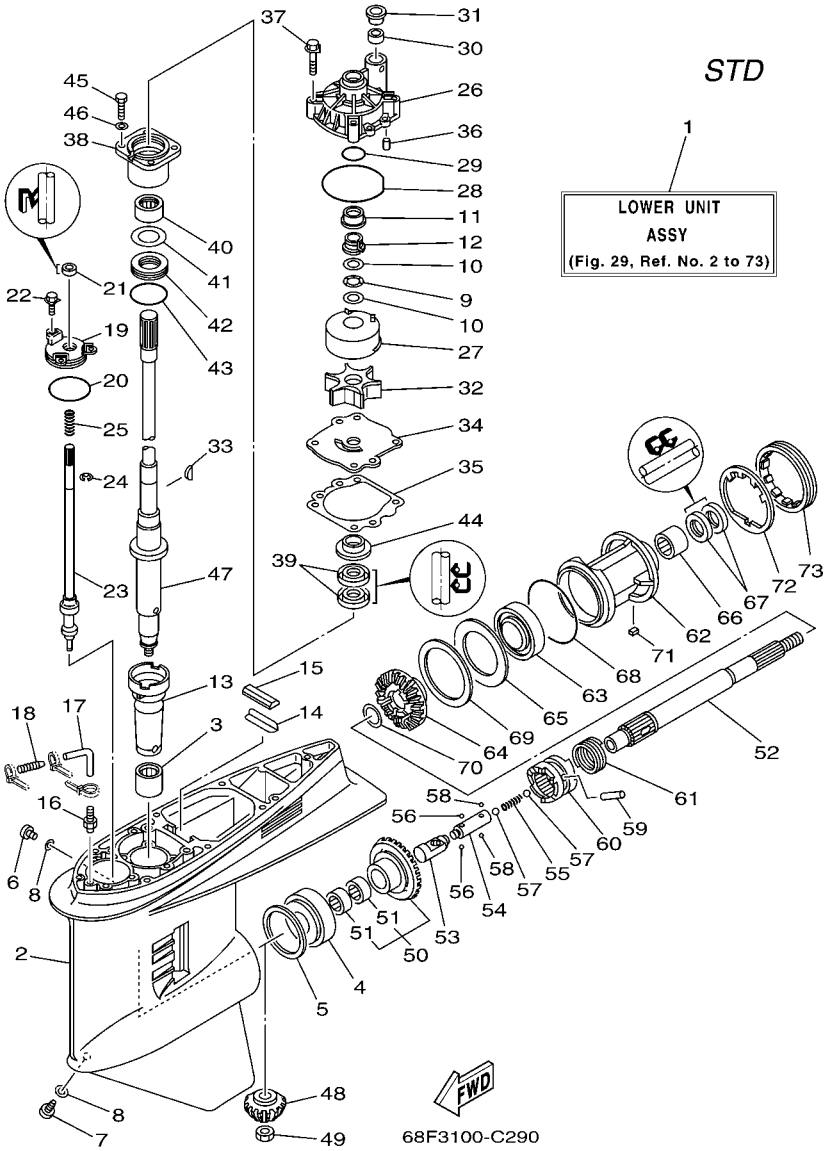

FIG. 29 LOWER CASING. DRIVE 1

REF. NO.	PART NO.	DESCRIPTION	68H3	68L3	68F3	68K3	68G3	REMARKS
41	6E5–45587–01–40	SHIM (T:0.40MM)	1	1	1			UR
	6E5–45587–01–50	SHIM (T:0.50MM)	1	1	1			UR
42	93341–930V2	BEARING	1	1	1			
43	93210–55M14	O-RING	1	1	1			
44	6E5–45344–00	COVER, OIL SEAL	1	1	1			
45	97095–08025	BOLT	4	4	4			
46	92995–08600	WASHER	4	4	4			
47	6G5–45501–01	DRIVE SHAFT COMP.	1		1			L
	6G5–45501–21	DRIVE SHAFT COMP.	1	1	1			X
48	6G5–45551–10	PINION	1	1	1			
49	90170–16M01	NUT	1	1	1			
50	6G5–45560–10	GEAR	1	1	1			
51	93315–425V3	.BEARING	2	2	2			
52	6J9–45611–01	SHAFT, PROPELLER	1	1	1			
53	6E5–45641–03	SHIFTER	1	1	1			
54	6E5–45634–01	SLIDE, SHIFT	1	1	1			
55	90501–16M37	SPRING, COMPRESSION	1	1	1			
56	93507–32009	BALL	2	2	2			
57	93511–32017	BALL	2	2	2			
58	93503–16003	BALL	2	2	2			
59	90250–08M07	PIN, STRAIGHT	1	1	1			
60	6G5–45631–10	CLUTCH, DOG	1	1	1			
61	6E5–45633–01	RING, CROSS PIN	1	1	1			
62	6J9–45332–00–94	HOUSING, BEARING	1	1	1			
63	93306–209U0	BEARING	1	1	1			
64	6G5–45571–02	GEAR	1	1	1			
65	6G5–45576–10	WASHER, THRUST	1	1	1			

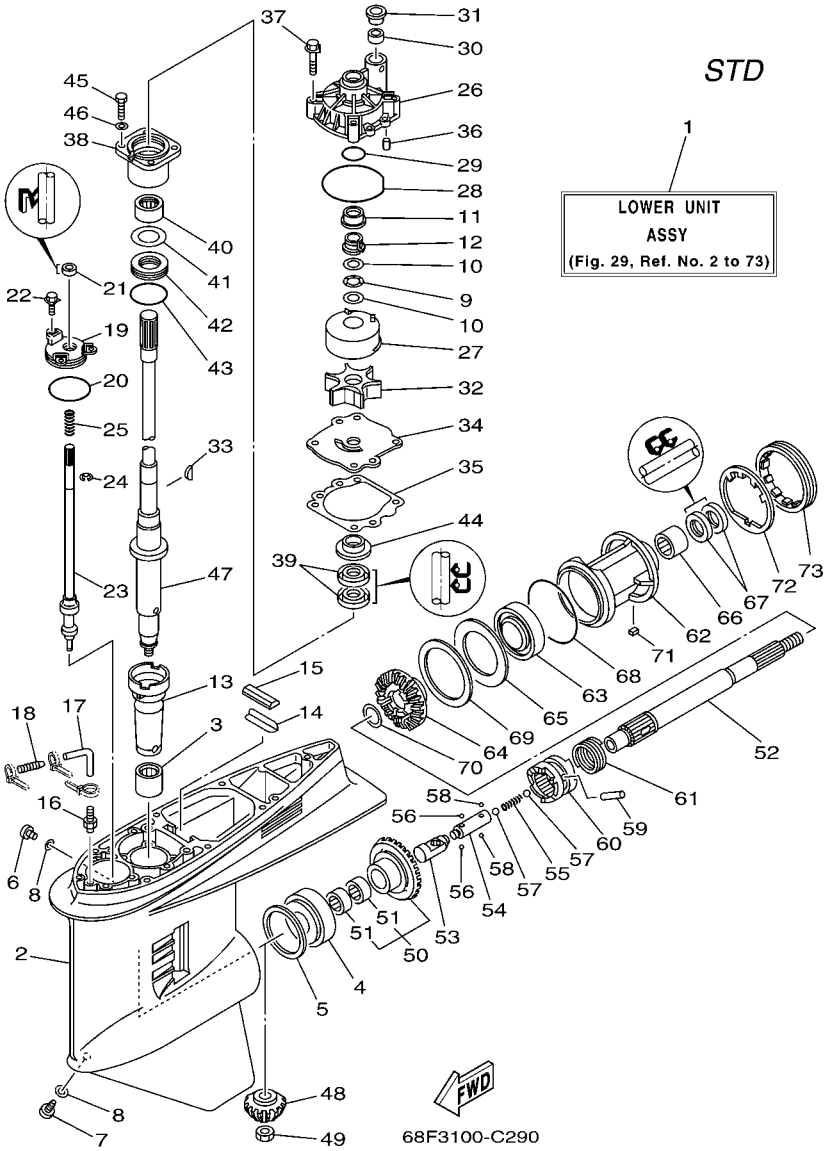

FIG. 29 LOWER CASING. DRIVE 1

REF. NO.	PART NO.	DESCRIPTION	68H3	68L3	68F3	68K3	68G3	REMARKS
66	93315–43061	BEARING	1	1	1			
67	93101–30M17	OIL SEAL	2	2	2			
68	93210–97M55	O-RING	1	1	1			
69	6G5–45577–02–10	SHIM (T:0.10MM)	1	1	1			UR
	6G5–45577–02–12	SHIM (T:0.12MM)	1	1	1			UR
	6G5–45577–02–15	SHIM (T:0.15MM)	1	1	1			UR
	6G5–45577–02–18	SHIM (T:0.18MM)	1	1	1			UR
	6G5–45577–02–30	SHIM (T:0.30MM)	1	1	1			UR
	6G5–45577–02–40	SHIM (T:0.40MM)	1	1	1			UR
	6G5–45577–02–50	SHIM (T:0.50MM)	1	1	1			UR
70	90201–30M92	WASHER, PLATE	1	1	1			
71	90282–04M00	KEY, STRAIGHT	1	1	1			
72	6G5–45383–01	WASHER, CLAW	1	1	1			
73	6G5–45384–00	NUT	1	1	1			

FIG. 30 LOWER CASING. DRIVE 2

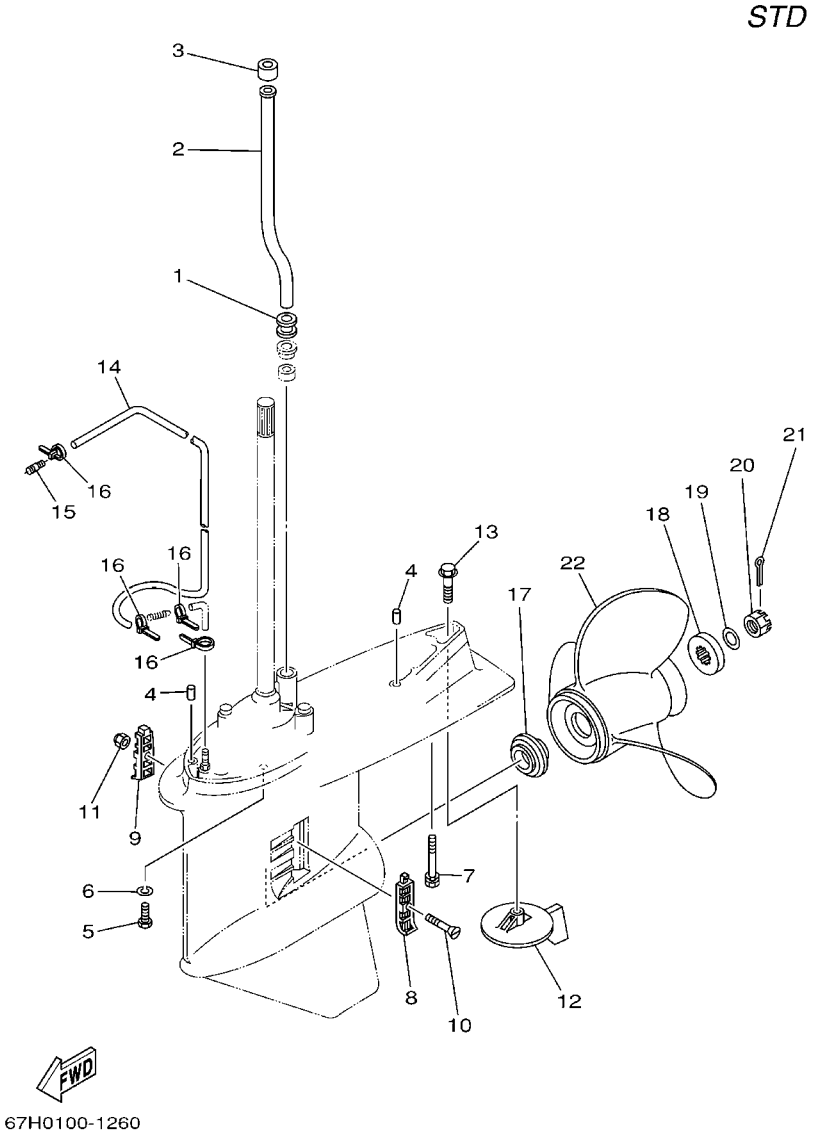

REF. NO.	PART NO.	DESCRIPTION	68H3	68L3	68F3	68K3	68G3	REMARKS
1	6E5–44366–00	DAMPER, WATER SEAL	1	1	1			
2	6E5–44361–00	TUBE, WATER	1		1			L
	6E5–44361–20	TUBE, WATER	1	1	1			X
3	6E5–44365–00	DAMPER, WATER SEAL	1	1	1			
4	93608–12M05	PIN, DOWEL	2	2	2			
5	97075–10045	BOLT	6	6	6			
6	92995–10100	WASHER	6	6	6			
7	90119–10M89	BOLT, WITH WASHER	1	1	1			
8	6J9–45214–00	COVER, WATER INLET	1	1	1			
9	6J9–45215–00	COVER, WATER INLET	1	1	1			
10	90152–05M08	SCREW, COUNTERSUNK	1	1	1			
11	90185–05002	NUT, SELF-LOCKING	1	1	1			
12	6J9–45371–01	TAB-TRIM	1	1	1			
13	90105–10M00	BOLT, FLANGE	1	1	1			
14	90445–07M33	HOSE (L1080)	1	1	1			
15	6E5–83558–00	END, NIPPLE	1	1	1			
16	90465–11M10	CLAMP	4	4	4			
17	6E5–45987–01	SPACER	1	1	1			
18	688–45997–01	SPACER	1	1	1			
19	92990–18200	WASHER	1	1	1			
20	90171–18M04	NUT, CASTLE	1	1	1			
21	91490–40030	PIN, COTTER	1	1	1			
22	6G5–45941–00–98	PROPELLER (3X15-1/4"X15"-M)	1	1	1			UR
	6G5–45943–01–98	PROPELLER (3X13-3/4"X21"-M)	1	1	1			UR
	6G5–45945–01–98	PROPELLER (3X14"X19"-M)	1	1	1			UR
	6G5–45947–01–98	PROPELLER (3X14-1/2"X17"-M)	1	1	1			UR
	6G5–45949–00–98	PROPELLER (3X13-1/2"X23"-M)	1	1	1			UR

FIG. 30 LOWER CASING. DRIVE 2

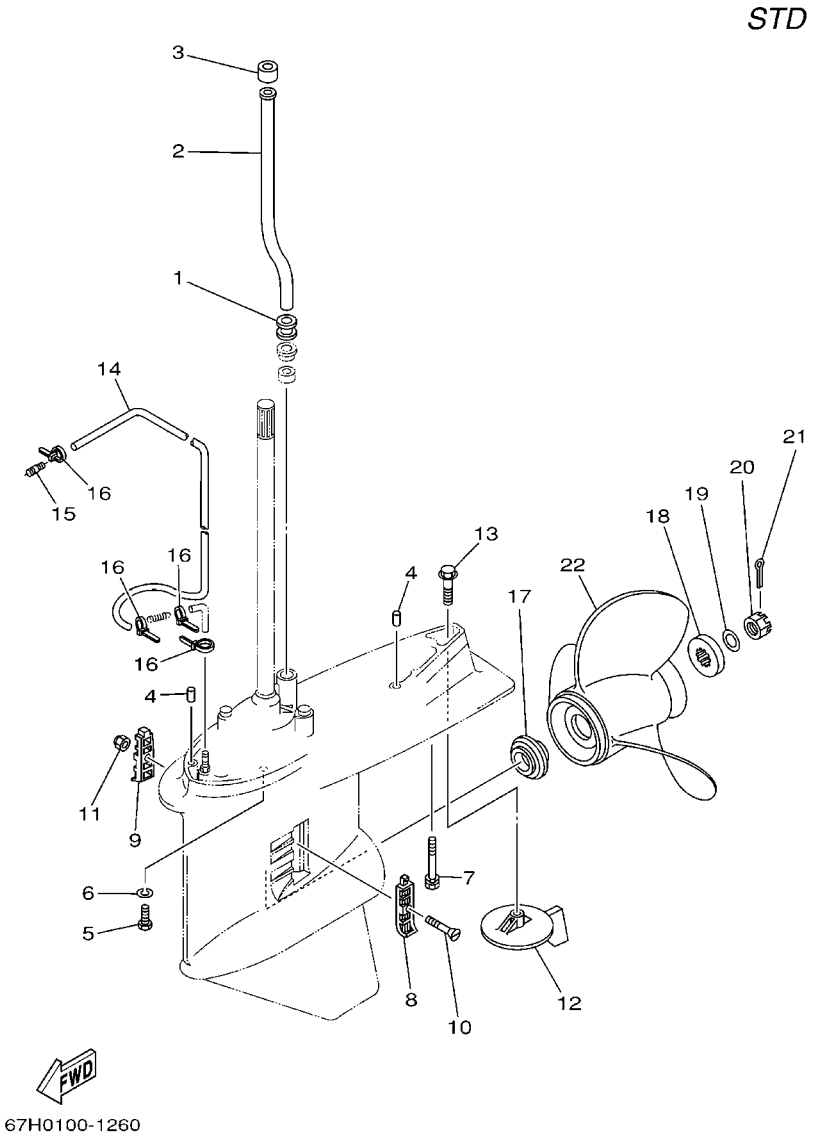

REF. NO.	PART NO.	DESCRIPTION	68H3	68L3	68F3	68K3	68G3	REMARKS
22	6G5–45952–00–98	PROPELLER (3X14-5/8"X16"-M)	1	1	1			UR
	6G5–45930–00–98	PROPELLER (3X13-3/8"X25"-M)	1	1	1			UR
	6G5–45932–00–98	PROPELLER (3X15-3/4"X13"-M)	1	1	1			UR
	6G5–45970–02–98	PROPELLER (3X15-1/4"X15"-M)	1	1	1			UR
	6G5–45972–02–98	PROPELLER (3X13-3/4"X21"-M)	1	1	1			UR
	6G5–45974–03–98	PROPELLER (3X13-3/4"X19"-M2)	1	1	1			UR
	6G5–45976–01–98	PROPELLER (3X13-3/8"X23"-M)	1	1	1			UR
	6G5–45978–03–98	PROPELLER (3X13-3/4"X17"-M2)	1	1	1			UR
	6R4–45970–A0	PROPELLER (3X15-1/4"X19"-M)	1	1	1			UR
	6R4–45972–A0	PROPELLER (3X14-7/8"X21"-M)	1	1	1			UR
	6R4–45974–A0	PROPELLER (3X14-1/2"X23"-M)	1	1	1			UR
	6R4–45976–A0	PROPELLER (3X14-1/2"X15"-M)	1	1	1			UR
	6R4–45978–A0	PROPELLER (3X15-1/4"X17"-M)	1	1	1			UR

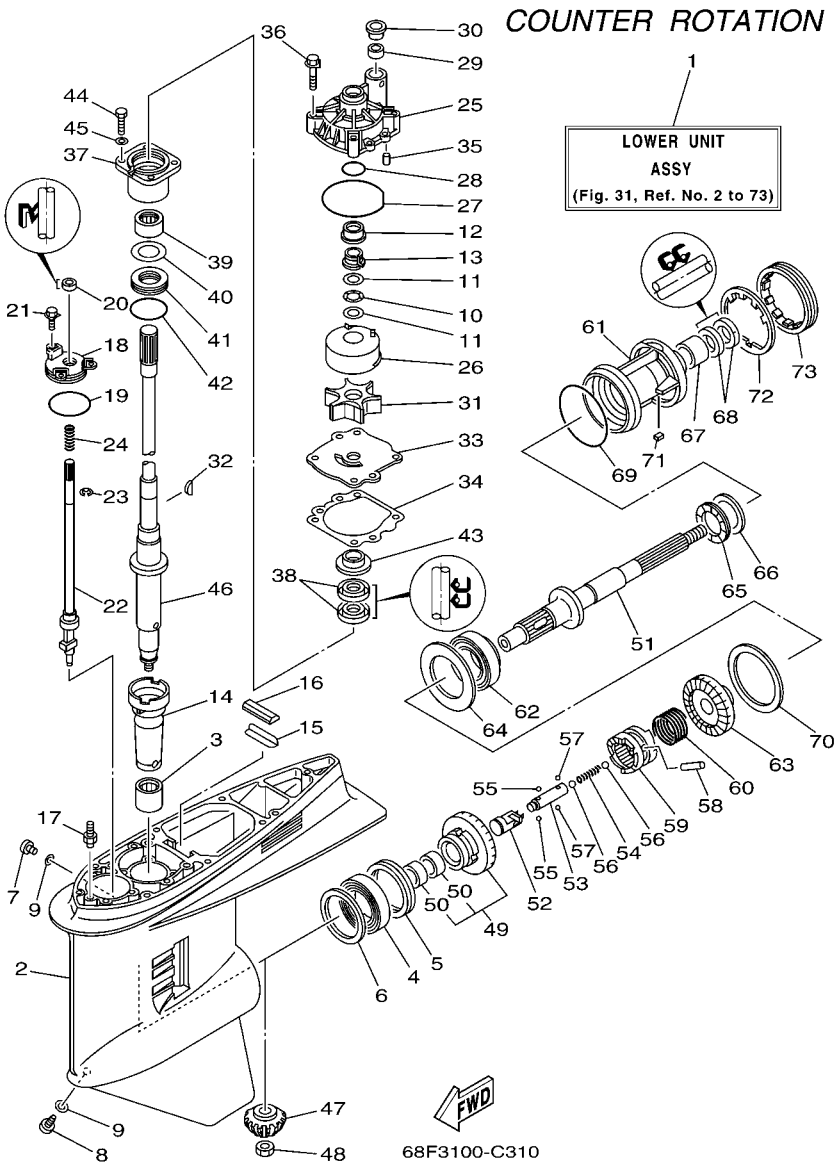

FIG. 31 LOWER CASING. DRIVE 3

REF. NO.	PART NO.	DESCRIPTION	68H3	68L3	68F3	68K3	68G3	REMARKS
1	64H–45300–22–8D	LOWER UNIT ASSY				1	1	X
2	6J9–45301–05–8D	CASING, LOWER				1	1	
3	93311–928U5	BEARING				1	1	
4	93390–000U2	BEARING				1	1	
5	93341–465U4	BEARING				1	1	
6	6G5–45567–01–10	SHIM (T:0.10MM)				1	1	UR
	6G5–45567–01–12	SHIM (T:0.12MM)				1	1	UR
	6G5–45567–01–15	SHIM (T:0.15MM)				1	1	UR
	6G5–45567–01–18	SHIM (T:0.18MM)				1	1	UR
	6G5–45567–01–30	SHIM (T:0.30MM)				1	1	UR
	6G5–45567–01–40	SHIM (T:0.40MM)				1	1	UR
	6G5–45567–01–50	SHIM (T:0.50MM)				1	1	UR
7	90340–08002	PLUG, STRAIGHT SCREW				1	1	
8	688–45341–10	PLUG, DRAIN				1	1	
9	90430–08020	GASKET				2	2	
10	90206–22M19	WASHER, WAVE				1	1	
11	90201–22M01	WASHER, PLATE				2	2	
12	61A–45527–00	COLLAR, DRIVE SHAFT				1	1	
13	61A–45538–00	SPACER 1				1	1	
14	6G5–45536–01	SLEEVE, DRIVE SHAFT				1	1	
15	64D–45376–00–94	GUIDE, SEAL DAMPER				1	1	X
16	688–45375–00	DAMPER, SEAL				1	1	
17	6J8–45378–00	NIPPLE, HOSE				1	1	
18	6E5–45321–00	PLATE				1	1	
19	93210–58144	O-RING				1	1	
20	93106–09014	OIL SEAL				1	1	
21	90119–06M10	BOLT, WITH WASHER				3	3	

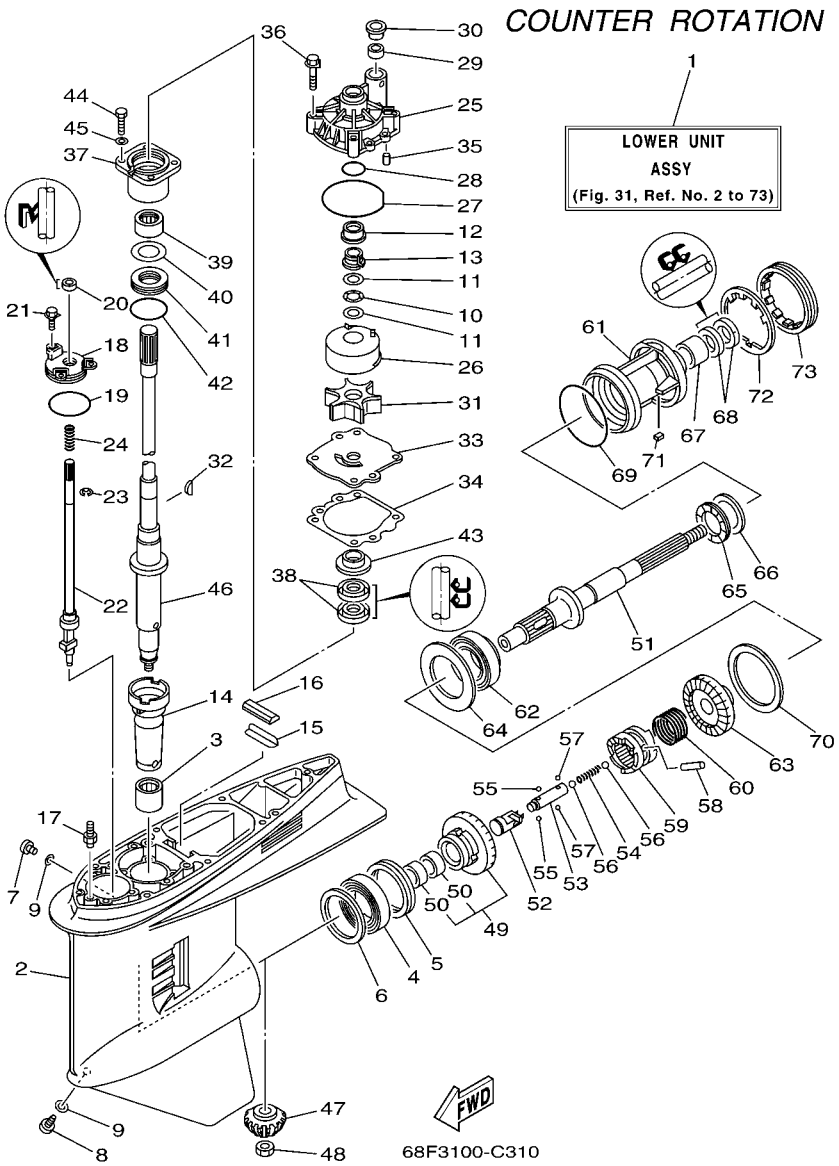

FIG. 31 LOWER CASING. DRIVE 3

REF. NO.	PART NO.	DESCRIPTION	68H3	68L3	68F3	68K3	68G3	REMARKS
22	6K1–44150–01	SHIFT CAM ASSY				1	1	
23	99001–08600	CIRCLIP				1	1	
24	90501–11M10	SPRING, COMPRESSION				1	1	
25	61A–44311–01	HOUSING, WATER PUMP				1	1	
26	61A–44322–02	INSERT, CARTRIDGE				1	1	
27	93210–86M38	O-RING				1	1	
28	93210–37160	O-RING				1	1	
29	6E5–44365–00	DAMPER, WATER SEAL				1	1	
30	6E5–44312–00	COVER, WATER PUMP HOUSING				1	1	
31	6E5–44352–01	IMPELLER				1	1	
32	90280–04M05	KEY, WOODRUFF				1	1	
33	6G5–44323–00	OUTER PLATE, CARTRIDGE				1	1	
34	6E5–44315–A0	GASKET, WATER PUMP				1	1	
35	93606–12019	PIN, DOWEL				2	2	
36	90119–08M14	BOLT, WITH WASHER				4	4	
37	6E5–45331–00–94	HOUSING, BEARING				1	1	
38	93101–28M16	OIL SEAL				2	2	
39	93317–330U2	BEARING				1	1	
40	6E5–45587–01–10	SHIM (T:0.10MM)				1	1	UR
	6E5–45587–01–12	SHIM (T:0.12MM)				1	1	UR
	6E5–45587–01–15	SHIM (T:0.15MM)				1	1	UR
	6E5–45587–01–18	SHIM (T:0.18MM)				1	1	UR
	6E5–45587–01–30	SHIM (T:0.30MM)				1	1	UR
	6E5–45587–01–40	SHIM (T:0.40MM)				1	1	UR
	6E5–45587–01–50	SHIM (T:0.50MM)				1	1	UR
41	93341–930V2	BEARING				1	1	
42	93210–55M14	O-RING				1	1	

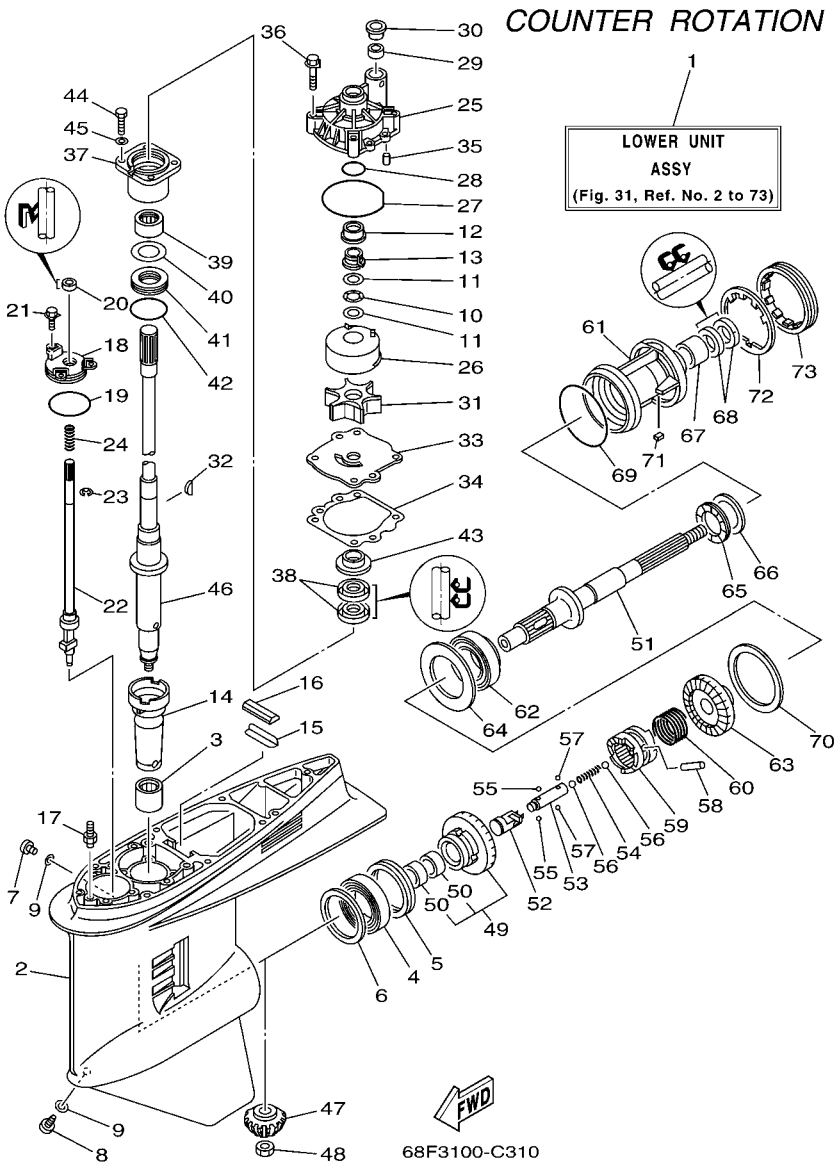

FIG. 31 LOWER CASING. DRIVE 3

REF. NO.	PART NO.	DESCRIPTION	68H3	68L3	68F3	68K3	68G3	REMARKS
43	6E5–45344–00	COVER, OIL SEAL				1	1	
44	97095–08025	BOLT				4	4	
45	92995–08600	WASHER				4	4	
46	6G5–45501–21	DRIVE SHAFT COMP.				1	1	X
47	6G5–45551–10	PINION				1	1	
48	90170–16M01	NUT				1	1	
49	6K1–45560–01	GEAR				1	1	
50	93315–425V3	.BEARING				2	2	
51	6K1–45611–10	SHAFT, PROPELLER				1	1	
52	6K1–45641–01	SHIFTER				1	1	
53	6E5–45634–01	SLIDE, SHIFT				1	1	
54	90501–16M37	SPRING, COMPRESSION				1	1	
55	93507–32009	BALL				2	2	
56	93511–32017	BALL				2	2	
57	93503–16003	BALL				2	2	
58	90250–08M07	PIN, STRAIGHT				1	1	
59	6G5–45631–10	CLUTCH, DOG				1	1	
60	6E5–45633–01	RING, CROSS PIN				1	1	
61	6K1–45332–01–94	HOUSING, BEARING				1	1	
62	93332–00048	BEARING				1	1	
63	6K1–45570–20	GEAR				1	1	
64	6K1–45576–00	WASHER, THRUST				1	1	
65	93341–440U5	BEARING				1	1	
66	6K1–45578–01–10	SHIM (T:0.10MM)				1	1	UR
	6K1–45578–01–12	SHIM (T:0.12MM)				1	1	UR
	6K1–45578–01–15	SHIM (T:0.15MM)				1	1	UR
	6K1–45578–01–18	SHIM (T:0.18MM)				1	1	UR

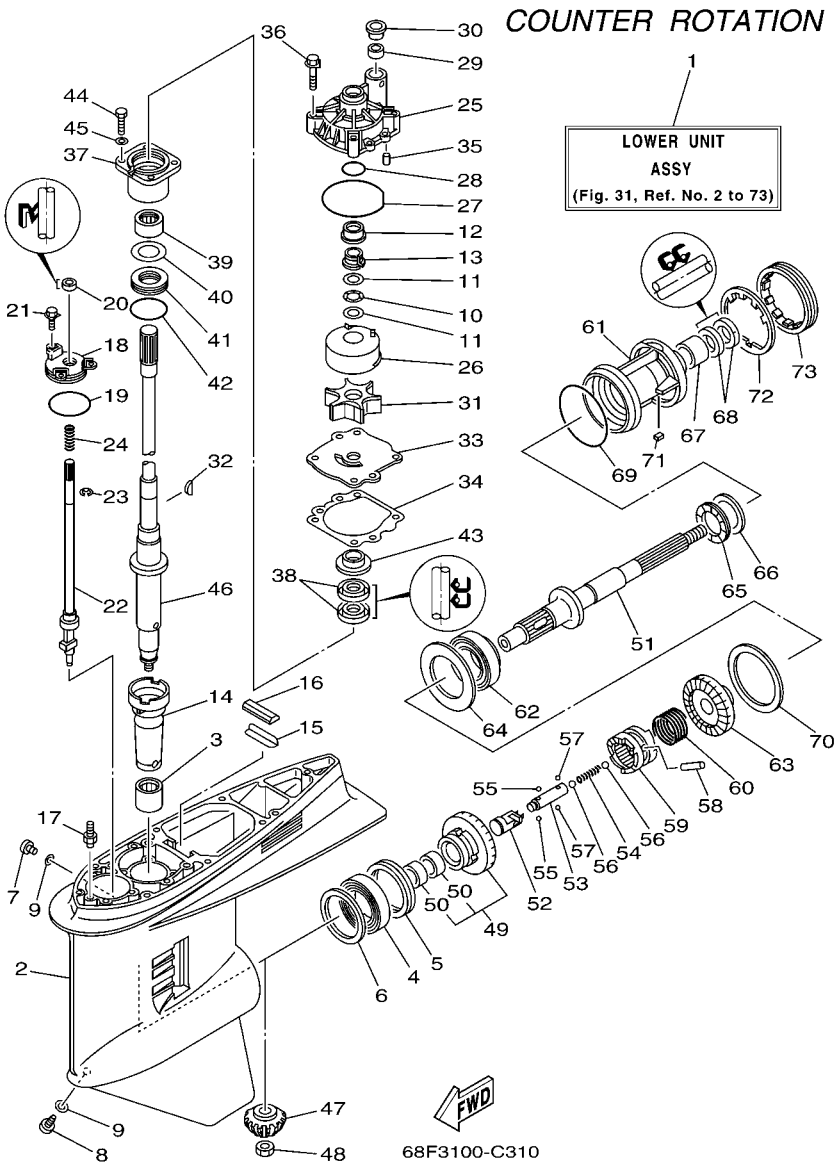

FIG. 31 LOWER CASING. DRIVE 3

REF. NO.	PART NO.	DESCRIPTION	68H3	68L3	68F3	68K3	68G3	REMARKS
66	6K1–45578–01–30	SHIM (T:0.30MM)				1	1	UR
	6K1–45578–01–40	SHIM (T:0.40MM)				1	1	UR
	6K1–45578–01–50	SHIM (T:0.50MM)				1	1	UR
67	93315–43061	BEARING				1	1	
68	93101–30M17	OIL SEAL				2	2	
69	93210–97M55	O-RING				1	1	
70	6G5–45577–02–10	SHIM (T:0.10MM)				1	1	UR
	6G5–45577–02–12	SHIM (T:0.12MM)				1	1	UR
	6G5–45577–02–15	SHIM (T:0.15MM)				1	1	UR
	6G5–45577–02–18	SHIM (T:0.18MM)				1	1	UR
	6G5–45577–02–30	SHIM (T:0.30MM)				1	1	UR
	6G5–45577–02–40	SHIM (T:0.40MM)				1	1	UR
	6G5–45577–02–50	SHIM (T:0.50MM)				1	1	UR
71	90282–04M00	KEY, STRAIGHT				1	1	
72	6G5–45383–01	WASHER, CLAW				1	1	
73	6G5–45384–00	NUT				1	1	

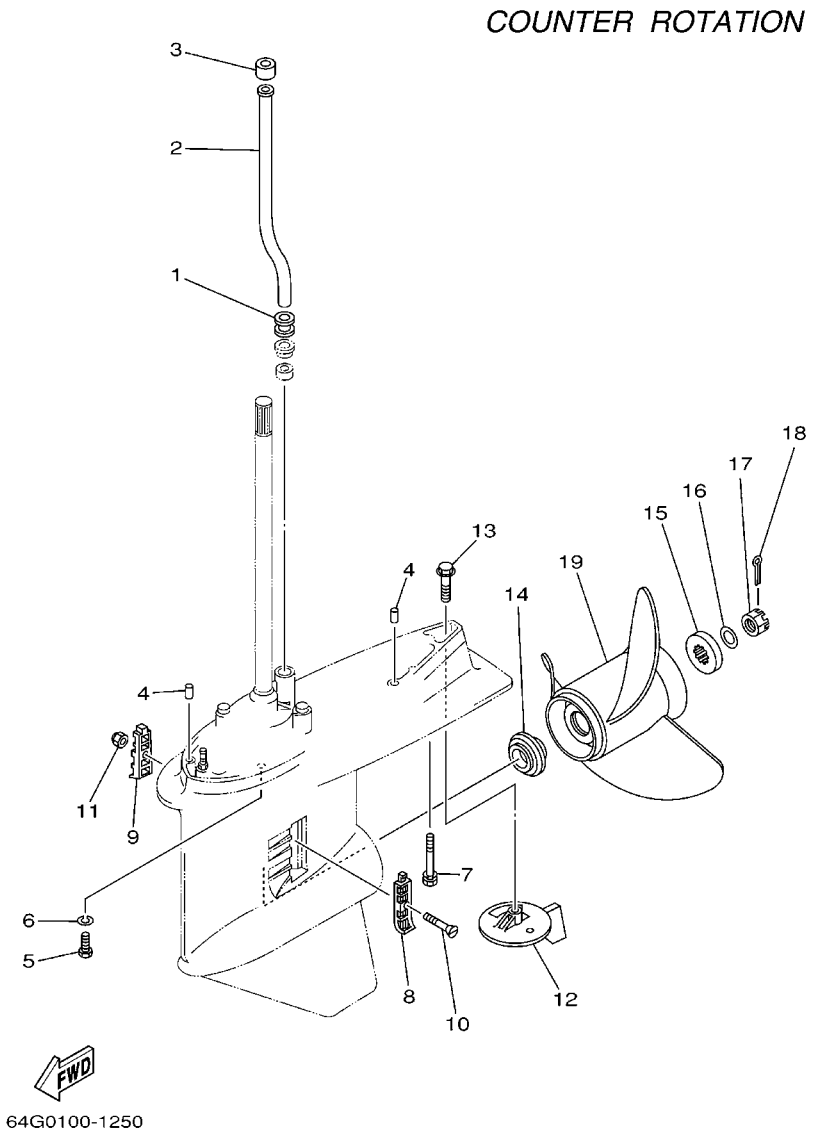

FIG. 32 LOWER CASING. DRIVE 4

REF. NO.	PART NO.	DESCRIPTION	68H3	68L3	68F3	68K3	68G3	REMARKS
1	6E5–44366–00	DAMPER, WATER SEAL				1	1	
2	6E5–44361–20	TUBE, WATER				1	1	X
3	6E5–44365–00	DAMPER, WATER SEAL				1	1	
4	93608–12M05	PIN, DOWEL				2	2	
5	97075–10045	BOLT				6	6	
6	92995–10100	WASHER				6	6	
7	90119–10M89	BOLT, WITH WASHER				1	1	
8	6J9–45214–00	COVER, WATER INLET				1	1	
9	6J9–45215–00	COVER, WATER INLET				1	1	
10	90152–05M08	SCREW, COUNTERSUNK				1	1	
11	90185–05002	NUT, SELF-LOCKING				1	1	
12	6K1–45371–02	TAB-TRIM				1	1	
13	90105–10M00	BOLT, FLANGE				1	1	
14	6E5–45987–01	SPACER				1	1	
15	688–45997–01	SPACER				1	1	
16	92990–18200	WASHER				1	1	
17	90171–18M04	NUT, CASTLE				1	1	
18	91490–40030	PIN, COTTER				1	1	
19	6K1–45970–01–98	PROPELLER (3X15-1/4"X15"-ML)				1	1	UR
	6K1–45972–01–98	PROPELLER (3X13-3/4"X21"-ML)				1	1	UR
	6K1–45974–02–98	PROPELLER (3X13-3/4"X19"-ML1)				1	1	UR
	6K1–45978–02–98	PROPELLER (3X13-3/4"X17"-ML1)				1	1	UR
	6R1–45970–A0	PROPELLER (3X15-1/4"X19"-ML)				1	1	UR
	6R1–45972–A0	PROPELLER (3X14-7/8"X21"-ML)				1	1	UR
	6R1–45974–A0	PROPELLER (3X14-1/2"X23"-ML)				1	1	UR
	6R1–45976–A0	PROPELLER (3X15-1/4"X15"-ML)				1	1	UR
	6R1–45978–A0	PROPELLER (3X15-1/4"X17"-ML)				1	1	UR

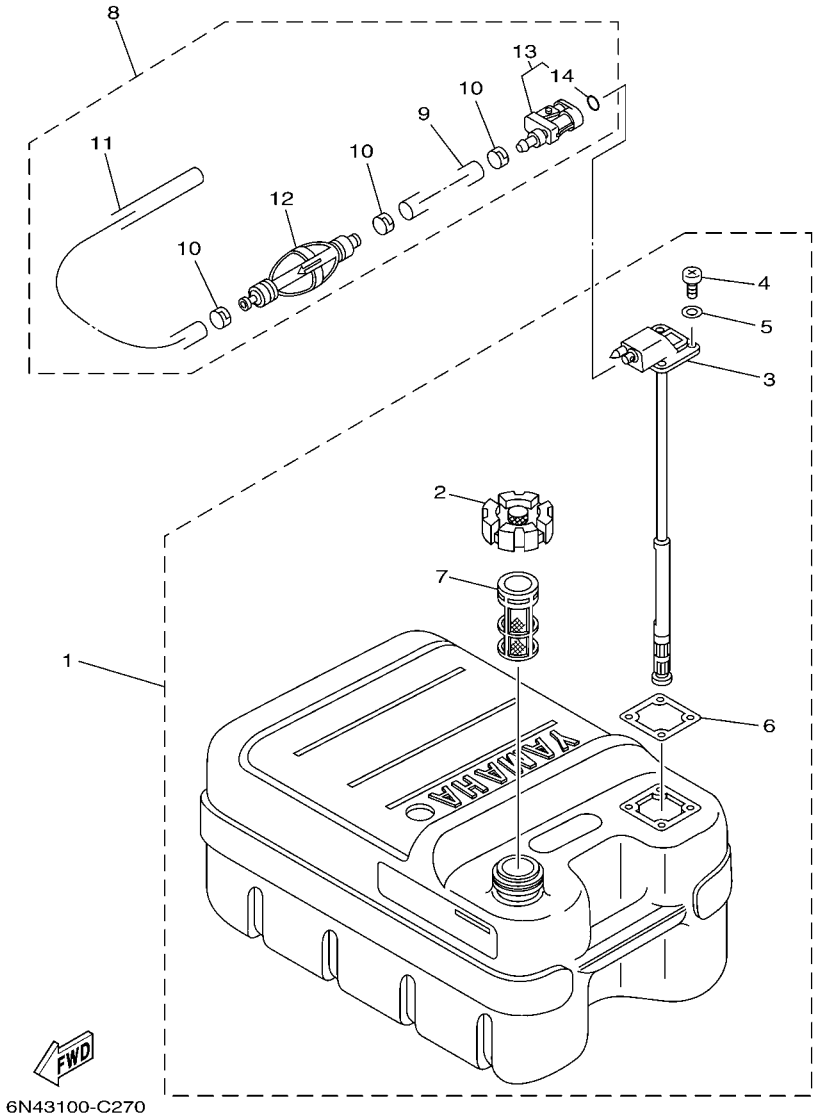

FIG. 33 FUEL TANK

REF. NO.	PART NO.	DESCRIPTION	68H3	68L3	68F3	68K3	68G3	REMARKS
1	6YJ–24201–10	FUEL TANK ASSY (24L)			1		1	AP FOR CAR
2	6YJ–24610–00	.CAP ASSY			1		1	
3	6Y1–24260–12	.FUEL METER ASSY			1		1	WITH INDICATOR
4	98586–05016	.SCREW, PAN HEAD			4		4	
5	6Y1–24329–00	.SEAL			4		4	
6	6Y1–24268–00	.GASKET, FUEL METER			1		1	
7	6YJ–24167–00	.STRAINER			1		1	
8	6Y2–24306–44	FUEL PIPE COMP. 1			1		1	AP FOR CAR
9	90445–13M01	.HOSE (L2050)			1		1	
10	6E5–24351–51	.BAND 1			3		3	
11	90445–13M35	.HOSE (L250)			1		1	
12	6Y2–24360–60	.PRIMER PUMP ASSY			1		1	
13	6Y2–24305–05	.FUEL PIPE JOINT COMP. 2			1		1	
14	93210–08287	..O-RING			1		1	

FIG. 34 STEERING GUIDE ATTACHMENT 1

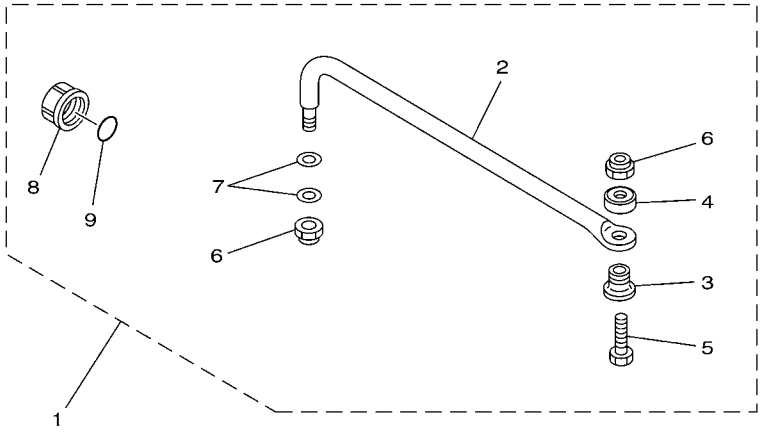

67H0100-9290

REF. NO.	PART NO.	DESCRIPTION	68H3	68L3	68F3	68K3	68G3	REMARKS
1	6E5–61350–02	STEERING GUIDE ATTACHMENT KIT	1	1	1	1	1	AP
2	6E5–61351–01	.ROD, STEERING LINK	1	1	1	1	1	
3	90387–10M61	.COLLAR	1	1	1	1	1	
4	90560–12M01	.SPACER	1	1	1	1	1	
5	6E5–61355–00	.BOLT	1	1	1	1	1	
6	90185–09M01	.NUT, SELF-LOCKING	2	2	2	2	2	
7	90201–10M20	.WASHER, PLATE	2	2	2	2	2	
8	6E5–43145–01	.CAP, CLAMP BRACKET	1	1	1	1	1	
9	93210–16275	.O-RING	1	1	1	1	1	

FIG. 35 STEERING GUIDE ATTACHMENT 2

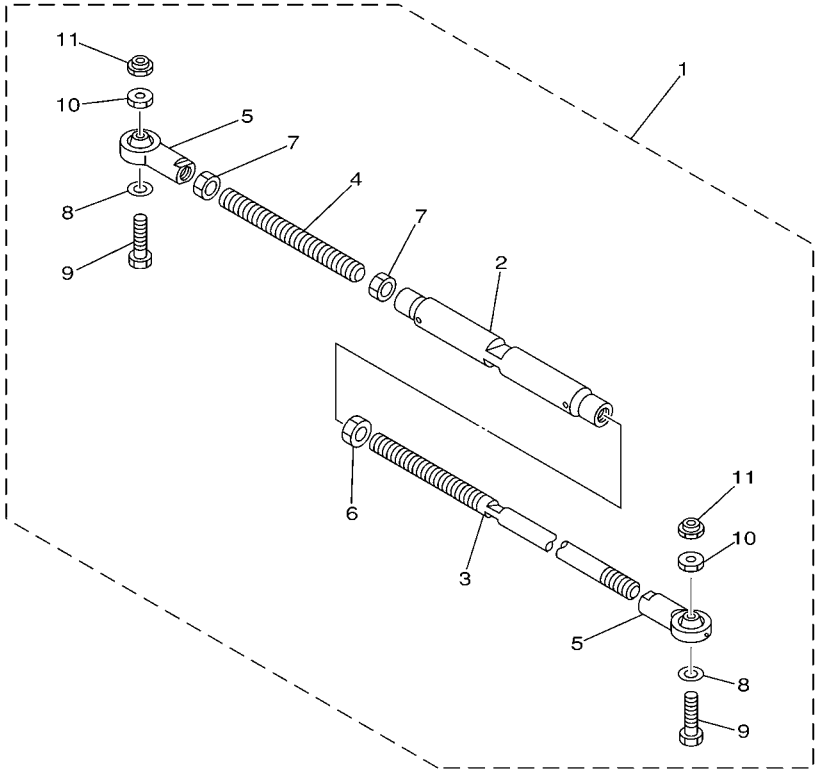

67H0100-0300

REF. NO.	PART NO.	DESCRIPTION	68H3	68L3	68F3	68K3	68G3	REMARKS
1	6E5–61301–01	TWIN KIT (L:600-800MM)				1	1	AP
2	6E5–61313–00	.ADJUSTER				1	1	
3	6E5–61311–11	.TIE BAR				1	1	
4	6E5–61315–00	.TIE BAR				1	1	
5	6E5–61303–00	.STEERING EYE COMP.				2	2	
6	90170–14M06	.NUT				1	1	
7	95380–14700	.NUT				2	2	
8	90201–10M76	.WASHER, PLATE				2	2	
9	90101–09M70	.BOLT				2	2	
10	90170–09M05	.NUT				2	2	
11	90185–09M01	.NUT, SELF-LOCKING				2	2	

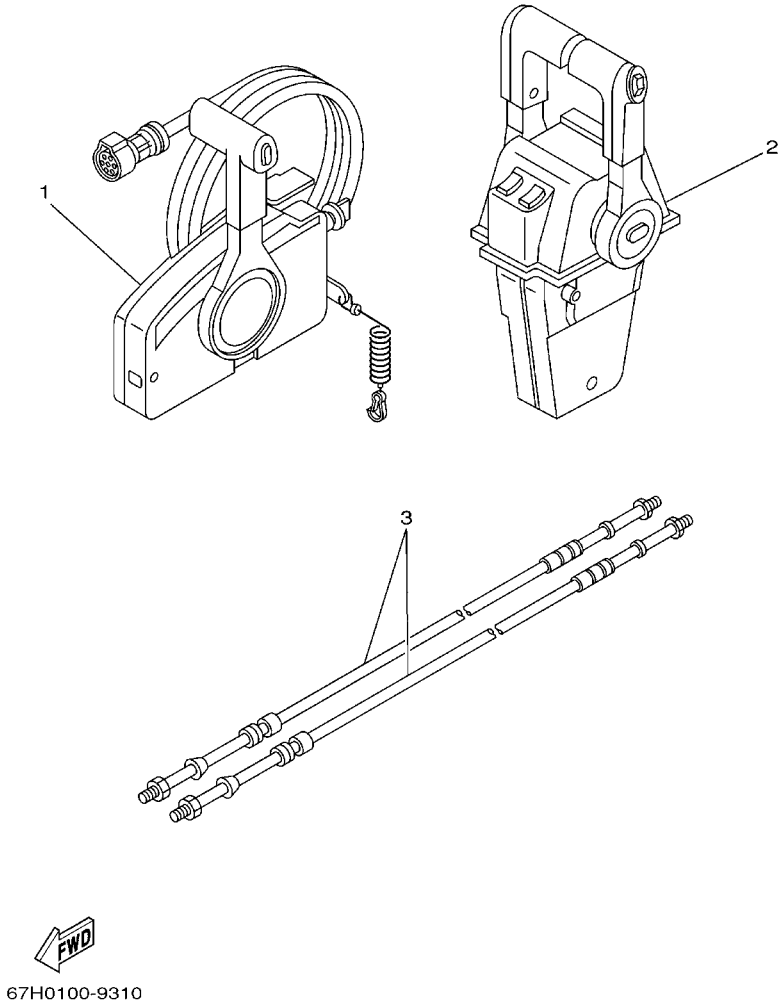

FIG. 36 REMOTE CONTROL BOX

REF. NO.	PART NO.	DESCRIPTION	68H3	68L3	68F3	68K3	68G3	REMARKS
1	703–48205–A4	REMOTE CONTROL ASSY			1			AP FOR CAR
	703–48205–17	REMOTE CONTROL ASSY	1	1	1			AP WITH PT/T SW.
2	704–48207–23	REMOTE CONTROL ASSY				1	1	AP WITH PT/T SW.
3	701–48320–50	CABLE, REMOTE CONTROL L=15F	2	2	2	2	2	UR
	701–48320–60	CABLE, REMOTE CONTROL L=16F	2	2	2	2	2	UR
	701–48320–80	CABLE, REMOTE CONTROL L=17F	2	2	2	2	2	UR
	701–48350–00	CABLE, REMOTE CONTROL L=21F	2	2	2	2	2	UR
	701–48350–20	CABLE, REMOTE CONTROL L=23F	2	2	2	2	2	UR

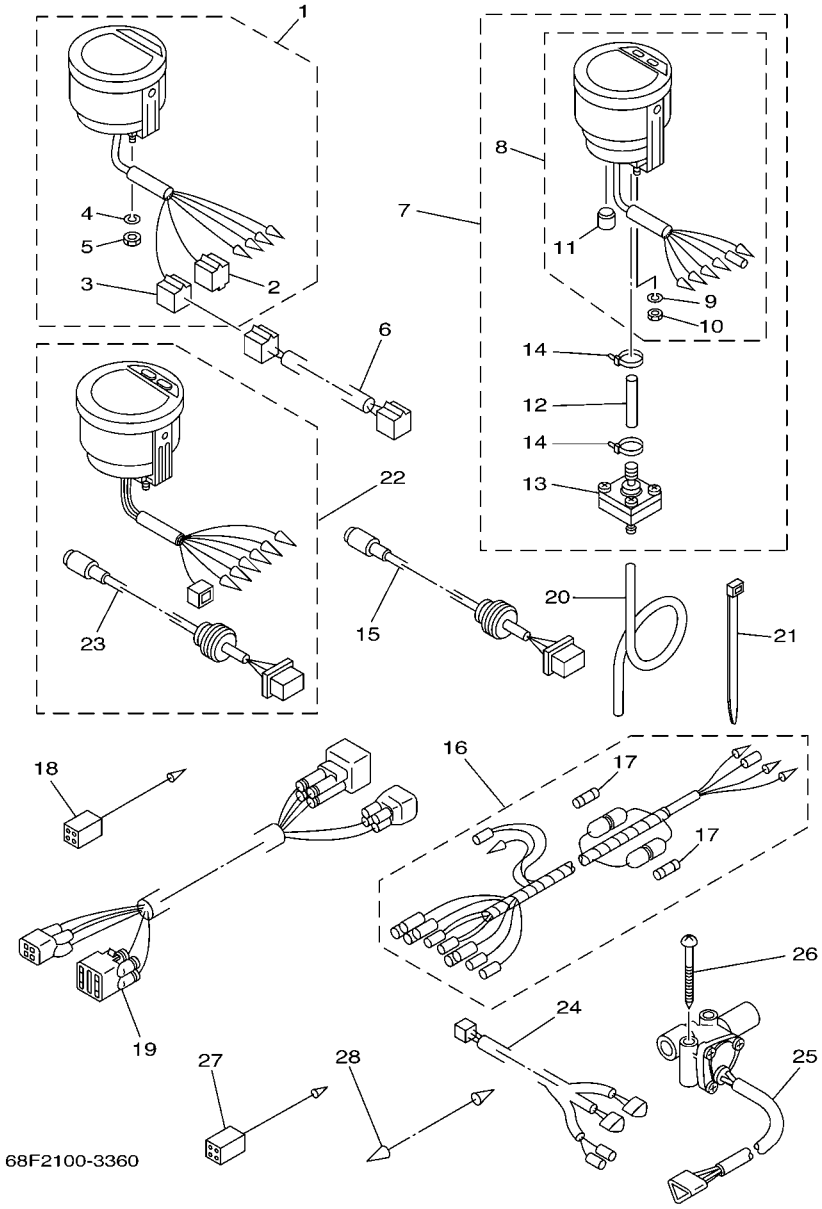

FIG. 37 METER

REF. NO.	PART NO.	DESCRIPTION	68H3	68L3	68F3	68K3	68G3	REMARKS
1	6Y5–8350T–03	TACHOMETER ASSY	1	1	1	1	1	AP
2	9E450–04433	.CONNECTOR	1	1	1	1	1	M-4-W
3	9E450–04533	.CONNECTOR	1	1	1	1	1	F-4-W
4	92990–04100	.WASHER, SPRING	2	2	2	2	2	
5	95380–04600	.NUT	2	2	2	2	2	
6	6Y5–83553–80	WIRE, LEAD	1	1	1	1	1	AP FOR USA,CAN
7	6Y5–83500–S5	DIGITAL SPEEDOMETER ASSY	1	1	1			AP
8	6Y5–83570–S5	.SPEEDOMETER ASSY	1	1	1			
9	92990–04100	..WASHER, SPRING	2	2	2			
10	95380–04600	..NUT	2	2	2			
11	6Y5–83533–T2	..GROMMET	1	1	1			
12	6Y5–83557–31	.TUBE	1	1	1			
13	6Y5–83728–00	.CONNECTOR ASSY	1	1	1			
14	90465–11M10	.CLAMP	2	2	2			
15	6Y5–87122–S0	CORD ASSY 1	1	1	1			AP
16	6Y5–83553–M0	WIRE, LEAD	1	1	1			AP
	6Y5–83553–00	WIRE, LEAD				1	1	AP
17	1E6–82151–00	.FUSE (10A)	2	2	2			FOR 6Y5-83553-M0
	1E6–82151–00	.FUSE (10A)				1	1	FOR 6Y5-83553-00
18	6Y5–82117–00	WIRE, LEAD (BLACK)	1	1	1			AP
19	68F–82553–80	EXTENSION, WIRE LEAD	1	1	1			AP
	68F–82553–90	EXTENSION, WIRE LEAD				1	1	AP
20	6Y5–83557–10	TUBE (8M)	1	1	1			
	6Y5–83557–00	TUBE (6M)			1			AP FOR CAR
21	90465–11M10	CLAMP	2	2	2			AP
22	6Y5–8350F–00	FUEL MANAGEMENT METER				1	1	AP EXCEPT FOR CAR
23	6Y5–87122–S0	.CORD ASSY 1				1	1	

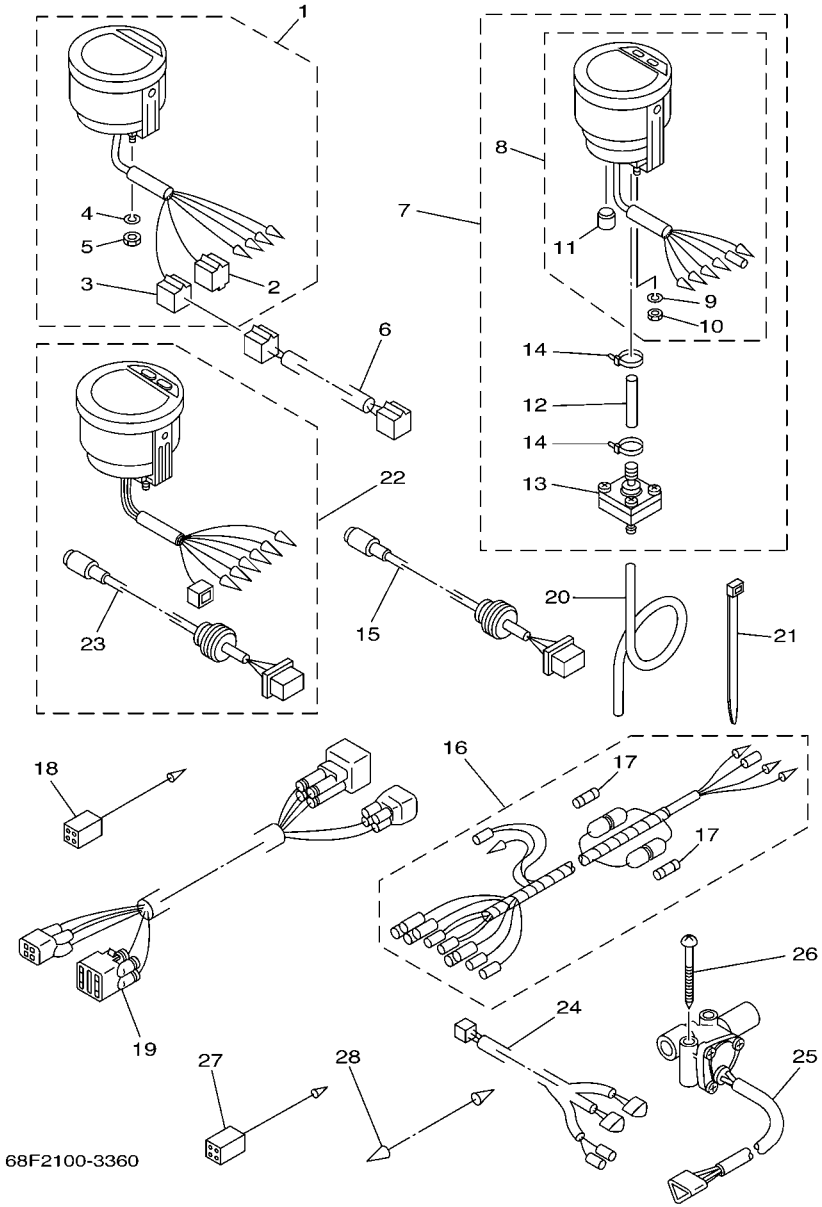

FIG. 37 METER

REF. NO.	PART NO.	DESCRIPTION	68H3	68L3	68F3	68K3	68G3	REMARKS
24	6Y5–83553–F1	WIRE, LEAD				1	1	AP EXCEPT FOR CAR
25	6Y5–85752–01	SENDER UNIT ASSY, FUEL METER				2	2	AP EXCEPT FOR CAR
26	90158–06002	SCREW, WOOD				4	4	AP EXCEPT FOR CAR
27	6Y5–82117–00	WIRE, LEAD (BLACK)				1	1	AP EXCEPT FOR CAR
28	703–82531–00	WIRE, LEAD				1	1	AP EXCEPT FOR CAR

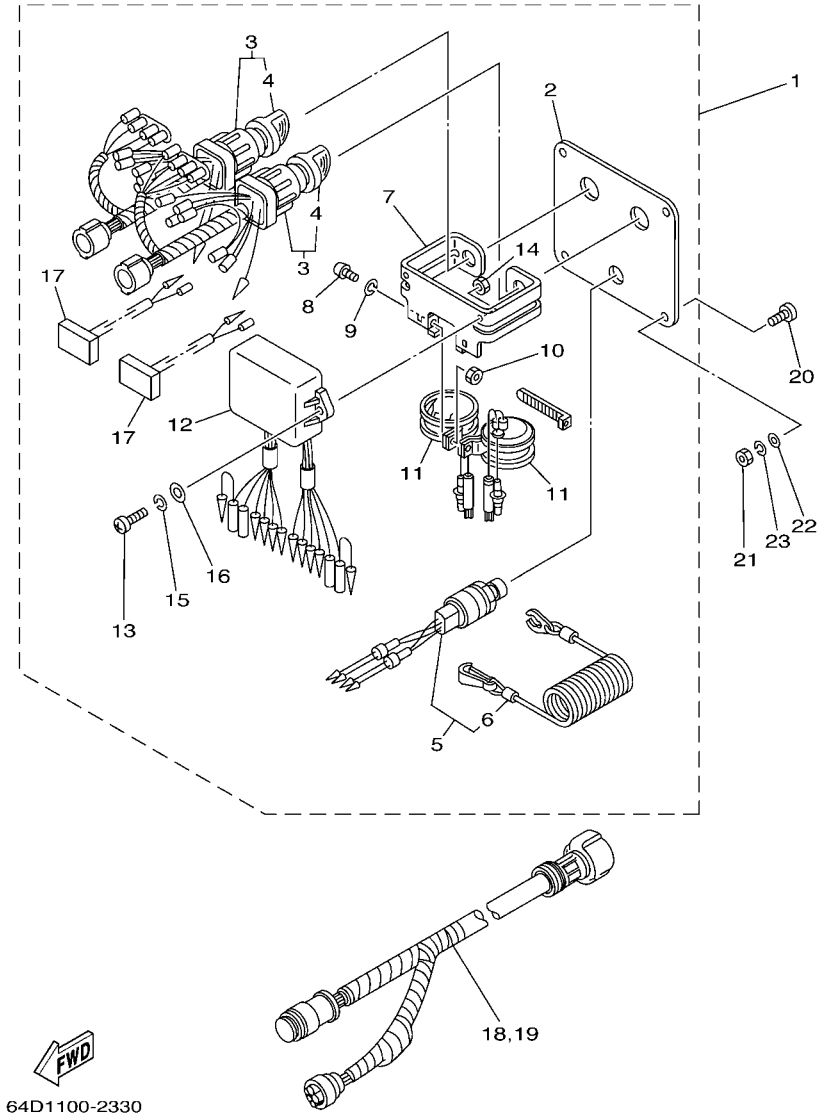

FIG. 38 SWITCH. PANEL 1

REF. NO.	PART NO.	DESCRIPTION	68H3	68L3	68F3	68K3	68G3	REMARKS
1	6K1–82570–07	PANEL SWITCH ASSY				1	1	AP EXCEPT FOR CAR
2	6K1–82571–01	.PANEL, SWITCH				1	1	
3	6K1–82510–06	.MAIN SWITCH ASSY				2	2	
4	703–82577–00	..CAP, KEY				1	1	
5	6K1–82575–00	.ENGINE STOP SWITCH ASSY				1	1	
6	682–82556–00	..STOPPER				1	1	
7	6K1–83614–01	.BRACKET				1	1	
8	98980–05010	.SCREW, BIND				2	2	
9	92990–05100	.WASHER, SPRING				2	2	
10	95380–05600	.NUT				2	2	
11	688–83383–11	.BUZZER				2	2	
12	6K1–85830–01	.CONTROL UNIT ASSY				1	1	
13	98980–06020	.SCREW, BIND				2	2	
14	95380–06600	.NUT, HEXAGON				2	2	
15	92990–06100	.WASHER, SPRING				2	2	
16	92990–06600	.WASHER, PLATE				2	2	
17	6K1–81980–00	.DIODE ASSY				2	2	
18	6K1–8258A–40	EXTENSION, WIRE HARNESS				1	1	AP EXCEPT FOR CAR
19	61B–8258A–01	EXTENSION, WIRE HARNESS				1	1	AP EXCEPT FOR CAR
20	90149–05M05	SCREW				4	4	AP EXCEPT FOR CAR
21	95380–05600	NUT				4	4	AP EXCEPT FOR CAR
22	92990–05600	WASHER, PLATE				4	4	AP EXCEPT FOR CAR
23	92990–05100	WASHER, SPRING				4	4	AP EXCEPT FOR CAR

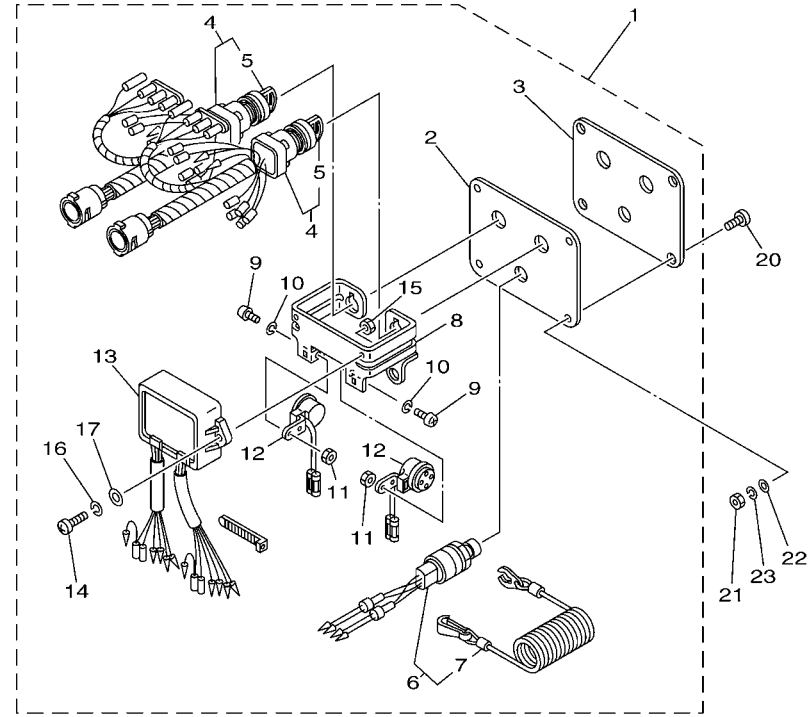

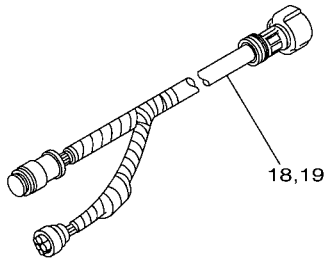

67H1100-2360

FIG. 39 SWITCH. PANEL 2

REF. NO.	PART NO.	DESCRIPTION	68H3	68L3	68F3	68K3	68G3	REMARKS
1	61B–82570–02	PANEL SWITCH ASSY					1	AP FOR CAR
2	61B–82588–01	.PLATE					1	
3	61B–82551–01	.STOP SWITCH ASSY					1	
4	61B–82510–01	.MAIN SWITCH ASSY					2	
5	676–82577–00	..CAP, KEY					1	
6	6K1–82575–00	.ENGINE STOP SWITCH ASSY					1	
7	682–82556–00	..STOPPER					1	
8	6K1–83614–01	.BRACKET					1	
9	98980–05010	.SCREW, BIND					2	
10	92990–05100	.WASHER, SPRING					2	
11	95380–05600	.NUT					2	
12	6R5–83383–00	.BUZZER					2	
13	61B–85830–00	.CONTROL UNIT ASSY					1	
14	98980–06020	.SCREW, BIND					2	
15	95380–06600	.NUT, HEXAGON					2	
16	92990–06100	.WASHER, SPRING					2	
17	92990–06600	.WASHER, PLATE					2	
18	6K1–8258A–40	EXTENSION, WIRE HARNESS					1	AP FOR CAR
19	61B–8258A–01	EXTENSION, WIRE HARNESS					1	AP FOR CAR
20	90149–05M05	SCREW					4	AP FOR CAR
21	95380–05600	NUT					4	AP FOR CAR
22	92990–05600	WASHER, PLATE					4	AP FOR CAR
23	92990–05100	WASHER, SPRING					4	AP FOR CAR

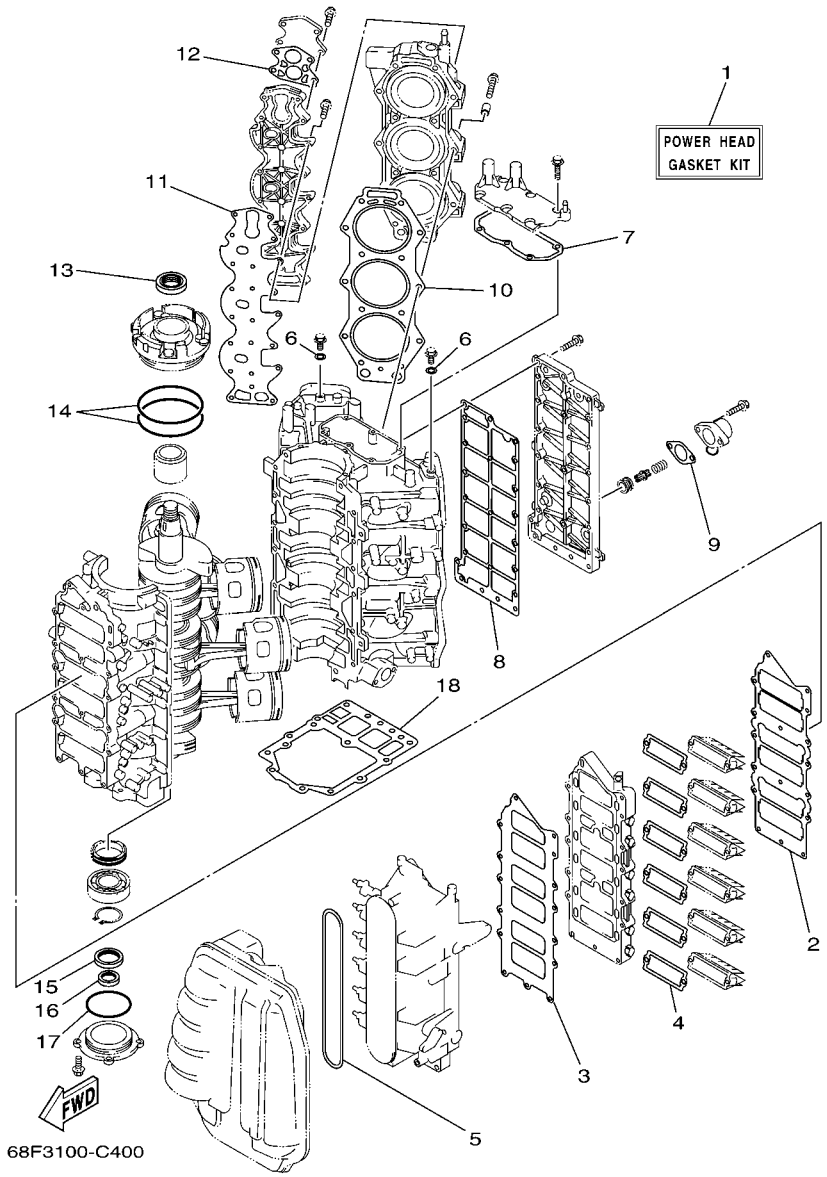

FIG. 40 REPAIR KIT 1

REF. NO.	PART NO.	DESCRIPTION	68H3	68L3	68F3	68K3	68G3	REMARKS
1	68F–W0001–01	POWER HEAD GASKET KIT	1	1	1	1	1	
2	65L–13645–00	.GASKET, MANIFOLD 1	1	1	1	1	1	
3	65L–13646–00	.GASKET, MANIFOLD 2	1	1	1	1	1	
4	61A–13621–A0	.GASKET, VALVE SEAT	6	6	6	6	6	
5	60V–14476–00	.SEAL	1	1	1	1	1	
6	90430–14115	.GASKET	2	2	2	2	2	
7	68F–11381–00	.GASKET 1	1	1	1	1	1	
8	68F–41114–00	.GASKET, EXHAUST OUTER COVER	1	1	1	1	1	
9	6G5–11382–A1	.GASKET 2	1	1	1	1	1	
10	68F–11181–00	.GASKET, CYLINDER HEAD 1	2	2	2	2	2	
11	68F–11193–01	.GASKET, HEAD COVER 1	2	2	2	2	2	
12	688–12414–A1	.GASKET, COVER	2	2	2	2	2	
13	93102–40M14	.OIL SEAL	1	1	1	1	1	
14	93211–04001	.O-RING	2	2	2	2	2	
15	93102–35M61	.OIL SEAL	1	1	1	1	1	
16	93101–22M15	.OIL SEAL	1	1	1	1	1	
17	93210–74M35	.O-RING	1	1	1	1	1	
18	68F–45113–00	.GASKET, UPPER CASING	1	1	1	1	1	

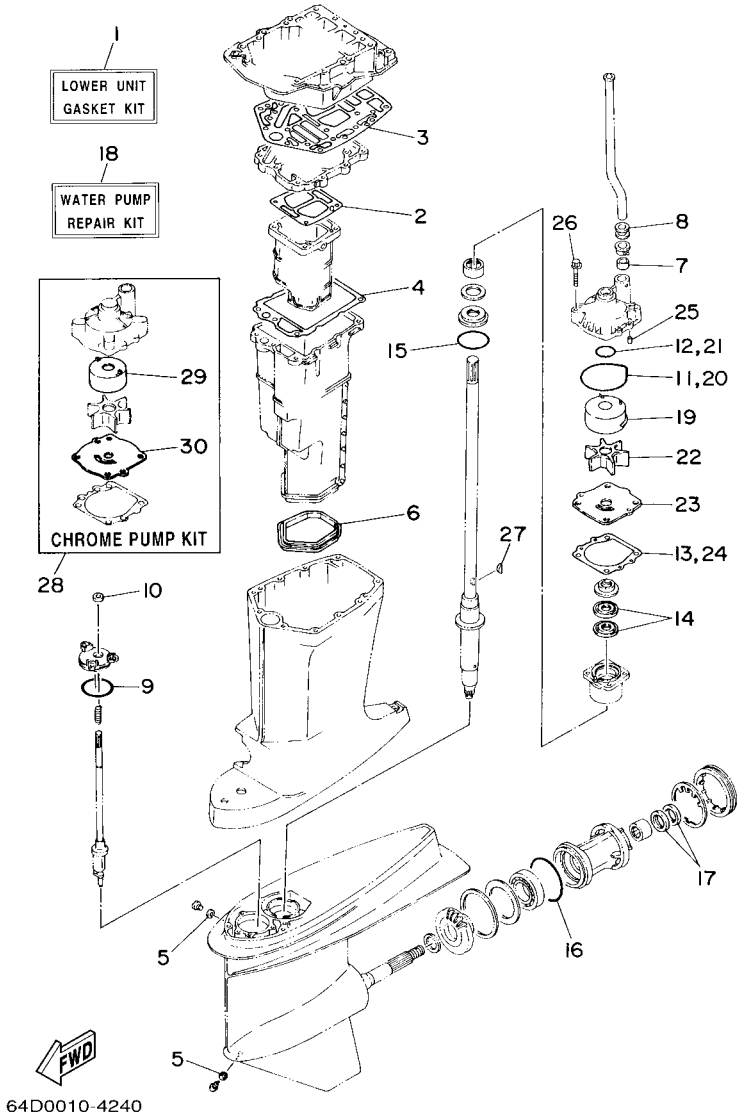

FIG. 41 REPAIR KIT 2

REF. NO.	PART NO.	DESCRIPTION	68H3	68L3	68F3	68K3	68G3	REMARKS
1	6G5–W0001–C1	LOWER UNIT GASKET KIT	1	1	1	1	1	
2	6G5–41134–A1	.GASKET, EXHAUST MANIFOLD	1	1	1	1	1	
3	6G5–45114–A1	.GASKET, UPPER CASING	1	1	1	1	1	
4	6E5–41135–A0	.GASKET, EXHAUST MANIFOLD	1	1	1	1	1	
5	90430–08020	.GASKET	2	2	2	2	2	
6	6E5–45123–00	.GASKET, MUFFLER	1	1	1	1	1	
7	6E5–44365–00	.DAMPER, WATER SEAL	1	1	1	1	1	
8	6E5–44366–00	.DAMPER, WATER SEAL	1	1	1	1	1	
9	93210–58144	.O-RING	1	1	1	1	1	
10	93106–09014	.OIL SEAL	1	1	1	1	1	
11	93210–86M38	.O-RING	1	1	1	1	1	
12	93210–37160	.O-RING	1	1	1	1	1	
13	6E5–44315–A0	.GASKET, WATER PUMP	1	1	1	1	1	
14	93101–28M16	.OIL SEAL	2	2	2	2	2	
15	93210–55M14	.O-RING	1	1	1	1	1	
16	93210–97M55	.O-RING	1	1	1	1	1	
17	93101–30M17	.OIL SEAL	2	2	2	2	2	
18	61A–W0078–A3	WATER PUMP REPAIR KIT	1	1	1	1	1	
19	61A–44322–02	.INSERT, CARTRIDGE	1	1	1	1	1	
20	93210–86M38	.O-RING	1	1	1	1	1	
21	93210–37160	.O-RING	1	1	1	1	1	
22	6E5–44352–01	.IMPELLER	1	1	1	1	1	
23	6G5–44323–00	.OUTER PLATE, CARTRIDGE	1	1	1	1	1	
24	6E5–44315–A0	.GASKET, WATER PUMP	1	1	1	1	1	
25	93606–12019	.PIN, DOWEL	2	2	2	2	2	
26	90119–08M14	.BOLT, WITH WASHER	4	4	4	4	4	
27	90280–04M05	.KEY, WOODRUFF	1	1	1	1	1	

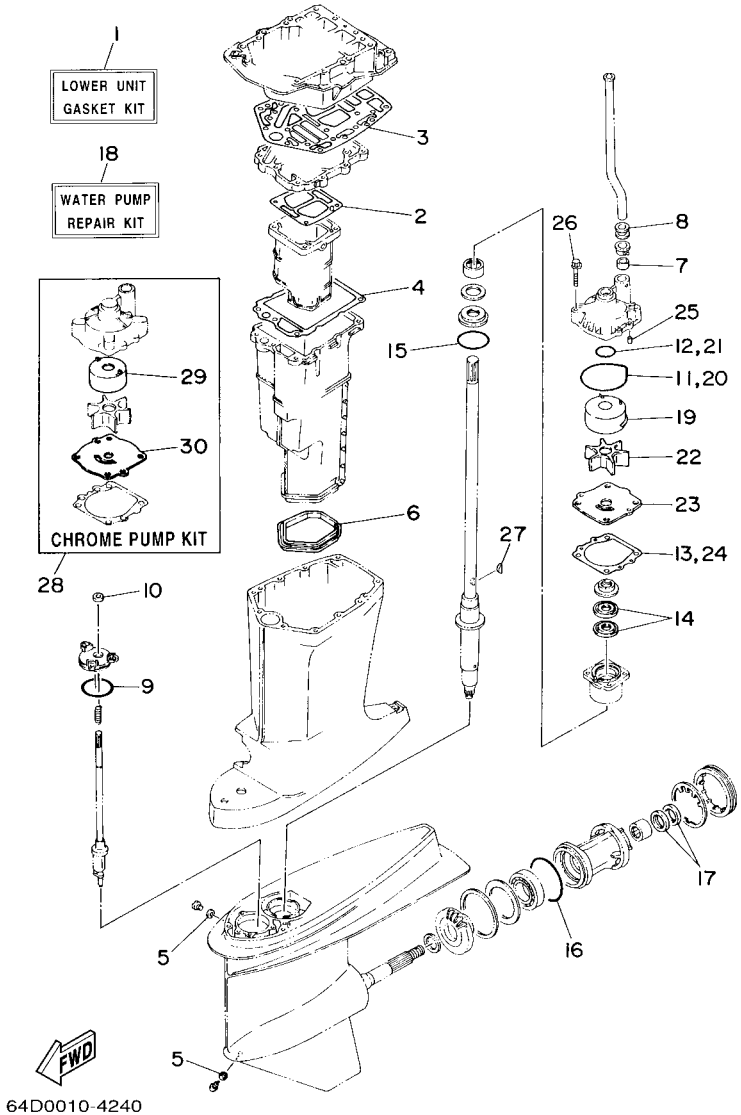

FIG. 41 REPAIR KIT 2

REF. NO.	PART NO.	DESCRIPTION	68H3	68L3	68F3	68K3	68G3	REMARKS
28	61A–W0078–2A	CHROME PUMP KIT	1	1	1	1	1	
29	6R3–44322–42	.INSERT, CARTRIDGE	1	1	1	1	1	
30	6G5–44323–40	.OUTER PLATE, CARTRIDGE	1	1	1	1	1	

PART NO.	REF. NO.
68F–11111–00–94	5 – 1
68F–11119–00	5 – 9
68F–11121–00–94	5 – 4
68F–11181–00	5 – 7
	40 – 10
68F–11191–00–1S	5 – 11
68F–11192–00–1S	5 – 12
68F–11193–01	5 – 13
	40 – 11
65L–1131N–00	19 – 62
62Y–11325–00	5 – 20
6E5–11325–00	3 – 18
	5 – 2
66M–11327–00–94	5 – 22
66M–11328–00	5 – 21
68F–11353–00	19 – 64
65L–11354–00	19 – 61
646–11370–01	3 – 11
650–11370–01	3 – 6
	11 – 9
68F–11371–00–1S	3 – 20
6H1–11372–00	28 – 19
6G5–11372–00–1S	5 – 37
68F–11372–01	3 – 5
6E5–11372–01	3 – 3
6F6–11372–01	11 – 7
68F–11381–00	3 – 21
	40 – 7
6G5–11382–A1	5 – 36
	40 – 9
65L–11395–00	19 – 57
65L–11396–00	19 – 63
68F–11411–01	4 – 1
6E5–11447–00	4 – 2
663–11518–01	3 – 10
6R3–11536–00	4 – 9
68F–11536–00–94	6 – 13
6R3–11537–00	12 – 19
68F–11537–00–94	6 – 18
60V–11557–00	6 – 15
68F–11579–01–94	6 – 11
68F–11590–00	6 – 4
68F–11595–10	6 – 8
68F–11598–00–94	6 – 1
68F–11603–01	4 – 18
68F–11604–01	4 – 18
68F–11605–01	4 – 18
68F–11631–01–85	4 – 17

PART NO.	REF. NO.
6R5–11633–10	4 – 21
6R5–11634–10	4 – 22
68F–11635–01	4 – 17
68F–11636–01	4 – 17
68F–11642–01–85	4 – 19
68F–11645–01	4 – 19
68F–11646–01	4 – 19
68L–11650–00	4 – 23
6R5–11650–10	4 – 23
68F–12170–10	9 – 1
68F–12171–00	9 – 8
68F–12173–00	9 – 4
68F–12223–00	9 – 6
68F–12228–00	9 – 9
6E5–12411–30	5 – 16
688–12413–00–1S	5 – 17
688–12414–A1	5 – 18
	40 – 12
6G5–12416–00	5 – 33
68F–12424–10	9 – 2
68F–12439–00	9 – 7
66M–12535–00	5 – 23
6R3–12572–00	22 – 54
68F–12576–00	5 – 39
68F–12577–00	22 – 48
68F–12577–10	22 – 48
6R3–12580–00	22 – 56
6G5–12581–00	28 – 11
68F–12582–01	22 – 49
68F–12582–10	22 – 49
68F–13100–00	12 – 32
6R3–13117–00	12 – 20
68F–13133–00	12 – 37
68F–13161–10	10 – 6
68F–1316A–00	12 – 39
68F–1316F–00	12 – 36
68F–1316G–00	12 – 38
68F–13171–10	10 – 7
6R3–13183–00	12 – 15
68F–13184–00	12 – 34
68F–1319K–10	12 – 42
68F–13200–00	12 – 1
68H–13200–00	12 – 1
68L–13200–00	12 – 1
6E5–13411–00	13 – 5
6E5–13414–00	13 – 6
68F–13416–00	12 – 40
6G5–13416–00	12 – 6

PART NO.	REF. NO.
68F–13418–00	12 – 33
68F–13434–00	1 – 23
	2 – 29
6E5–13437–43	13 – 43
6E5–13437–62	13 – 43
68F–13440–00	12 – 35
67F–13448–00	1 – 22
	2 – 28
6E5–13448–00	13 – 2
68F–13455–00	9 – 10
6R3–13471–00	12 – 2
60V–13473–00	9 – 33
68F–13473–00	9 – 11
6L2–13475–00	12 – 3
66K–13532–00	7 – 53
66K–13533–00	7 – 55
66K–13542–00	7 – 51
66K–13544–00	7 – 52
68F–13552–00	3 – 7
68F–13568–00	8 – 9
68H–13610–00	11 – 1
65L–13610–01	11 – 1
61A–13621–A0	11 – 3
	40 – 4
68F–13624–00–1S	11 – 6
65L–13645–00	11 – 12
	40 – 2
65L–13646–00	11 – 11
	40 – 3
68F–13716–00	10 – 18
68F–13751–00	8 – 1
68F–13758–10	9 – 31
68F–13761–00	10 – 11
68F–13764–00	10 – 17
68F–13767–00	10 – 1
68F–13781–00	7 – 26
60V–13782–00	10 – 3
68F–13784–00	7 – 1
68F–13815–10	9 – 26
68F–13816–10	9 – 28
68F–13843–00	7 – 35
68F–13844–00	7 – 27
60V–13854–00	9 – 16
65L–13898–00	7 – 56
60V–13898–10	10 – 8
65L–13905–00	7 – 15
68F–13906–00	7 – 11
68F–13907–01	7 – 24

PART NO.	REF. NO.
68F–13910–10	9 – 17
68F–13915–00	7 – 28
68F–13971–00	7 – 16
68F–13972–10	9 – 38
68F–13973–10	10 – 13
68F–13974–10	10 – 15
68F–13993–10	9 – 13
60V–14005–00	9 – 18
68F–1410B–00	10 – 12
65L–14125–00	7 – 10
60V–14126–00	9 – 19
65L–14147–00	7 – 36
65L–14159–00	7 – 25
66K–14163–00	7 – 14
65L–1416A–00	7 – 29
68F–14182–01	7 – 5
65L–14227–00	7 – 23
66K–14239–00	7 – 12
66K–14245–00	7 – 21
66K–14271–00	7 – 30
68F–14271–00	7 – 40
68F–14274–00	7 – 37
6A0–14325–00	14 – 38
66K–14325–01	7 – 13
65L–14334–00	8 – 4
65L–14397–00	7 – 41
60V–14440–00	11 – 17
60V–14476–00	11 – 18
	40 – 5
624–14485–00	3 – 4
68F–14485–00	12 – 41
68F–14488–00	16 – 20
65L–14523–00	8 – 5
65L–14527–00	8 – 2
65L–14546–00	7 – 6
66K–14548–01	7 – 8
65L–14565–00	7 – 57
	8 – 3
	9 – 14
65L–14573–00	8 – 17
65L–14578–00	8 – 8
65L–14579–00	8 – 18
6K5–14592–00	8 – 6
65L–14596–00	8 – 15
6E5–14711–01–5B	28 – 28
64D–14721–20–5B	28 – 37
6E5–14737–00	28 – 29
65L–14966–00	7 – 18

PART NO.	REF. NO.
66K–14980–00	7 – 4
66K–14984–00	7 – 9
66K–14985–00	7 – 7
65L–14992–00	7 – 42
65L–14997–00	7 – 43
68F–15100–00–1S	3 – 2
68H–15100–00–1S	3 – 2
68L–15100–00–1S	3 – 2
68F–15163–00–94	4 – 3
6G5–15359–00–94	4 – 12
6E5–21708–10	13 – 20
61A–21708–20	13 – 20
6E5–21733–20	13 – 21
6E5–21734–01–33	13 – 37
6E5–21746–00	13 – 39
68F–2174E–00	13 – 12
68F–21750–00	13 – 1
6E5–21770–03	13 – 22
6E5–21798–01–33	13 – 38
68F–2415E–40	22 – 59
68F–2415E–60	22 – 59
6YJ–24167–00	33 – 7
65L–24169–00	7 – 49
60V–24176–00	9 – 25
60V–24178–00	9 – 24
6YJ–24201–10	33 – 1
68F–24216–00	7 – 2
68F–24251–00	7 – 20
646–24251–02	13 – 25
6Y1–24260–12	33 – 3
6Y1–24268–00	33 – 6
68F–24300–00	9 – 20
6Y2–24305–05	33 – 13
6Y2–24306–44	33 – 8
6YK–24307–42	15 – 1
6Y2–24307–50	15 – 3
67H–24311–00	14 – 27
68F–24311–00	14 – 23
68F–24312–10	9 – 34
61A–24313–00	14 – 1
6E5–24313–00	14 – 44
6N7–24313–00	14 – 3
68F–24313–10	9 – 36
61U–24316–00	14 – 43
6E5–24319–01	13 – 26
6E5–24321–01	13 – 30
6E5–24322–00	13 – 23
6E5–24323–00	13 – 13

PART NO.	REF. NO.
68F–24329–00	9 – 30
6Y1–24329–00	33 – 5
6E5–24351–51	15 – 5
	33 – 10
68F–24356–00	9 – 35
6Y2–24360–60	15 – 7
	33 – 12
65L–24375–00	7 – 44
66K–24376–00	7 – 38
6R3–24377–00	14 – 4
6R3–24377–10	14 – 52
650–24378–00	5 – 29
6E5–24378–00	14 – 25
6E5–24379–00	13 – 15
65L–24387–00	7 – 17
	9 – 39
65L–24397–00	7 – 45
6E5–24410–03	14 – 28
6E5–24411–00	14 – 33
6E5–24412–10	14 – 40
6E5–24413–00	14 – 30
6A0–24421–01	14 – 37
6E5–24423–00	14 – 35
648–24424–00	14 – 34
650–24431–A0	14 – 41
6E5–24434–02	14 – 36
6E5–24435–00	14 – 32
6E5–24444–00	14 – 29
65L–24461–00	7 – 54
68F–24469–00	14 – 9
6E5–24471–00	14 – 31
68F–24473–00	7 – 3
65L–24486–00	7 – 19
68F–24486–00	9 – 29
66K–24489–00	7 – 39
68F–24519–00	14 – 8
65L–24531–01	14 – 10
68F–24551–00	10 – 9
60H–24558–00	14 – 15
68F–24560–00	14 – 6
68F–24562–00	14 – 7
68F–24563–00	14 – 12
61A–24564–00	14 – 11
65L–24564–00	14 – 13
68F–24566–00	14 – 18
68F–24567–00	14 – 14
65L–24576–00	7 – 46
68F–24576–00	10 – 10

PART NO.	REF. NO.
66K–24579–00	7 – 47
68F–24579–00	9 – 15
65L–24592–00	7 – 48
6YJ–24610–00	33 – 2
68F–2466A–10	9 – 27
	10 – 14
68F–28100–00	13 – 45
67F–2812A–00	19 – 40
6A1–28176–00	22 – 61
61H–2819R–31	13 – 44
68F–41113–10–1S	5 – 28
68F–41114–00	5 – 27
	40 – 8
6G5–41131–01–5B	28 – 20
64D–41132–00–5B	28 – 24
6G5–41134–A1	28 – 25
	41 – 2
6E5–41135–A0	28 – 32
	41 – 4
6G5–41137–11–94	28 – 9
68F–41213–00	23 – 37
65L–41217–00	8 – 19
61A–41237–00	23 – 34
682–41237–00	23 – 36
6H1–41237–00	12 – 24
6R5–41237–00	12 – 26
67H–41241–00	12 – 23
67H–41632–00	23 – 27
68F–42510–A0–8D	25 – 10
68F–42510–B0–8D	25 – 10
624–42542–00	17 – 16
	19 – 4
68F–42610–51–8D	1 – 1
68H–42610–51–8D	1 – 1
68L–42610–51–8D	1 – 1
60F–42610–N1–NA	2 – 1
68J–42610–N1–NA	2 – 1
68M–42610–N1–NA	2 – 1
68J–42613–00–3P	2 – 12
68F–42613–00–8D	1 – 12
68F–42615–00	22 – 18
68F–42619–00	1 – 11
	2 – 11
68J–42636–00–3P	2 – 16
68F–42647–01–94	1 – 2
	2 – 2
68F–42648–01–94	1 – 3
	2 – 3

PART NO.	REF. NO.
60V–42651–01	1 – 7
	2 – 7
60V–42652–00	1 – 8
	2 – 8
68F–42662–00	1 – 14
	2 – 20
68J–42662–00	2 – 17
68F–42663–00	1 – 6
	2 – 6
68F–42677–50	1 – 15
68H–42677–50	1 – 15
68L–42677–50	1 – 15
68F–42677–60	1 – 21
68J–42677–N0	2 – 21
68F–42678–50	1 – 20
68H–42678–50	1 – 20
68L–42678–50	1 – 20
60F–42678–N0	2 – 26
68J–42678–N0	2 – 26
68M–42678–N0	2 – 26
68J–4267A–N0	2 – 27
68F–42681–50	1 – 18
68J–42681–N0	2 – 23
68F–42682–50	1 – 19
68J–42682–N0	2 – 24
68J–42683–N0	2 – 25
68F–42687–10	1 – 16
68F–42710–10–8D	22 – 1
648–42715–00	23 – 20
6E5–42716–10	22 – 53
61A–42717–00	22 – 45
68F–42718–00	22 – 50
68F–42721–00	22 – 34
68F–42722–00	22 – 47
68F–42723–00–94	22 – 33
68F–42723–10–8D	18 – 27
6E5–42724–00	28 – 10
68F–42725–01	22 – 20
688–42726–10	22 – 30
61A–42727–00	22 – 2
64G–42727–00	22 – 2
68F–42738–00–5B	22 – 21
64D–42738–10–5B	22 – 23
68F–42741–00–4D	22 – 37
68F–42741–10–4D	22 – 37
68F–42744–00	23 – 42
68F–42753–00	22 – 51
6E5–42761–00–1S	3 – 23

PART NO.	REF. NO.
6E5–42762–00–1S	3 – 24
68F–42769–00	22 – 36
68F–42771–00	22 – 44
68F–42791–01	22 – 60
68H–42791–01	22 – 60
6R3–42791–41	28 – 2
6R3–42792–41	28 – 3
68F–42815–00–8D	22 – 6
68F–42816–00–8D	22 – 7
68F–42817–00–8D	22 – 8
67F–42818–00	22 – 10
68F–42818–00	22 – 9
68F–42828–00–94	22 – 3
68F–42828–10–94	22 – 4
64E–43111–02–8D	24 – 1
64E–43112–02–8D	24 – 9
64E–43126–00	24 – 37
64E–43131–01	24 – 15
64E–43139–02	25 – 1
64D–43144–00	22 – 15
6G5–43144–00	24 – 27
6E5–43145–01	34 – 8
6G5–43148–00	24 – 32
6G5–43181–02	24 – 29
6G5–43185–02	24 – 30
64E–43311–10–8D	24 – 22
64E–43311–20–8D	24 – 22
61A–43376–00	25 – 8
68F–43800–01–4D	26 – 1
64E–43802–00	27 – 8
64E–43805–00	27 – 37
64E–4380F–00	27 – 33
64E–4380J–00	27 – 30
64E–43810–00	26 – 6
6E5–43814–02	26 – 13
64E–43816–00	27 – 17
64E–43817–00	26 – 5
64E–43817–10	27 – 19
64E–43818–01	26 – 32
64E–4381G–00	26 – 27
64E–43820–00	26 – 15
64E–43821–00	26 – 16
64E–43822–00	26 – 17
64E–43825–01	26 – 2
64E–43827–00	27 – 22
64E–43828–00	26 – 22
64E–43829–00	26 – 23
64E–4382G–00	26 – 29

PART NO.	REF. NO.
64E–43830–00	27 – 4
64E–43831–00	27 – 2
64E–43841–00	27 – 7
64E–43843–00	27 – 6
64E–43843–10	27 – 38
64E–4384J–00	26 – 18
64E–43850–00	27 – 15
64E–43851–00	27 – 11
64E–43855–00	27 – 14
64E–43858–00	27 – 12
6E5–43858–00	26 – 28
72X–43858–00	27 – 5
64E–43859–00	27 – 13
64E–43860–00	27 – 20
6E5–43862–00	26 – 10
6G5–43863–00	27 – 10
6E5–43864–00	26 – 20
6G5–43864–00	26 – 19
64E–43865–00	27 – 16
6G5–43865–00	27 – 35
64E–43866–00	26 – 9
64E–43867–00	26 – 8
64E–43868–00	27 – 3
64E–43869–00	26 – 26
6H1–4386K–10	27 – 29
6E5–43872–00	26 – 12
64E–43873–00	27 – 24
6E5–43874–01	26 – 21
64E–43875–00	27 – 25
64E–43879–00	27 – 27
64E–43879–10	27 – 26
64E–4387A–00	27 – 23
67H–43880–01	27 – 28
64E–43883–00	26 – 11
64E–4388E–00	26 – 25
64E–4388E–10	27 – 1
64E–4388J–00	26 – 3
64E–43891–00	27 – 31
64E–43892–00	27 – 34
6E5–43896–00	27 – 9
64E–43897–00	26 – 24
64E–43898–00	26 – 7
68F–44117–01–1S	23 – 5
6E5–44118–01–1S	23 – 15
6E5–44120–03	23 – 22
6E5–44120–23	23 – 22
68F–44121–00	23 – 9
68J–44122–01	23 – 10

PART NO.	REF. NO.
6K1–44150–01	31 – 22
6G5–44150–02	29 – 23
688–44194–00	23 – 45
61A–44311–01	29 – 26
	31 – 25
6E5–44312–00	29 – 31
	31 – 30
6E5–44315–A0	29 – 35
	31 – 34
	41 – 13
61A–44322–02	29 – 27
	31 – 26
	41 – 19
6R3–44322–42	41 – 29
6G5–44323–00	29 – 34
	31 – 33
	41 – 23
6G5–44323–40	41 – 30
6E5–44352–01	29 – 32
	31 – 31
	41 – 22
6E5–44361–00	30 – 2
6E5–44361–20	30 – 2
	32 – 2
6E5–44365–00	29 – 30
	30 – 3
	31 – 29
	32 – 3
	41 – 7
6E5–44366–00	30 – 1
	32 – 1
	41 – 8
6E5–44391–00	22 – 19
6E5–44511–00–5B	25 – 39
6G5–44514–00–94	25 – 32
6G5–44526–00	24 – 3
68F–44533–00	3 – 25
68F–44551–00–8D	25 – 13
68F–44552–00–8D	25 – 24
68F–44553–00–4D	25 – 27
6G5–44555–00–94	25 – 16
68F–44556–00–4D	25 – 29
663–44575–00	25 – 38
6E5–44575–00	25 – 15
6E5–45111–02–8D	28 – 1
6E5–45111–23–8D	28 – 1
68F–45113–00	28 – 13
	40 – 18

PART NO.	REF. NO.
6G5–45114–A1	28 – 21
	41 – 3
663–45119–00	24 – 14
64D–45123–00	28 – 38
6E5–45123–00	28 – 31
	41 – 6
6E5–45155–00	28 – 4
6J9–45214–00	30 – 8
	32 – 8
6J9–45215–00	30 – 9
	32 – 9
6G5–45251–02	24 – 2
64E–45300–02–8D	29 – 1
64E–45300–22–8D	29 – 1
64H–45300–22–8D	31 – 1
6J9–45301–05–8D	29 – 2
	31 – 2
6E5–45318–00	28 – 35
6E5–45321–00	29 – 19
	31 – 18
6E5–45331–00–94	29 – 38
	31 – 37
6J9–45332–00–94	29 – 62
6K1–45332–01–94	31 – 61
688–45341–10	29 – 7
	31 – 8
6E5–45344–00	29 – 44
	31 – 43
6J9–45371–01	30 – 12
6K1–45371–02	32 – 12
64D–45375–00	28 – 39
688–45375–00	29 – 15
	31 – 16
64D–45376–00–94	29 – 14
	31 – 15
663–45376–00–94	29 – 14
6E5–45378–00	29 – 16
6J8–45378–00	31 – 17
6G5–45383–01	29 – 72
	31 – 72
6G5–45384–00	29 – 73
	31 – 73
6G5–45501–01	29 – 47
6G5–45501–21	29 – 47
	31 – 46
61A–45527–00	29 – 11
	31 – 12
6G5–45536–01	29 – 13

PART NO.	REF. NO.
6G5–45536–01	31 – 14
61A–45538–00	29 – 12
	31 – 13
6G5–45551–10	29 – 48
	31 – 47
6K1–45560–01	31 – 49
6G5–45560–10	29 – 50
6G5–45567–01–10	29 – 5
	31 – 6
6G5–45567–01–12	29 – 5
	31 – 6
6G5–45567–01–15	29 – 5
	31 – 6
6G5–45567–01–18	29 – 5
	31 – 6
6G5–45567–01–30	29 – 5
	31 – 6
6G5–45567–01–40	29 – 5
	31 – 6
6G5–45567–01–50	29 – 5
	31 – 6
6K1–45570–20	31 – 63
6G5–45571–02	29 – 64
6K1–45576–00	31 – 64
6G5–45576–10	29 – 65
6G5–45577–02–10	29 – 69
	31 – 70
6G5–45577–02–12	29 – 69
	31 – 70
6G5–45577–02–15	29 – 69
	31 – 70
6G5–45577–02–18	29 – 69
	31 – 70
6G5–45577–02–30	29 – 69
	31 – 70
6G5–45577–02–40	29 – 69
	31 – 70
6G5–45577–02–50	29 – 69
	31 – 70
6K1–45578–01–10	31 – 66
6K1–45578–01–12	31 – 66
6K1–45578–01–15	31 – 66
6K1–45578–01–18	31 – 66
6K1–45578–01–30	31 – 66
6K1–45578–01–40	31 – 66
6K1–45578–01–50	31 – 66
6E5–45587–01–10	29 – 41
	31 – 40

PART NO.	REF. NO.
6E5–45587–01–12	29 – 41
	31 – 40
6E5–45587–01–15	29 – 41
	31 – 40
6E5–45587–01–18	29 – 41
	31 – 40
6E5–45587–01–30	29 – 41
	31 – 40
6E5–45587–01–40	29 – 41
	31 – 40
6E5–45587–01–50	29 – 41
	31 – 40
6J9–45611–01	29 – 52
6K1–45611–10	31 – 51
6G5–45631–10	29 – 60
	31 – 59
6E5–45633–01	29 – 61
	31 – 60
6E5–45634–01	29 – 54
	31 – 53
6K1–45641–01	31 – 52
6E5–45641–03	29 – 53
6G5–45930–00–98	30 – 22
6G5–45932–00–98	30 – 22
6G5–45941–00–98	30 – 22
6G5–45943–01–98	30 – 22
6G5–45945–01–98	30 – 22
6G5–45947–01–98	30 – 22
6G5–45949–00–98	30 – 22
6G5–45952–00–98	30 – 22
6K1–45970–01–98	32 – 19
6G5–45970–02–98	30 – 22
6R1–45970–A0	32 – 19
6R4–45970–A0	30 – 22
6K1–45972–01–98	32 – 19
6G5–45972–02–98	30 – 22
6R1–45972–A0	32 – 19
6R4–45972–A0	30 – 22
6K1–45974–02–98	32 – 19
6G5–45974–03–98	30 – 22
6R1–45974–A0	32 – 19
6R4–45974–A0	30 – 22
6G5–45976–01–98	30 – 22
6R1–45976–A0	32 – 19
6R4–45976–A0	30 – 22
6K1–45978–02–98	32 – 19
6G5–45978–03–98	30 – 22
6R1–45978–A0	32 – 19

PART NO.	REF. NO.
6R4–45978–A0	30 – 22
6E5–45987–01	30 – 17
	32 – 14
688–45997–01	30 – 18
	32 – 15
68F–46241–10	6 – 10
703–48205–17	36 – 1
703–48205–A4	36 – 1
704–48207–23	36 – 2
701–48320–50	36 – 3
701–48320–60	36 – 3
701–48320–80	36 – 3
6E5–48344–00	23 – 13
701–48350–00	36 – 3
701–48350–20	36 – 3
68F–48531–10	23 – 1
663–48538–00	23 – 2
6E5–61301–01	35 – 1
6E5–61303–00	35 – 5
6E5–61311–11	35 – 3
6E5–61313–00	35 – 2
6E5–61315–00	35 – 4
6E5–61350–02	34 – 1
6E5–61351–01	34 – 2
6E5–61355–00	34 – 5
68F–81128–00	19 – 44
6E5–81332–00	16 – 14
68F–81336–00	19 – 43
68F–81337–10	16 – 18
68F–81410–00	16 – 2
68F–81450–00	16 – 1
68F–81800–01	21 – 1
67F–81801–00	21 – 5
67F–81807–00	21 – 10
67F–81808–00	21 – 8
67F–81809–00	21 – 19
67F–81810–00	21 – 3
67F–81813–00	21 – 6
68F–81820–00	21 – 7
67F–81821–00	21 – 13
6K7–81826–10	21 – 24
67F–81828–00	21 – 25
65L–8182A–00	7 – 31
65L–8182E–00	7 – 33
65L–8182F–00	7 – 34
65L–8182K–00	7 – 32
67F–81830–00	21 – 17
67F–81832–00	21 – 11

PART NO.	REF. NO.
67F–81836–00	21 – 12
67F–81839–00	21 – 21
67F–8183R–00	21 – 16
67F–8183T–00	21 – 18
68F–81840–00	21 – 4
67F–81841–00	21 – 14
67F–81842–00	21 – 20
67F–81846–00	21 – 26
67F–81850–00	21 – 2
67F–81857–00	21 – 9
67F–81869–00	21 – 23
67F–81891–00	21 – 15
6E5–81900–01	13 – 28
68F–81919–00	19 – 70
68F–81919–20	19 – 69
6E5–81922–00	13 – 29
60V–81925–00	21 – 28
68F–81941–01	21 – 22
68F–81942–00	19 – 54
68F–81948–01	19 – 1
68F–81949–00	19 – 72
6H2–81949–11	18 – 3
68F–81949–20	19 – 10
68V–8194A–00	19 – 23
68V–81950–00	18 – 13
68F–81950–01	19 – 14
68V–81953–00	19 – 28
68F–8195A–00	19 – 34
68F–81960–01	19 – 46
69J–81972–01–1S	19 – 48
69J–81975–A0	19 – 47
6K1–81980–00	38 – 17
68F–82105–00	18 – 6
68F–82117–00	19 – 27
6Y5–82117–00	37 – 18
682–82119–01	19 – 15
6E5–82147–00	24 – 26
6E5–82147–20	24 – 26
6E5–82148–00	24 – 6
6E5–82149–00	25 – 19
1E6–82151–00	37 – 17
67F–82151–00	19 – 35
68F–82151–00	19 – 33
67F–82151–10	19 – 36
68F–82170–00	19 – 32
68F–82176–00	19 – 41
68F–82310–01	17 – 25
68F–82316–00	17 – 11

PART NO.	REF. NO.
6A0–82317–00	13 – 9
	17 – 15
	19 – 6
663–82317–01	16 – 19
68F–82370–01	17 – 30
63V–82377–50	24 – 40
68F–82380–01	9 – 21
68F–82384–00	9 – 22
68F–82388–00	9 – 23
68F–82507–00	7 – 50
68F–82509–01	7 – 22
61B–82510–01	39 – 4
6K1–82510–06	38 – 3
6G0–82519–00	17 – 20
68F–8252U–20	17 – 34
68F–8252U–30	17 – 38
703–82531–00	37 – 28
6E5–82531–10	18 – 16
68F–82535–00	19 – 2
68F–82544–10	10 – 21
68F–82544–20	10 – 24
61B–82551–01	39 – 3
68F–82553–80	37 – 19
68F–82553–90	37 – 19
682–82556–00	38 – 6
	39 – 7
688–82560–10	20 – 4
6R3–82563–00	18 – 24
61B–82570–02	39 – 1
6K1–82570–07	38 – 1
6K1–82571–01	38 – 2
6K1–82575–00	38 – 5
	39 – 6
676–82577–00	39 – 5
703–82577–00	38 – 4
6E3–8257H–00	22 – 62
68F–82582–00	21 – 29
6E5–82587–00	18 – 25
6E5–82588–00	18 – 11
	22 – 31
6K7–82588–00	18 – 36
61A–82588–01	23 – 47
61B–82588–01	39 – 2
61B–8258A–01	38 – 19
	39 – 19
6K1–8258A–40	38 – 18
	39 – 18
68F–82590–30	18 – 17

PART NO.	REF. NO.
68F–82590–40	18 – 17
6R3–8259E–00	13 – 7
60V–8259F–00	23 – 46
68F–8259M–20	18 – 20
68F–82846–00	19 – 37
6R5–83383–00	39 – 12
688–83383–11	38 – 11
6Y5–83500–S5	37 – 7
6Y5–8350F–00	37 – 22
6Y5–8350T–03	37 – 1
6Y5–83533–T2	37 – 11
6Y5–83553–00	37 – 16
6Y5–83553–80	37 – 6
6Y5–83553–F1	37 – 24
6Y5–83553–M0	37 – 16
6H1–83557–00	14 – 47
6Y5–83557–00	37 – 20
6Y5–83557–10	37 – 20
6Y5–83557–31	37 – 12
6E5–83558–00	30 – 15
6E5–83558–10	29 – 18
6Y5–83570–S5	37 – 8
68F–83579–00	17 – 42
68F–83614–00	18 – 26
6R3–83614–00	18 – 28
6K1–83614–01	38 – 7
	39 – 8
6K1–83623–41	16 – 24
6K1–83623–50	16 – 25
65L–83625–40	19 – 71
6A1–83625–41	16 – 21
65L–83625–50	19 – 71
6A1–83625–51	16 – 22
67F–83627–01	21 – 32
68F–83634–00	18 – 33
68F–83635–00	18 – 29
67H–83672–00	25 – 3
64E–83672–02	25 – 3
68F–83688–00	20 – 5
61A–83721–00	16 – 4
6Y5–83728–00	37 – 13
68F–83919–00	18 – 19
68F–8431R–10	20 – 6
68F–84352–00	20 – 7
72X–85075–L0	27 – 21
68F–85119–00	17 – 5
68F–85516–01	17 – 12
60V–85542–01–94	17 – 1

PART NO.	REF. NO.
68F–85544–00	19 – 39
60V–85548–00	17 – 8
68F–85564–00	17 – 2
60V–85580–00	16 – 3
6E5–85711–40	16 – 23
6E5–85711–50	16 – 23
6E5–85711–60	16 – 23
6E5–85720–04	13 – 34
6R3–85721–30	13 – 35
6R3–85721–80	13 – 35
68F–8572S–00	19 – 42
67H–85730–01	13 – 4
6Y5–85752–01	37 – 25
61A–85790–00	18 – 22
61B–85830–00	39 – 13
6K1–85830–01	38 – 12
65L–85832–00	19 – 60
61A–85885–00	8 – 10
6K7–85886–00	8 – 11
61A–85895–00	20 – 1
68H–8591A–20	17 – 6
68J–8591A–20	17 – 6
68L–8591A–20	17 – 6
68F–8591A–A0	17 – 6
68F–8591A–B0	17 – 6
60V–8591B–00	17 – 18
68F–8592A–00	19 – 56
68F–86129–00	17 – 3
68F–86129–10	17 – 4
6Y5–87122–S0	37 – 15
61A–87149–00	19 – 13
68F–W0001–01	40 – 1
6G5–W0001–C1	41 – 1
65J–W0004–01	11 – 2
68F–W0070–50	1 – 17
68J–W0070–N0	2 – 22
61A–W0078–2A	41 – 28
61A–W0078–A3	41 – 18
68L–W0090–12–1S	3 – 1
68F–W0090–13–1S	3 – 1
68H–W0090–13–1S	3 – 1
68F–W1135–00	19 – 65
90101–09M70	35 – 9
90101–12M03	24 – 41
90101–12M05	24 – 41
90101–12M77	24 – 41
90105–06028	11 – 10
90105–10M00	30 – 13
90105–10M00	32 – 13
90105–10M20	3 – 15
90109–06M40	12 – 5
90109–06M80	18 – 31
	22 – 16
	23 – 4
90109–06M82	22 – 5
90109–06M86	22 – 22
90109–08022	4 – 24
90109–12M37	25 – 36
90109–14MA5	25 – 20
90110–06M06	12 – 46
90110–06M07	19 – 50
90110–08M04	10 – 5
90111–06034	17 – 43
90116–08M45	3 – 17
90119–06077	22 – 38
90119–06M10	29 – 22
	31 – 21
90119–06M65	13 – 11
	19 – 7
90119–06M74	19 – 58
90119–06M88	14 – 22
	17 – 17
90119–06MA2	3 – 22
	4 – 16
	5 – 10
	17 – 19
90119–06MA3	4 – 7
	17 – 7
90119–06MA4	5 – 14
	19 – 19
	23 – 30
90119–06MA6	5 – 19
90119–06MA8	25 – 31
90119–08027	28 – 8
90119–08M14	29 – 37
	31 – 36
	41 – 26
90119–08M22	22 – 29
90119–08M60	10 – 2
90119–08M79	28 – 14
90119–08M94	3 – 16
90119–08MA8	5 – 8
90119–10M72	6 – 5
90119–10M89	30 – 7
	32 – 7
90149–05M05	38 – 20
90149–05M05	39 – 20
90152–05M08	30 – 10
	32 – 10
90157–06M11	23 – 43
90158–06002	37 – 26
90159–06M03	22 – 42
90159–06M16	11 – 20
90169–05M00	19 – 55
	22 – 55
90170–09M05	35 – 10
90170–14M06	35 – 6
90170–16M01	29 – 49
	31 – 48
90170–24M22	16 – 12
90171–18M04	30 – 20
	32 – 17
90179–06M24	1 – 13
	2 – 13
	11 – 16
90179–08003	21 – 27
90183–05M02	28 – 30
90185–05002	30 – 11
	32 – 11
90185–09M01	34 – 6
	35 – 11
90185–12M12	25 – 37
90185–14M00	25 – 22
90185–22M11	24 – 20
90201–05552	8 – 7
90201–06068	14 – 17
	22 – 13
90201–06M31	23 – 31
90201–08M00	6 – 16
90201–08M14	26 – 30
90201–08M54	22 – 27
90201–10M20	34 – 7
90201–10M76	35 – 8
90201–12M05	24 – 43
90201–13M01	24 – 42
90201–14M56	25 – 35
90201–15M58	25 – 21
90201–16M55	25 – 18
90201–22M01	29 – 10
	31 – 11
90201–23M01	4 – 26
90201–25M02	16 – 13
90201–26M57	25 – 33
90201–26M59	24 – 19
90201–30M92	29 – 70
90201–38M60	25 – 11
90202–05088	12 – 28
90202–08M20	23 – 11
90202–08M44	12 – 22
90202–16061	23 – 25
90202–26M18	25 – 34
90202–32M19	25 – 17
90202–40M47	25 – 7
90206–10M04	23 – 32
90206–15M18	22 – 12
90206–22M19	29 – 9
	31 – 10
90249–06M19	24 – 33
90250–08M07	29 – 59
	31 – 58
90280–03M01	6 – 19
90280–04M05	29 – 33
	31 – 32
	41 – 27
90280–05015	16 – 11
90282–04M00	29 – 71
	31 – 71
90340–08002	29 – 6
	31 – 7
90340–14M00	3 – 12
90384–06M07	3 – 8
90384–14M09	3 – 9
90386–06M12	23 – 14
90386–10M16	24 – 31
90386–15M73	22 – 11
90386–16M66	23 – 24
90386–22M98	24 – 38
	26 – 33
90386–25M31	24 – 18
90386–38M32	25 – 12
90387–05M00	8 – 13
90387–06011	2 – 14
90387–06M29	23 – 33
90387–06M43	22 – 39
90387–06M60	14 – 20
90387–06M91	13 – 10
	19 – 5
90387–08M31	10 – 4
90387–08M37	22 – 26
90387–10M05	24 – 34
90387–10M61	34 – 3
90430–08020	29 – 8
90430–08020	31 – 9
	41 – 5
90430–14115	3 – 13
	40 – 6
90445–07M00	12 – 8
90445–07M03	3 – 27
	11 – 8
90445–07M04	12 – 16
90445–07M09	12 – 9
90445–07M10	3 – 28
	12 – 11
90445–07M27	3 – 32
90445–07M33	30 – 14
90445–07M43	13 – 8
90445–07M44	11 – 19
90445–07M45	3 – 31
90445–07M80	12 – 13
90445–07MA4	3 – 30
	12 – 12
90445–07MA5	12 – 10
90445–07MA6	3 – 29
90445–07ME8	29 – 17
90445–07ME9	29 – 17
90445–09097	19 – 52
90445–09M25	5 – 31
90445–11M26	13 – 32
90445–11M35	22 – 57
90445–11M81	13 – 32
90445–12207	13 – 16
90445–12M13	13 – 16
90445–12M14	12 – 29
90445–13M01	15 – 4
	33 – 9
90445–13M12	14 – 49
90445–13M17	14 – 3
90445–13M31	14 – 26
90445–13M35	33 – 11
90445–15M03	6 – 7
90446–15M07	14 – 48
90446–17M72	9 – 41
90446–20MF5	9 – 43
90447–07007	17 – 33
90447–07011	18 – 1
90447–13007	9 – 42
90448–03001	17 – 31
90450–10M07	15 – 2
90464–05141	19 – 30
90464–07M05	12 – 18
90464–07M20	3 – 33
	12 – 17
90464–13M34	13 – 19
	14 – 2
90464–18M46	19 – 20
90464–20213	18 – 30
90464–20258	22 – 52
90464–23199	19 – 21
90465–08M23	16 – 17
90465–08M63	24 – 23
90465–11M10	7 – 58
	12 – 7
	13 – 14
	14 – 5
	17 – 27
	18 – 2
	22 – 58
	24 – 21
	25 – 5
	30 – 16
	37 – 14
90465–11M52	18 – 18
	19 – 31
90465–12M56	19 – 3
90465–13M11	13 – 3
90465–13M18	19 – 49
	20 – 2
90467–08M18	5 – 32
	12 – 31
	19 – 53
90467–23M16	5 – 40
90468–05M03	12 – 27
90468–07M02	12 – 14
90468–18008	23 – 12
90480–06M19	15 – 6
90480–10M23	8 – 14
	14 – 21
90480–13M24	22 – 40
90480–20M05	5 – 35
90480–22M15	17 – 26
90480–22M81	22 – 25
90501–11M10	29 – 25
	31 – 24
90501–12082	23 – 19
90501–16M11	5 – 34
90501–16M37	29 – 55
	31 – 54
90506–14M24	24 – 36

PART NO.	REF. NO.
90506–16M34	22 – 17
90506–16M39	6 – 6
90560–12M01	34 – 4
91490–40030	30 – 21
	32 – 18
91690–30010	23 – 3
91690–30020	24 – 35
92903–05600	17 – 29
92903–06100	16 – 6
92903–06600	10 – 23
	11 – 14
	16 – 7
	17 – 10
	23 – 8
92903–08100	18 – 10
92903–08600	6 – 3
	10 – 20
	21 – 31
	23 – 17
92990–04100	37 – 4
92990–05100	38 – 9
	39 – 10
92990–05200	2 – 19
92990–05600	11 – 5
	38 – 22
	39 – 22
92990–06100	1 – 4
	2 – 4
	38 – 15
	39 – 16
92990–06600	13 – 41
	24 – 12
	38 – 16
	39 – 17
92990–10600	18 – 23
92990–18200	30 – 19
	32 – 16
92995–04100	23 – 49
92995–05100	16 – 9
92995–05600	5 – 25
	16 – 10
92995–06100	12 – 44
	19 – 17
	24 – 5
92995–06600	1 – 10
	2 – 10
	12 – 45
	14 – 51

PART NO.	REF. NO.
92995–06600	16 – 16
	17 – 22
	18 – 5
	19 – 9
	20 – 9
	24 – 8
	28 – 6
92995–08100	24 – 17
	28 – 16
92995–08600	18 – 8
	28 – 23
	29 – 46
	31 – 45
92995–10100	25 – 26
	30 – 6
	32 – 6
92995–14600	25 – 23
93101–22M15	4 – 14
	40 – 16
93101–28M16	29 – 39
	31 – 38
	41 – 14
93101–30M17	29 – 67
	31 – 68
	41 – 17
93102–08M43	27 – 36
93102–35M61	4 – 13
	40 – 15
93102–40M14	4 – 5
	40 – 13
93106–09014	29 – 21
	31 – 20
	41 – 10
93210–06270	2 – 15
93210–08287	33 – 14
93210–09165	23 – 23
93210–10M74	26 – 4
93210–13M04	12 – 21
93210–16275	34 – 9
93210–19M82	12 – 4
93210–37160	29 – 29
	31 – 28
	41 – 12
93210–37MH7	25 – 6
93210–41042	25 – 28
93210–55M14	29 – 43
	31 – 42
	41 – 15

PART NO.	REF. NO.
93210–58144	29 – 20
	31 – 19
	41 – 9
93210–74M35	4 – 15
	40 – 17
93210–86M38	29 – 28
	31 – 27
	41 – 11
93210–97M55	29 – 68
	31 – 69
	41 – 16
93211–04001	4 – 6
	40 – 14
93306–00001	9 – 3
93306–001U0	9 – 5
93306–208U0	4 – 10
93306–209U0	29 – 63
93310–32337	4 – 25
93310–836U0	4 – 27
93310–954U1	4 – 8
93311–928U5	29 – 3
	31 – 3
93311–940U3	4 – 4
93315–425V3	29 – 51
	31 – 50
93315–43061	29 – 66
	31 – 67
93317–330U2	29 – 40
	31 – 39
93332–00048	31 – 62
93332–000V3	29 – 4
93341–440U5	31 – 65
93341–465U4	31 – 5
93341–930V2	29 – 42
	31 – 41
93390–000U2	31 – 4
93410–16006	23 – 26
93410–22M11	24 – 39
93410–37M04	25 – 14
93410–40M03	4 – 11
93420–36M01	28 – 36
93501–04M02	23 – 18
93503–16003	29 – 58
	31 – 57
93507–32009	29 – 56
	31 – 55
93511–32017	29 – 57
	31 – 56

PART NO.	REF. NO.
93605–10108	6 – 14
93606–12019	29 – 36
	31 – 35
	41 – 25
93608–12063	3 – 14
93608–12M05	28 – 7
	30 – 4
	32 – 4
93700–06M03	23 – 21
	24 – 13
94702–00404	5 – 41
94702–00405	5 – 41
95333–08600	18 – 9
95380–03600	14 – 39
95380–04600	37 – 5
95380–05600	12 – 25
	23 – 35
	38 – 10
	39 – 11
95380–06600	1 – 5
	2 – 5
	13 – 42
	22 – 41
	23 – 44
	38 – 14
	39 – 15
95380–08700	28 – 17
95380–12600	24 – 44
95380–14700	35 – 7
95670–06660	11 – 15
95707–08600	6 – 20
95780–10300	25 – 9
95895–06016	22 – 43
95895–06020	18 – 12
	22 – 32
97013–05020	17 – 28
97013–06012	23 – 7
97013–06014	10 – 22
	17 – 9
97013–06035	16 – 5
97013–06060	11 – 13
97013–08012	6 – 9
97013–08030	23 – 16
97013–08045	6 – 2
	21 – 30
97013–08055	10 – 19
97075–08035	22 – 28
97075–10045	30 – 5

PART NO.	REF. NO.
97075–10045	32 – 5
97080–06100	13 – 40
97080–08016	26 – 31
97095–05012	5 – 24
97095–06010	19 – 16
	24 – 7
	28 – 5
97095–06012	14 – 50
	17 – 21
	18 – 4
	19 – 8
97095–06014	18 – 32
97095–06016	1 – 9
	2 – 9
	18 – 14
	20 – 8
	22 – 14
97095–06020	12 – 43
	23 – 6
97095–06030	19 – 66
	24 – 4
97095–08016	18 – 7
97095–08020	24 – 16
97095–08025	6 – 17
	29 – 45
	31 – 44
97095–08030	28 – 22
97095–08045	28 – 15
97095–10045	25 – 25
97513–08570	9 – 40
97595–06416	14 – 16
97595–06514	14 – 19
97595–06550	14 – 42
97607–04310	27 – 32
97780–50616	2 – 18
	19 – 45
97780–50620	19 – 38
97780–60525	25 – 2
97780–60620	19 – 29
97880–05016	11 – 4
97880–06012	24 – 11
97885–04016	23 – 48
97885–05012	20 – 3
97885–05030	16 – 8
97885–06010	16 – 15
97885–06016	25 – 4
97985–05212	8 – 12
97985–05330	8 – 16

PART NO.	REF. NO.
98586–05016	33 – 4
98780–04015	3 – 19
	5 – 3
98980–05010	38 – 8
	39 – 9
98980–06020	38 – 13
	39 – 14
99001–08600	29 – 24
	31 – 23
99590–10114	5 – 15
9E450–04433	37 – 2
9E450–04533	37 – 3

Z150/Z175/Z200/LZ150/LZ200
Z150P/Z175G/Z200N/LZ150P/LZ200N
PARTS CATALOGUE
©2003 by Yamaha Motor Co., Ltd.
1st edition, April 2003
All rights reserved.
Any reprinting or unauthorized use
without the written permission of
Yamaha Motor Co., Ltd.
is expressly prohibited.
Printed in Japan.