YAMAHA

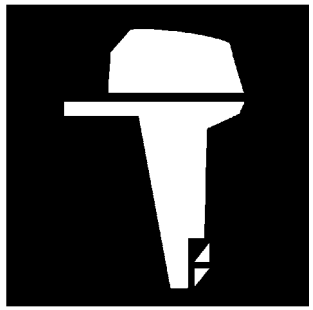

PARTS CATALOGUE

Z300TRC (6D01)
LZ300TRC (6D11)
Z300AETO'04 (6D01)
LZ300AETO'04 (6D11)

1C6D0-100E1

(2C6D0-100E1)

YAMAHA
GENUINE
Parts & Accessories

FOREWORD

This Parts Catalogue is related to the parts for the model(s) on the cover page. When you are ordering replacement parts, please refer to this Parts Catalogue and quote both part numbers and part names correctly.

1. Modifications or additions which have been made after the issue of the Parts Catalogue will be announced in the Parts News.
   It is advisable that you make the necessary corrections to the Parts Catalogue according to the Parts News.

2. Abbreviations
   The following abbreviations are used in this Parts Catalogue.

   "UR" Use specified parts number.
   "UN" Use as many as needed.
   "AP" Alternate Parts
   "LM" Locally Made (Parts need to be ordered locally)
   "F#" Frame No. (Applicable machine No.)
   "O/S" Over Size

3. The number of components for assembly
   - Parts, which are to be supplied in an assembly, are listed with a dot (.) in front of the part name as shown below.
   - The numeral appearing to the right of each component part indicates the quantity of parts for each assembly unit.

PART NO.	DESCRIPTION	Q'TY	REMARKS
2F5–83310–60	FRONT FLASHER LIGHT ASSY	2	
115–83311–60	.BULB (6V–18W)	1	

4. Applicable colours of graphics are represented in the "REMARKS" as shown below.

PART NO.	DESCRIPTION	Q'TY	REMARKS
2N4–24110–00–X5	FUEL TANK COMP.	2	MXR
3J1–24240–10	.GRAPHIC, FUEL TANK	1	FOR MXR

5. Note that the illustrations for reference in finding parts numbers are not to be used for assembling. When assembling, please use the applicable service manual.

6. The asterisk (*) before a reference number indicates modified items after the first edition.

7. Applicable Serial No.

   Engine Serial No.

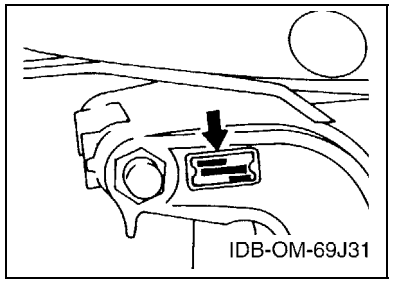

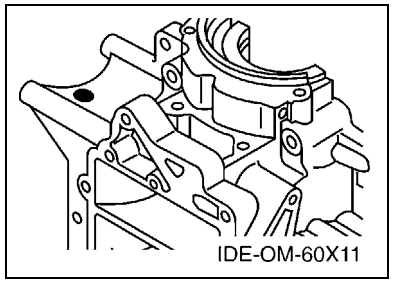

8. Applicable Engine Starting Serial No.

Model	Serial No.	Model	Serial No.
Z300	6D0-1000001	Z300A	6D0-1000001
LZ300	6D1-1000001	LZ300A	6D1-1000001

9. Applicable Colour Code

Abbreviation	Colour Name	Colour Code
DBN1	DARK BLUISH GRAY 1	008D

10. Quantity Column Information

Column No.	Name Of Q'ty Column	Applicable Model
1	6D01	Z300TRC,Z300AETO
2	6D11	LZ300TRC,LZ300AETO

CONTENTS

SHEET1/2
TOP COWLING 1 ..... A4
TOP COWLING 2 ..... A6
CYLINDER & CRANKCASE 1 ..... B1
CRANKSHAFT & PISTON B4
CYLINDER & CRANKCASE 2 ..... B6
CYLINDER & CRANKCASE 3 ..... C1
FUEL PUMP DRIVE GEAR C3
VAPOR SEPARATOR 1 ..... C4
VAPOR SEPARATOR 2 ..... C7
FUEL INJECTION PUMP D1
FUEL INJECTION NOZZLE D3
INTAKE D5
OIL PUMP D7
OIL TANK E2
FUEL 1 ..... E4
FUEL 2 ..... E6
GENERATOR E7
ELECTRICAL 1 ..... F1
ELECTRICAL 2 ..... F3
ELECTRICAL 3 ..... F5

INDEX

NUMERICAL INDEX G1

SHEET2/2
ELECTRICAL 4 ..... A4*
STARTING MOTOR A5*
BOTTOM COWLING A7*
CONTROL B3*
BRACKET 1 ..... B6*
BRACKET 2 ..... C1*
POWER TRIM & TILT ASSY 1 ..... C3*
POWER TRIM & TILT ASSY 2 ..... C6*
UPPER CASING C7*
LOWER CASING & DRIVE 1 ..... D2*
LOWER CASING & DRIVE 2 ..... D6*
LOWER CASING & DRIVE 3 ..... E1*
LOWER CASING & DRIVE 4 ..... E5*
STEERING GUIDE E7*
REMOTE CONTROL BOX F1*
METER F2*
SWITCH & PANEL F4*
REPAIR KIT 1 ..... F5*
REPAIR KIT 2 ..... F6*

INDEX

NUMERICAL INDEX G1*

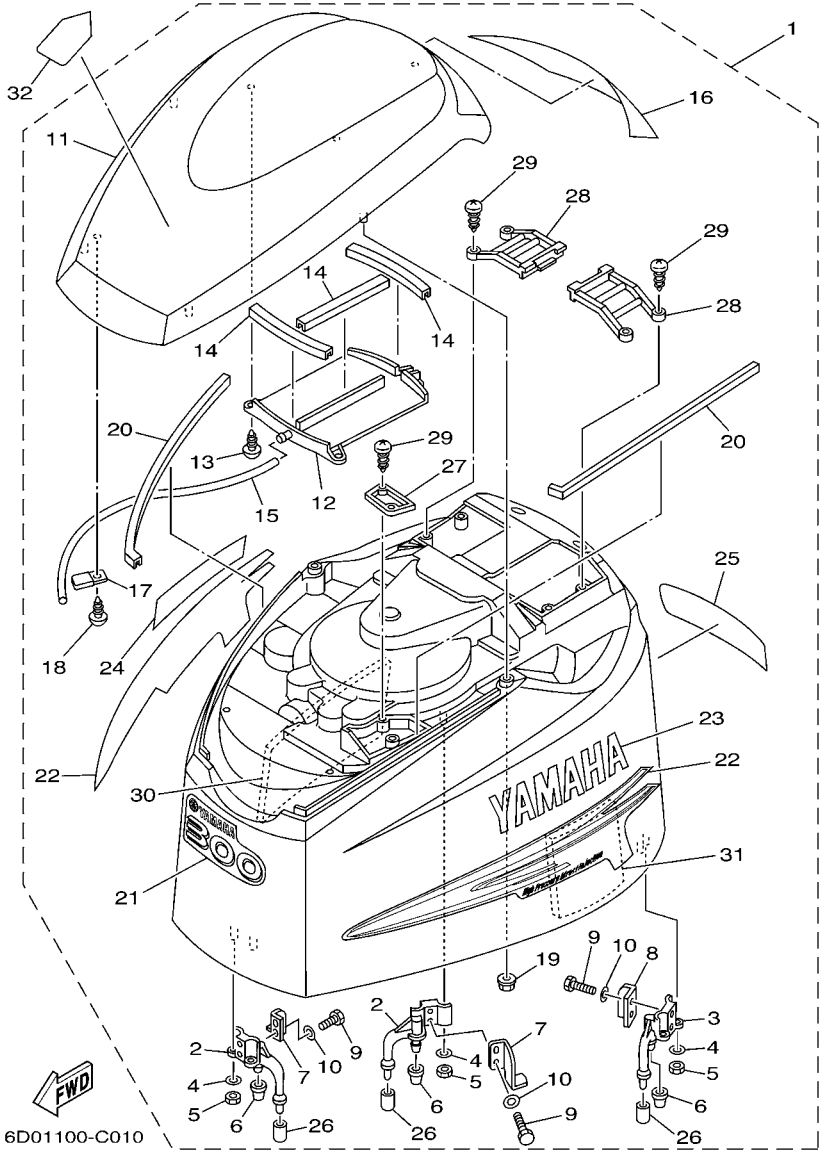

FIG. 1 TOP COWLING 1

REF. NO.	PART NO.	DESCRIPTION	6D01	6D11				REMARKS
1	6D0–42610–00–8D	TOP COWLING ASSY	1	1				FOR USA
2	68F–42647–01–94	.HOLDER, CLAMP BAND	2	2				
3	68F–42648–01–94	.HOLDER, CLAMP BAND	1	1				
4	92990–06100	.WASHER, SPRING	6	6				
5	95380–06600	.NUT, HEXAGON	6	6				
6	68F–42663–00	.DAMPER	3	3				
7	60V–42651–01	.HOOK	2	2				
8	60V–42652–00	.HOOK	1	1				
9	97095–06016	.BOLT	6	6				
10	92995–06600	.WASHER	6	6				
11	60V–42613–00–8D	.MOLDING, AIR DUCT	1	1				
12	60V–42621–00	.MLDG, TOP	1	1				
13	97780–50616	.SCREW, TAPPING	3	3				
14	60V–42664–00	.DAMPER	3	3				
15	90445–11M33	.HOSE (L440)	1	1				
16	60V–42687–00	.EMBLEM, REAR	1	1				
17	90462–08018	.CLAMP	1	1				
18	97780–50612	.SCREW, TAPPING	1	1				
19	90179–06M24	.NUT	6	6				
20	60V–42662–00	.DAMPER	2	2				
21	6D0–42677–00	.GRAPHIC, FRONT	1	1				
22	60V–W0070–00	.GRAPHIC SET	1	1				
23	60V–42681–00	.MARK, COWLING	1	1				
24	60V–42682–00	.MARK, COWLING	1	1				
25	6D0–42678–00	.GRAPHIC, REAR	1	1				
26	67F–13448–00	.CAP	3	3				
27	60V–42626–00	.LOUVER, 1	1	1				

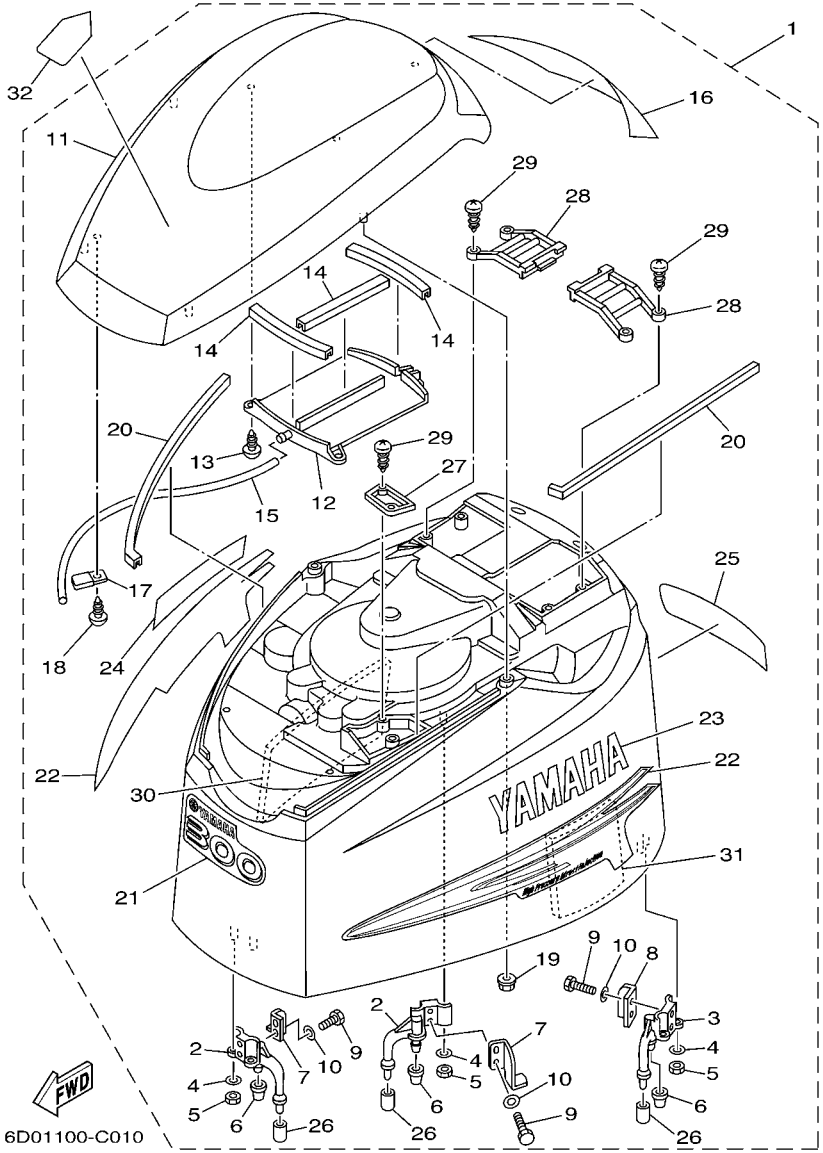

FIG. 1 TOP COWLING 1

REF. NO.	PART NO.	DESCRIPTION	6D01	6D11				REMARKS
28	60V–42626–10	.LOUVER, 1	2	2				
29	90160–05005	.SCREW, ROUND TAPPING	6	6				
30	60V–42637–00	.DAMPER, FORM	1	1				
31	60V–42637–10	.DAMPER, FORM	1	1				
32	68F–13434–00	LABEL, CAUTION	1	1				

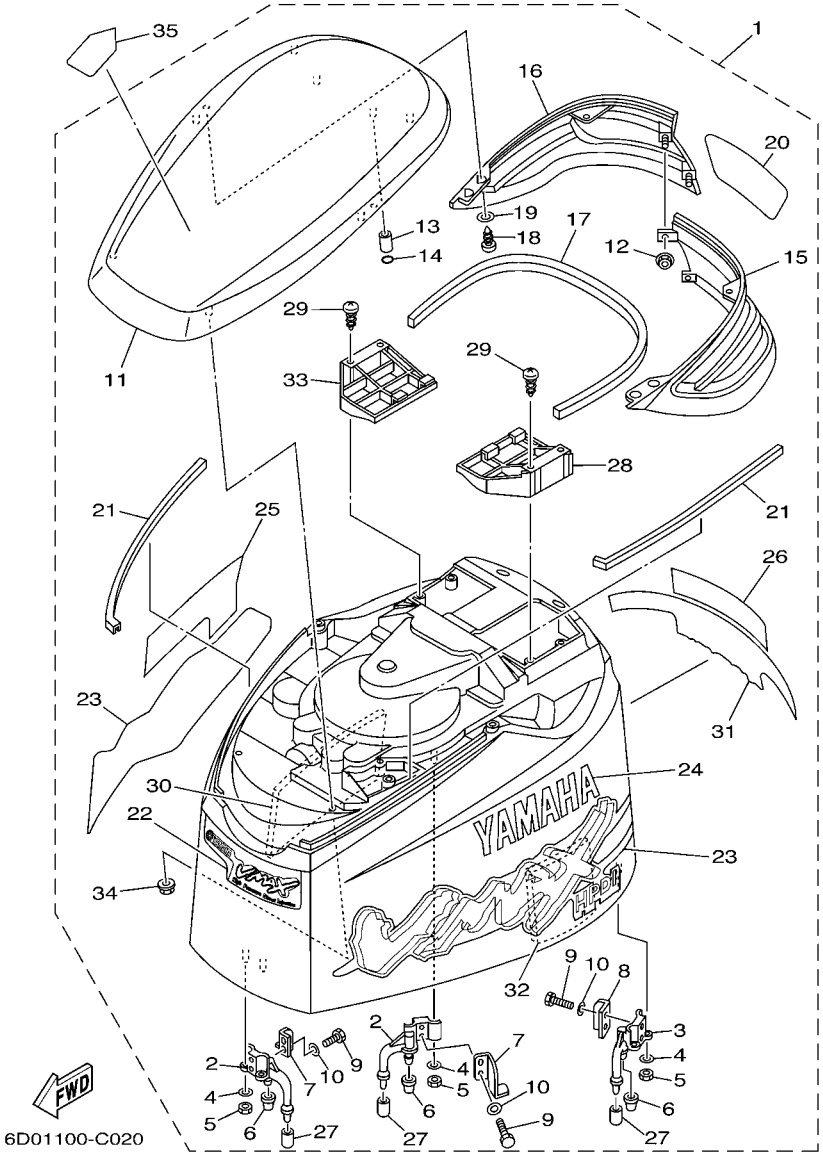

FIG. 2 TOP COWLING 2

REF. NO.	PART NO.	DESCRIPTION	6D01	6D11				REMARKS
1	6C9–42610–00–NA	TOP COWLING ASSY	1	1				VMAX-FOR OCE
2	68F–42647–01–94	.HOLDER, CLAMP BAND	2	2				
3	68F–42648–01–94	.HOLDER, CLAMP BAND	1	1				
4	92990–06100	.WASHER, SPRING	6	6				
5	95380–06600	.NUT, HEXAGON	6	6				
6	68F–42663–00	.DAMPER	3	3				
7	60V–42651–01	.HOOK	2	2				
8	60V–42652–00	.HOOK	1	1				
9	97095–06016	.BOLT	6	6				
10	92995–06600	.WASHER	6	6				
11	60X–42613–00–NA	.MOLDING, AIR DUCT	1	1				
12	90179–06M24	.NUT	2	2				
13	90387–06011	.COLLAR	2	2				
14	93210–06270	.O-RING	2	2				
15	60X–42636–00–NA	.LOUVER 2	1	1				
16	60X–42636–10–NA	.LOUVER 2	1	1				
17	60X–42662–00	.DAMPER	1	1				
18	97780–50616	.SCREW, TAPPING	4	4				
19	92990–05200	.WASHER, PLAIN	4	4				
20	6C9–42687–00	.EMBLEM, REAR	1	1				
21	60V–42662–00	.DAMPER	2	2				
22	6C9–42677–00	.GRAPHIC, FRONT	1	1				
23	6C9–W0070–00	.GRAPHIC SET	1	1				
24	6C9–42681–00	.MARK, COWLING	1	1				
25	6C9–42682–00	.MARK, COWLING	1	1				
26	6C9–42678–00	.GRAPHIC, REAR	1	1				
27	67F–13448–00	.CAP	3	3				

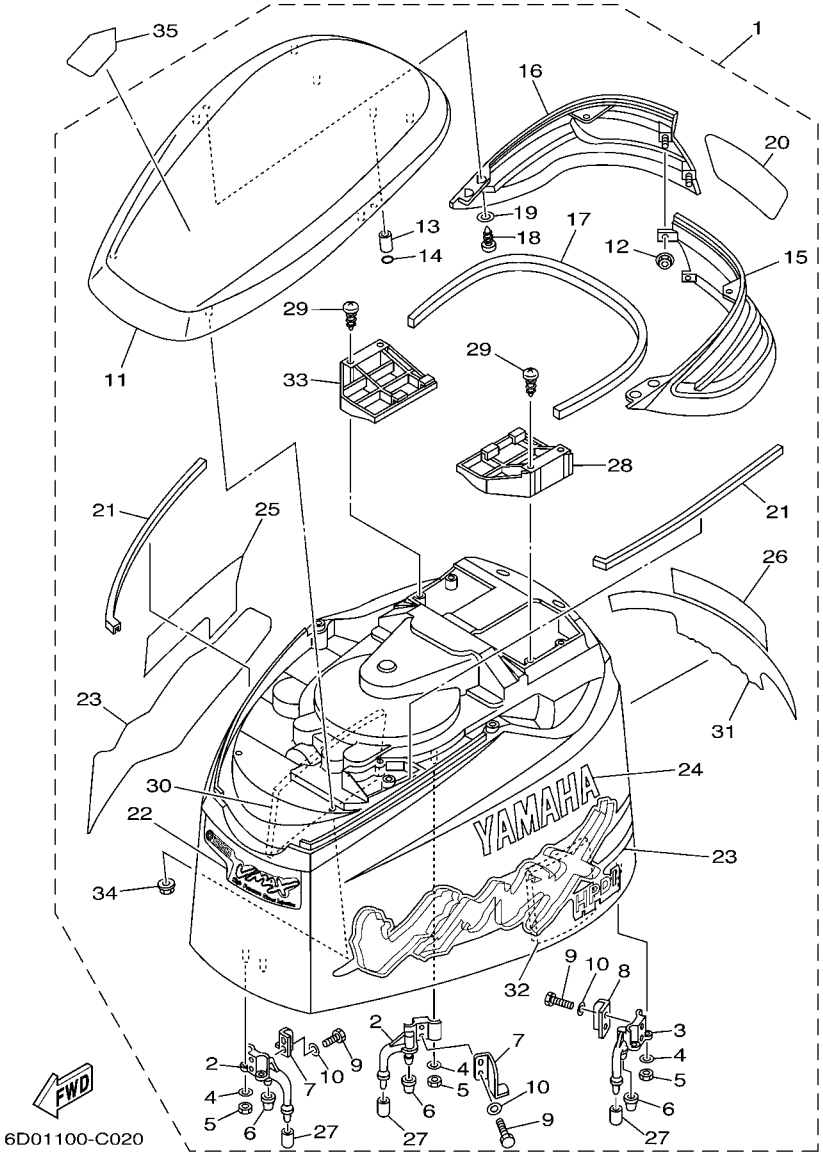

FIG. 2 TOP COWLING 2

REF. NO.	PART NO.	DESCRIPTION	6D01	6D11				REMARKS
28	60X–42626–00	.LOUVER, 1	1	1				
29	97780–50620	.SCREW, TAPPING	4	4				
30	60V–42637–00	.DAMPER, FORM	1	1				
31	6C9–4267A–00	.GRAPHIC, REAR 2	1	1				
32	60V–42637–10	.DAMPER, FORM	1	1				
33	60X–42626–10	.LOUVER, 1	1	1				
34	90179–06M24	.NUT	6	6				
35	68F–13434–00	LABEL, CAUTION	1	1				

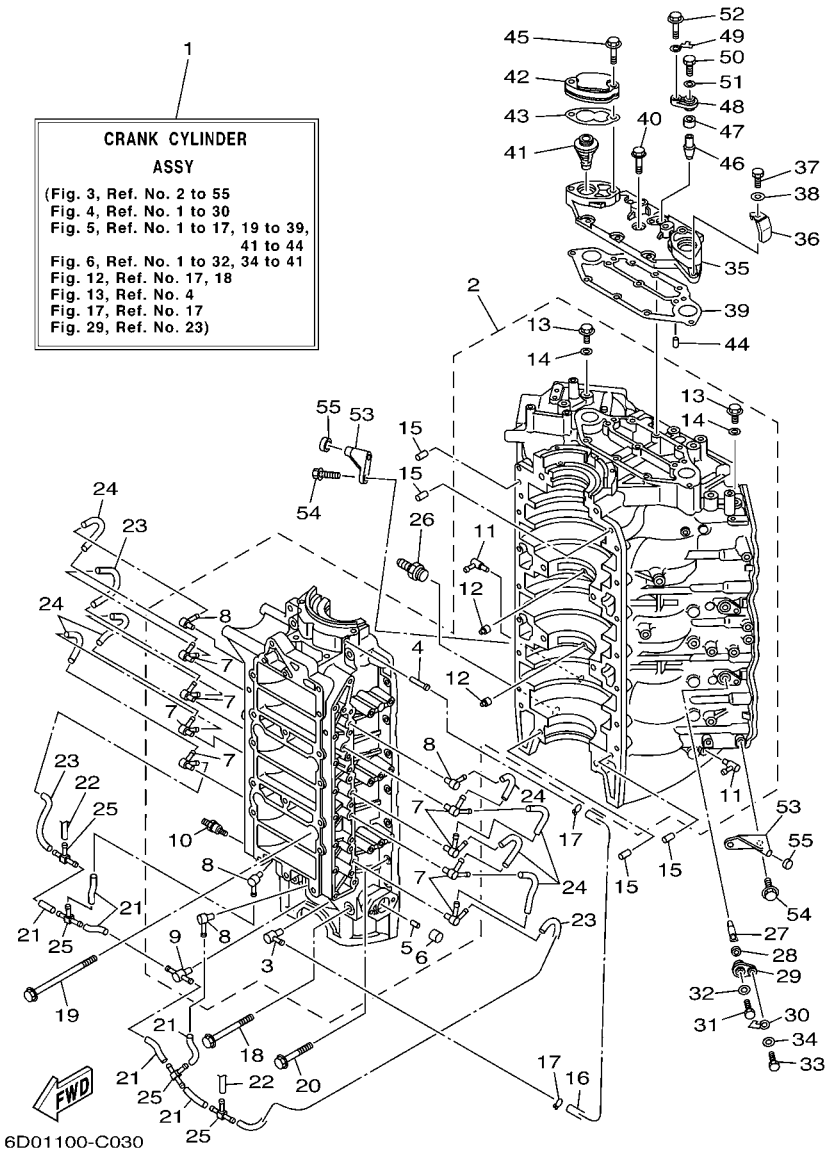

FIG. 3 CYLINDER & CRANKCASE 1

REF. NO.	PART NO.	DESCRIPTION	6D01	6D11				REMARKS
1	6D0–W0090–10–1S	CRANK CYLINDER ASSY	1	1				
2	6D0–15100–00–1S	CRANKCASE ASSY	1	1				
3	6E5–11372–01	.NIPPLE, HOSE	1	1				
4	624–14485–00	.PIPE, JOINT	1	1				
5	90384–06M07	.BUSH, BIMETAL FORMED	1	1				
6	90383–16M01	.BUSH, FORMED	1	1				
7	60V–11370–00	.CHECK VALVE ASSY	8	8				
8	650–11370–01	.CHECK VALVE ASSY	4	4				
9	60V–11370–10	.CHECK VALVE ASSY	1	1				
10	90116–08012	.BOLT, STUD	1	1				
11	6D0–11372–00	.NIPPLE, HOSE	2	2				
12	663–11518–01	.LOCK, BEARING	2	2				
13	90340–14M00	.PLUG, STRAIGHT SCREW	2	2				
14	90430–14115	.GASKET	2	2				
15	93608–12063	PIN, DOWEL	4	4				
16	90445–07M10	HOSE (L510)	1	1				
17	90468–07M02	CLIP	2	2				
18	97513–10590	BOLT, WITH WASHER	4	4				
19	90119–10M11	BOLT, WITH WASHER	4	4				
20	90119–06089	BOLT, WITH WASHER	14	14				
21	90445–07M03	HOSE (L34)	6	6				
22	90445–07016	HOSE (L60)	2	2				
23	90445–07M29	HOSE (L135)	3	3				
24	90445–07MA6	HOSE (L90)	7	7				
25	6E0–24378–00	PIPE, JOINT 4	4	4				
26	6G5–12581–00	JOINT, HOSE 1	1	1				
27	60V–11325–01	ANODE	3	3				

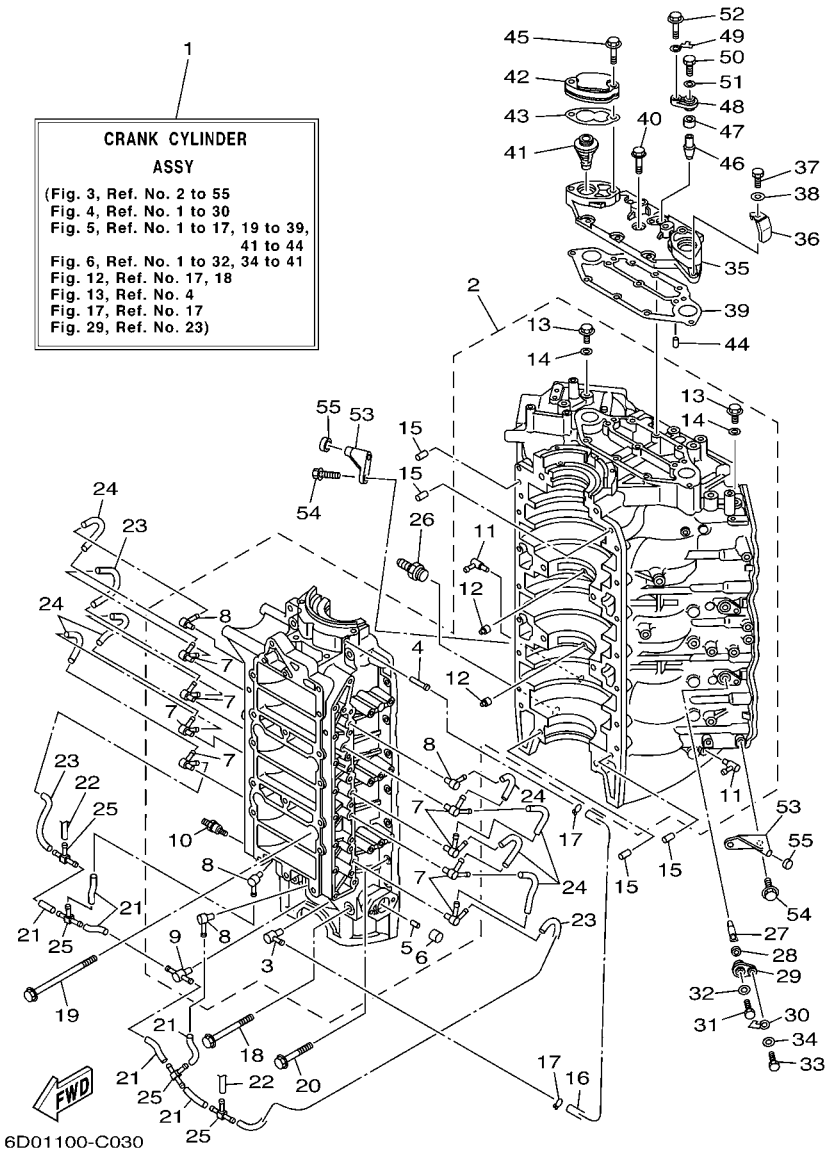

FIG. 3 CYLINDER & CRANKCASE 1

REF. NO.	PART NO.	DESCRIPTION	6D01	6D11				REMARKS
28	66M–11328–00	GROMMET, ANODE	3	3				
29	66M–11327–00–94	COVER, ANODE	3	3				
30	66M–12535–00	PLATE	3	3				
31	97095–05012	BOLT	3	3				
32	92995–05600	WASHER	3	3				
33	97013–06020	BOLT	3	3				
34	92903–06600	WASHER, PLATE	3	3				
35	60V–11371–00–94	COVER	1	1				
36	60V–24135–00	CLAMP 1	1	1				
37	97013–05012	BOLT	1	1				
38	92903–05600	WASHER, PLATE	1	1				
39	60V–11381–00	GASKET 1	1	1				
40	90119–06MA2	BOLT, WITH WASHER	7	7				
41	60V–12411–00	THERMOSTAT	2	2				
42	60V–12413–00–1S	COVER, THERMOSTAT	2	2				
43	60V–12414–A0	GASKET, COVER	2	2				
44	99480–06012	PIN	2	2				
45	90119–06055	BOLT, WITH WASHER	4	4				
46	66M–11325–00	ANODE	1	1				
47	66M–11328–00	GROMMET, ANODE	1	1				
48	66M–11327–00–94	COVER, ANODE	1	1				
49	66M–12535–00	PLATE	1	1				
50	97095–05012	BOLT	1	1				
51	92995–05600	WASHER	1	1				
52	90119–06MA2	BOLT, WITH WASHER	1	1				
53	6E5–42761–00–1S	STOPPER	2	2				
54	90119–06MA2	BOLT, WITH WASHER	4	4				

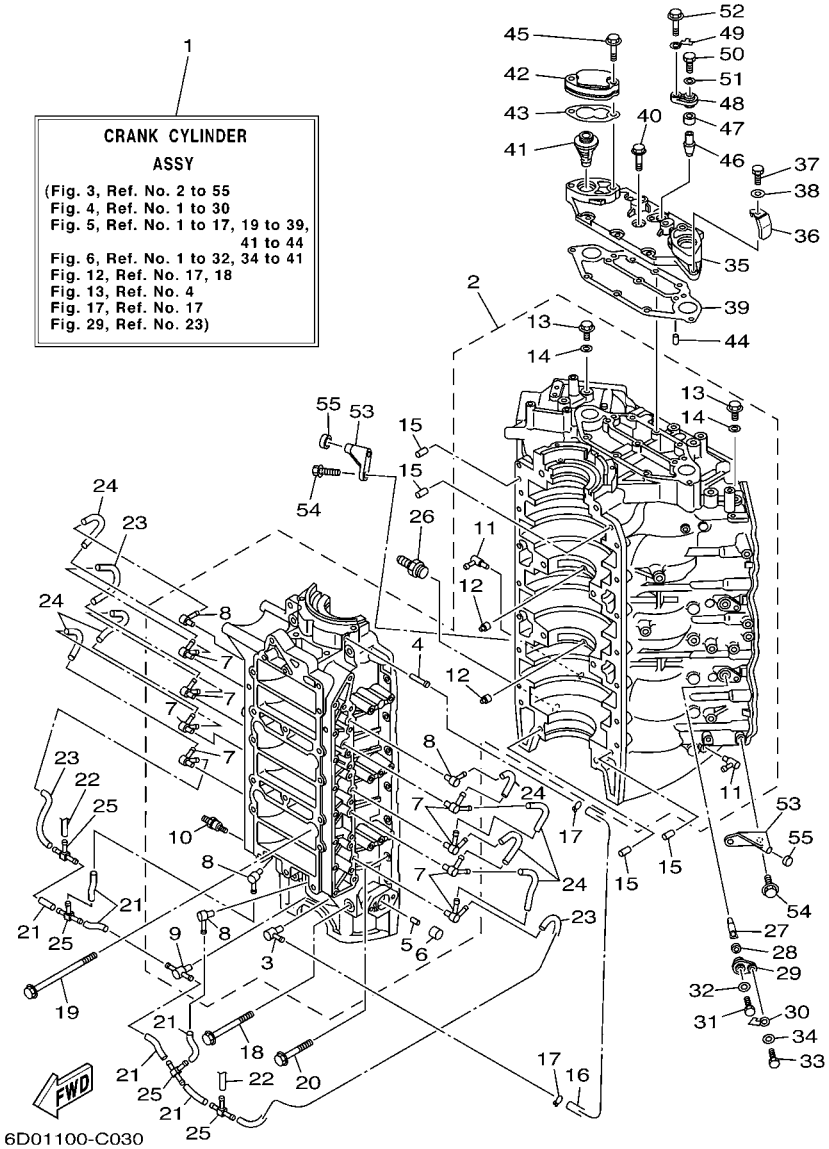

FIG. 3 CYLINDER & CRANKCASE 1

REF. NO.	PART NO.	DESCRIPTION	6D01	6D11				REMARKS
55	68F–44533–00	DAMPER, UPPER MOUNT RUBBER	2	2				

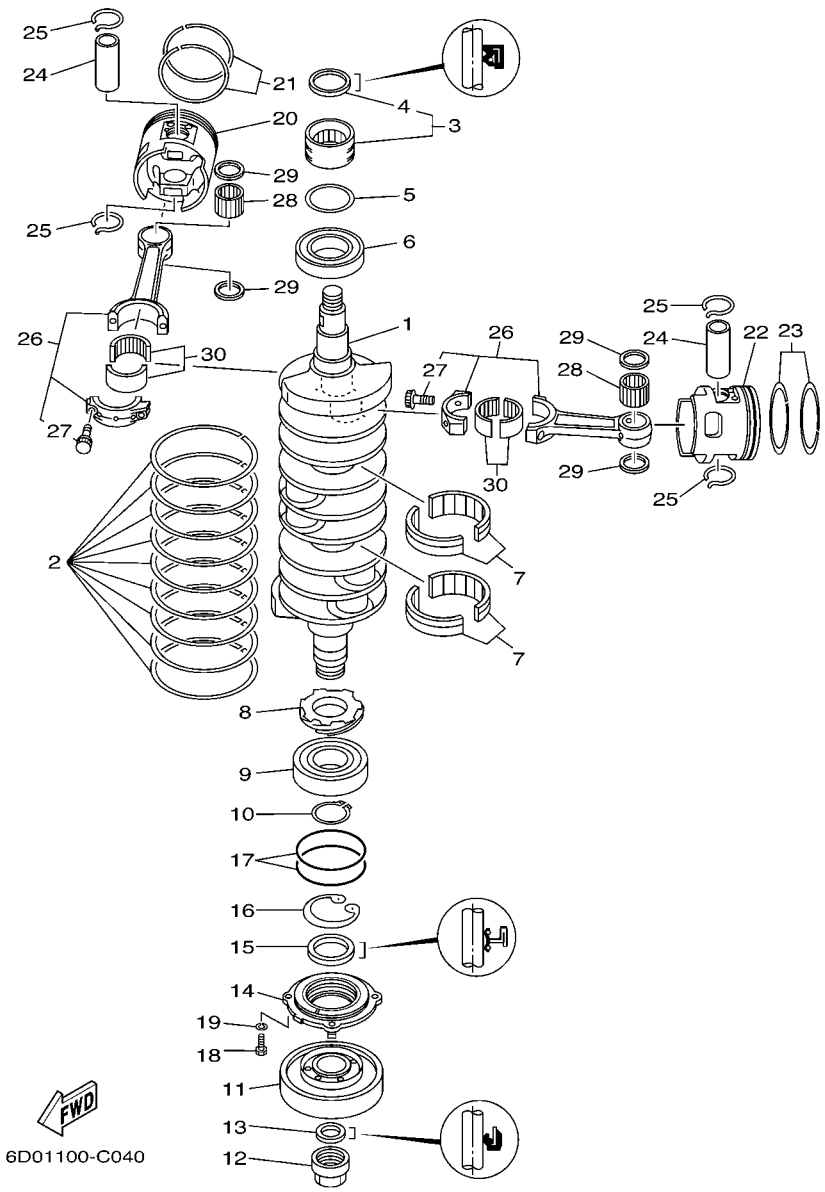

FIG. 4 CRANKSHAFT & PISTON

REF. NO.	PART NO.	DESCRIPTION	6D01	6D11				REMARKS
1	6D0–11411–00	CRANKSHAFT	1	1				
2	61A–11447–00	SEAL, CRANK	9	9				
3	93311–940V0	BEARING	1	1				
4	93102–40M38	.OIL SEAL	1	1				
5	60V–11479–00	GASKET	1	1				
6	93306–209U1	BEARING	1	1				
7	93310–959U0	BEARING	2	2				
8	61A–11536–00	GEAR, DRIVE	1	1				
9	93306–308U0	BEARING	1	1				
10	93410–40M03	CIRCLIP	1	1				
11	61A–11586–01	PULLEY, CRANKSHAFT BALANCE	1	1				
12	60V–11555–00	NUT, CRANKSHAFT 1	1	1				
13	93104–22M07	OIL SEAL	1	1				
14	6D0–15359–00–94	HOUSING, OIL SEAL	1	1				
15	93103–40011	OIL SEAL	1	1				
16	93420–61M07	CIRCLIP	1	1				
17	93210–85M32	O-RING	2	2				
18	97095–06020	BOLT	4	4				
19	92995–06100	WASHER, SPRING	4	4				
20	6D0–11631–00–85	PISTON (STD)	3	3				
	6D0–11635–00	PISTON (0.25MM O/S)	3	3				AP
	6D0–11636–00	PISTON (0.50MM O/S)	3	3				AP
21	6D0–11603–00	PISTON RING SET (STD)	3	3				
	6D0–11604–00	PISTON RING SET (0.25MM O/S)	3	3				AP
	6D0–11605–00	PISTON RING SET (0.50MM O/S)	3	3				AP
22	6D0–11642–00–85	PISTON 2 (STD)	3	3				
	6D0–11645–00	PISTON 2 (0.25MM O/S)	3	3				AP

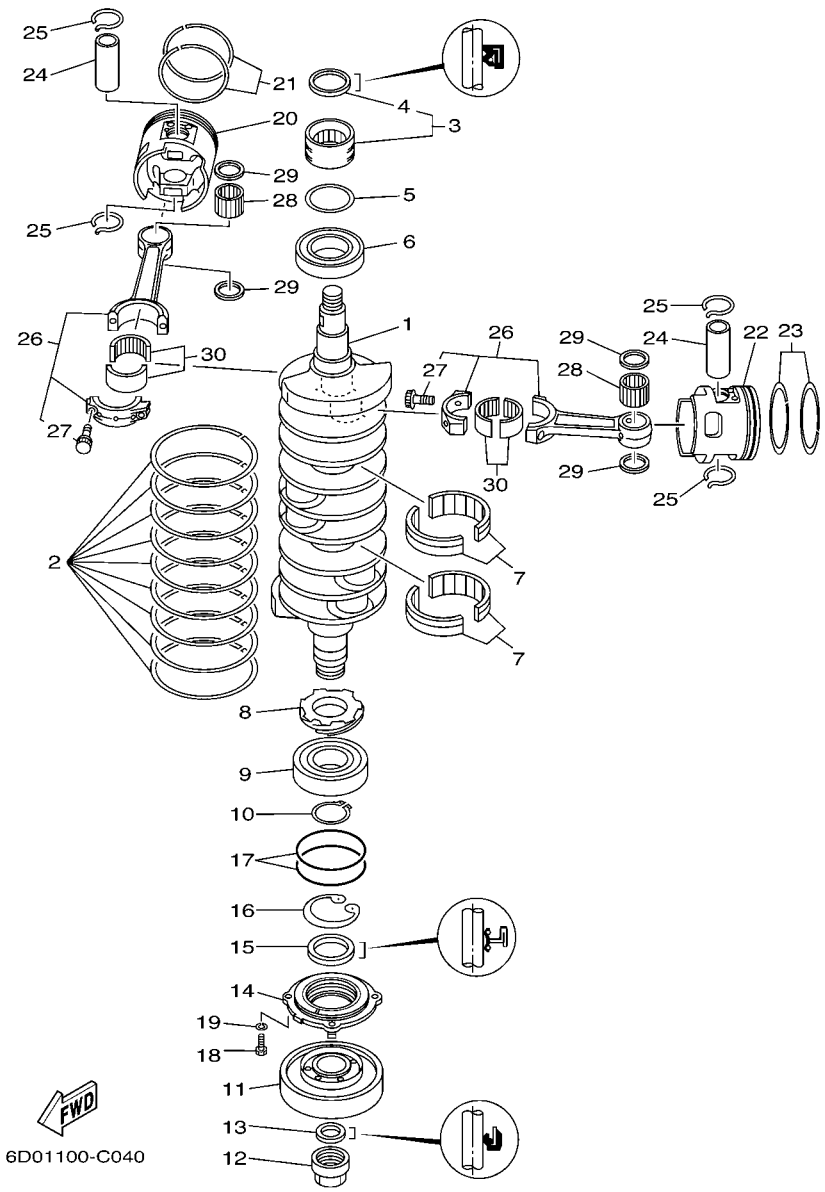

FIG. 4 CRANKSHAFT & PISTON

REF. NO.	PART NO.	DESCRIPTION	6D01	6D11				REMARKS
22	6D0–11646–00	PISTON 2 (0.50MM O/S)	3	3				AP
23	6D0–11603–00	PISTON RING SET (STD)	3	3				
	6D0–11604–00	PISTON RING SET (0.25MM O/S)	3	3				AP
	6D0–11605–00	PISTON RING SET (0.50MM O/S)	3	3				AP
24	6D0–11633–00	PIN, PISTON	6	6				
25	60X–11634–00	CLIP, PISTON PIN	12	12				
26	6D0–11650–00	CONNECTING ROD ASSY	6	6				
27	90109–09001	.BOLT	2	2				
28	93310–32657	BEARING	6	6				
29	90201–26M03	WASHER, PLATE	12	12				
30	93310–84106	BEARING	6	6				

FIG. 5 CYLINDER & CRANKCASE 2

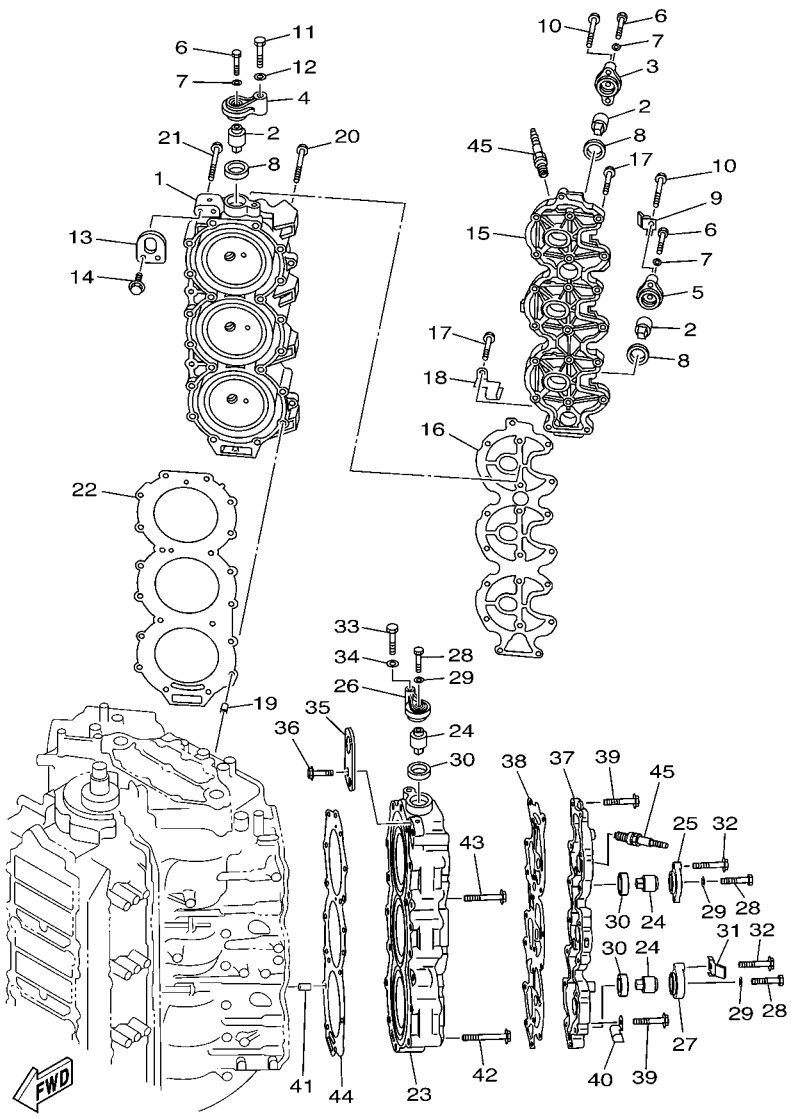

6D01100-C050

REF. NO.	PART NO.	DESCRIPTION	6D01	6D11				REMARKS
1	6D0–11111–00–1S	HEAD, CYLINDER 1	1	1				
2	67F–11325–00	ANODE	3	3				
3	67F–11327–00–94	COVER, ANODE	1	1				
4	69J–11327–00–94	COVER, ANODE	1	1				
5	60V–11327–00–94	COVER, ANODE	1	1				
6	97075–06020	BOLT	3	3				
7	92995–06600	WASHER	3	3				
8	67F–11328–00	GROMMET, ANODE	3	3				
9	60V–12535–00	PLATE	1	1				
10	97575–08550	BOLT, WITH WASHER	3	3				
11	97075–08035	BOLT	1	1				
12	92995–08600	WASHER	1	1				
13	68F–11119–00	HANGER, ENGINE	1	1				
14	90119–06MA2	BOLT, WITH WASHER	2	2				
15	60V–11191–00–1S	COVER, CYLINDER HEAD 1	1	1				
16	60V–11193–00	GASKET, HEAD COVER 1	1	1				
17	90119–06MA4	BOLT, WITH WASHER	18	18				
18	68F–83919–00	CLAMP, HARNESS	1	1				
19	99590–10114	PIN, DOWEL	2	2				
20	90119–08MA5	BOLT, WITH WASHER	18	18				
21	90119–08MA8	BOLT, WITH WASHER	2	2				
22	6D0–11181–00	GASKET, CYLINDER HEAD 1	1	1				
23	6D0–11121–00–1S	HEAD, CYLINDER 2	1	1				
24	67F–11325–00	ANODE	3	3				
25	67F–11327–00–94	COVER, ANODE	1	1				
26	69J–11327–00–94	COVER, ANODE	1	1				
27	60V–11327–00–94	COVER, ANODE	1	1				

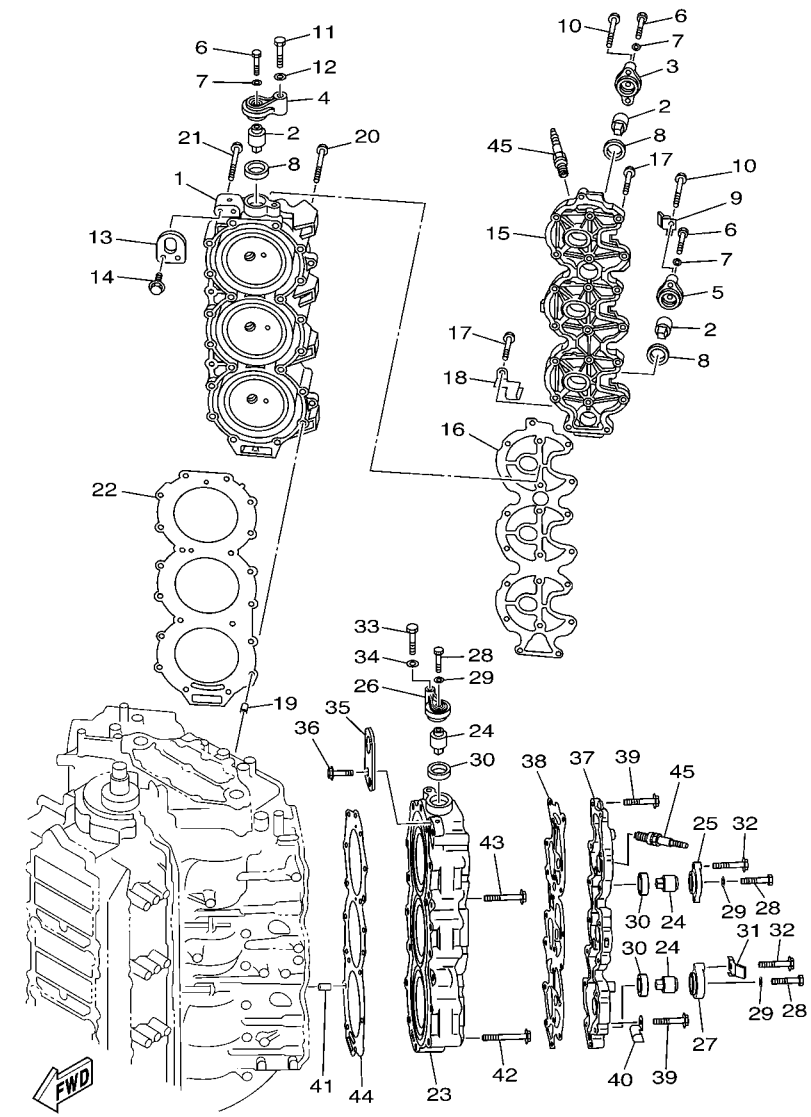

6D01100-C050

FIG. 5 CYLINDER & CRANKCASE 2

REF. NO.	PART NO.	DESCRIPTION	6D01	6D11				REMARKS
28	97075–06020	BOLT	3	3				
29	92995–06600	WASHER	3	3				
30	67F–11328–00	GROMMET, ANODE	3	3				
31	60V–12535–00	PLATE	1	1				
32	97575–08550	BOLT, WITH WASHER	3	3				
33	97075–08035	BOLT	1	1				
34	92995–08600	WASHER	1	1				
35	69J–1111E–00	HANGER, ENGINE 2	1	1				
36	90119–06MA2	BOLT, WITH WASHER	2	2				
37	60V–11192–00–1S	COVER, CYLINDER HEAD 2	1	1				
38	60V–11193–00	GASKET, HEAD COVER 1	1	1				
39	90119–06MA4	BOLT, WITH WASHER	18	18				
40	68F–83919–00	CLAMP, HARNESS	1	1				
41	99590–10114	PIN, DOWEL	2	2				
42	90119–08MA5	BOLT, WITH WASHER	18	18				
43	90119–08MA8	BOLT, WITH WASHER	2	2				
44	6D0–11181–00	GASKET, CYLINDER HEAD 1	1	1				
45	94702–00404	PLUG, SPARK (NGK BKR7EKU)	6	6				

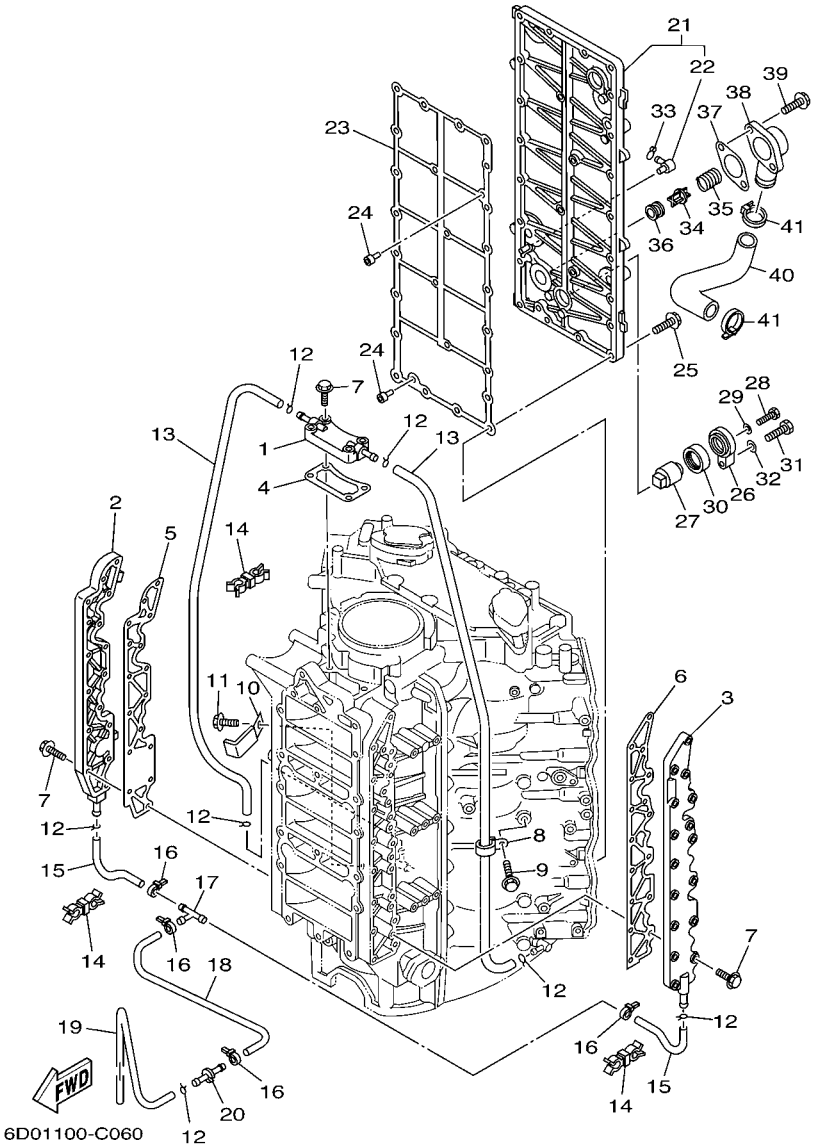

FIG. 6 CYLINDER & CRANKCASE 3

REF. NO.	PART NO.	DESCRIPTION	6D01	6D11				REMARKS
1	6D0–15411–00–1S	COVER, CRANKCASE 1	1	1				
2	6D0–15421–00–1S	COVER, CRANKCASE 2	1	1				
3	6D0–15431–00–1S	COVER, CRANKCASE 3	1	1				
4	6D0–15451–00	GASKET, CRANKCASE COVER 1	1	1				
5	6D0–15461–00	GASKET, CRANKCASE COVER 2	1	1				
6	6D0–15462–00	GASKET, CRANKCASE COVER 3	1	1				
7	90119–06MA3	BOLT, WITH WASHER	36	36				
8	90465–06M88	CLAMP	1	1				
9	97595–06510	BOLT, WITH WASHER	1	1				
10	90465–08M23	CLAMP	1	1				
11	97595–06510	BOLT, WITH WASHER	1	1				
12	90467–08M10	CLIP	7	7				
13	90445–09M30	HOSE (L630)	2	2				
14	90464–07008	CLAMP	3	3				
15	90445–09068	HOSE (L110)	2	2				
16	90465–11M10	CLAMP	4	4				
17	688–24378–00	PIPE, JOINT 4	1	1				
18	90445–09221	HOSE (L205)	1	1				
19	90445–09022	HOSE	1	1				
20	8H8–24376–00	PIPE, JOINT 1	1	1				
21	60V–41113–00–94	OUTER COVER, EXHAUST	1	1				
22	676–11372–00	.NIPPLE, HOSE	1	1				
23	60V–41112–00	GASKET, EXHAUST INNER COVER	1	1				
24	60V–41267–00	BUSHING, JOINT	2	2				
25	90119–06MA3	BOLT, WITH WASHER	25	25				
26	60V–11327–00–94	COVER, ANODE	1	1				
27	67F–11325–00	ANODE	1	1				

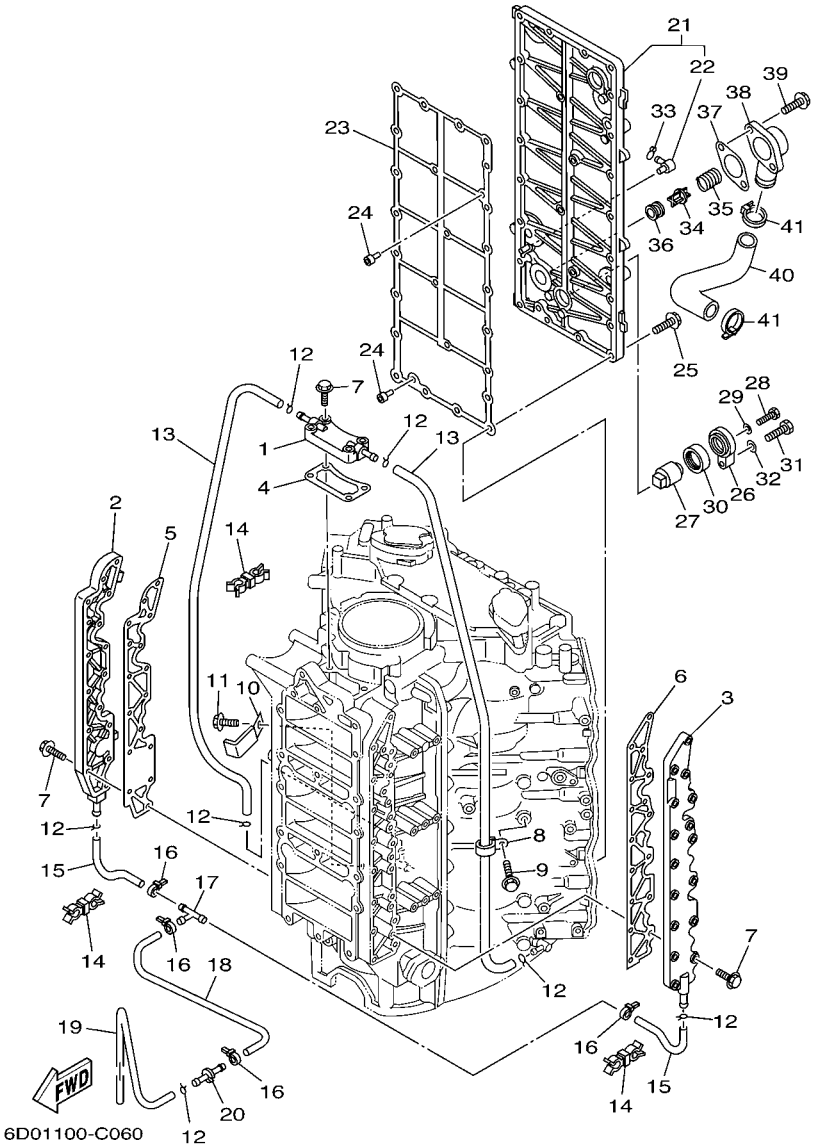

FIG. 6 CYLINDER & CRANKCASE 3

REF. NO.	PART NO.	DESCRIPTION	6D01	6D11				REMARKS
28	97075–06020	BOLT	1	1				
29	92995–06600	WASHER	1	1				
30	67F–11328–00	GROMMET, ANODE	1	1				
31	97075–08030	BOLT	1	1				
32	92995–08600	WASHER	1	1				
33	90467–08004	CLIP	1	1				
34	6G5–12416–00	VALVE, PRESSURE CONTROL	1	1				
35	90501–16M11	SPRING, COMPRESSION	1	1				
36	90480–20M05	GROMMET	1	1				
37	60V–11382–A0	GASKET 2	1	1				
38	6G5–11372–00–1S	COVER, BYPASS 2	1	1				
39	90119–06MA2	BOLT, WITH WASHER	2	2				
40	61A–12576–00	HOSE 1	1	1				
41	90465–13M18	CLAMP	2	2				

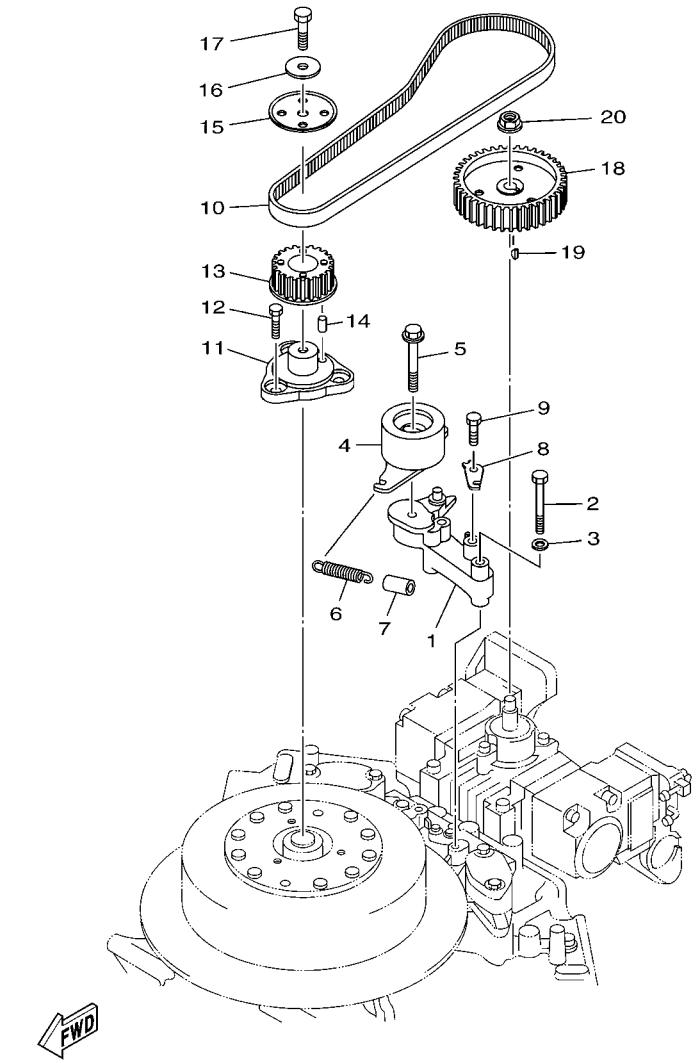

60V2100-C060

FIG. 7 FUEL PUMP DRIVE GEAR

REF. NO.	PART NO.	DESCRIPTION	6D01	6D11				REMARKS
1	60V–11598–00–94	BRACKET, TENSIONER	1	1				
2	97013–08055	BOLT	2	2				
3	92903–08600	WASHER, PLATE	2	2				
4	60V–11590–00	TENSIONER ASSY	1	1				
5	90119–10M72	BOLT, WITH WASHER	1	1				
6	6D0–12113–00	SPRING, VALVE INNER	1	1				
7	90445–15002	HOSE	1	1				
8	60V–11595–00	PLATE,VALVE	1	1				
9	97013–08012	BOLT	1	1				
10	60V–46241–00	V-BELT	1	1				
11	68F–11579–01–94	COUPLING, FLYWHEEL	1	1				
12	97013–08012	BOLT	3	3				
13	68F–11536–00–94	GEAR, DRIVE	1	1				
14	93605–10108	PIN, DOWEL	1	1				
15	60V–11557–00	WASHER 1	1	1				
16	90201–08M00	WASHER, PLATE	1	1				
17	97095–08025	BOLT	1	1				
18	68F–11537–00–94	GEAR, DRIVEN	1	1				
19	90280–03M01	KEY, WOODRUFF	1	1				
20	95707–08600	NUT, FLANGE	1	1				

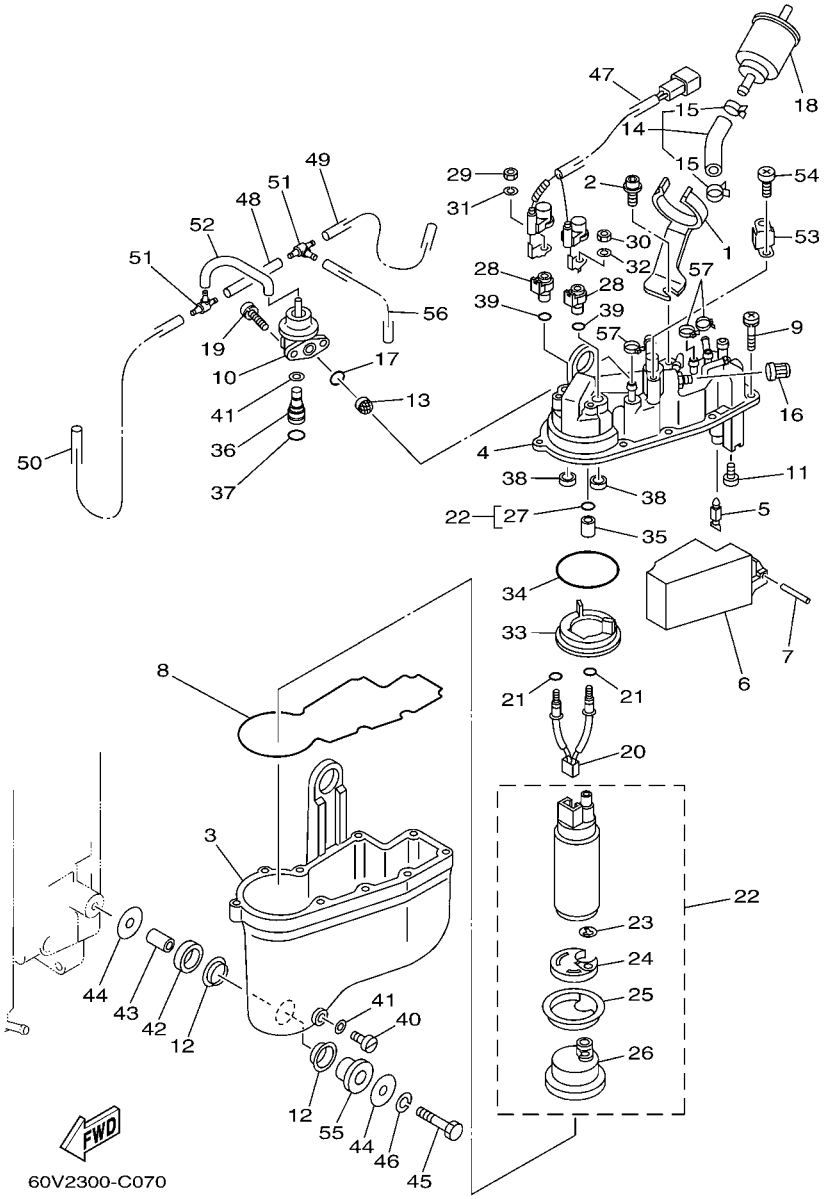

FIG. 8 VAPOR SEPARATOR 1

REF. NO.	PART NO.	DESCRIPTION	6D01	6D11				REMARKS
1	60V–24216–00	STAY	1	1				
2	6D0–24473–00	SCREW	1	1				
3	60V–14980–00	BODY, FLOAT CHAMBER	1	1				
4	60V–14182–01	COVER, FLOAT CHAMBER	1	1				
5	65L–14546–00	VALVE, NEEDLE	1	1				
6	66K–14985–00	FLOAT	1	1				
7	66K–14548–01	PIN, FLOAT ARM	1	1				
8	66K–14984–00	GASKET, FLOAT CHAMBER	1	1				
9	65L–14125–00	SCREW	10	10				
10	68F–13906–00	REGULATOR, PRESSURE	1	1				
11	66K–14325–01	SCREW, PAN HEAD	2	2				
12	60V–14163–00	SPACER	6	6				
13	65L–13905–00	FILTER COMP	1	1				
14	68F–13971–00	PIPE, FUEL 1	1	1				
15	65L–24387–00	.CLIP	2	2				
16	65L–14966–00	CAP	1	1				
17	65L–24486–00	O-RING	1	1				
18	60V–24251–00	STRAINER 1	1	1				
19	66K–14245–00	SCREW, GUIDE	2	2				
20	68F–82509–00	WIRE, SUB LEAD	1	1				
21	65L–14227–00	O-RING	2	2				
22	60V–13907–00	FUEL PUMP COMP.	1	1				
23	65L–14159–00	.CLIP	1	1				
24	68F–13781–00	.DAMPER, PUMP	1	1				
25	68F–13844–00	.PLATE 2	1	1				
26	68F–13915–00	.FILTER	1	1				
27	65L–1416A–00	.O-RING	1	1				

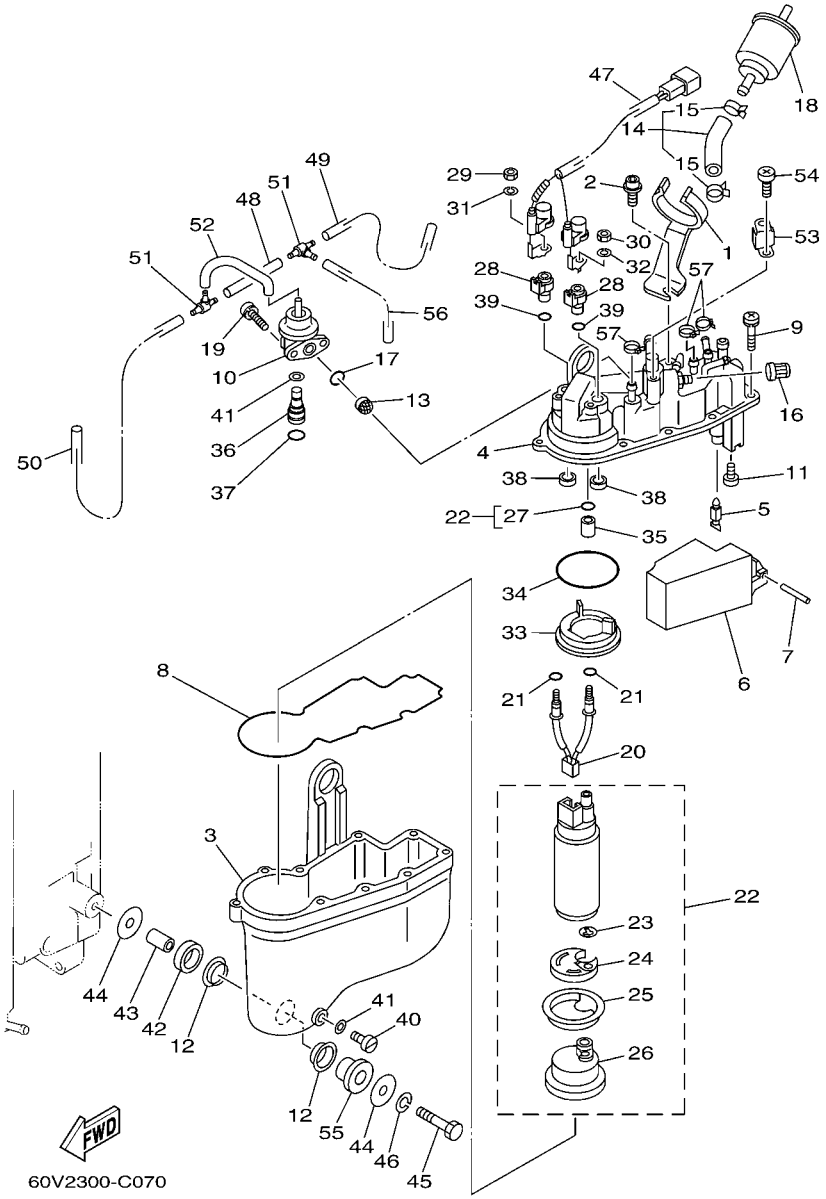

FIG. 8 VAPOR SEPARATOR 1

REF. NO.	PART NO.	DESCRIPTION	6D01	6D11				REMARKS
28	66K–14271–00	INSULATOR	2	2				
29	65L–8182A–00	NUT	1	1				
30	65L–8182K–00	NUT	1	1				
31	65L–8182E–00	WASHER	1	1				
32	65L–8182F–00	WASHER	1	1				
33	68F–13843–00	PLATE 1	1	1				
34	65L–14147–00	O-RING	1	1				
35	68F–14274–00	CONNECTOR	1	1				
36	66K–24376–00	PIPE, JOINT 1	1	1				
37	66K–24489–00	O-RING	1	1				
38	68F–14271–00	INSULATOR	2	2				
39	65L–14397–00	O-RING	2	2				
40	65L–14992–00	ROD	1	1				
41	65L–14997–00	SEAL	2	2				
42	60V–24375–01	GROMMET	3	3				
43	60V–24397–01	COLLAR	3	3				
44	66K–24579–00	WASHER 2	6	6				
45	65L–24592–00	BOLT	3	3				
46	65L–24169–00	WASHER, LOCK	3	3				
47	60V–82507–00	WIRE, LEAD	1	1				
48	66K–13542–00	HOSE, VACUUM SENSING 1	1	1				
49	66K–13544–00	HOSE, VACUUM SENSING 2	1	1				
50	66K–13532–00	HOSE, VACUUM SENSING 3	1	1				
51	65L–24461–00	PIPE, JOINT	2	2				
52	66K–13533–00	HOSE, VACUUM SENSING 4	1	1				
53	65L–13898–00	HOLDER	1	1				
54	65L–14565–00	SCREW	1	1				

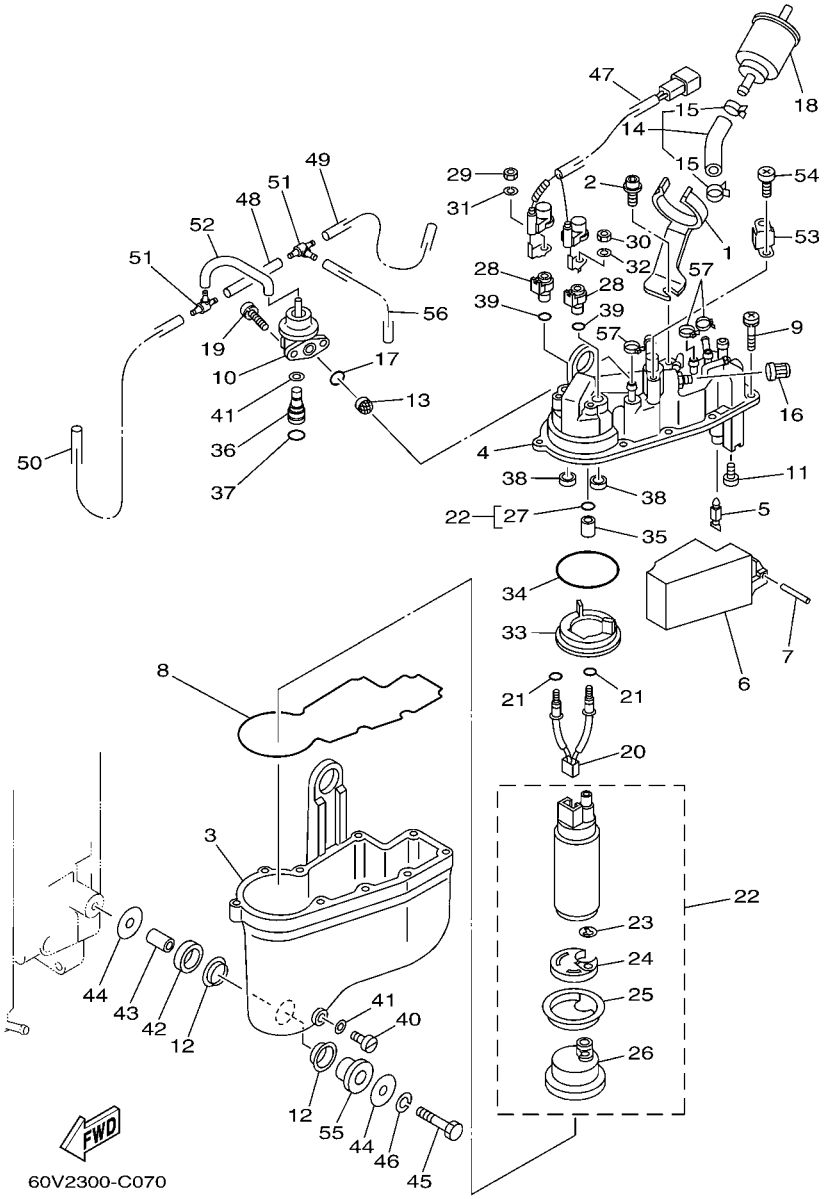

FIG. 8 VAPOR SEPARATOR 1

REF. NO.	PART NO.	DESCRIPTION	6D01	6D11				REMARKS
55	60V–24339–01	GROMMET	3	3				
56	60V–13534–00	HOSE, VACUUM SENSING 5	1	1				
57	90465–11M10	CLAMP	3	3				

FIG. 9 VAPOR SEPARATOR 2

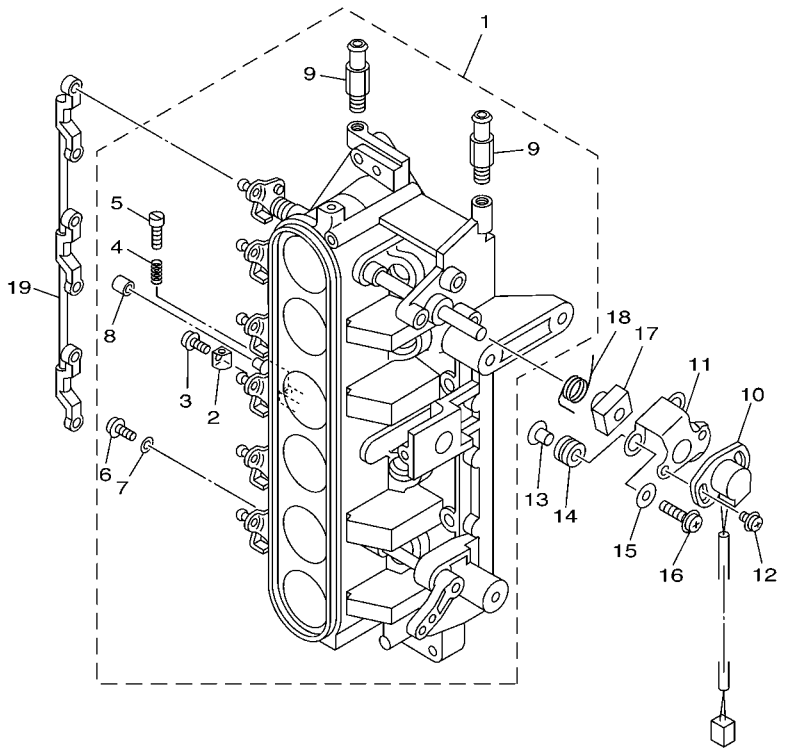

REF. NO.	PART NO.	DESCRIPTION	6D01	6D11				REMARKS
1	6D0–13751–00	BODY, THROTTLE 1	1	1				
2	65L–14527–00	.PLATE	1	1				
3	65L–14565–00	.SCREW	1	1				
4	65L–14334–00	.SPRING, AIR ADJUSTING	1	1				
5	65L–14523–00	.SCREW, STOP	1	1				
6	6K5–14592–00	.SCREW	6	6				
7	90201–05552	.WASHER, PLATE	6	6				
8	65L–14578–00	.COLLAR	1	1				
9	68F–13568–00	.STUD	2	2				
10	61A–85885–00	THROTTLE SENSOR ASSY	1	1				
11	6K7–85886–01	BRACKET	1	1				
12	97985–05212	SCREW, WITH WASHER	2	2				
13	90387–05M00	COLLAR	3	3				
14	60V–85516–00	SPACER	3	3				
15	60V–14596–00	WASHER	3	3				
16	97985–05330	SCREW, WITH WASHER	3	3				
17	65L–14573–00	LEVER	1	1				
18	65L–14579–00	SPRING	1	1				
19	65L–41217–00	ROD, ACCEL. LEVER	1	1				

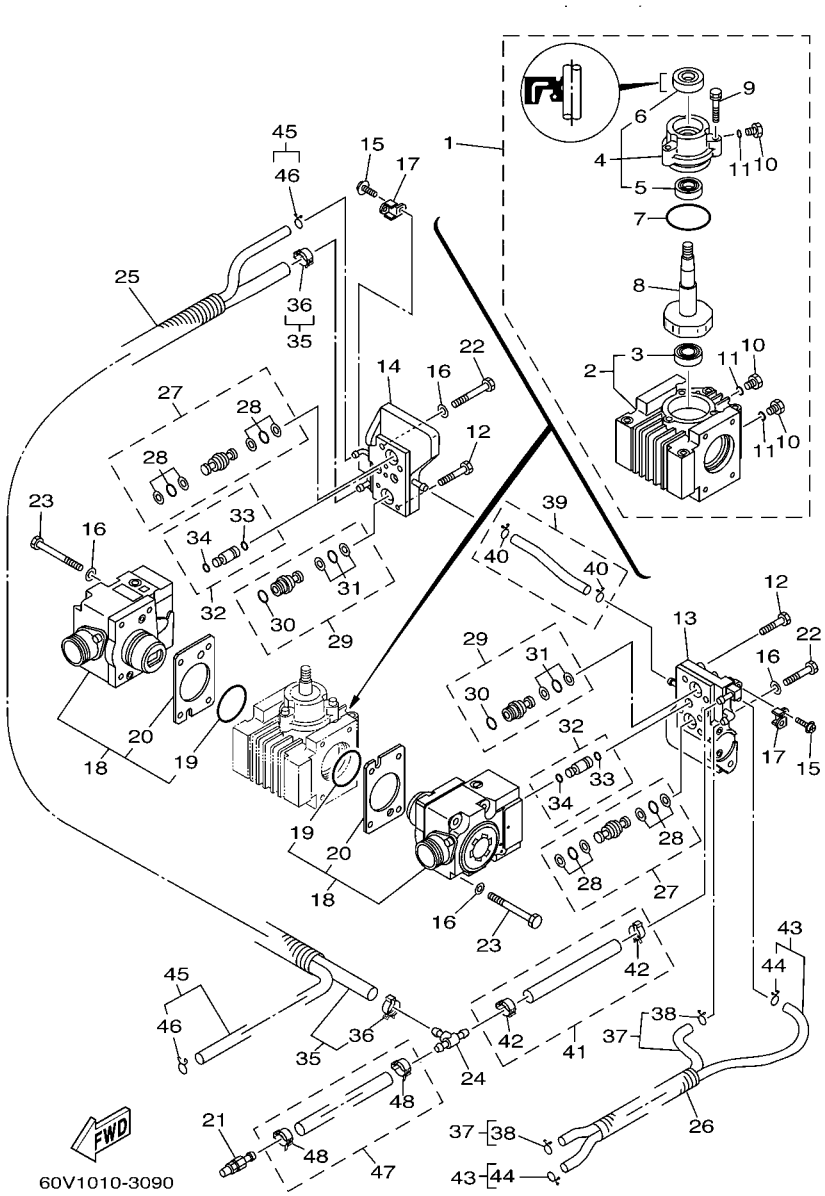

FIG. 10 FUEL INJECTION PUMP

REF. NO.	PART NO.	DESCRIPTION	6D01	6D11				REMARKS
1	60V–12170–00	CAMSHAFT ASSY 1	1	1				
2	60V–12424–00	.PLATE, CARTRIDGE INNER	1	1				
3	93306–00001	..BEARING	1	1				
4	68F–12173–00	.CAP, CAMSHAFT 1	1	1				
5	93306–001U0	..BEARING	1	1				
6	68F–12223–00	..SEAL	1	1				
7	68F–12439–00	.O-RING	1	1				
8	60V–12171–00	.CAMSHAFT 1	1	1				
9	68F–12228–00	.BOLT	3	3				
10	68F–13455–00	.PLUG	3	3				
11	68F–13473–00	.O-RING	3	3				
12	68F–12228–00	BOLT	4	4				
13	60V–13993–00	COVER, CONTROL RACK	1	1				
14	60W–13993–00	COVER, CONTROL RACK	1	1				
15	65L–14565–00	SCREW	2	2				
16	68F–24579–00	WASHER 2	12	12				
17	60V–13854–00	PLATE 4	2	2				
18	60V–13910–00	FUEL PUMP ASSY	2	2				
19	60V–14005–00	.RING, SEAL	1	1				
20	60V–14126–00	.GASKET	1	1				
21	68F–24300–00	FUEL PIPE JOINT	1	1				
22	60V–24178–00	BOLT 3	4	4				
23	60V–24176–00	BOLT 1	8	8				
24	60V–24378–00	PIPE, JOINT 4	1	1				
25	60V–24864–00	TUBE	1	1				
26	60V–2510T–00	TUBE	1	1				
27	68F–13815–00	JOINT 1	2	2				

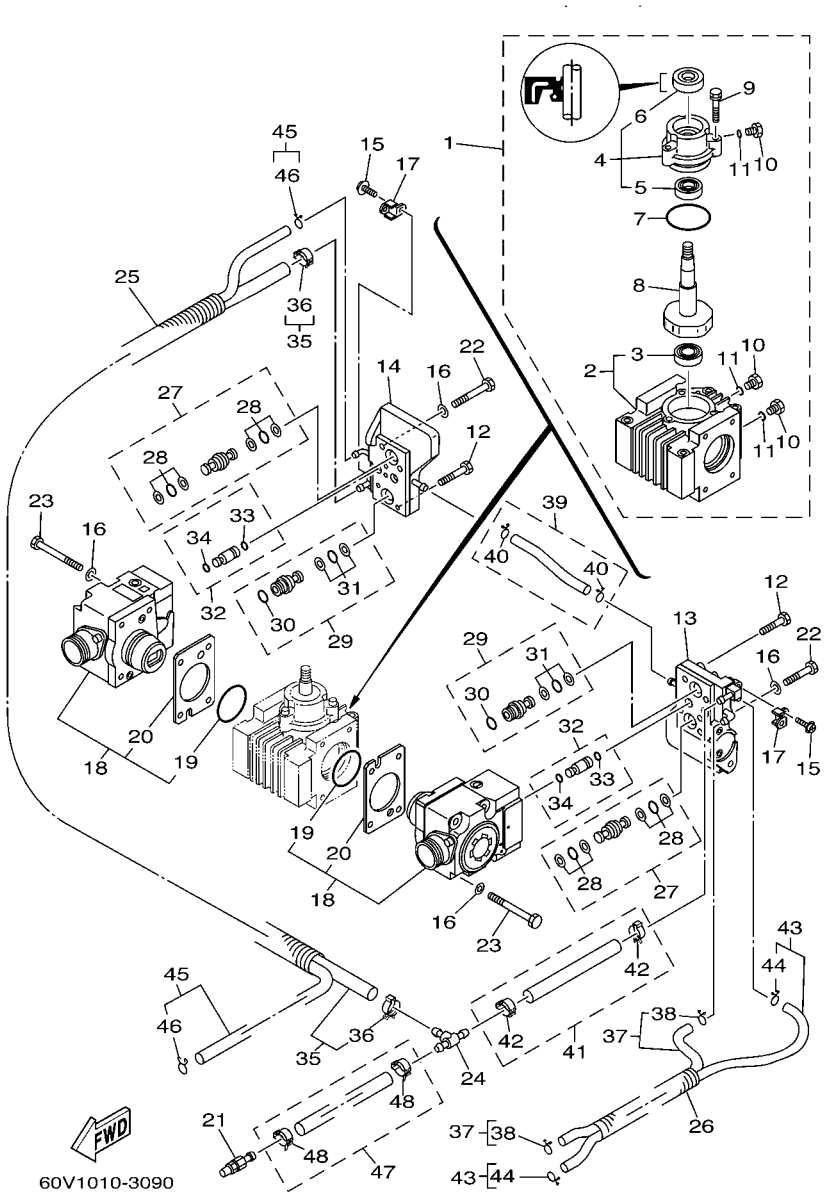

FIG. 10 FUEL INJECTION PUMP

REF. NO.	PART NO.	DESCRIPTION	6D01	6D11				REMARKS
28	68F–2466A–00	.PACKING KIT	2	2				
29	60V–13816–00	JOINT 2	2	2				
30	68F–24486–00	.O-RING	1	1				
31	68F–2466A–00	.PACKING KIT	1	1				
32	60V–13505–00	JOINT, PUMP	4	4				
33	68F–13473–00	.O-RING	1	1				
34	60V–13473–00	.O-RING	1	1				
35	60V–14148–00	PIPE	1	1				
36	65L–24387–00	.CLIP	2	2				
37	60V–24312–00	PIPE 2	1	1				
38	68F–24356–00	.CLIP, PIPE 1	2	2				
39	60V–24313–00	PIPE 3	1	1				
40	68F–24356–00	.CLIP, PIPE 1	2	2				
41	60V–14149–00	PIPE	1	1				
42	65L–24387–00	.CLIP	2	2				
43	60V–24314–00	PIPE 4	1	1				
44	68F–24356–00	.CLIP, PIPE 1	2	2				
45	60V–24315–00	PIPE 5	1	1				
46	68F–24356–00	.CLIP, PIPE 1	2	2				
47	60V–13972–00	PIPE, FUEL 2	1	1				
48	65L–24387–00	.CLIP	2	2				

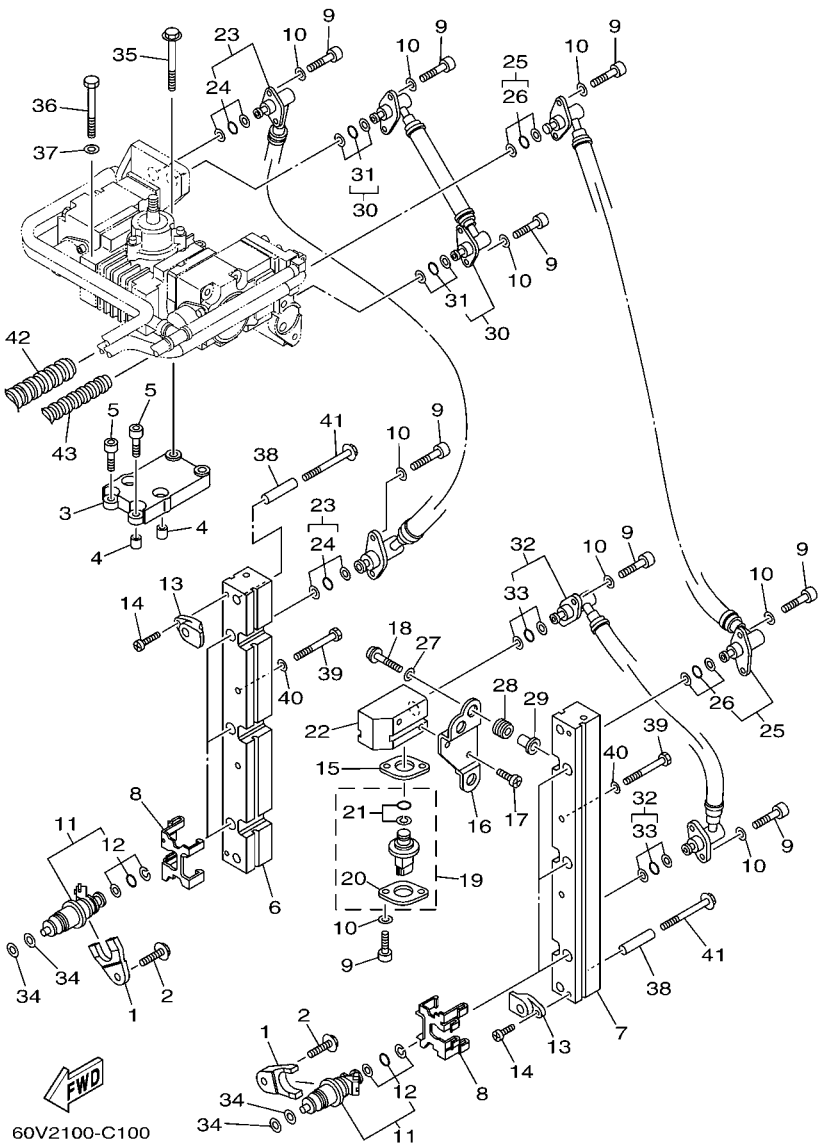

FIG. 11 FUEL INJECTION NOZZLE

REF. NO.	PART NO.	DESCRIPTION	6D01	6D11				REMARKS
1	68F–13767–00	CAP, INJECTOR	6	6				
2	90119–08M60	BOLT, WITH WASHER	6	6				
3	60V–13782–00	STAY	1	1				
4	90387–08M31	COLLAR	2	2				
5	90110–08M04	BOLT, HEXAGON SOCKET HEAD	4	4				
6	60V–13161–00	PIPE, DELIVERY 1	1	1				
7	60V–13171–00	PIPE, DELIVERY 2	1	1				
8	60V–13898–00	HOLDER	6	6				
9	68F–24551–00	BOLT, JOINT	18	18				
10	68F–24576–00	WASHER	18	18				
11	60V–13761–00	INJECTOR ASSY	6	6				
12	68F–1410B–00	.PACKING KIT	1	1				
13	60V–14264–00	COLLAR	4	4				
14	65L–14565–00	SCREW	4	4				
15	60V–82389–00	PLATE 2	1	1				
16	60V–82398–00	PLATE 3	1	1				
17	60V–81545–00	SCREW 1	2	2				
18	60V–81546–00	SCREW 2	3	3				
19	60V–82380–00	SENSOR, PRESSURE	1	1				
20	68F–82388–00	.PLATE	1	1				
21	68F–82384–00	.PACKING KIT	1	1				
22	60V–13938–00	PIPE	1	1				
23	60V–13973–00	PIPE, FUEL 3	1	1				
24	68F–2466A–00	.PACKING KIT	2	2				
25	60V–13974–00	PIPE, FUEL 4	1	1				
26	68F–2466A–00	.PACKING KIT	2	2				
27	65L–14596–00	WASHER	3	3				

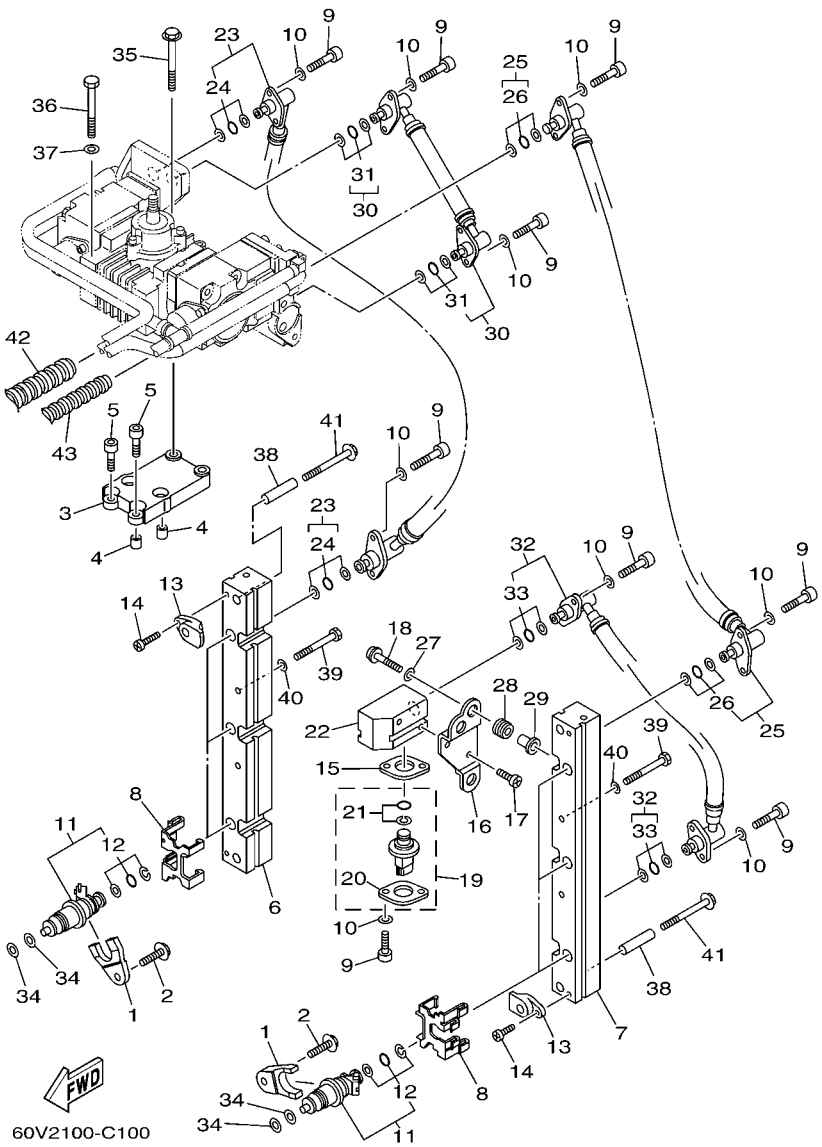

FIG. 11 FUEL INJECTION NOZZLE

REF. NO.	PART NO.	DESCRIPTION	6D01	6D11				REMARKS
28	90480–10M23	GROMMET	3	3				
29	90387–05M00	COLLAR	3	3				
30	60V–13975–00	PIPE, FUEL 5	1	1				
31	68F–2466A–00	.PACKING KIT	2	2				
32	60V–13976–00	PIPE, FUEL 6	1	1				
33	68F–2466A–00	.PACKING KIT	2	2				
34	68F–13764–00	GASKET (T=2.2)	12	12				
35	97513–08570	BOLT, WITH WASHER	2	2				
36	97013–08090	BOLT	2	2				
37	92903–08600	WASHER, PLATE	2	2				
38	60V–13716–00	COLLAR	4	4				
39	97013–08055	BOLT	4	4				
40	92903–08600	WASHER, PLATE	4	4				
41	97513–08570	BOLT, WITH WASHER	4	4				
42	90447–22004	HOSE, WITH SPRING	1	1				
43	90447–15001	HOSE, WITH SPRING	1	1				

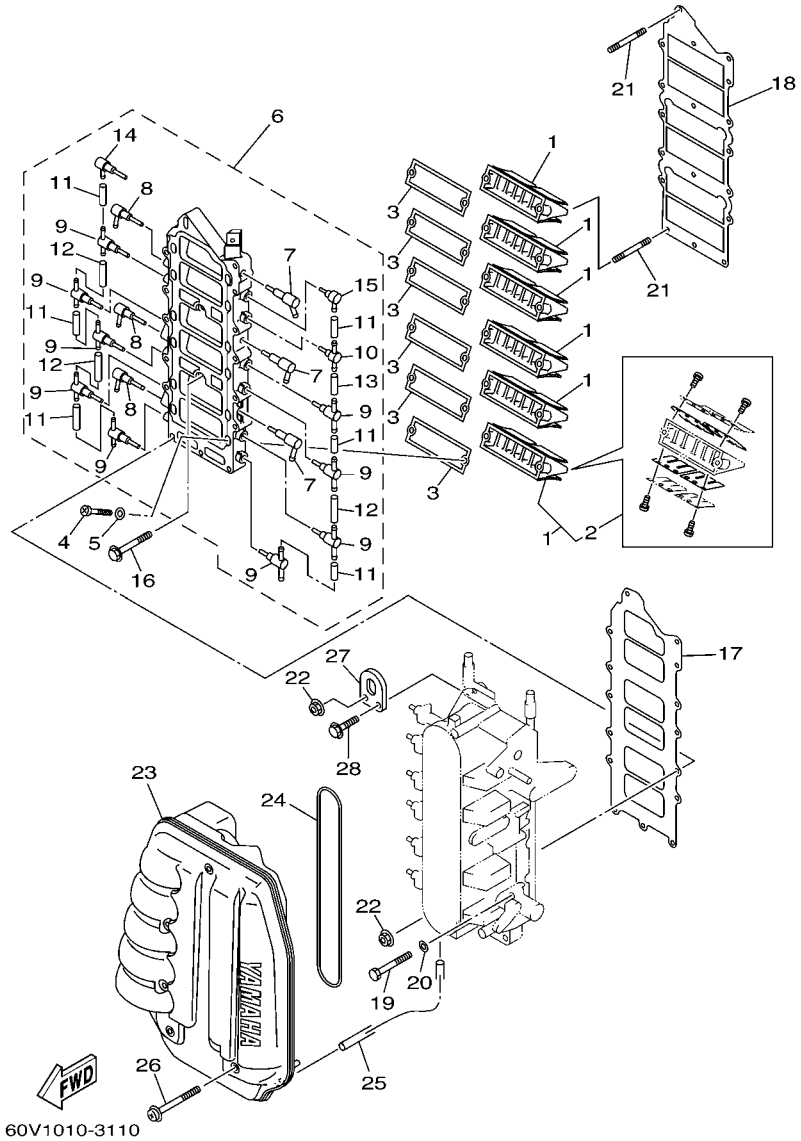

FIG. 12 INTAKE

REF. NO.	PART NO.	DESCRIPTION	6D01	6D11				REMARKS
1	6D0–13610–00	REED VALVE ASSY	6	6				
2	60V–W0004–00	.REED SET	1	1				
3	60V–13621–A0	GASKET, VALVE SEAT	6	6				
4	97880–05016	SCREW, PAN HEAD	12	12				
5	92990–05600	WASHER, PLATE	12	12				
6	60V–13624–00–1S	PLATE,REED VALVE	1	1				
7	60V–13552–00	.NOZZLE	3	3				
8	60V–13572–00	.NOZZLE	3	3				
9	60V–11379–00	.VALVE, CHECK	9	9				
10	6F6–11370–01	.CHECK VALVE ASSY	1	1				
11	90445–07M03	.HOSE (L34)	6	6				
12	90445–07016	.HOSE (L60)	3	3				
13	90445–07015	.HOSE (L65)	1	1				
14	60V–11369–00	.VALVE, CHECK	1	1				
15	650–11370–01	.CHECK VALVE ASSY	1	1				
16	90105–06028	BOLT, FLANGE	2	2				
17	60V–13646–00	GASKET, MANIFOLD 2	1	1				
18	60V–13645–00	GASKET, MANIFOLD 1	1	1				
19	97013–06060	BOLT	12	12				
20	92903–06600	WASHER, PLATE	12	12				
21	95670–06660	BOLT, STUD	2	2				
22	90179–06M24	NUT	2	2				
23	60V–14440–00	SILENCER ASSY, INTAKE	1	1				
24	60V–14476–00	SEAL	1	1				
25	90445–07M44	HOSE (L250)	1	1				
26	90159–06M16	SCREW, WITH WASHER	6	6				
27	68F–11119–00	HANGER, ENGINE	1	1				

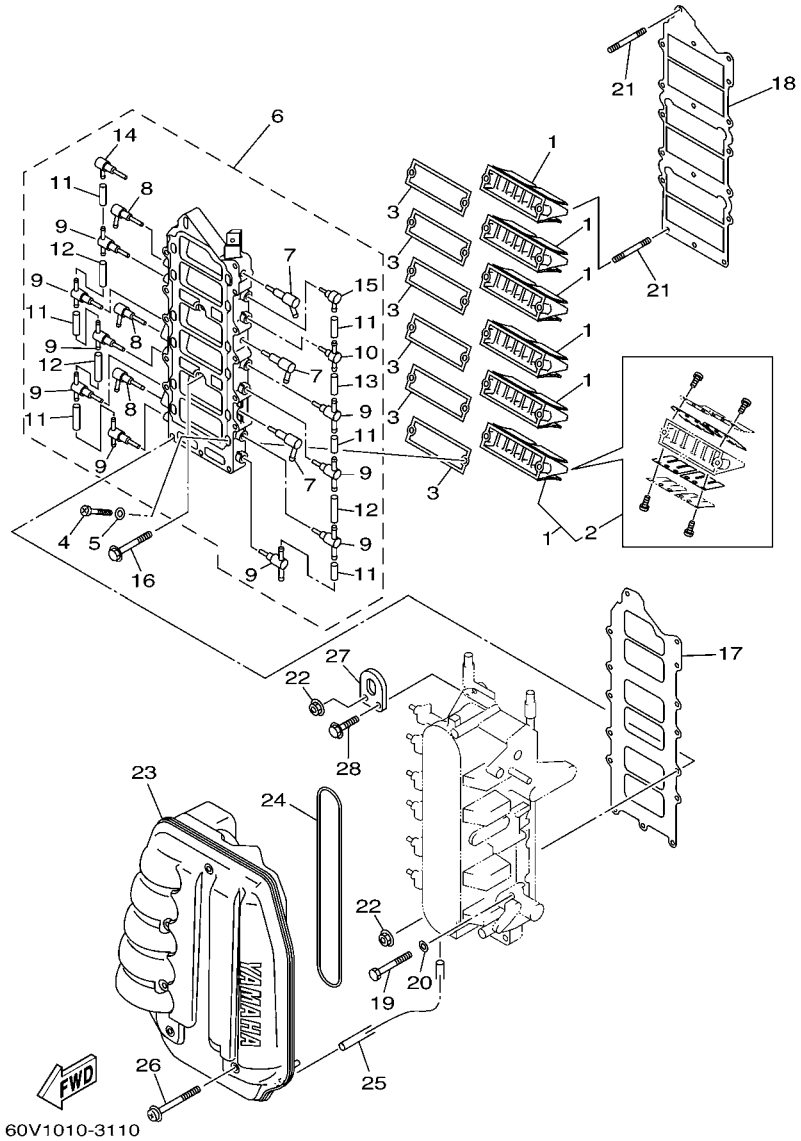

FIG. 12 INTAKE

REF. NO.	PART NO.	DESCRIPTION	6D01	6D11				REMARKS
28	90119–06MA2	BOLT, WITH WASHER	1	1				

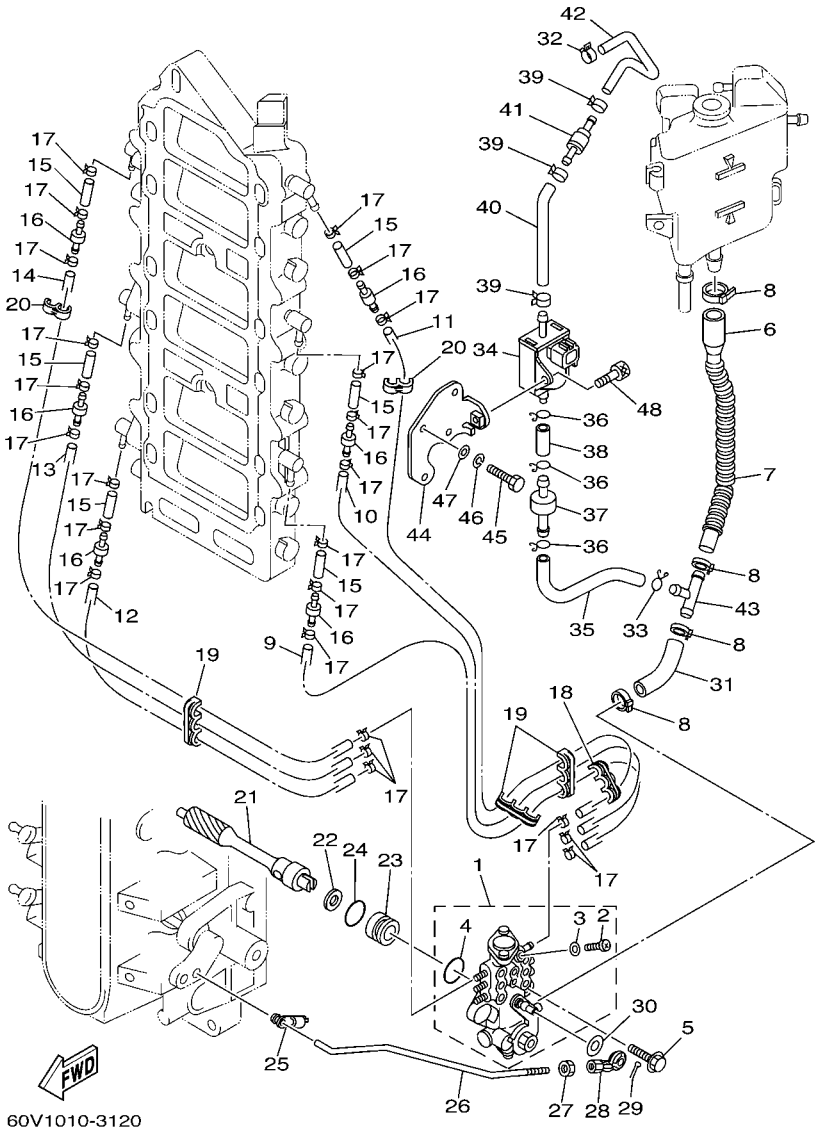

FIG. 13 OIL PUMP

REF. NO.	PART NO.	DESCRIPTION	6D01	6D11				REMARKS
1	6D0–13200–00	OIL INJECTION PUMP ASSY	1	1				
2	6R3–13471–00	.PLUG, DRAIN	1	1				
3	6L2–13475–00	.GASKET	1	1				
4	93210–19M82	.O-RING	1	1				
5	90109–06M40	BOLT	2	2				
6	6G5–13416–00	PIPE, OIL 1	1	1				
7	90446–17MA8	HOSE (L200)	1	1				
8	90465–11M10	CLAMP	4	4				
9	90446–07M35	HOSE (L260)	1	1				
10	90445–07M96	HOSE (L310)	1	1				
11	90446–07M48	HOSE (L450)	1	1				
12	90445–07M44	HOSE (L250)	1	1				
13	90445–07M46	HOSE (L360)	1	1				
14	90445–07M10	HOSE (L510)	1	1				
15	90445–07M04	HOSE (L50)	6	6				
16	6R3–13183–00	VALVE, CHECK	6	6				
17	90468–07M02	CLIP	24	24				
18	90464–07M05	CLAMP	1	1				
19	90464–07M05	CLAMP	3	3				
20	90464–07M20	CLAMP	2	2				
21	61A–11537–00	GEAR, DRIVEN	1	1				
22	90201–09M01	WASHER, PLATE	1	1				
23	61A–13117–00	COLLAR, DISTANCE	1	1				
24	93210–18MA9	O-RING	1	1				
25	6R5–41237–00	JOINT, LINK	1	1				
26	65L–41241–10	ROD, LINK	1	1				
27	95380–05600	NUT	1	1				

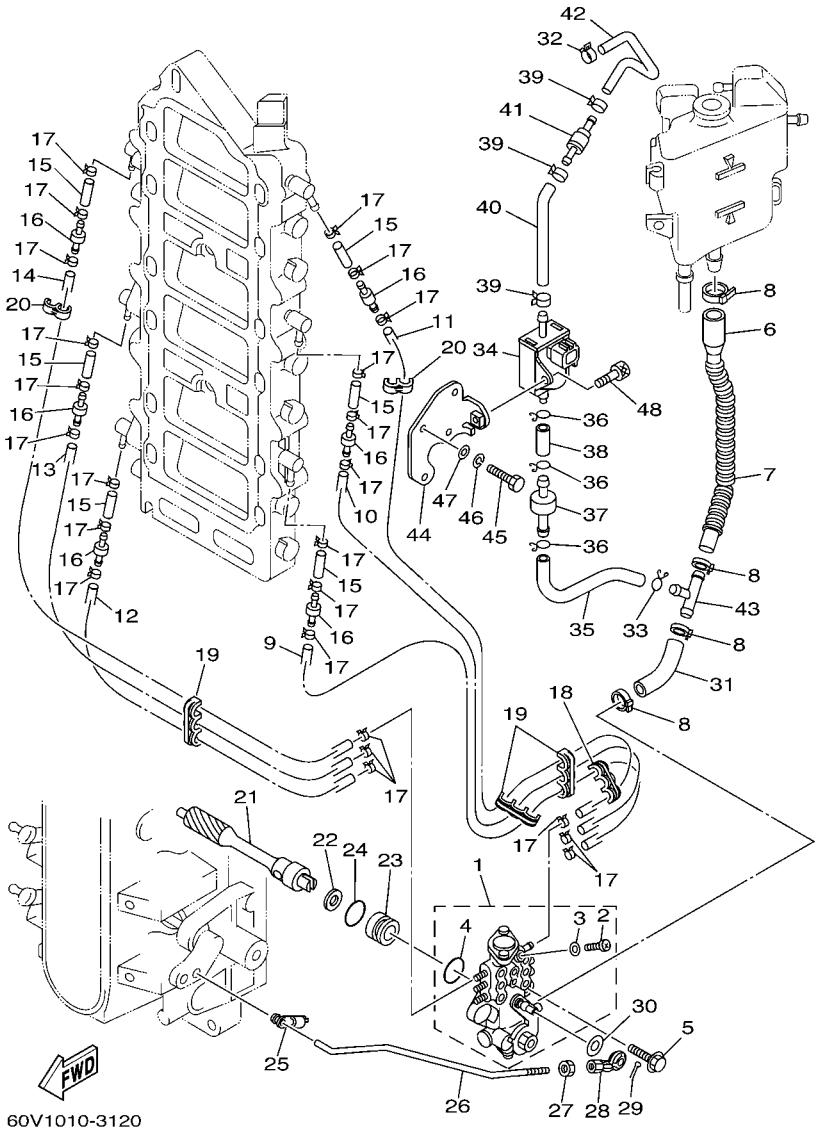

FIG. 13 OIL PUMP

REF. NO.	PART NO.	DESCRIPTION	6D01	6D11				REMARKS
28	6H1–41237–00	JOINT, LINK	1	1				
29	91490–12012	PIN, COTTER	1	1				
30	90202–05088	WASHER, PLATE	1	1				
31	60V–24319–00	PIPE, OIL	1	1				
32	90468–07M02	CLIP	1	1				
33	90467–08M18	CLIP	1	1				
34	68F–13100–00	SOLENOID PUMP ASSY	1	1				
35	68F–13418–00	HOSE 4	1	1				
36	68F–13184–00	SPRING, OIL PIPE	3	3				
37	68F–13440–00	FILTER ASSY	1	1				
38	68F–1316F–00	HOSE 1	1	1				
39	68F–13133–00	CLIP	3	3				
40	68F–1316G–00	HOSE 2	1	1				
41	68F–1316A–00	CHECK VALVE ASSY	1	1				
42	68F–13416–00	HOSE 3	1	1				
43	68F–14485–00	PIPE, JOINT	1	1				
44	60V–1319K–00	PLATE	1	1				
45	97095–06020	BOLT	2	2				
46	92995–06100	WASHER, SPRING	2	2				
47	92995–06600	WASHER	2	2				
48	90110–06M06	BOLT, HEXAGON SOCKET HEAD	1	1				

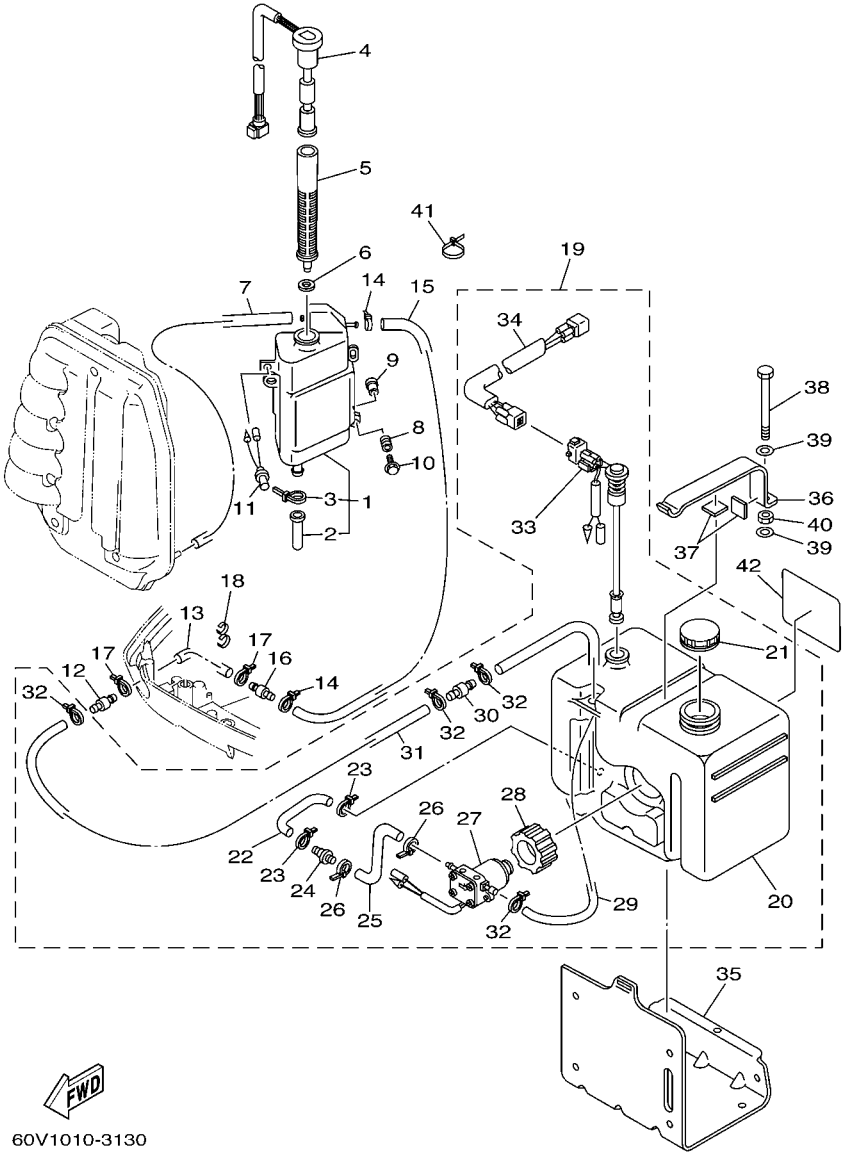

FIG. 14 OIL TANK

REF. NO.	PART NO.	DESCRIPTION	6D01	6D11				REMARKS
1	61A–21750–00	OIL TANK ASSY	1	1				
2	6E5–13448–00	.CAP	1	1				
3	90465–13M11	.CLAMP	1	1				
4	61A–85730–01	OIL LEVEL GAUGE ASSY	1	1				
5	61A–13411–00	STRAINER, OIL	1	1				
6	6E5–13414–00	GASKET, STRAINER COVER	1	1				
7	90445–05M07	HOSE (L700)	1	1				
8	6A0–82317–00	DAMPER, IGNITION COIL	3	3				
9	624–42542–00	PIPE	3	3				
10	90119–06M65	BOLT, WITH WASHER	3	3				
11	6R3–8259E–00	SWITCH ASSY	1	1				
12	6E5–24379–00	PIPE, JOINT 4	1	1				
13	90445–12M04	HOSE (L1900)	1	1				
14	90465–11M10	CLAMP	2	2				
15	6E5–24323–00	PIPE 12	1	1				
16	6E5–24379–00	PIPE, JOINT 4	1	1				
17	90465–11M10	CLAMP	2	2				
18	90464–13M34	CLAMP	1	1				
19	61A–21708–20	SUB OIL TANK ASSY	1	1				FOR OCE
20	6E5–21733–20	.SUB TANK, OIL (10.5L)	1	1				
21	6E5–21770–03	.OIL TANK CAP ASSY	1	1				
22	6E5–24322–00	.PIPE 11	1	1				
23	90465–11M10	.CLAMP	2	2				
24	646–24251–02	.STRAINER 1	1	1				
25	6E5–24319–01	.PIPE, OIL	1	1				
26	90465–11M10	.CLAMP	2	2				
27	6E5–81900–01	.OIL FEED PUMP ASSY	1	1				

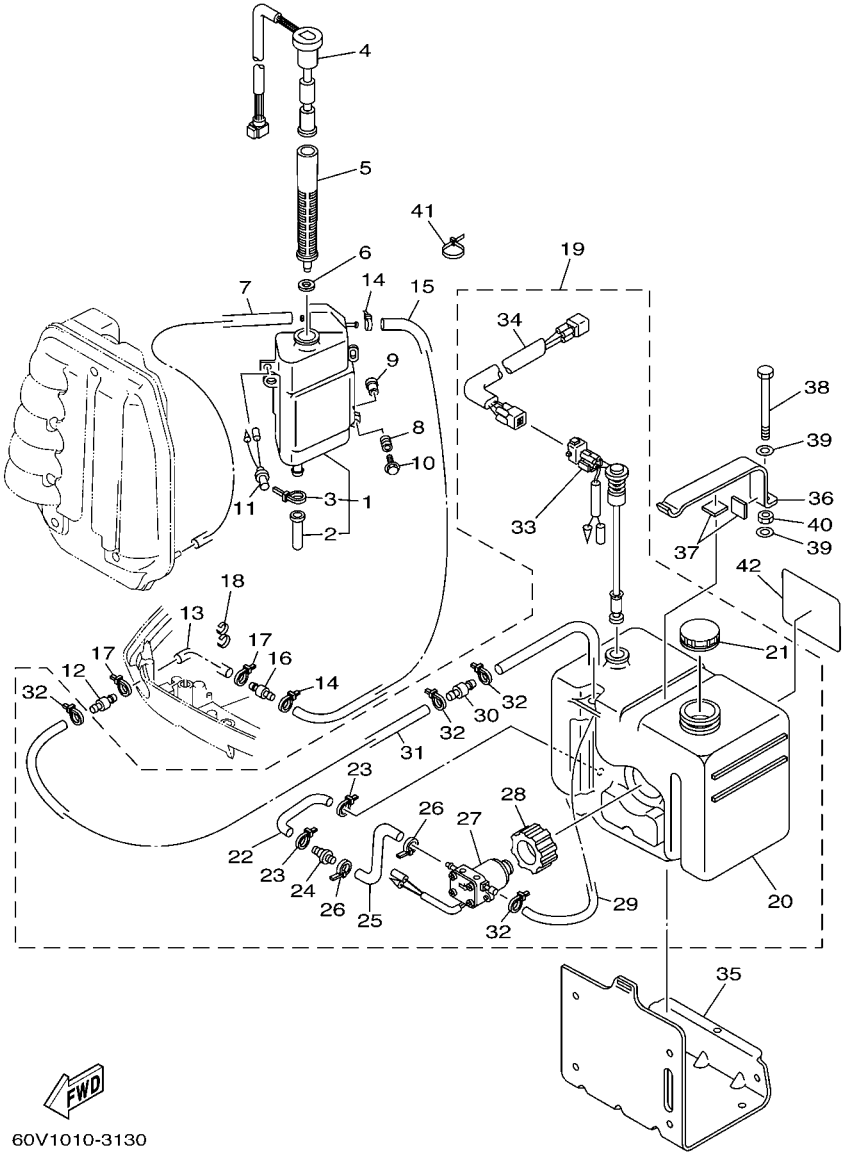

FIG. 14 OIL TANK

REF. NO.	PART NO.	DESCRIPTION	6D01	6D11				REMARKS
28	6E5–81922–00	.GROMMET	1	1				
29	6E5–24321–01	.PIPE 10	1	1				
30	6E5–24379–00	.PIPE, JOINT 4	1	1				
31	90445–11M26	.HOSE (L6500)	1	1				
32	90465–11M10	.CLAMP	4	4				
33	6E5–85720–05	.OIL LEVEL GAUGE ASSY	1	1				
34	6R3–85721–80	.WIRE, LEAD (8M)	1	1				
35	6E5–21734–01–33	HOLDER, OIL SUB TANK	1	1				FOR OCE
36	6E5–21798–01–33	BRACKET, DAMPER	1	1				FOR OCE
37	6E5–21746–00	DAMPER	2	2				FOR OCE
38	97080–06100	BOLT	1	1				FOR OCE
39	92990–06600	WASHER, PLATE	2	2				FOR OCE
40	95380–06600	NUT, HEXAGON	1	1				FOR OCE
41	90465–13M11	CLAMP	2	2				FOR OCE
42	6E5–13437–43	MARK, CAUTION	1	1				FOR OCE

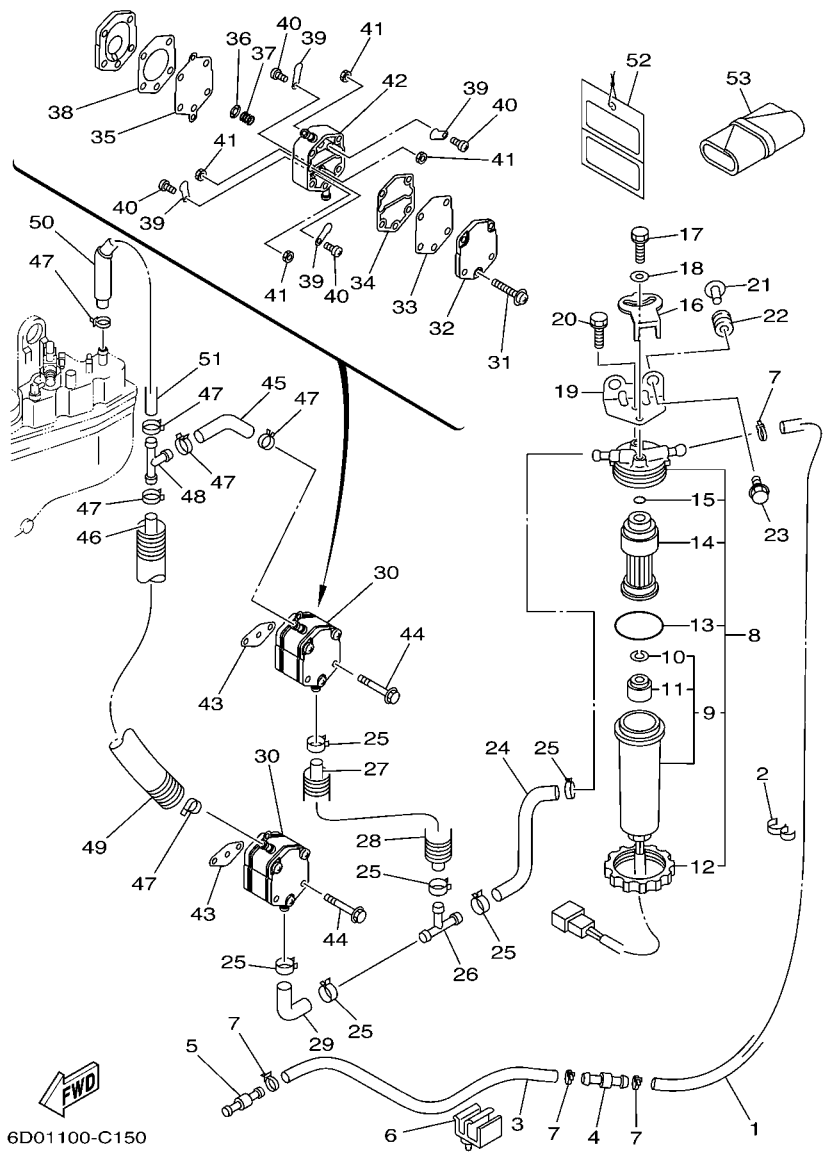

FIG. 15 FUEL 1

REF. NO.	PART NO.	DESCRIPTION	6D01	6D11				REMARKS
1	61A–24313–00	PIPE 3	1	1				
2	90464–13M34	CLAMP	1	1				
3	90445–13M17	HOSE (L2700)	1	1				
4	6R3–24377–00	PIPE, JOINT 3	1	1				
5	6R3–24377–10	PIPE, JOINT 3	1	1				
6	6E5–82594–00	CLAMP	1	1				
7	90465–11M10	CLAMP	4	4				
8	68F–24560–10	FILTER ASSY	1	1				
9	68F–24562–10	.CUP, FILTER	1	1				
10	68F–24519–10	..CLIP	1	1				
11	68F–24469–10	..FLOAT, WATER LEVEL	1	1				
12	65L–24531–01	.NUT	1	1				
13	61A–24564–00	.O-RING	1	1				
14	68F–24563–10	.ELEMENT, FILTER	1	1				
15	65L–24564–00	.O-RING	1	1				
16	60H–24558–00	HOLDER, FILTER	1	1				
17	97595–06416	BOLT, WITH WASHER	1	1				
18	90201–06068	WASHER, PLATE	1	1				
19	68F–24566–00	BRACKET, FILTER	1	1				
20	97595–06514	BOLT, WITH WASHER	1	1				
21	90387–06M60	COLLAR	2	2				
22	90480–10M23	GROMMET	2	2				
23	90119–06M88	BOLT, WITH WASHER	2	2				
24	68F–24311–00	PIPE, FUEL 1	1	1				
25	90465–11M10	CLAMP	6	6				
26	6E5–24378–00	PIPE, JOINT 3	1	1				
27	6G5–24315–00	PIPE 5	1	1				

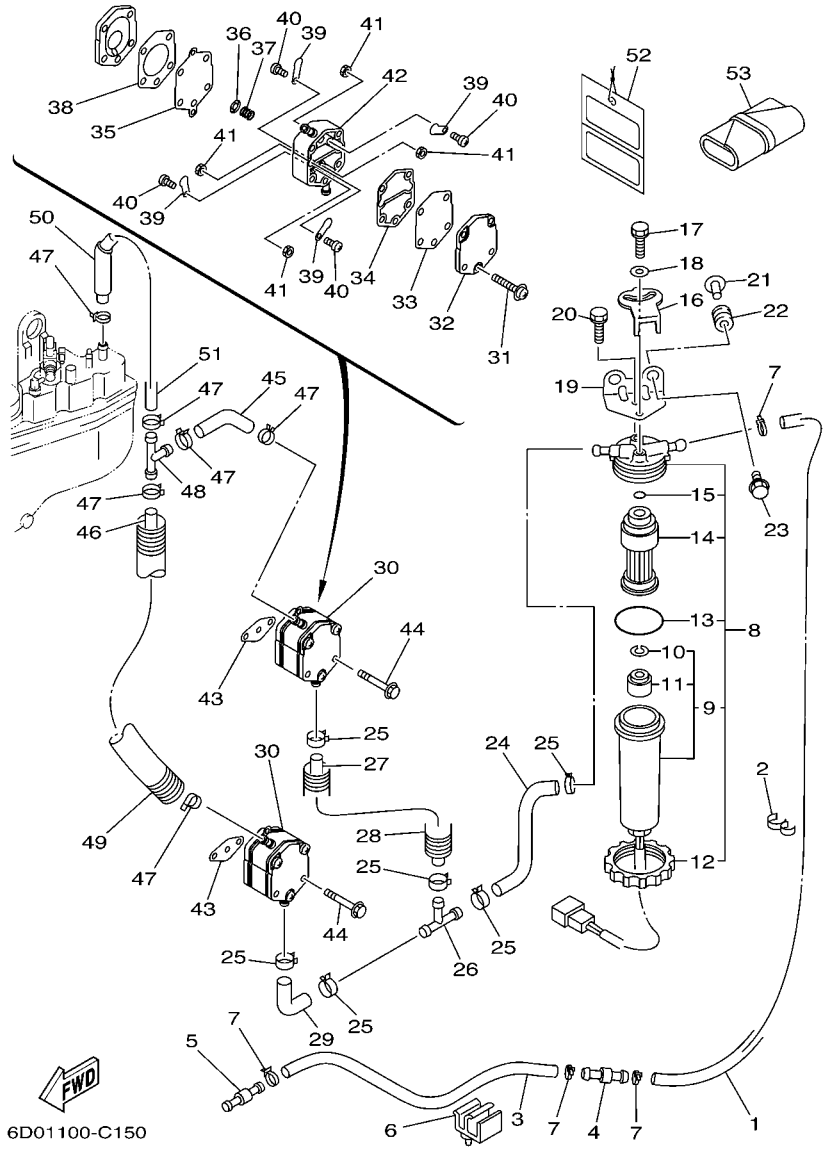

FIG. 15 FUEL 1

REF. NO.	PART NO.	DESCRIPTION	6D01	6D11				REMARKS
28	90447–19004	HOSE, WITH SPRING (L=130)	1	1				
29	6E5–24315–00	PIPE 5	1	1				
30	6E5–24410–03	FUEL PUMP ASSY	2	2				
31	6E5–24444–00	.SCREW	3	3				
32	6E5–24413–00	.BODY 2	1	1				
33	6E5–24471–00	.DIAPHRAGM	1	1				
34	6E5–24435–00	.GASKET, BODY 2	1	1				
35	6E5–24411–00	.DIAPHRAGM	1	1				
36	648–24424–00	.SEAT, SPRING	1	1				
37	6E5–24423–00	.SPRING, DIAPHRAGM	1	1				
38	6E5–24434–02	.GASKET, BODY	1	1				
39	6A0–24421–01	.VALVE, CHECK	4	4				
40	6A0–14325–00	.SCREW, PAN HEAD	4	4				
41	95380–03600	.NUT	4	4				
42	6E5–24412–10	.BODY 1	1	1				
43	650–24431–A0	GASKET, FUEL PUMP 1	2	2				
44	90101–06M00	BOLT	4	4				
45	6G5–24316–10	PIPE 6	1	1				
46	6E5–24313–00	PIPE 3	1	1				
47	90465–11M10	CLAMP	6	6				
48	6E5–24378–00	PIPE, JOINT 3	1	1				
49	65L–83557–00	TUBE	1	1				
50	90446–15M07	HOSE (L60)	1	1				
51	90445–13M12	HOSE (L235)	1	1				
52	61H–2819R–31	TAG, WARNING	1	1				
53	68F–28100–00	TOOL KIT	1	1				AP

FIG. 16 FUEL 2

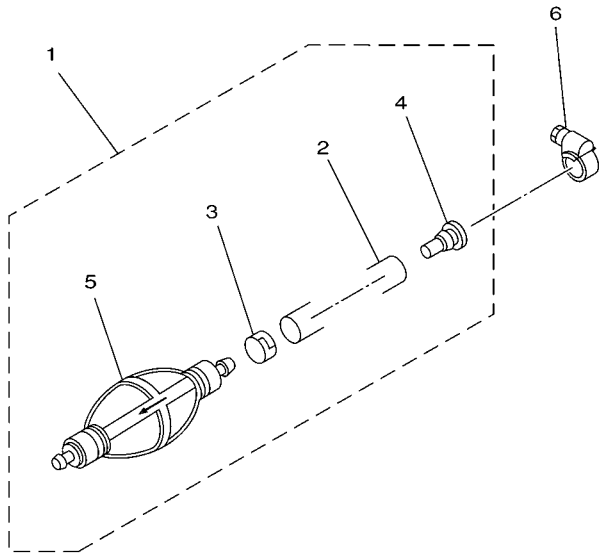

61A0200-0110

REF. NO.	PART NO.	DESCRIPTION	6D01	6D11				REMARKS
1	6Y2–24307–50	FUEL PIPE COMP. 2	1	1				AP FOR OCE
2	90445–13M01	.HOSE (L2050)	1	1				
3	6E5–24351–51	.BAND 1	1	1				
4	90480–06M19	.GROMMET	1	1				
5	6Y2–24360–60	.PRIMER PUMP ASSY	1	1				
6	90450–10M07	HOSE CLAMP ASSY	1	1				AP FOR OCE

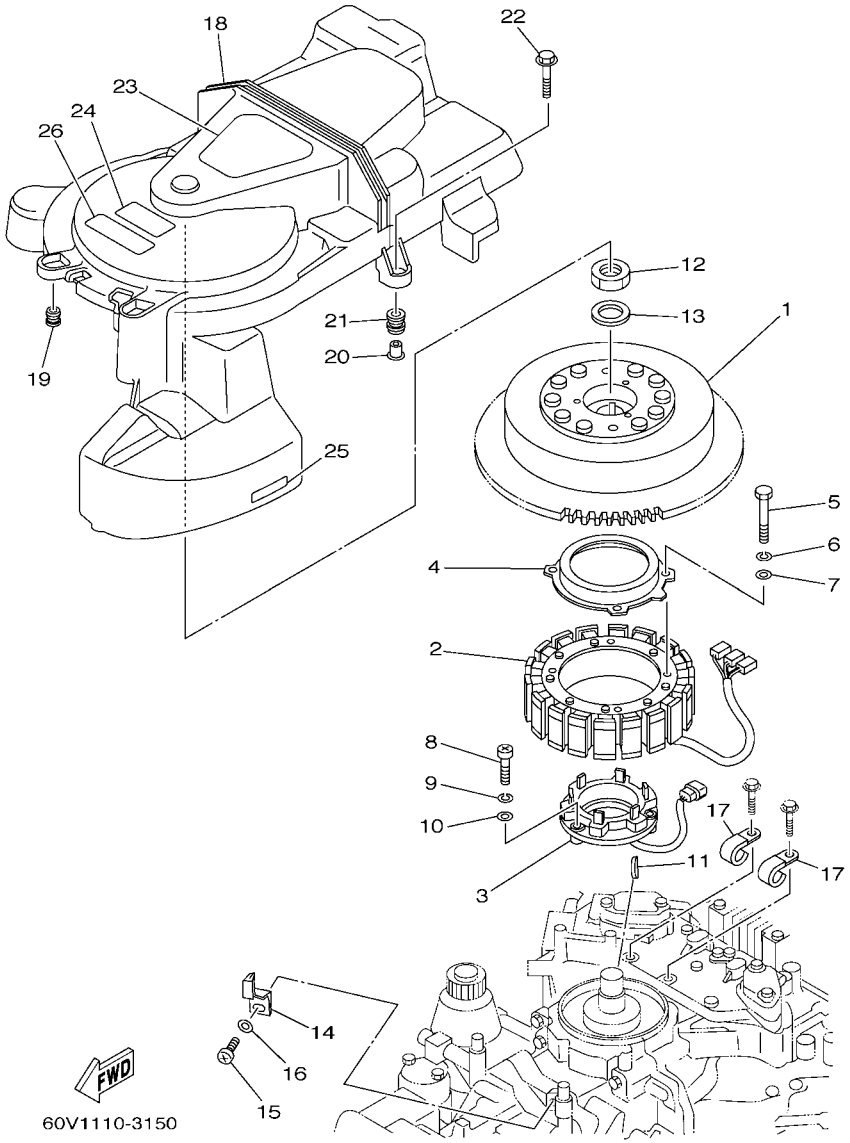

FIG. 17 GENERATOR

REF. NO.	PART NO.	DESCRIPTION	6D01	6D11				REMARKS
1	60V–81450–00	ROTOR ASSY	1	1				
2	60V–81410–01	STATOR ASSY	1	1				
3	60V–85580–00	COIL, PULSER	1	1				
4	61A–83721–00	COVER	1	1				
5	97013–06035	BOLT	4	4				
6	92903–06100	WASHER, SPRING	4	4				
7	92903–06600	WASHER, PLATE	4	4				
8	97885–05030	SCREW, PAN HEAD	3	3				
9	92995–05100	WASHER	3	3				
10	92995–05600	WASHER	3	3				
11	90280–05015	KEY, WOODRUFF	1	1				
12	90170–24M22	NUT	1	1				
13	90201–25M02	WASHER, PLATE	1	1				
14	60V–81332–00	PLATE, TIMING	1	1				
15	97885–06010	SCREW, PAN HEAD	1	1				
16	92995–06600	WASHER	1	1				
17	90465–06M86	CLAMP	2	2				
18	60V–81337–00	COVER, FLYWHEEL	1	1				
19	663–82317–01	DAMPER, IGNITION COIL	2	2				
20	624–42542–00	PIPE	2	2				
21	6A0–82317–00	DAMPER, IGNITION COIL	2	2				
22	95895–06030	BOLT, FLANGE	2	2				
23	60V–14488–00	LABEL, CAUTION	1	1				
24	6A1–83625–41	MARK 5	1	1				
25	6E5–85711–40	MARK, CAUTION	1	1				
26	6K1–83623–41	MARK 3		1				

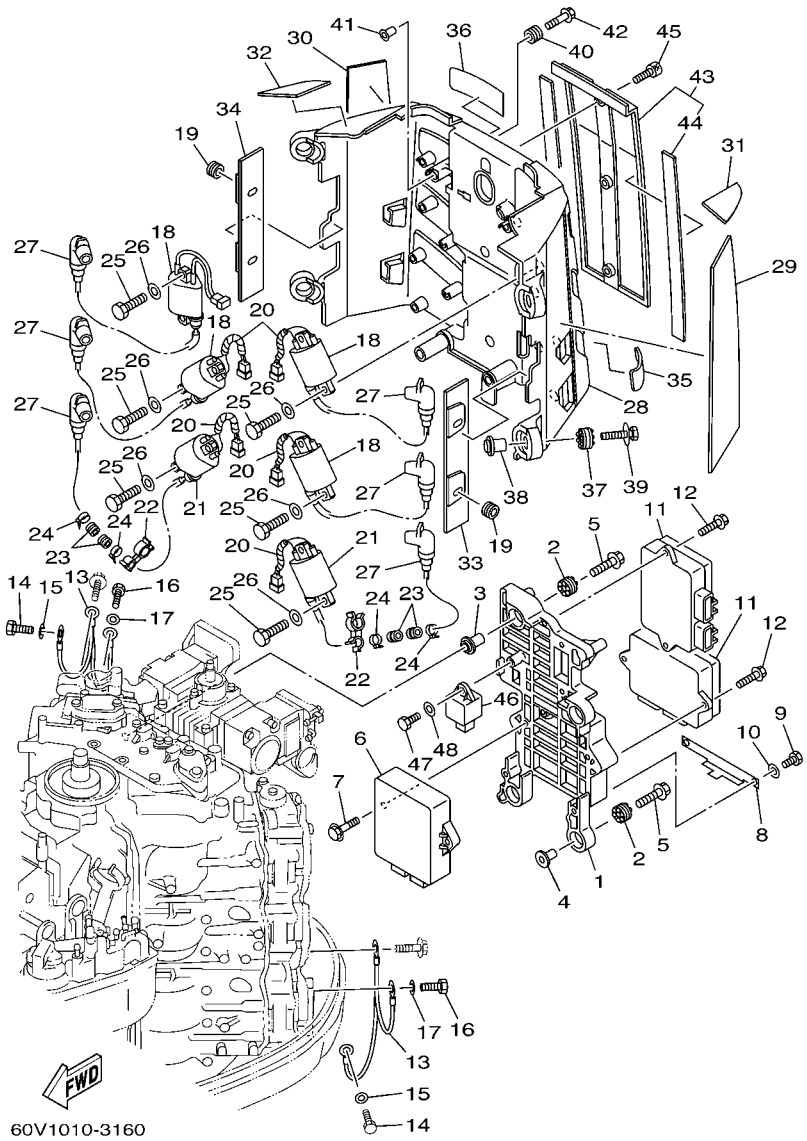

FIG. 18 ELECTRICAL 1

REF. NO.	PART NO.	DESCRIPTION	6D01	6D11				REMARKS
1	60V–85542–01–94	BRACKET	1	1				
2	60V–85564–00	GROMMET	4	4				
3	68F–86129–00	COLLAR	2	2				
4	68F–86129–10	COLLAR	2	2				
5	68F–85119–00	BOLT	4	4				
6	6D0–8591A–00	ENGINE CONTROL UNIT ASSY	1	1				
7	90119–06MA3	BOLT, WITH WASHER	2	2				
8	60V–85548–00	HOLDER	1	1				
9	97013–06014	BOLT	2	2				
10	92903–06600	WASHER, PLATE	2	2				
11	60V–8591B–00	DRIVER, INJECTOR ASSY	2	2				
12	90119–06MA2	BOLT, WITH WASHER	4	4				
13	6E5–82519–00	WIRE, EARTH LEAD	2	2				
14	97095–06012	BOLT	2	2				
15	92995–06600	WASHER	2	2				
16	97095–06012	BOLT	2	2				
17	92995–06600	WASHER	2	2				
18	60V–82310–00	IGNITION COIL ASSY	4	4				
19	90480–25161	GROMMET	4	4				
20	90446–10M01	HOSE (L60)	5	5				
21	60V–82310–10	IGNITION COIL ASSY	2	2				
22	90464–18003	CLAMP	2	2				
23	90480–22M15	GROMMET	4	4				
24	90465–11M10	CLAMP	4	4				
25	97013–05020	BOLT	12	12				
26	92903–05600	WASHER, PLATE	12	12				
27	68F–82370–01	PLUG CAP ASSY	6	6				

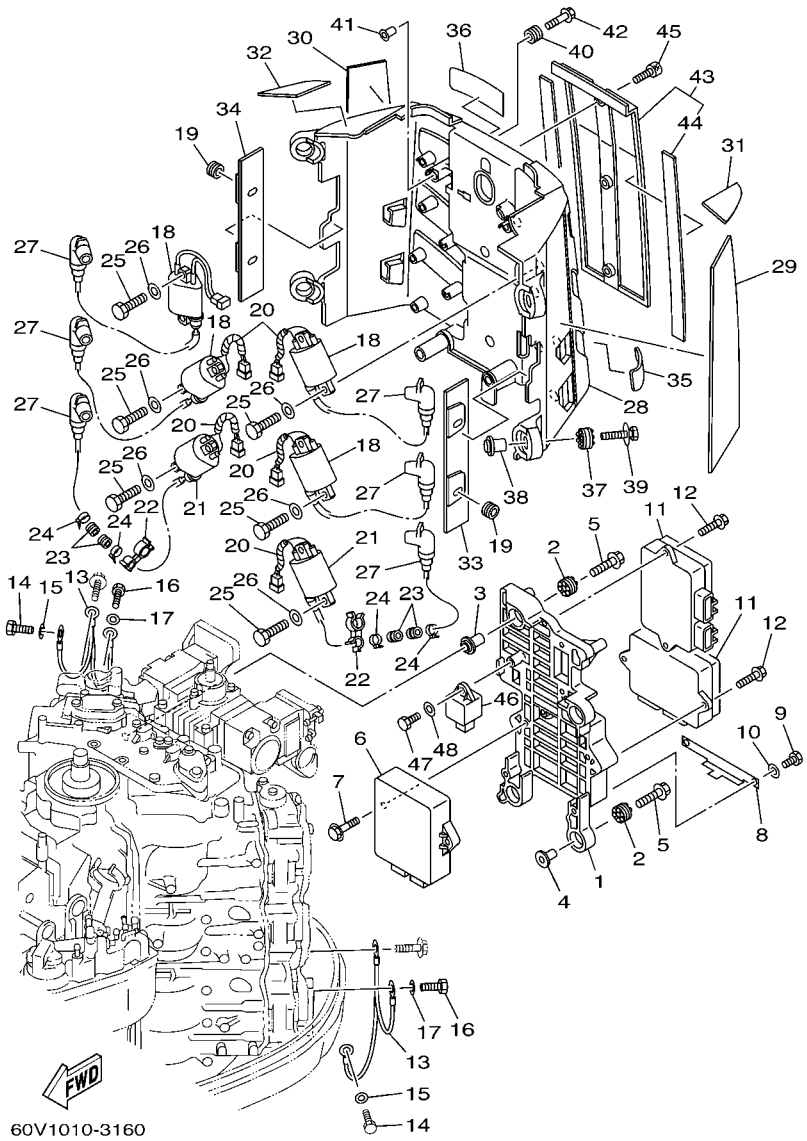

FIG. 18 ELECTRICAL 1

REF. NO.	PART NO.	DESCRIPTION	6D01	6D11				REMARKS
28	60V–82314–01	COVER, IGNITION COIL	1	1				
29	60V–24198–00	SEAT, RUBBER	1	1				
30	60V–24198–10	SEAT, RUBBER	1	1				
31	60V–8818D–00	SEAT 1	1	1				
32	60V–8818D–10	SEAT 1	1	1				
33	60V–23116–00	SEAT 2	1	1				
34	60V–23116–10	SEAT 2	1	1				
35	60V–2318U–00	PLATE, SEAT	3	3				
36	60V–2318U–10	PLATE, SEAT	3	3				
37	68F–85516–01	SPACER	4	4				
38	68F–86129–10	COLLAR	4	4				
39	68F–85119–00	BOLT	4	4				
40	6A0–82317–00	DAMPER, IGNITION COIL	4	4				
41	624–42542–00	PIPE	4	4				
42	90119–06M65	BOLT, WITH WASHER	4	4				
43	60V–8252U–00	COVER	1	1				
44	60V–23115–00	.SEAT 1	2	2				
45	90111–06034	BOLT	3	3				
46	68V–81950–00	RELAY ASSY	1	1				
47	97095–06016	BOLT	1	1				
48	92995–06600	WASHER	1	1				

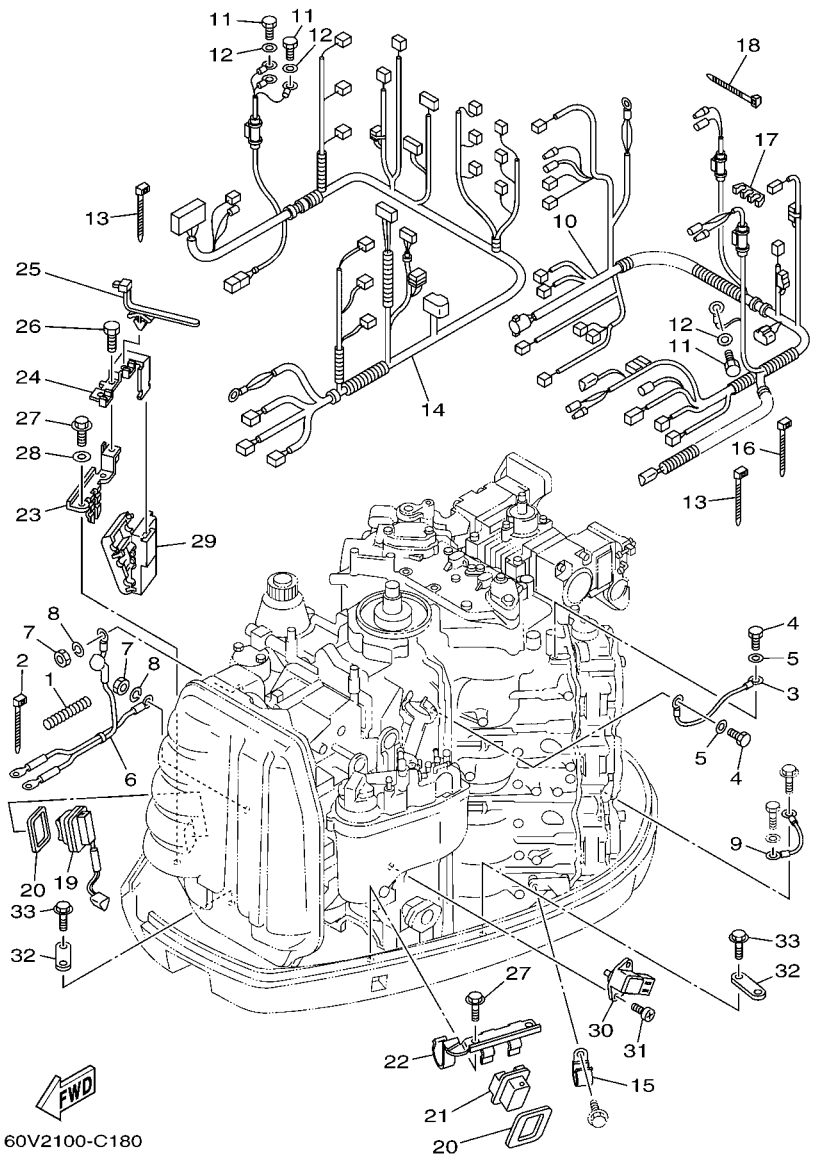

FIG. 19 ELECTRICAL 2

REF. NO.	PART NO.	DESCRIPTION	6D01	6D11				REMARKS
1	90447–07011	HOSE, WITH SPRING	1	1				
2	90465–11M10	CLAMP	1	1				
3	61A–81949–00	WIRE, LEAD	1	1				
4	97095–06012	BOLT	2	2				
5	92995–06600	WASHER	2	2				
6	60V–82105–00	WIRE HARNESS	1	1				
7	95333–08600	NUT	2	2				
8	92903–08100	WASHER, SPRING	2	2				
9	6D0–82531–00	WIRE, LEAD	1	1				
10	60V–82590–20	WIRE HARNESS ASSY	1	1				FOR USA
	60V–82590–30	WIRE HARNESS ASSY	1	1				FOR OCE
11	97095–06012	BOLT	4	4				
12	92995–06600	WASHER	4	4				
13	90465–11M52	CLAMP	2	2				
14	60V–8259M–00	WIRE HARNESS ASSY 2	1	1				
15	90465–05M87	CLAMP	1	1				
16	90465–11M10	CLAMP	1	1				
17	90464–11008	CLAMP	1	1				
18	90465–11M10	CLAMP	1	1				
19	69J–82563–00	TRIM & TILT SWITCH ASSY	1	1				
20	69J–82587–00	GASKET	2	2				
21	69J–42723–00	COVER, BOTTOM	1	1				
22	60V–83614–00	BRACKET	1	1				
23	60V–83614–10	BRACKET	1	1				
24	60V–83635–10	BRACKET	1	1				
25	90464–20213	CLAMP	2	2				
26	97095–06014	BOLT	1	1				

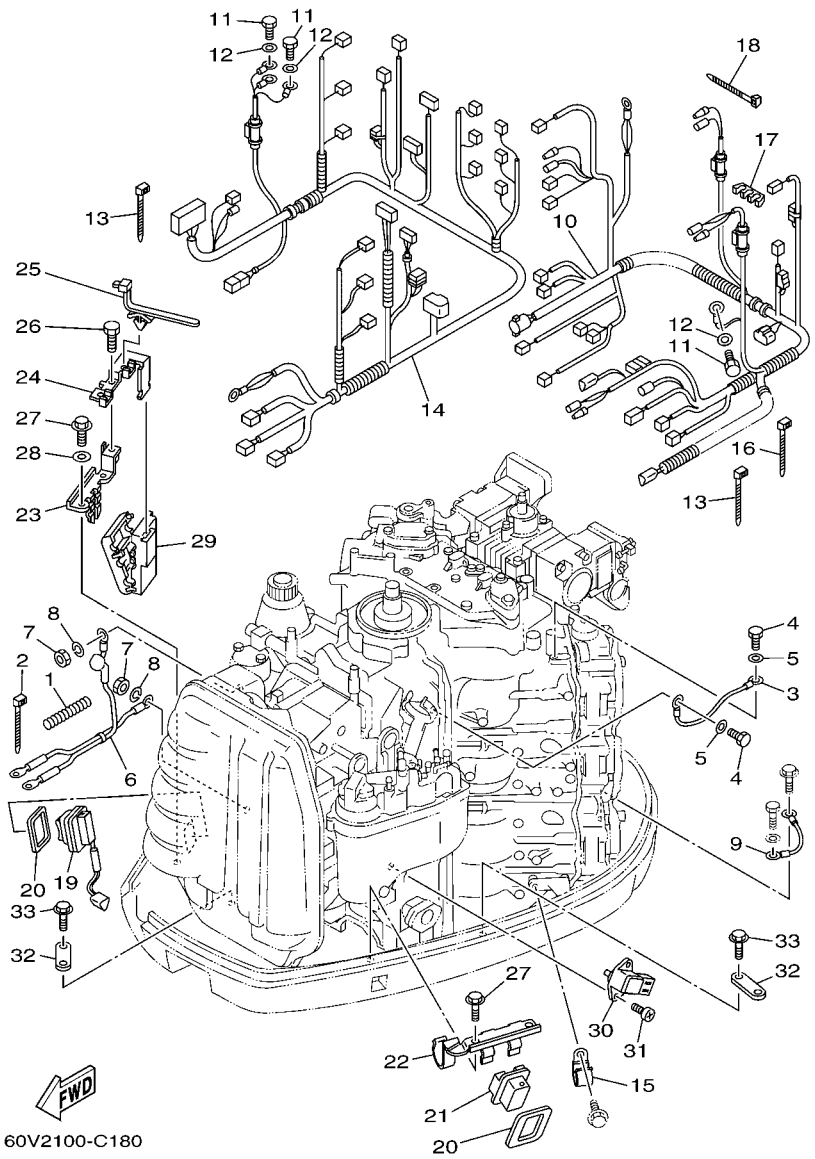

FIG. 19 ELECTRICAL 2

REF. NO.	PART NO.	DESCRIPTION	6D01	6D11				REMARKS
27	90109–06M86	BOLT	4	4				
28	60V–83618–00	PLATE	1	1				
29	68F–83634–00	GROMMET	1	1				
30	67H–82380–00	SENSOR, PRESSURE	1	1				
31	98580–06520	SCREW, PAN HEAD	2	2				
32	6E5–82588–00	PLATE	2	2				
33	95895–06020	BOLT, FLANGE	2	2				

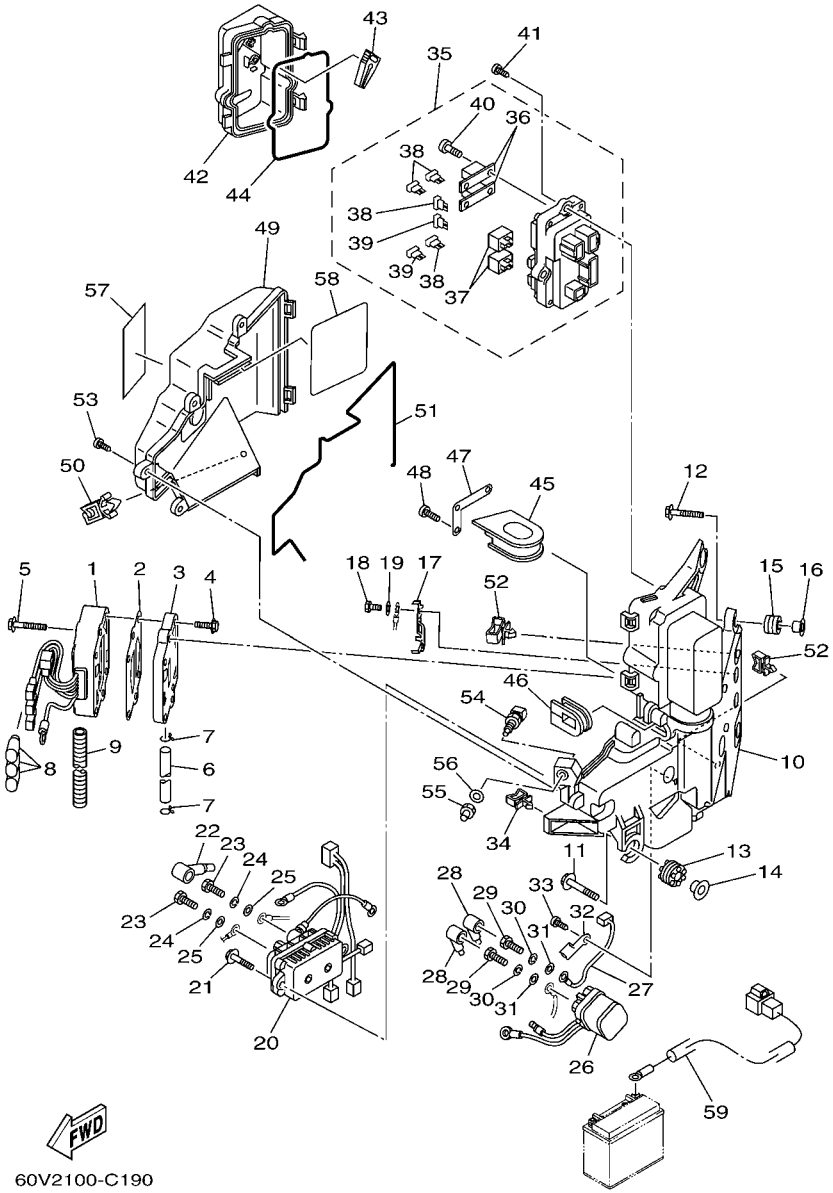

FIG. 20 ELECTRICAL 3

REF. NO.	PART NO.	DESCRIPTION	6D01	6D11				REMARKS
1	60V–81960–01	RECTIFIER & REGULATOR ASSY	1	1				
2	60V–81975–A0	PLATE, RECTIFIER FITTING	1	1				
3	60V–81972–00–1S	COVER, RECTIFIER	1	1				
4	90119–06MA3	BOLT, WITH WASHER	4	4				
5	90119–06MA4	BOLT, WITH WASHER	2	2				
6	90445–09M25	HOSE (L600)	2	2				
7	90467–08M18	CLIP	2	2				
8	6L2–82599–01	COVER, CONNECTER	3	3				
9	90447–10004	HOSE, WITH SPRING	1	1				
10	60V–81948–00	BRACKET	1	1				
11	68F–85119–00	BOLT	3	3				
12	90119–06M65	BOLT, WITH WASHER	1	1				
13	68F–85516–01	SPACER	3	3				
14	68F–86129–00	COLLAR	3	3				
15	6A0–82317–00	DAMPER, IGNITION COIL	1	1				
16	624–42542–00	PIPE	1	1				
17	60V–87149–00	CONNECTOR	1	1				
18	97095–06012	BOLT	2	2				
19	92995–06600	WASHER	2	2				
20	60V–81950–00	RELAY ASSY	1	1				
21	90119–06MA4	BOLT, WITH WASHER	2	2				
22	682–82119–01	COVER, LEAD WIRE	1	1				
23	97095–06010	BOLT	2	2				
24	92995–06100	WASHER, SPRING	2	2				
25	92995–06600	WASHER	2	2				
26	68V–8194A–00	RELAY	1	1				
27	68F–82117–00	WIRE, LEAD	1	1				

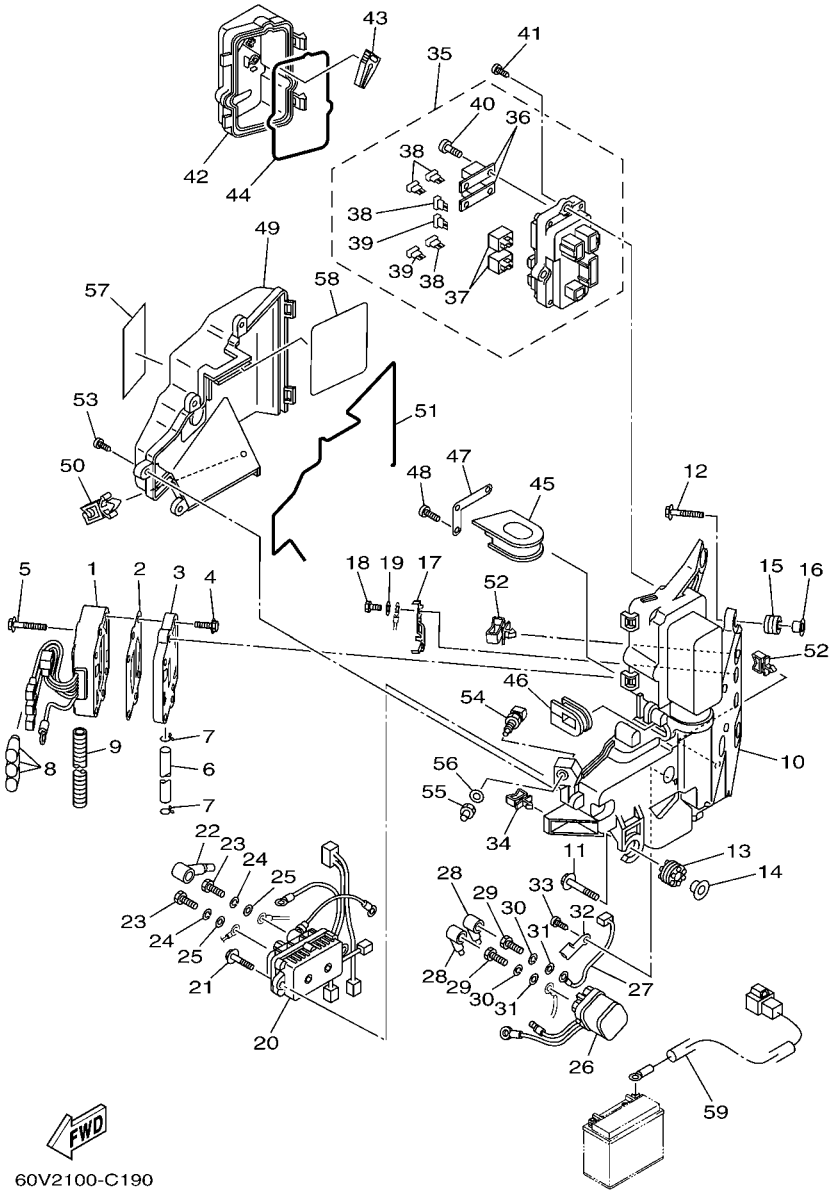

FIG. 20 ELECTRICAL 3

REF. NO.	PART NO.	DESCRIPTION	6D01	6D11				REMARKS
28	682–82119–01	COVER, LEAD WIRE	2	2				
29	97095–06010	BOLT	2	2				
30	92995–06100	WASHER, SPRING	2	2				
31	92995–06600	WASHER	2	2				
32	68V–81953–00	STAY, RELAY	1	1				
33	97780–60620	SCREW, TAPPING	1	1				
34	90464–23199	CLAMP	2	2				
35	60V–82170–00	FUSE BOX ASSY	1	1				
36	60V–82151–00	.FUSE (100A)	2	2				
37	68F–8195A–00	.RELAY ASSY	2	2				
38	67F–82151–00	.FUSE (20A)	4	4				
39	67F–82151–10	.FUSE (30A)	2	2				
40	68F–82846–00	.SCREW, PAN HEAD (M5)	4	4				
41	97780–50620	SCREW, TAPPING	3	3				
42	60V–85544–00	CASE	1	1				
43	67F–2812A–00	PULLER, FUSE	1	1				
44	60V–82157–00	DAMPER	1	1				
45	60V–81336–00	GROMMET	1	1				
46	60V–81336–10	GROMMET	1	1				
47	60V–81128–00	CLAMP	1	1				
48	97780–50620	SCREW, TAPPING	3	3				
49	60V–81942–10	COVER	1	1				
50	90464–08004	CLAMP	1	1				
51	60V–82176–00	DAMPER	1	1				
52	90464–23199	CLAMP	2	2				
53	90169–05M00	SCREW, TRUSS HEAD TAPPING	4	4				
54	65L–85886–00	THERMOSENSOR	1	1				

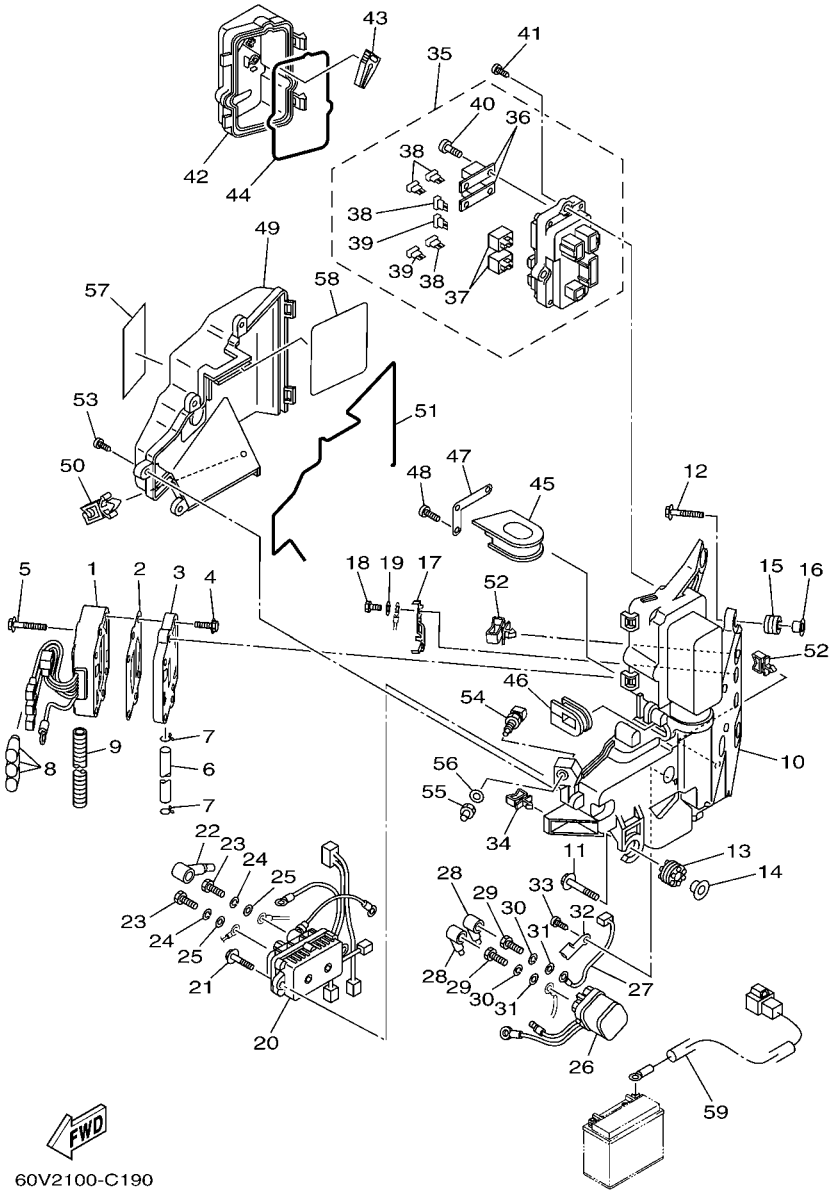

FIG. 20 ELECTRICAL 3

REF. NO.	PART NO.	DESCRIPTION	6D01	6D11				REMARKS
55	60V–85553–00	NUT, ROTOR	1	1				
56	90201–12M34	WASHER, PLATE	1	1				
57	60V–81919–00	GRAPHIC, REGULATOR	1	1				
58	60V–81919–10	GRAPHIC, REGULATOR	1	1				
59	69J–81949–00	WIRE, LEAD (ISOLATOR CABLE)	1	1				AP

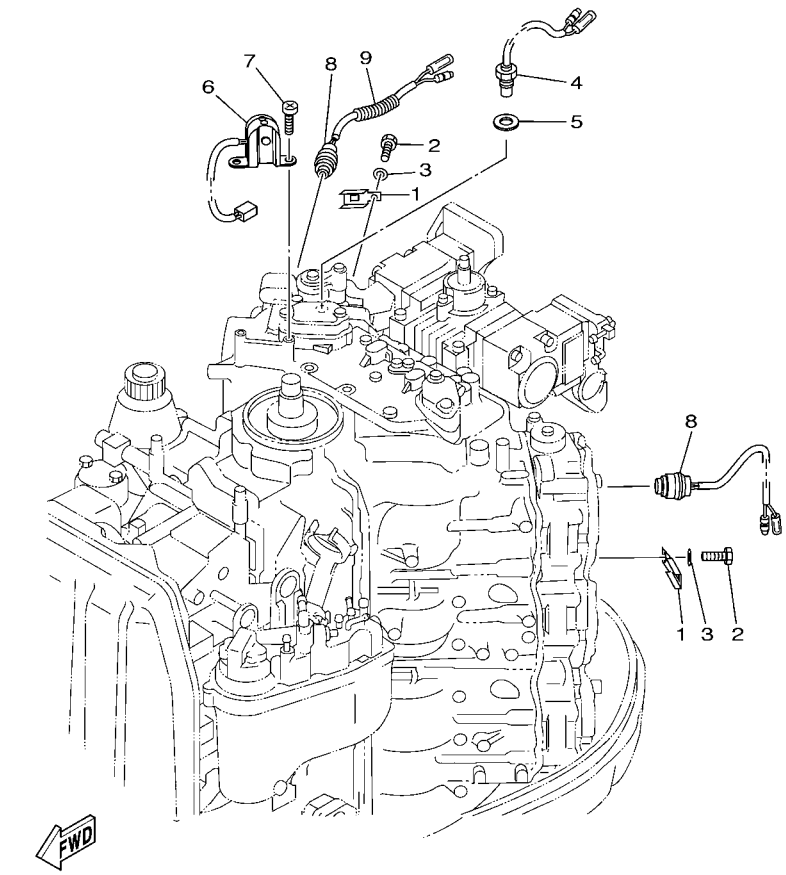

60V1010-3190

FIG. 21 ELECTRICAL 4

REF. NO.	PART NO.	DESCRIPTION	6D01	6D11				REMARKS
1	60V–82588–00	PLATE	3	3				
2	97095–06012	BOLT	3	3				
3	92995–06600	WASHER	3	3				
4	61A–85790–00	THERMOSENSOR ASSY	1	1				
5	92990–10600	WASHER, PLATE	1	1				
6	61A–85895–00	CRANK POSITION SENDER	1	1				
7	97885–05012	SCREW, PAN HEAD	2	2				
8	688–82560–10	THERMO SWITCH ASSY	2	2				
9	90446–10M87	HOSE (L75)	1	1				

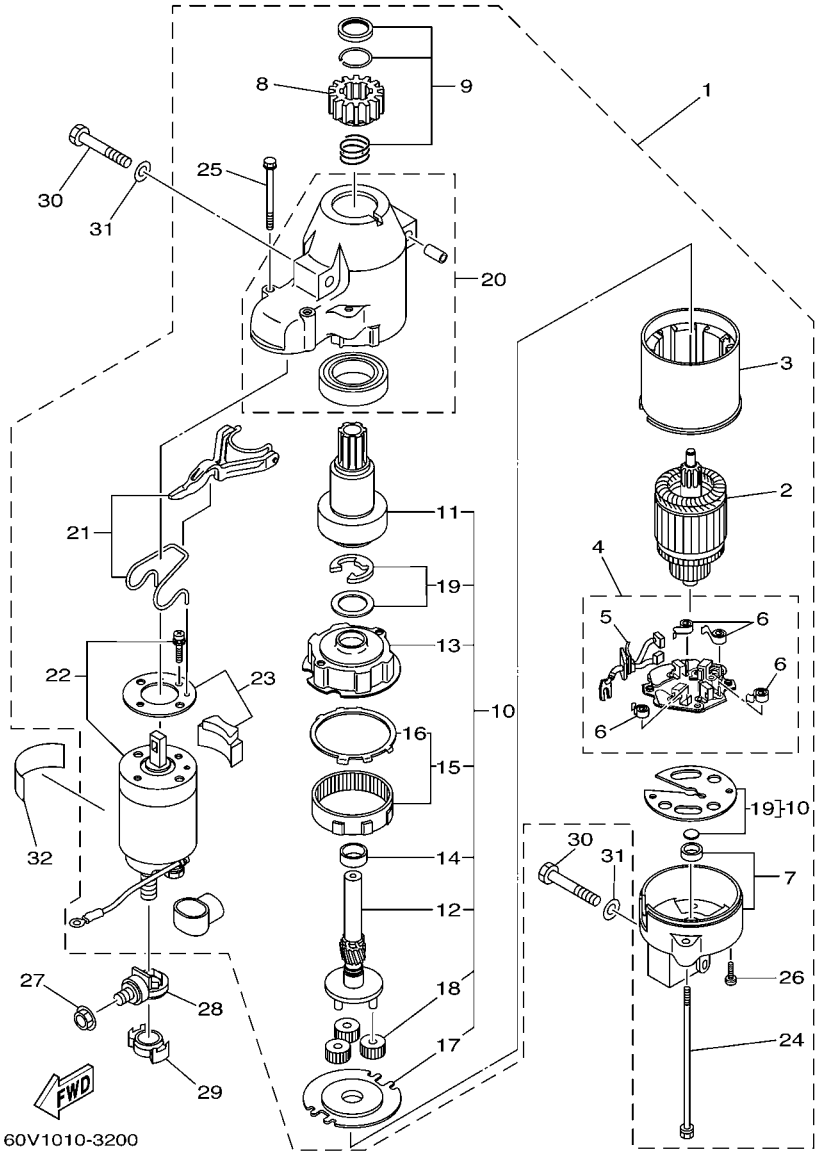

FIG. 22 STARTING MOTOR

REF. NO.	PART NO.	DESCRIPTION	6D01	6D11				REMARKS
1	6D0–81800–00	STARTING MOTOR ASSY	1	1				
2	67F–81850–00	.ARMATURE ASSY	1	1				
3	67F–81810–00	.STATOR ASSY	1	1				
4	69J–81840–00	.BRUSH HOLDER ASSY	1	1				
5	69J–81801–00	..BRUSH SET	1	1				
6	67F–81813–00	..SPRING, BRUSH	4	4				
7	68F–81820–00	.REAR BRACKET ASSY	1	1				
8	67F–81808–00	.PINION ASSY	1	1				
9	67F–81857–00	.PINION STOPPER SET	1	1				
10	67F–81807–00	.GEAR ASSY, STARTING MOTOR	1	1				
11	67F–81832–00	..CLUTCH, OVER RUN	1	1				
12	67F–81836–00	..SHAFT, PINION	1	1				
13	67F–81821–00	..BRACKET, CENTER 1	1	1				
14	67F–81841–00	..BEARING	1	1				
15	67F–81891–00	..GEAR, RING	1	1				
16	67F–8183R–00	...GASKET	1	1				
17	67F–81830–00	..BRACKET, CENTER 2	1	1				
18	60V–8183T–00	..GEAR, IDLER	3	3				
19	67F–81809–00	..WASHER KIT	1	1				
20	60X–81842–00	.COVER	1	1				
21	69J–81839–00	.LEVER ASSY	1	1				
22	6D0–81941–00	.STARTER RELAY ASSY	1	1				
23	69J–81869–00	.COVER, DUST	1	1				
24	6K7–81826–10	.BOLT	2	2				
25	69J–81828–00	.BOLT 2	2	2				
26	67F–81846–00	.SCREW	2	2				
27	90179–08003	NUT	1	1				

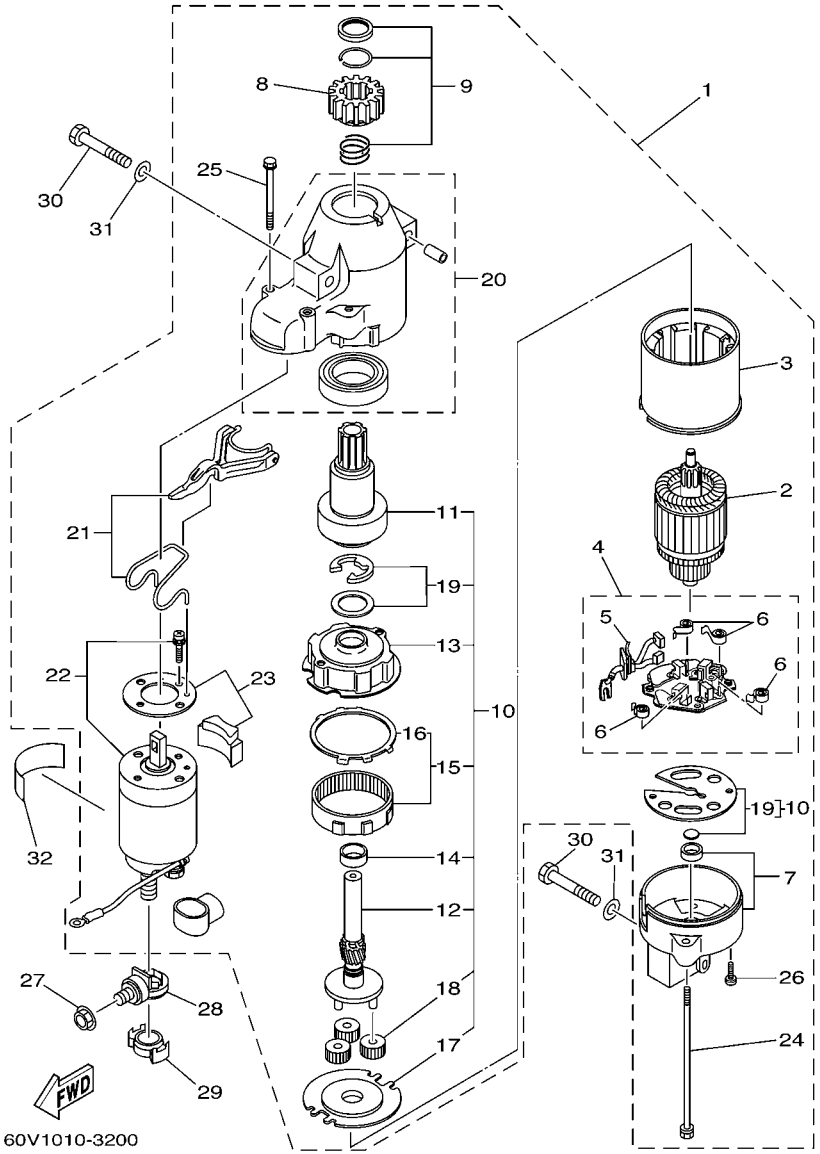

FIG. 22 STARTING MOTOR

REF. NO.	PART NO.	DESCRIPTION	6D01	6D11				REMARKS
28	60V–81925–00	TERMINAL	1	1				
29	68F–82582–00	COVER, WIRE HARNESS	1	1				
30	97013–08045	BOLT	3	3				
31	92903–08600	WASHER, PLATE	3	3				
32	67F–83627–01	LABEL, CAUTION 7	1	1				

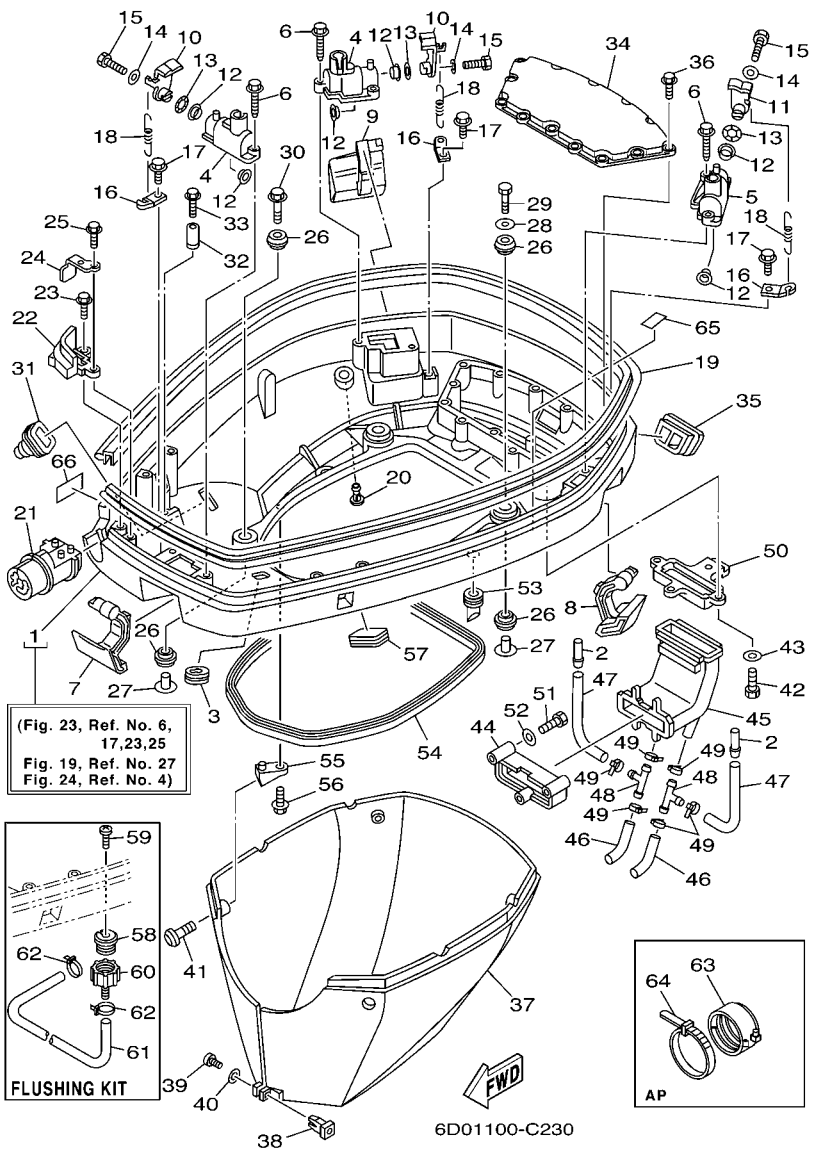

FIG. 23 BOTTOM COWLING

REF. NO.	PART NO.	DESCRIPTION	6D01	6D11				REMARKS
1	60V–42710–00–8D	BOTTOM COWLING ASSY	1	1				
2	6E5–24377–00	PIPE, JOINT 3	2	2				
3	6D0–42727–00	GROMMET	1	1				
4	68F–42828–00–94	PLATE, CLAMP	2	2				
5	68F–42828–10–94	PLATE, CLAMP	1	1				
6	90109–06M82	BOLT	6	6				
7	60V–42815–00–8D	LEVER, CLAMP	1	1				
8	60V–42816–00–8D	LEVER, CLAMP	1	1				
9	60V–42817–00–8D	LEVER, CLAMP	1	1				
10	68F–42818–00	LEVER, CLAMP	2	2				
11	67F–42818–00	LEVER, CLAMP	1	1				
12	90386–15M73	BUSH	6	6				
13	90206–15M18	WASHER, WAVE	3	3				
14	90201–06068	WASHER, PLATE	3	3				
15	97095–06016	BOLT	3	3				
16	64D–43144–00	HOOK, SPRING	3	3				
17	90109–06M80	BOLT	3	3				
18	90506–16M34	SPRING, TENSION	3	3				
19	60V–42615–00	SEAL	1	1				
20	6E5–44391–00	NIPPLE, HOSE	1	1				
21	60V–42725–00	GROMMET	1	1				
22	60V–42738–00–8D	PLATE, FITTING	1	1				
23	90109–06M81	BOLT	2	2				
24	64D–42738–10–5B	PLATE, FITTING	1	1				
25	90109–06M81	BOLT	1	1				
26	90480–22M81	GROMMET	8	8				
27	90387–08M37	COLLAR	4	4				

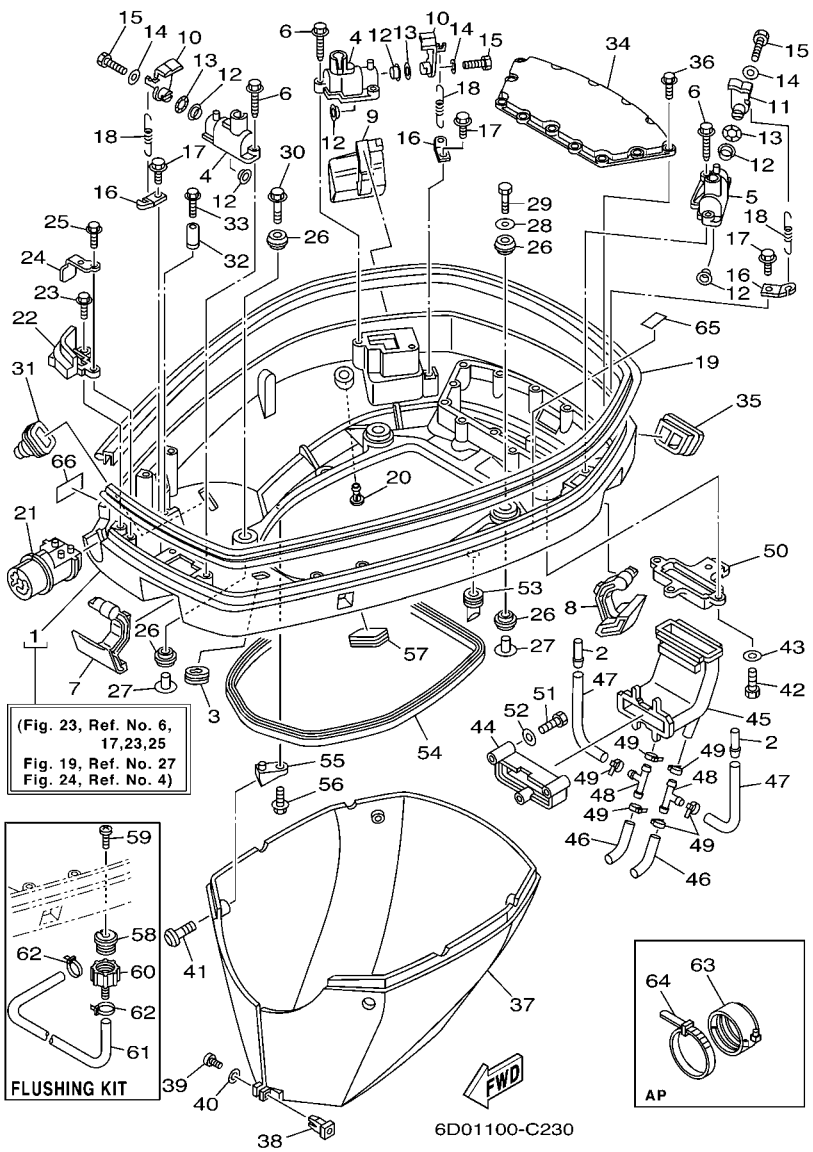

FIG. 23 BOTTOM COWLING

REF. NO.	PART NO.	DESCRIPTION	6D01	6D11				REMARKS
28	90201–08M54	WASHER, PLATE	1	1				
29	97075–08035	BOLT	1	1				
30	90119–08M22	BOLT, WITH WASHER	3	3				
31	688–42726–10	GROMMET	1	1				
32	6E5–82588–00	PLATE	1	1				
33	95895–06020	BOLT, FLANGE	1	1				
34	6D0–42723–00–5B	COVER, BOTTOM	1	1				
35	60V–42718–00	RUBBER, SEAL 3	1	1				
36	95895–06020	BOLT, FLANGE	13	13				
37	60V–42741–00–8D	APRON	1	1				
38	60V–42756–00	STAY, CLAMP	1	1				
39	97880–04016	SCREW, PAN HEAD	1	1				
40	92990–04600	WASHER, PLATE	1	1				
41	90111–06034	BOLT	4	4				
42	97095–06020	BOLT	4	4				
43	92995–06600	WASHER	4	4				
44	60V–12581–00	JOINT, HOSE 1	1	1				
45	60V–12576–00	HOSE 1	1	1				
46	60V–12578–00	HOSE 3	2	2				
47	60V–12588–00	HOSE 5	2	2				
48	6E5–24378–00	PIPE, JOINT 3	2	2				
49	90465–11M10	CLAMP	6	6				
50	60V–42771–00	APRON	1	1				
51	97075–08055	BOLT	3	3				
52	92995–08600	WASHER	3	3				
53	61A–42717–00	RUBBER, SEAL 2	4	4				
54	61A–42716–00	RUBBER, SEAL 1	1	1				

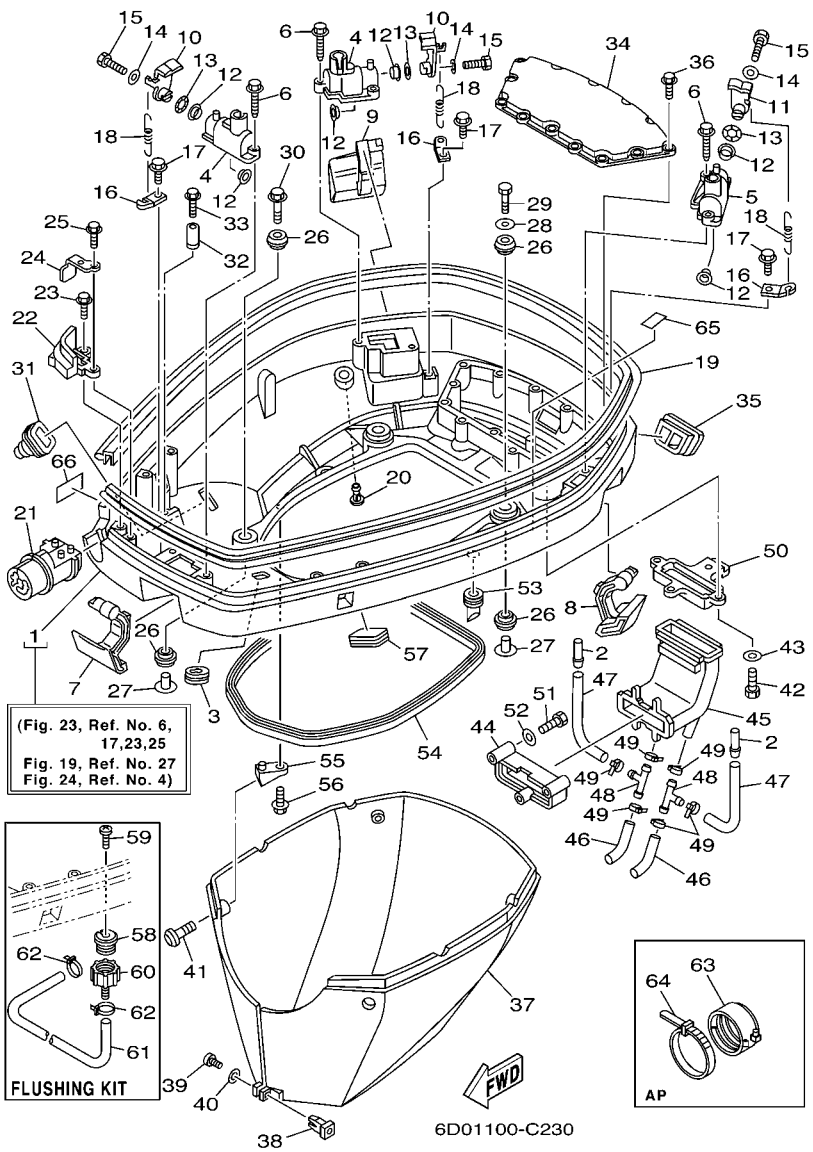

FIG. 23 BOTTOM COWLING

REF. NO.	PART NO.	DESCRIPTION	6D01	6D11				REMARKS
55	60V–42774–00	STAY, APRON 1	4	4				
56	95895–06016	BOLT, FLANGE	4	4				
57	6H4–42726–00	GROMMET	1	1				
58	6R3–12572–00	ADAPTER	1	1				FLUSHING KIT
59	90169–05M00	SCREW, TRUSS HEAD TAPPING	1	1				FLUSHING KIT
60	6R3–12580–00	JOINT ASSY	1	1				FLUSHING KIT
61	90445–11M36	HOSE (L540)	1	1				FLUSHING KIT
62	90465–11M10	CLAMP	2	2				FLUSHING KIT
63	68F–42753–00	FASTNER	1	1				AP
64	90464–20258	CLAMP	1	1				AP
65	68F–42791–01	MARK 1	1	1				
66	60V–2415E–40	LABEL, CAUTION	1	1				

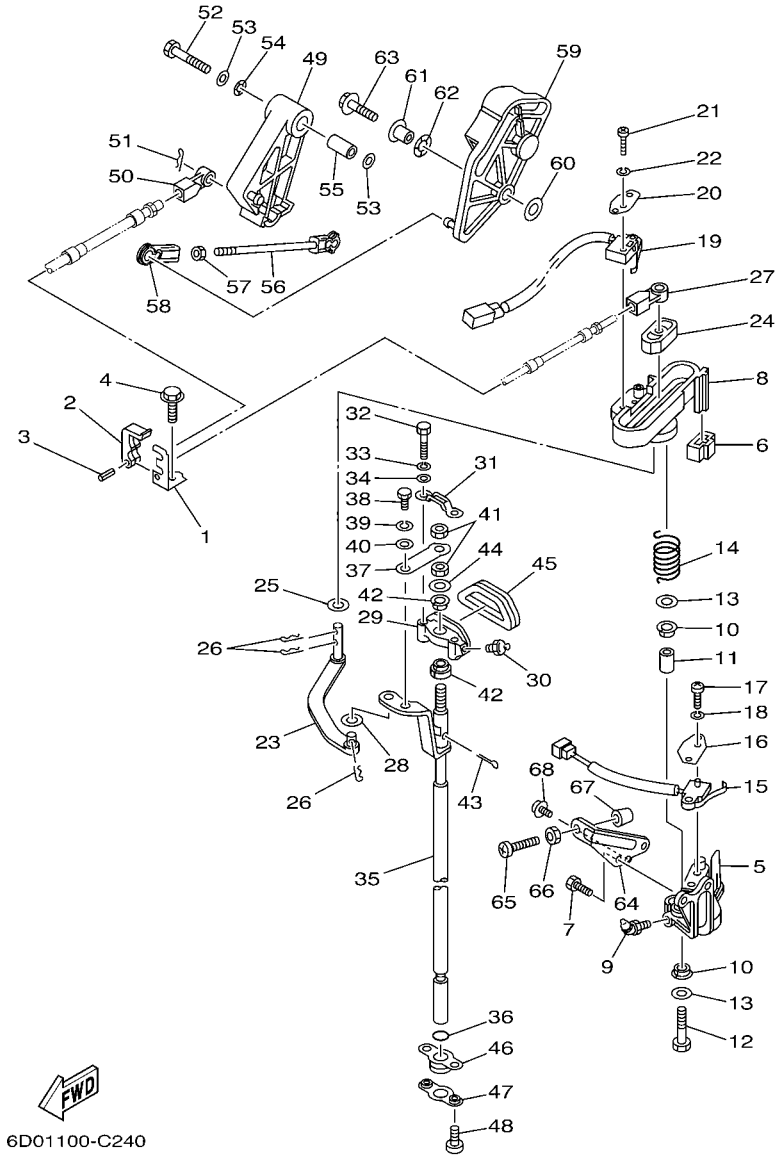

FIG. 24 CONTROL

REF. NO.	PART NO.	DESCRIPTION	6D01	6D11				REMARKS
1	60V–48531–10	BRACKET, REMOTE CONTROL 1	1	1				
2	663–48538–00	CLAMP, CABLE 1	1	1				
3	91690–30010	PIN, SPRING	1	1				
4	90109–06M80	BOLT	1	1				
5	60V–44117–00–1S	BRACKET	1	1				
6	60V–44194–00	CAP	1	1				
7	97095–06020	BOLT	2	2				
8	60V–44176–00–1S	BRACKET	1	1				
9	93700–06M01	NIPPLE, GREASE	1	1				
10	90386–12069	BUSH	2	2				
11	90387–08M09	COLLAR	1	1				
12	97095–08035	BOLT	1	1				
13	92995–08200	WASHER	2	2				
14	90508–20M31	SPRING, TORSION	1	1				
15	61A–8259F–00	SWITCH ASSY	1	1				
16	61A–82588–01	PLATE	1	1				
17	97885–04016	SCREW, PAN HEAD	2	2				
18	92995–04100	WASHER	2	2				
19	60V–8259F–00	SWITCH ASSY	1	1				
20	61A–82588–01	PLATE	1	1				
21	97885–04016	SCREW, PAN HEAD	2	2				
22	92995–04100	WASHER	2	2				
23	61A–44121–00	LEVER, SHIFT ROD	1	1				
24	68J–44122–01	BUSHING, SHIFT ROD LEVER	1	1				
25	90202–08M20	WASHER, PLATE	1	1				
26	90468–18008	CLIP	3	3				
27	6E5–48344–00	CABLE END, REMOTE CONTROL	1	1				

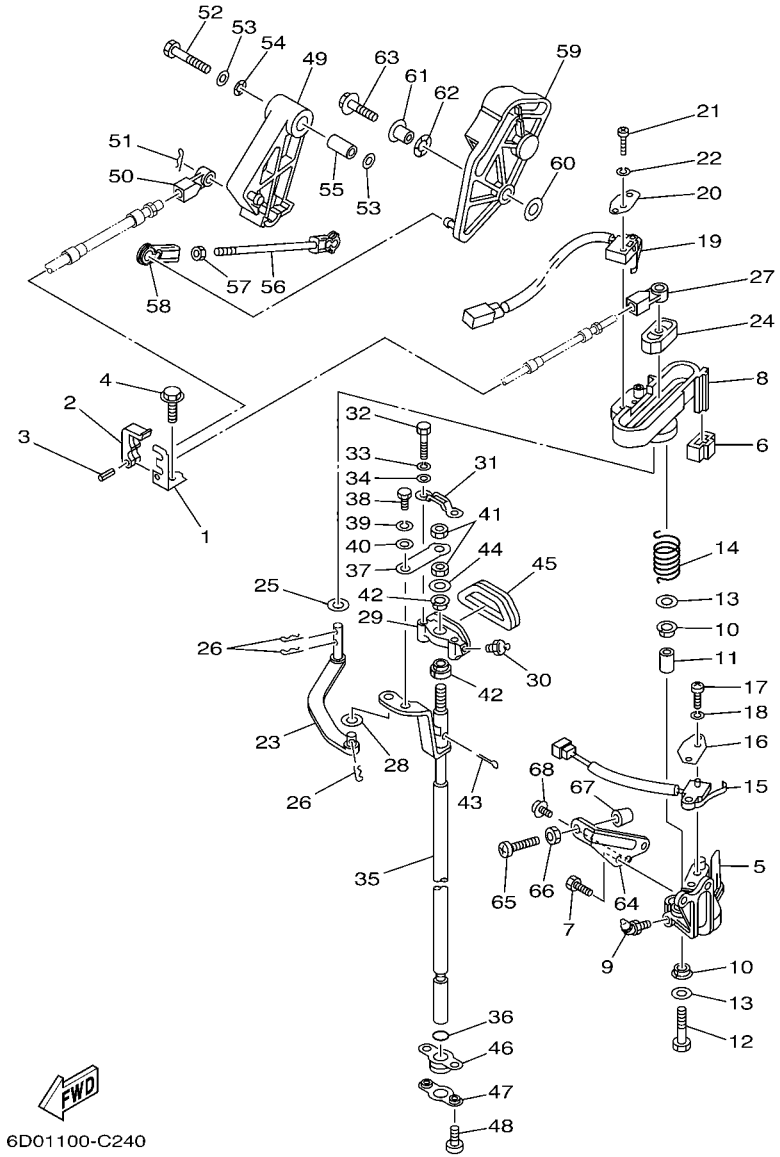

FIG. 24 CONTROL

REF. NO.	PART NO.	DESCRIPTION	6D01	6D11				REMARKS
28	90202–06007	WASHER, PLATE	1	1				
29	61A–44118–00–8D	BRACKET	1	1				
30	93700–06M03	NIPPLE, GREASE	1	1				
31	61A–44116–00	SPRING	1	1				
32	97095–06030	BOLT	2	2				
33	92995–06100	WASHER, SPRING	2	2				
34	92995–06600	WASHER	2	2				
35	61A–44120–22	HANDLE GEAR SHIFT ASSY	1	1				X
	61A–44120–32	HANDLE GEAR SHIFT ASSY	1	1				U
36	93210–09165	O-RING	1	1				
37	61A–44112–00	STAY, HANDLE GEAR SHIFT	1	1				
38	97013–06012	BOLT	1	1				
39	92903–06100	WASHER, SPRING	1	1				
40	92903–06600	WASHER, PLATE	1	1				
41	95313–08600	NUT	2	2				
42	90386–90M90	BUSH	2	2				
43	91490–20012	PIN, COTTER	1	1				
44	90201–09M02	WASHER, PLATE	1	1				
45	61A–15315–00	SEAL, CRANKCASE	1	1				
46	61A–42724–00	GROMMET	1	1				
47	61A–44138–00	WASHER	1	1				
48	97885–06008	SCREW, PAN HEAD	2	2				
49	65L–41632–01	LEVER, MAGNETO CONTROL	1	1				
50	6E5–48344–00	CABLE END, REMOTE CONTROL	1	1				
51	90468–18008	CLIP	1	1				
52	97013–08045	BOLT	1	1				
53	92990–08200	WASHER, PLAIN	2	2				

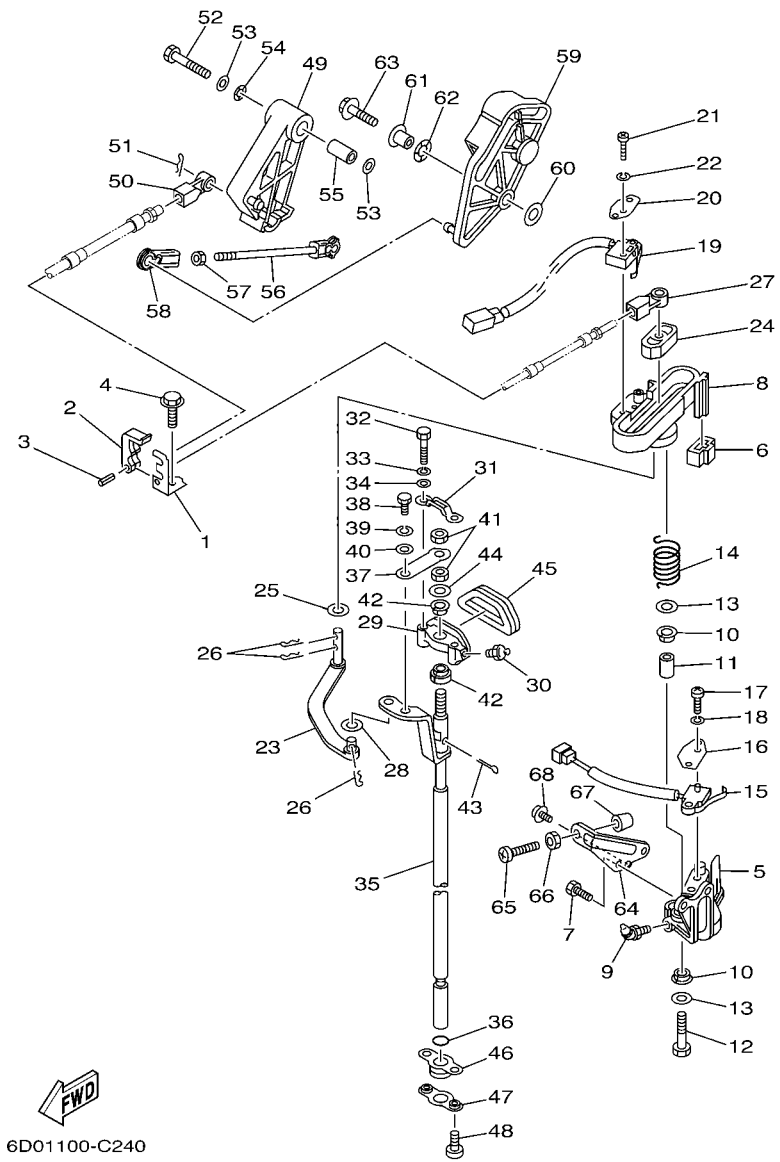

FIG. 24 CONTROL

REF. NO.	PART NO.	DESCRIPTION	6D01	6D11				REMARKS
54	90206–12M00	WASHER, WAVE	1	1				
55	90387–08M16	COLLAR	1	1				
56	61A–41237–00	JOINT, LINK	1	1				
57	95380–05600	NUT	1	1				
58	6H4–41237–00	JOINT, LINK	1	1				
59	6D0–41230–00	CAM ACCELERATOR COMP	1	1				
60	90201–06M31	WASHER, PLATE	1	1				
61	90387–06M29	COLLAR	1	1				
62	90206–10M04	WASHER, WAVE	1	1				
63	90119–06MA4	BOLT, WITH WASHER	1	1				
64	69L–42744–00	STAY	1	1				
65	90157–06006	SCREW, PAN HEAD	1	1				
66	95380–06600	NUT, HEXAGON	1	1				
67	688–44194–00	CAP	1	1				
68	90159–05M25	SCREW, WITH WASHER	1	1				

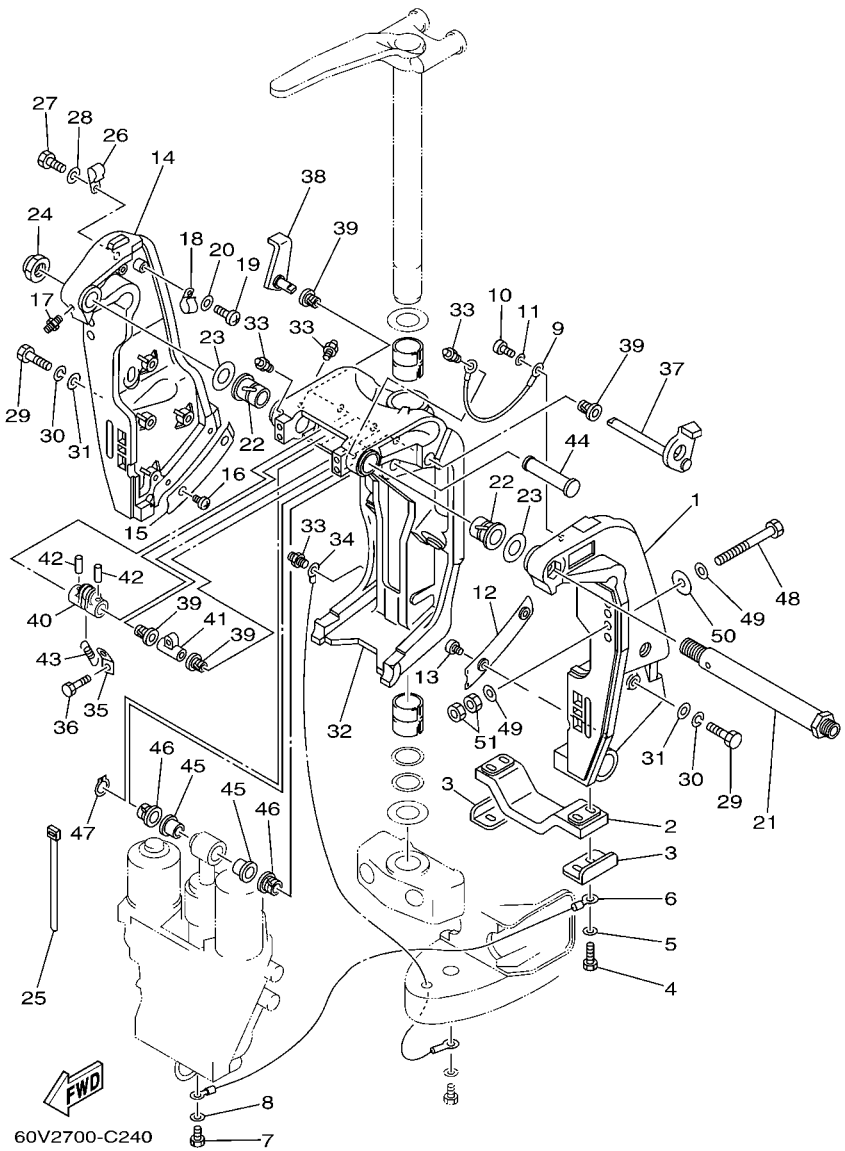

FIG. 25 BRACKET 1

REF. NO.	PART NO.	DESCRIPTION	6D01	6D11				REMARKS
1	69J–43111–01–8D	BRACKET, CLAMP	1	1				
2	6G5–45251–02	ANODE	1	1				
3	6G5–44526–00	PLATE	2	2				
4	97095–06025	BOLT	4	4				
5	92995–06600	WASHER	4	4				
6	6H1–82148–00	WIRE, LEAD 4	1	1				
7	97095–06010	BOLT	1	1				
8	92995–06600	WASHER	1	1				
9	6E5–82148–00	WIRE, LEAD 4	1	1				
10	97885–06012	SCREW, PAN HEAD	1	1				
11	92995–06600	WASHER	1	1				
12	61A–43132–00	WASHER, FRICTION	1	1				
13	97885–06010	SCREW, PAN HEAD	2	2				
14	69J–43112–01–8D	BRACKET, CLAMP	1	1				
15	61A–43133–00	WASHER,FRICTION	1	1				
16	97885–06010	SCREW, PAN HEAD	2	2				
17	93700–06M03	NIPPLE, GREASE	1	1				
18	90465–08M83	CLAMP	1	1				
19	97885–06012	SCREW, PAN HEAD	1	1				
20	92995–06600	WASHER	1	1				
21	6R3–43131–00	BOLT, CLAMP BRACKET	1	1				
22	90386–25M31	BUSH	2	2				
23	90201–26M59	WASHER, PLATE	2	2				
24	90185–22M11	NUT, SELF-LOCKING	1	1				
25	90465–11M10	CLAMP	4	4				
26	90465–08M83	CLAMP	1	1				
27	97095–06014	BOLT	1	1				

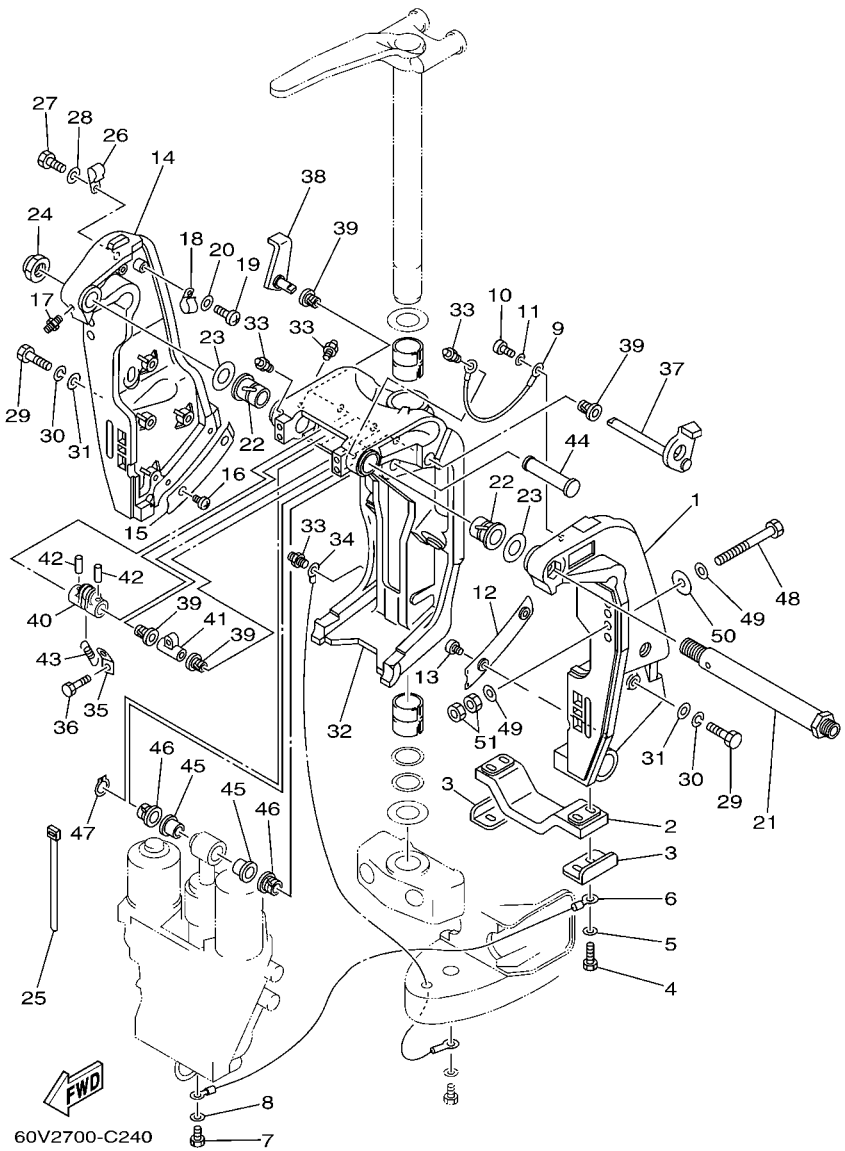

FIG. 25 BRACKET 1

REF. NO.	PART NO.	DESCRIPTION	6D01	6D11				REMARKS
28	92995–06600	WASHER	1	1				
29	97095–10045	BOLT	8	8				
30	92995–10100	WASHER	8	8				
31	92995–10600	WASHER	8	8				
32	61A–43311–21–8D	BRACKET, SWIVEL 1	1	1				X
	61A–43311–31–8D	BRACKET, SWIVEL 1	1	1				U
33	93700–06M03	NIPPLE, GREASE	5	5				
34	61A–82147–20	WIRE, LEAD 4	1	1				X
	61A–82147–30	WIRE, LEAD 4	1	1				U
35	6G5–43144–00	HOOK, SPRING	1	1				
36	97095–06010	BOLT	1	1				
37	61A–43181–01	LEVER, TILT STOP	1	1				
38	6G5–43185–02	LEVER, TILT STOP	1	1				
39	90386–10M16	BUSH	4	4				
40	6G5–43148–10	COLLAR, DISTANCE	1	1				
41	90387–10M02	COLLAR	1	1				
42	91690–30020	PIN, SPRING	2	2				
43	90506–20011	SPRING, TENSION	1	1				
44	6E5–43126–02	PIN, UPPER SHOCK MOUNT	1	1				
45	90386–18M63	BUSH	2	2				
46	90386–18M14	BUSH	2	2				
47	93410–18M02	CIRCLIP	1	1				
48	90101–12M05	BOLT (L:130MM)	4	4				UR
	90101–12M77	BOLT (L:150MM)	2	2				UR
49	90201–13M01	WASHER, PLATE	8	8				
50	90201–12M05	WASHER, PLATE	4	4				
51	95380–12600	NUT	8	8				

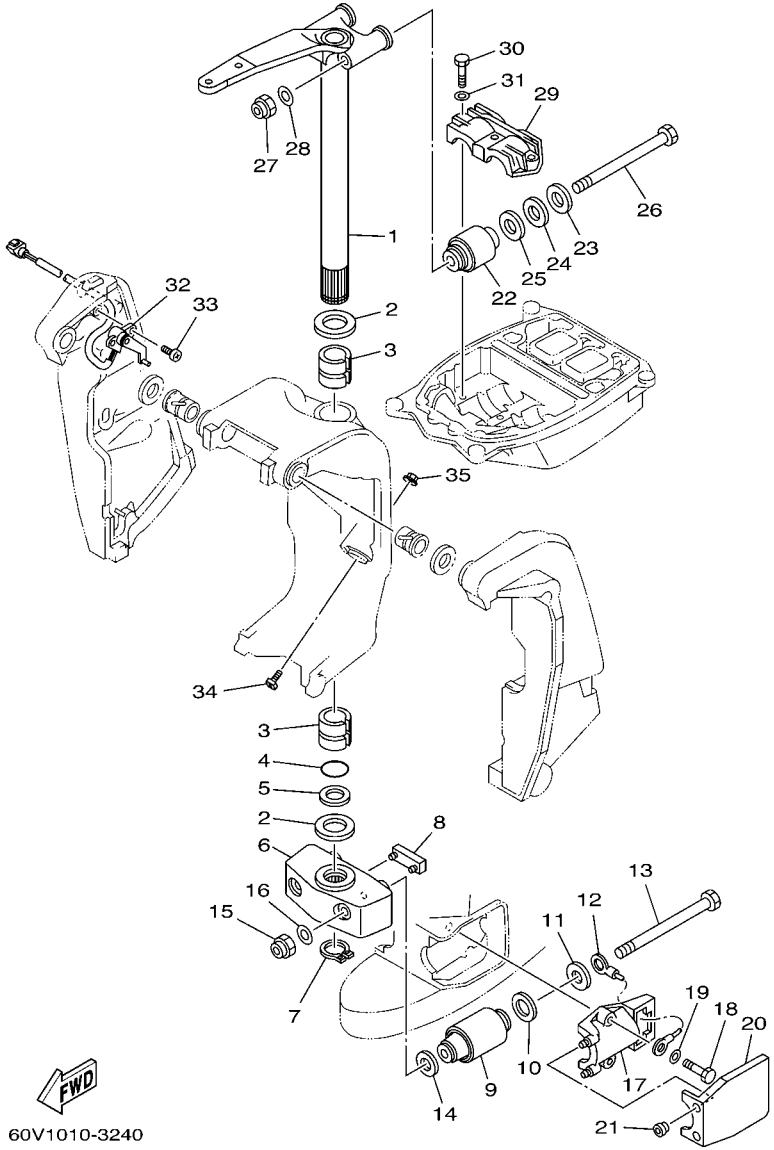

FIG. 26 BRACKET 2

REF. NO.	PART NO.	DESCRIPTION	6D01	6D11				REMARKS
1	60V–42510–20–8D	STEERING BRACKET ASSY	1	1				X
	60V–42510–30–8D	STEERING BRACKET ASSY	1	1				U
2	90201–40M00	WASHER, PLATE	2	2				
3	90386–39M89	BUSH	2	2				
4	93210–35321	O-RING	1	1				
5	90202–40M47	WASHER, PLATE	1	1				
6	61A–44551–01–8D	HOUSING, LOWER MOUNT RUBBER	1	1				
7	93410–37M04	CIRCLIP	1	1				
8	61A–44575–00	DAMPER, LOWER MOUNT RUBBER	1	1				
9	60V–44555–00–94	MOUNT DAMPER, LOWER SIDE	2	2				
10	90202–32M19	WASHER, PLATE	2	2				
11	90201–16M55	WASHER, PLATE	2	2				
12	6E5–82149–00	WIRE, LEAD 3	1	1				
13	90109–14M48	BOLT	2	2				
14	90201–15M58	WASHER, PLATE	2	2				
15	95380–14800	NUT	2	2				
16	92995–14600	WASHER	2	2				
17	61A–44552–01–94	HOUSING, LOWER MOUNT RUBBER	2	2				
18	97095–10045	BOLT	4	4				
19	92995–10600	WASHER	4	4				
20	61A–44553–00–8D	COVER, LOWER MOUNT	2	2				
21	6A0–15789–00	DAMPER	4	4				
22	60V–44514–00–94	MOUNT DAMPER, UPPER SIDE	2	2				
23	90201–16M01	WASHER, PLATE	2	2				
24	90202–28M46	WASHER, PLATE	2	2				
25	90201–28M01	WASHER, PLATE	2	2				
26	90109–14M10	BOLT	2	2				

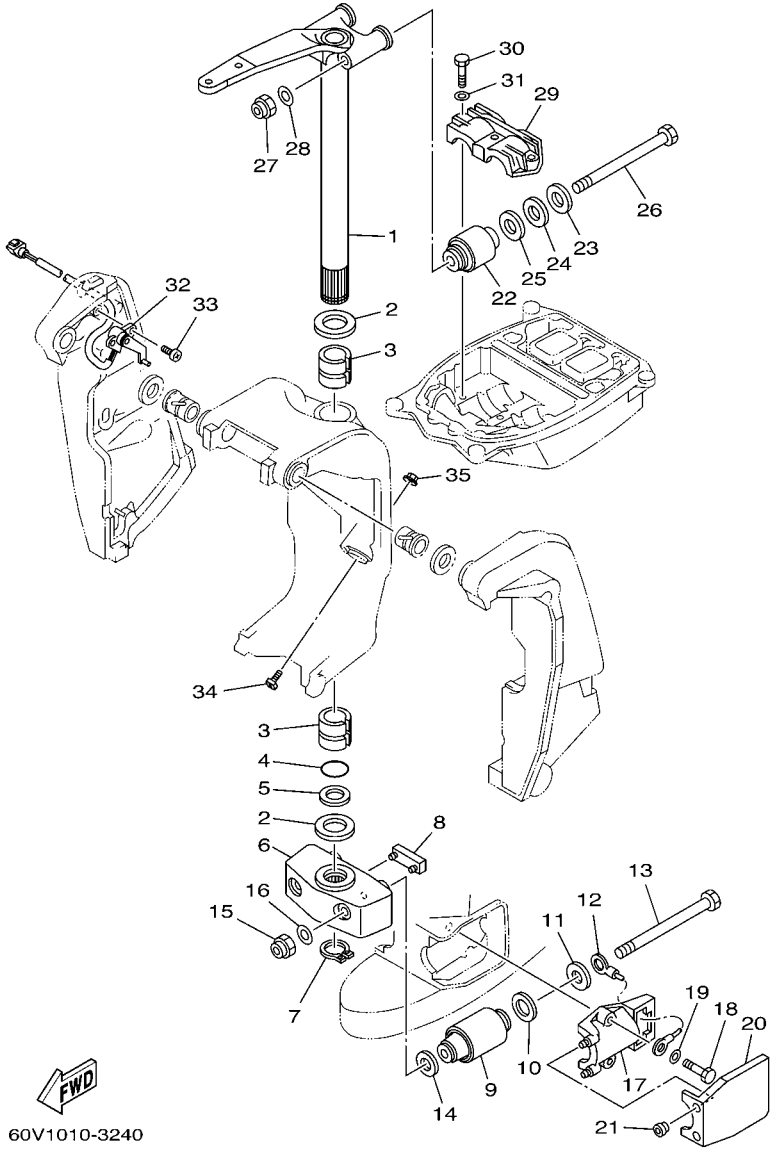

FIG. 26 BRACKET 2

REF. NO.	PART NO.	DESCRIPTION	6D01	6D11				REMARKS
27	90185–14M00	NUT, SELF-LOCKING	2	2				
28	92995–14600	WASHER	2	2				
29	61A–44511–00–94	COVER, UPPER MOUNT	1	1				
30	97095–10045	BOLT	3	3				
31	92995–10600	WASHER	3	3				
32	69J–83672–10	TRIM SENDER	1	1				FOR USA
	69J–83672–00	TRIM SENDER	1	1				FOR OCE
33	97885–06016	SCREW, PAN HEAD	2	2				
34	61A–43376–00	BOLT, THRUST RECEIVER	2	2				
35	95780–10300	NUT, FLANGE	2	2				

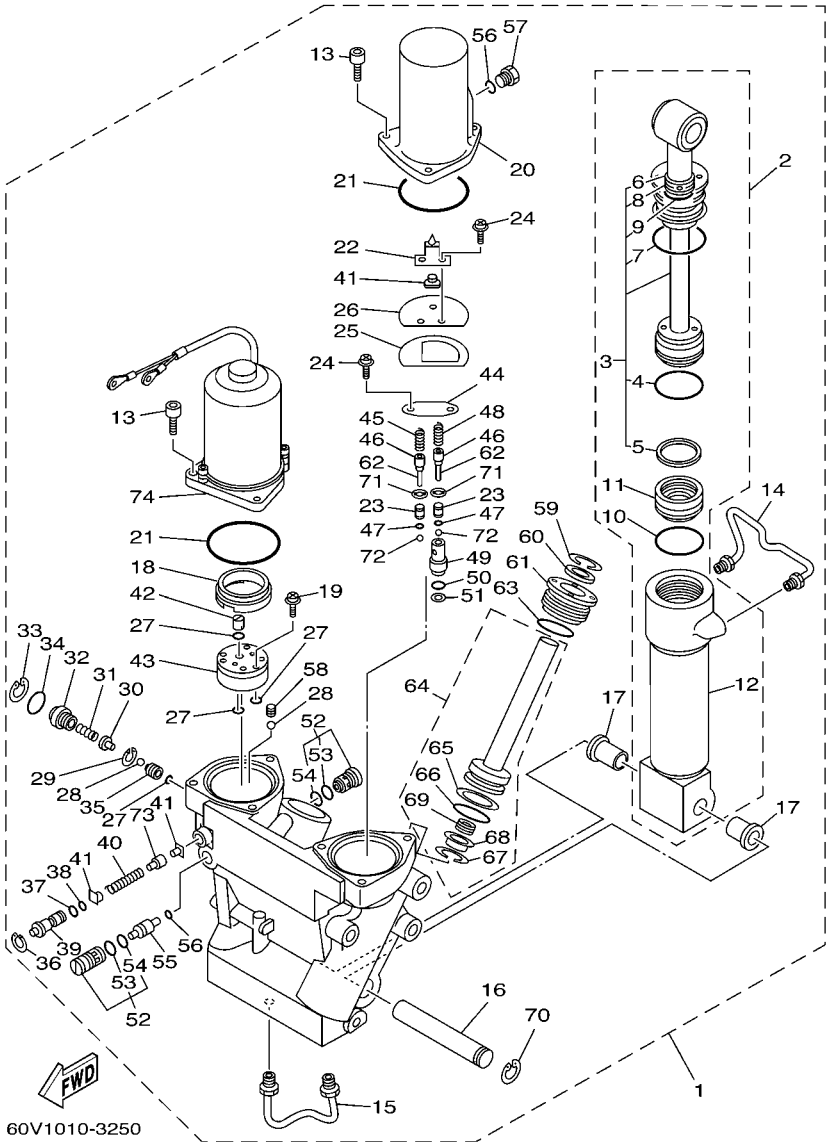

FIG. 27 POWER TRIM & TILT ASSY 1

REF. NO.	PART NO.	DESCRIPTION	6D01	6D11				REMARKS
1	60V–43800–00–4D	POWER TRIM & TILT ASSY	1	1				
2	61A–43840–01	.POWER TILT ASSY	1	1				
3	61A–43810–00	..TILT PISTON SUB ASSY	1	1				
4	61A–43861–00	...O-RING	1	1				
5	61A–43871–00	...RING, BACK UP	1	1				
6	93106–19N50	...OIL SEAL	1	1				
7	6H1–43861–00	...O-RING	1	1				
8	6H1–43872–00	...RING, BACK UP	1	1				
9	61A–4389H–00	...O-RING	1	1				
10	61A–43861–00	..O-RING	1	1				
11	6H1–43814–00	..PISTON, FREE	1	1				
12	61A–43813–01	..CYLINDER, TILT	1	1				
13	69J–43888–00	.BOLT, SOCKET	6	6				
14	61A–43835–01	.PIPE	1	1				
15	61A–43833–01	.PIPE	1	1				
16	61A–43818–00	.PIN, LOWER SHOCK MOUNT	1	1				
17	90386–18M14	.BUSH	2	2				
18	6H1–43817–00	.FILTER 2	1	1				
19	97607–04230	.SCREW,WITH WASHER	3	3				
20	69J–43828–00	.BODY, RESERVOIR	1	1				
21	6H1–43869–00	.O-RING	2	2				
22	61A–4384L–00	.SPRING, TRIM DOWN	1	1				
23	6T4–43851–00	.SEAT, RELIEF VALVE	2	2				
24	97607–05210	.SCREW,WITH WASHER	4	4				
25	61A–4384K–00	.PLATE, TRIM DOWN	1	1				
26	61A–4384J–00	.SEAL, TRIM DOWN	1	1				
27	93210–064A5	.O-RING	4	4				

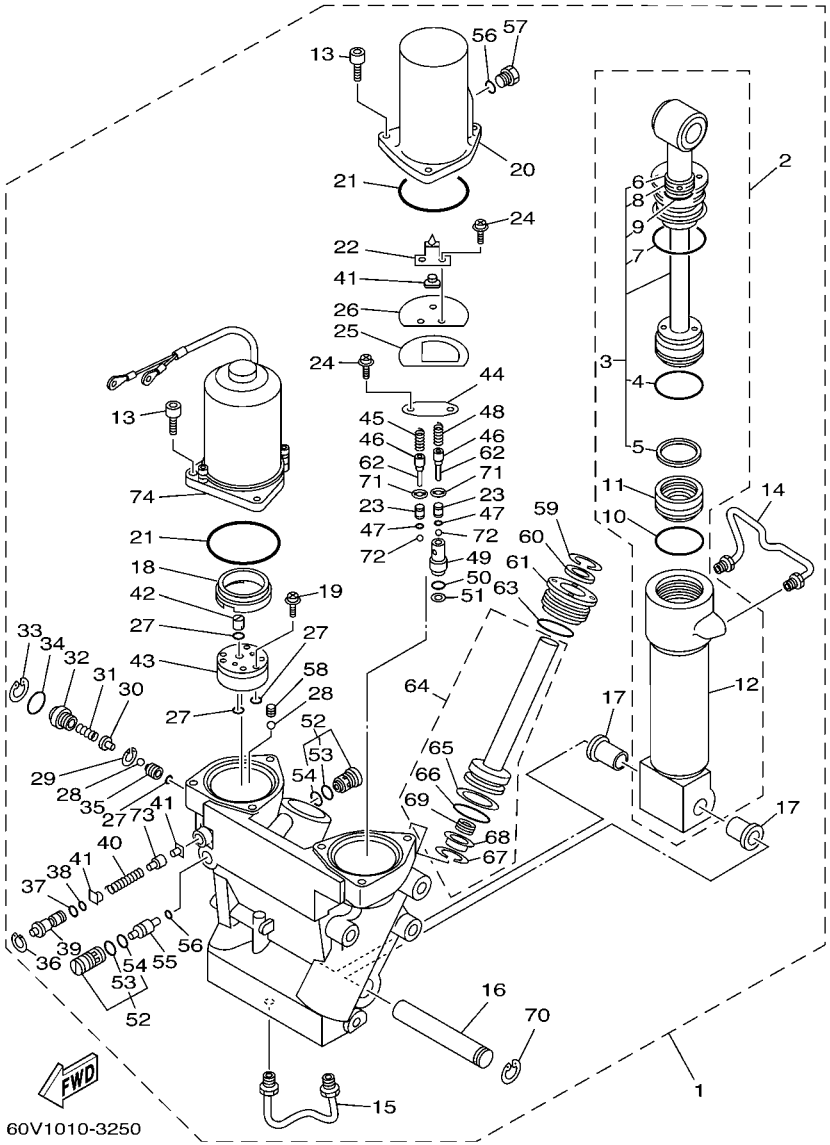

FIG. 27 POWER TRIM & TILT ASSY 1

REF. NO.	PART NO.	DESCRIPTION	6D01	6D11				REMARKS
28	93505–32038	.BALL	2	2				
29	61A–43875–00	.RING, SNAP	1	1				
30	61A–43848–00	.ROD, MANUAL RELEASE	1	1				
31	61A–43854–00	.SPRING, MANUAL RELEASE	1	1				
32	61A–43845–00	.SCREW, MANUAL RELEASE	1	1				
33	6H1–43875–00	.RING, SNAP	1	1				
34	93210–18397	.O-RING	1	1				
35	61A–43847–00	.SEAT, MANUAL VALVE	1	1				
36	6T4–43876–00	.RING, SNAP	1	1				
37	93210–07003	.O-RING	1	1				
38	93210–06001	.O-RING	1	1				
39	6T4–43849–00	.PIN, VALVE SUPPORT	1	1				
40	61A–4385H–00	.SPRING, SEAL	1	1				
41	61A–4384F–00	.SEAL, MAIN VALVE	3	3				
42	6H1–43831–00	.CONNECTOR, SHAFT	1	1				
43	6T4–43830–00	.GEAR PUMP ASSY	1	1				
44	61A–4382K–00	.CAP, RELIEF VALVE	1	1				
45	6H1–43856–10	.SPRING, DOWN RELIEF	1	1				
46	6T4–43844–00	.PIN, VALVE SUPPORT	2	2				
47	6T4–4384G–00	.SEAL, RELIEF VALVE	2	2				
48	6T4–43855–00	.SPRING, UP RELIEF	1	1				
49	6T4–43895–00	.SEAT, RELIEF VALVE	1	1				
50	93210–10M74	.O-RING	1	1				
51	6H1–43816–00	.FILTER 1	1	1				
52	6T4–43802–03	.VALVE SUB ASSY	2	2				
53	6H1–43866–00	..O-RING	1	1				
54	6H1–43867–00	..O-RING	1	1				

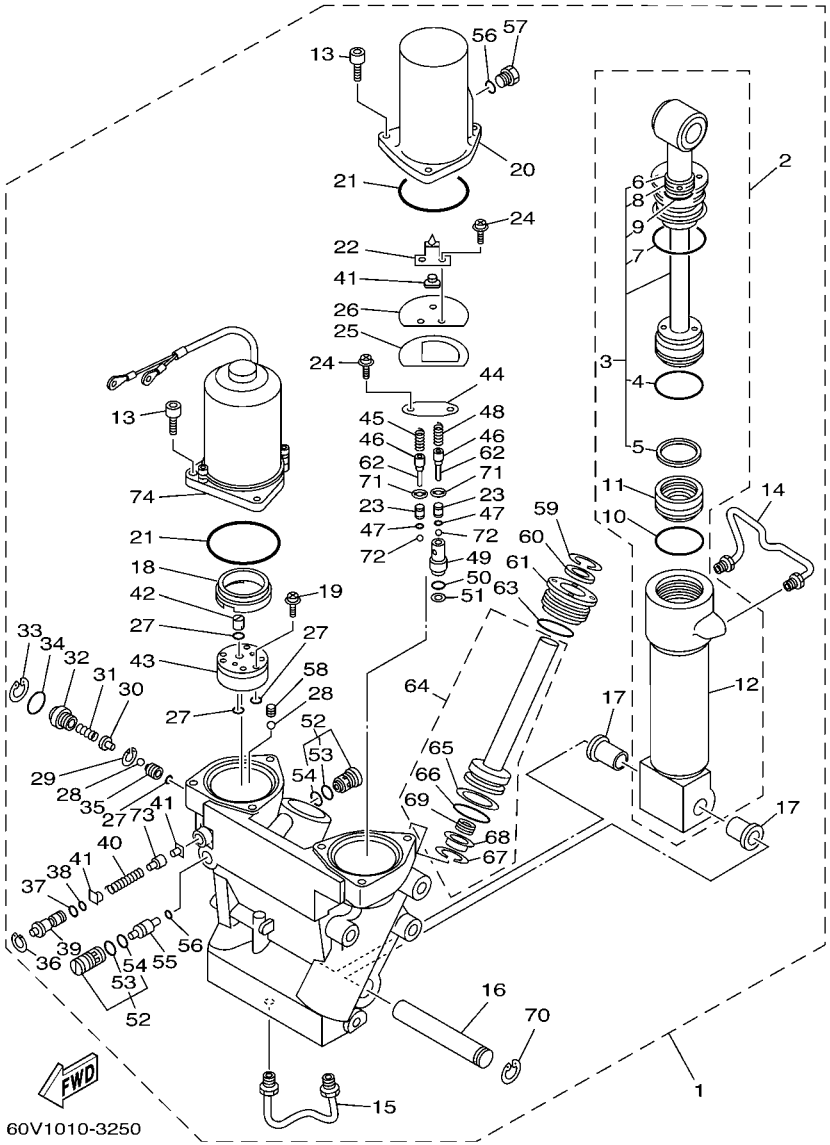

FIG. 27 POWER TRIM & TILT ASSY 1

REF. NO.	PART NO.	DESCRIPTION	6D01	6D11				REMARKS
55	6T4–43841–00	.PISTON, SHUTTLE	1	1				
56	93210–09165	.O-RING	2	2				
57	6H1–43829–00	.PLUG, RESERVOIR	1	1				
58	61A–43878–00	.BOLT, SOCKET	1	1				
59	6T4–43875–01	.RING, SNAP	2	2				
60	61A–43822–00	.SEAL, TRIM DUST	2	2				
61	61A–43821–00	.SCREW, TRIM CYLINDER END	2	2				
62	91609–10014	.PIN, SPRING	2	2				
63	61A–43861–00	.O-RING	2	2				
64	61A–43820–10	.TRIM PISTON SUB ASSY	2	2				
65	61A–43874–00	..RING, BACK UP	1	1				
66	61A–43864–00	..O-RING	1	1				
67	61A–43875–10	..RING, SNAP	1	1				
68	61A–4383H–11	..HOSE, OIL 5	1	1				
69	61A–4384H–10	..SPRING	1	1				
70	61A–43876–00	.RING, SNAP	1	1				
71	6T4–43893–00	.WASHER	2	2				
72	93501–08001	.BALL	2	2				
73	61A–4382A–00	.ADAPTOR 1	1	1				
74	69J–43880–00	.MOTOR ASSY	1	1				REFER TO FIG.28

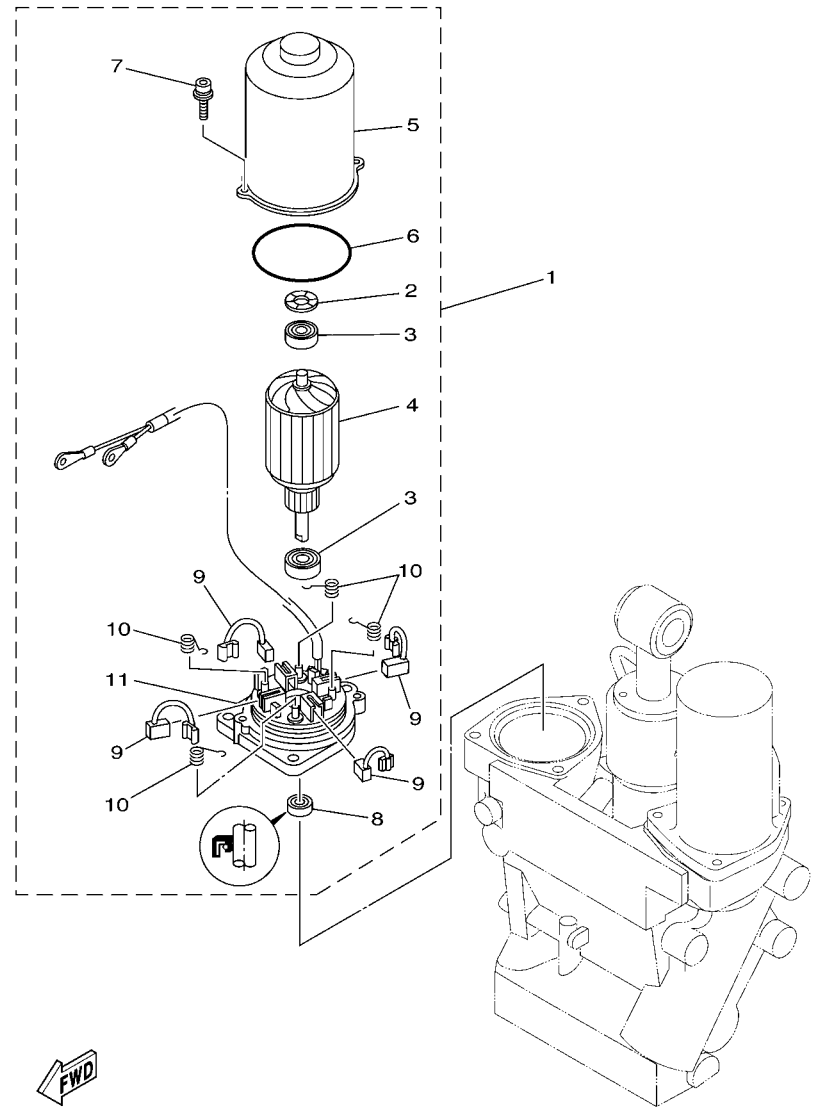

60V1010-3260

FIG. 28 POWER TRIM & TILT ASSY 2

REF. NO.	PART NO.	DESCRIPTION	6D01	6D11				REMARKS
1	69J–43880–00	MOTOR ASSY	1	1				
2	90206–14N50	.WASHER, WAVE	1	1				
3	93399–999T6	.BEARING	2	2				
4	69J–43805–00	.ARMATURE ASSY	1	1				
5	69J–43804–00	.STATOR ASSY	1	1				
6	69J–43861–00	.O-RING	1	1				
7	69J–43886–00	.BOLT	2	2				
8	69J–43882–00	.OIL SEAL	1	1				
9	69J–43891–00	.BRUSH 1	4	4				
10	69J–4386K–00	.SPRING, BRUSH	4	4				
11	69J–43881–00	.FRAME, END	1	1				

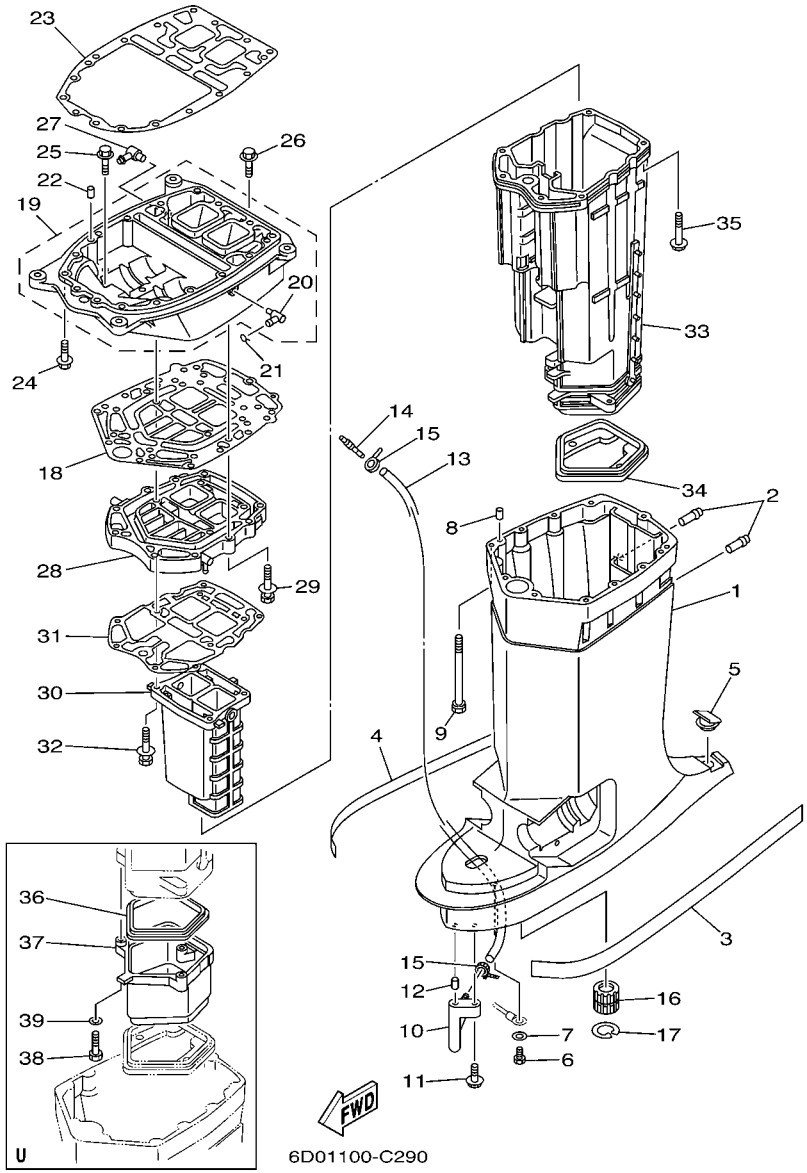

FIG. 29 UPPER CASING

REF. NO.	PART NO.	DESCRIPTION	6D01	6D11				REMARKS
1	6D0–45111–20–8D	CASING, UPPER	1	1				X
	6D0–45111–30–8D	CASING, UPPER	1	1				U
2	6E5–24377–00	PIPE, JOINT 3	2	2				
3	61A–42791–S0	MARK 1	1	1				
4	61A–42792–S0	MARK	1	1				
5	61A–45155–00	CAP	1	1				
6	97095–06010	BOLT	1	1				
7	92995–06600	WASHER	1	1				
8	93608–12M05	PIN, DOWEL	2	2				
9	90119–08052	BOLT, WITH WASHER	8	8				
10	61A–45378–00	NIPPLE, HOSE	1	1				
11	90119–06M17	BOLT, WITH WASHER	1	1				
12	93606–12019	PIN, DOWEL	1	1				
13	90445–07MF0	HOSE (L1030)	1	1				X
	90445–07M21	HOSE (L1160)	1	1				U
14	6E5–83558–00	END, NIPPLE	1	1				
15	90465–11M10	CLAMP	2	2				
16	6E5–45318–00	BUSHING, DRIVE SHAFT	1	1				
17	93420–36M01	CIRCLIP	1	1				
18	60V–45114–00	GASKET, UPPER CASING	1	1				
19	6D0–41137–00–94	GUIDE, EXHAUST	1	1				
20	676–11372–00	.NIPPLE, HOSE	1	1				
21	90467–08M10	CLIP	1	1				
22	93608–12M05	PIN, DOWEL	2	2				
23	60V–45113–01	GASKET, UPPER CASING	1	1				
24	90119–08068	BOLT, WITH WASHER	4	4				
25	90119–08072	BOLT, WITH WASHER	4	4				

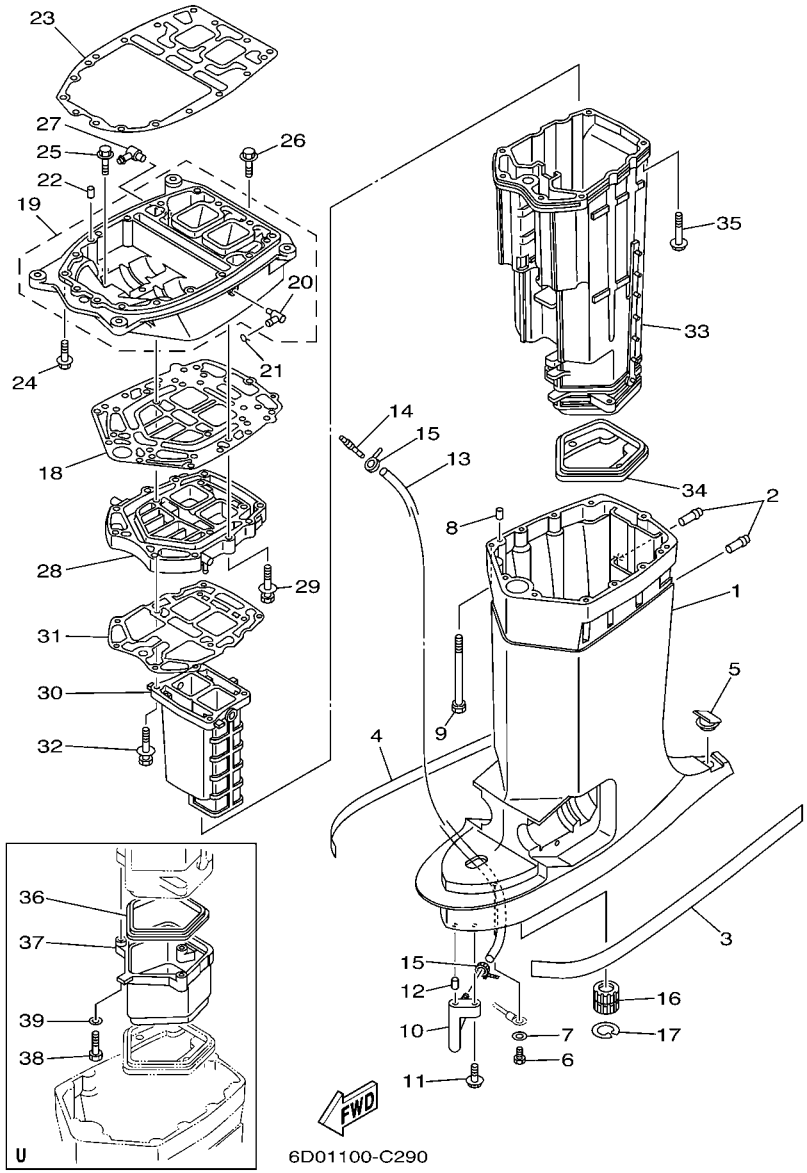

FIG. 29 UPPER CASING

REF. NO.	PART NO.	DESCRIPTION	6D01	6D11				REMARKS
26	90119–08060	BOLT, WITH WASHER	1	1				
27	6H1–11372–00	NIPPLE, HOSE	1	1				
28	6D0–41131–00–5B	MANIFOLD, EXT. 1	1	1				
29	90119–08056	BOLT, WITH WASHER	4	4				
30	6D0–41132–00–5B	MANIFOLD, EXHAUST	1	1				
31	61A–41134–A0	GASKET, EXHAUST MANIFOLD	1	1				
32	90119–08059	BOLT, WITH WASHER	4	4				
33	6D0–14711–20–5B	MUFFLER 1	1	1				X
	60V–14711–20–5B	MUFFLER 1	1	1				U
34	6D0–45123–00	GASKET, MUFFLER	1	1				
35	90119–08059	BOLT, WITH WASHER	6	6				
36	61A–45123–01	GASKET, MUFFLER	1	1				U
37	6D0–14721–30–5B	MUFFLER 2	1	1				U
38	97095–06035	BOLT	3	3				U
39	92995–06600	WASHER	3	3				U

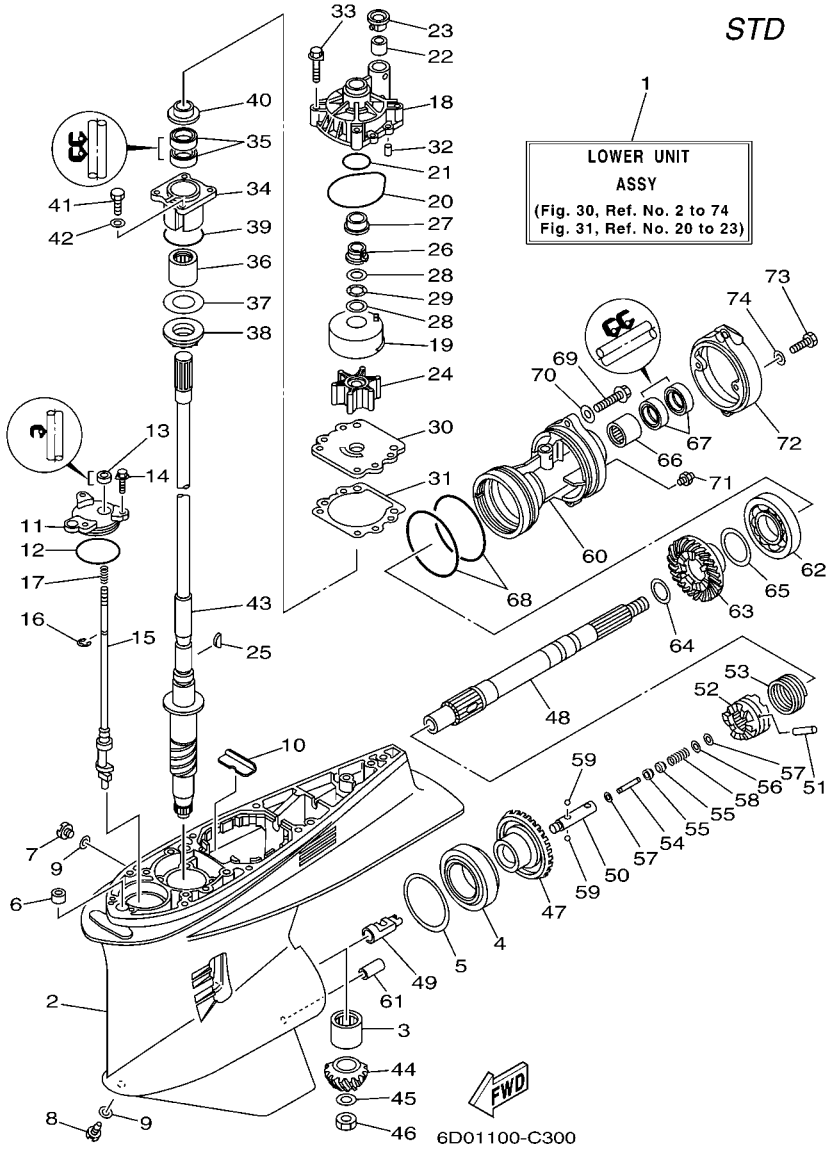

FIG. 30 LOWER CASING & DRIVE 1

REF. NO.	PART NO.	DESCRIPTION	6D01	6D11				REMARKS
1	6D0–45300–20–8D	LOWER UNIT ASSY	1					X
	6D0–45300–30–8D	LOWER UNIT ASSY	1					U
2	6D0–45301–00–8D	CASING, LOWER	1					
3	93311–83280	BEARING	1					
4	93332–000W1	BEARING	1					
5	61A–45567–00–10	SHIM (T:0.10MM)	1					UR
	61A–45567–00–12	SHIM (T:0.12MM)	1					UR
	61A–45567–00–15	SHIM (T:0.15MM)	1					UR
	61A–45567–00–18	SHIM (T:0.18MM)	1					UR
	61A–45567–00–30	SHIM (T:0.30MM)	1					UR
	61A–45567–00–40	SHIM (T:0.40MM)	1					UR
	61A–45567–00–50	SHIM (T:0.50MM)	1					UR
6	663–44366–00	DAMPER, WATER SEAL	1					
7	90340–08002	PLUG, STRAIGHT SCREW	1					
8	688–45341–10	PLUG, DRAIN	1					
9	90430–08020	GASKET	2					
10	61A–45376–00–94	GUIDE, SEAL DAMPER	1					
11	61A–45321–01	PLATE	1					
12	93210–64488	O-RING	1					
13	93106–09014	OIL SEAL	1					
14	90119–06M10	BOLT, WITH WASHER	3					
15	60V–44150–00	SHIFT CAM ASSY	1					
16	99001–08600	CIRCLIP	1					
17	90501–11M10	SPRING, COMPRESSION	1					
18	61A–44311–01	HOUSING, WATER PUMP	1					
19	61A–44322–02	INSERT, CARTRIDGE	1					
20	93210–86M38	O-RING	1					

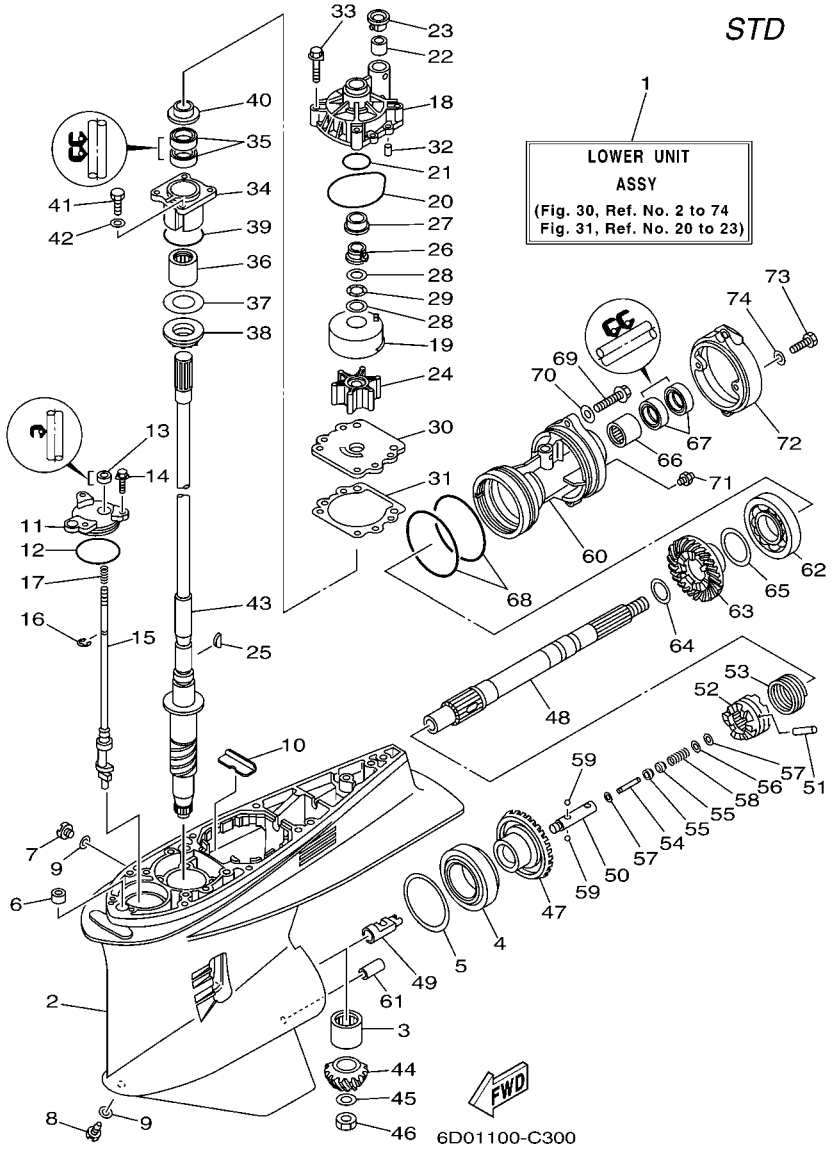

FIG. 30 LOWER CASING & DRIVE 1

REF. NO.	PART NO.	DESCRIPTION	6D01	6D11				REMARKS
21	93210–37160	O-RING	1					
22	6E5–44365–00	DAMPER, WATER SEAL	1					
23	6E5–44312–00	COVER, WATER PUMP HOUSING	1					
24	6E5–44352–01	IMPELLER	1					
25	90280–04M05	KEY, WOODRUFF	1					
26	61A–45538–00	SPACER 1	1					
27	61A–45527–00	COLLAR, DRIVE SHAFT	1					
28	90201–22M01	WASHER, PLATE	2					
29	90206–22M19	WASHER, WAVE	1					
30	6G5–44323–00	OUTER PLATE, CARTRIDGE	1					
31	6E5–44315–A0	GASKET, WATER PUMP	1					
32	93606–12019	PIN, DOWEL	2					
33	90119–08M14	BOLT, WITH WASHER	4					
34	61A–45331–00–94	HOUSING, BEARING	1					
35	93101–28M16	OIL SEAL	2					
36	93317–330U2	BEARING	1					
37	61A–45587–00–10	SHIM (T:0.10MM)	1					UR
	61A–45587–00–12	SHIM (T:0.12MM)	1					UR
	61A–45587–00–15	SHIM (T:0.15MM)	1					UR
	61A–45587–00–18	SHIM (T:0.18MM)	1					UR
	61A–45587–00–30	SHIM (T:0.30MM)	1					UR
	61A–45587–00–40	SHIM (T:0.40MM)	1					UR
	61A–45587–00–50	SHIM (T:0.50MM)	1					UR
38	93341–930U9	BEARING	1					
39	93210–55M14	O-RING	1					
40	6E5–45344–00	COVER, OIL SEAL	1					
41	97095–08025	BOLT	4					

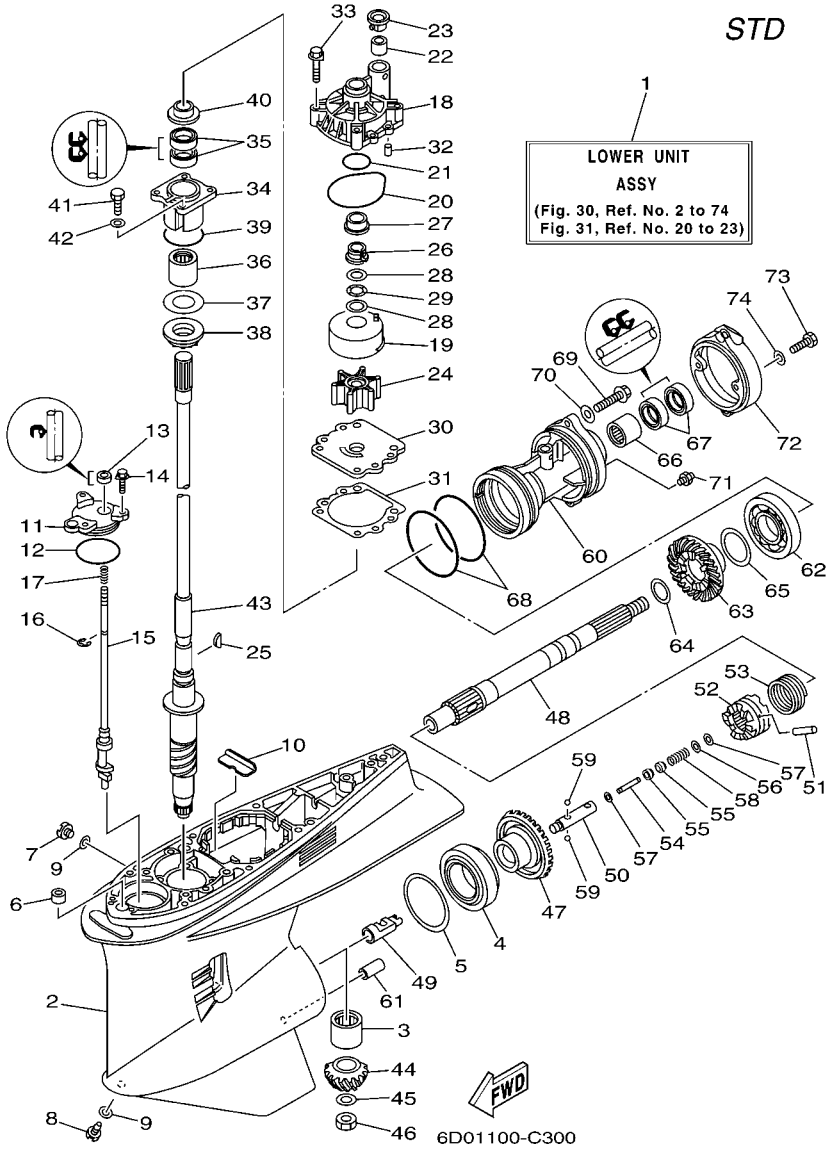

FIG. 30 LOWER CASING & DRIVE 1

REF. NO.	PART NO.	DESCRIPTION	6D01	6D11				REMARKS
42	92995–08600	WASHER	4					
43	60V–45501–20	DRIVE SHAFT COMP.	1					X
	60V–45501–30	DRIVE SHAFT COMP.	1					U
44	60X–45551–00	PINION	1					
45	90201–16M00	WASHER, PLATE	1					
46	90170–16M19	NUT	1					
47	60X–45560–00	GEAR	1					
48	60V–45611–00	SHAFT, PROPELLER	1					
49	61A–45641–02	SHIFTER	1					
50	61A–45634–01	SLIDE, SHIFT	1					
51	61A–45632–00	PIN, CROSS	1					
52	60V–45631–00	CLUTCH, DOG	1					
53	61A–45633–00	RING, CROSS PIN	1					
54	6H1–45668–00	SHAFT, FREE	1					
55	61A–45635–00	PLUNGER, SHIFT	2					
56	90201–02M00	WASHER, PLATE	1					
57	90183–02M03	NUT, SPRING	2					
58	90501–10M77	SPRING, COMPRESSION	1					
59	93501–04011	BALL	2					
60	6D0–45332–00–94	HOUSING, BEARING	1					
61	99590–10114	PIN, DOWEL	1					
62	93306–210U0	BEARING	1					
63	69L–45571–00	GEAR	1					
64	90201–31M00	WASHER, PLATE	1					
65	61A–45577–00–10	SHIM (T:0.10MM)	1					UR
	61A–45577–00–12	SHIM (T:0.12MM)	1					UR
	61A–45577–00–15	SHIM (T:0.15MM)	1					UR

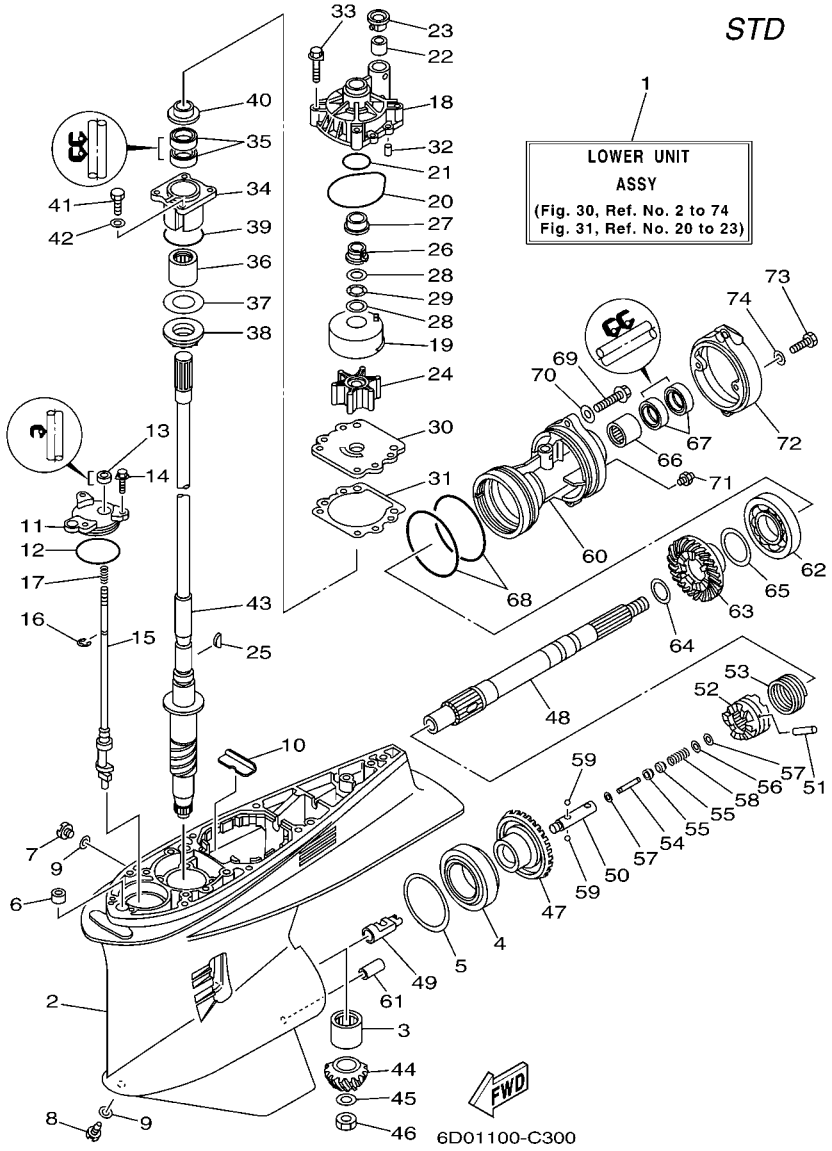

FIG. 30 LOWER CASING & DRIVE 1

REF. NO.	PART NO.	DESCRIPTION	6D01	6D11				REMARKS
65	61A–45577–00–18	SHIM (T:0.18MM)	1					UR
	61A–45577–00–30	SHIM (T:0.30MM)	1					UR
	61A–45577–00–40	SHIM (T:0.40MM)	1					UR
	61A–45577–00–50	SHIM (T:0.50MM)	1					UR
66	93315–43064	BEARING	1					
67	93101–30002	OIL SEAL	2					
68	93211–04384	O-RING	2					
69	90105–08049	BOLT, FLANGE	2					
70	90201–08023	WASHER, PLATE	2					
71	93700–09M00	NIPPLE, GREASE	1					
72	6D0–45361–00–8D	CAP, LOWER CASING	1					
73	97095–08020	BOLT	2					
74	92995–08600	WASHER	2					

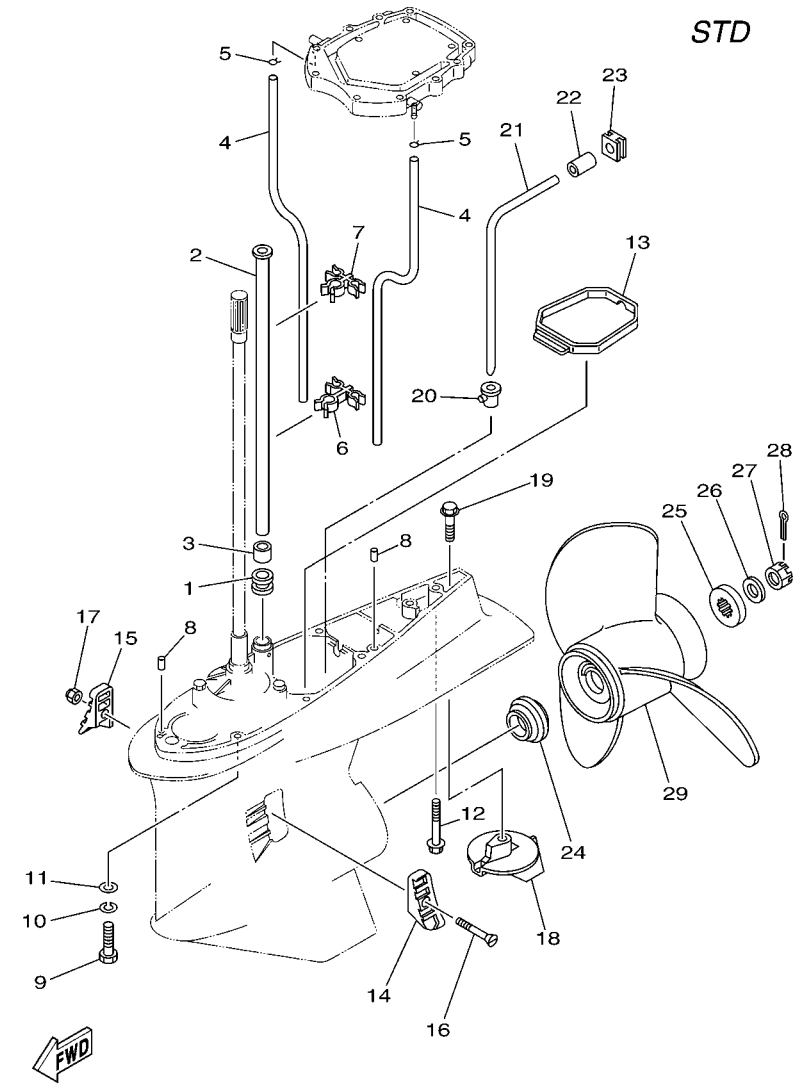

FIG. 31 LOWER CASING & DRIVE 2

REF. NO.	PART NO.	DESCRIPTION	6D01	6D11				REMARKS
1	6E5–44366–00	DAMPER, WATER SEAL	1					
2	61A–44361–20	TUBE, WATER	1					X
	61A–44361–30	TUBE, WATER	1					U
3	6E5–44365–00	DAMPER, WATER SEAL	1					
4	90445–09111	HOSE (L430)	2					X
	90445–09024	HOSE (L485)	2					U
5	90467–08M10	CLIP	2					
6	90464–15006	CLAMP	1					
7	90464–15005	CLAMP	1					
8	93608–12M05	PIN, DOWEL	2					
9	97095–10045	BOLT	7					
10	92995–10100	WASHER	7					
11	92995–10600	WASHER	7					
12	90119–10MA2	BOLT, WITH WASHER	1					
13	6D0–45375–00	DAMPER, SEAL	1					
14	61A–45214–10	COVER, WATER INLET	1					
15	61A–45215–10	COVER, WATER INLET	1					
16	90152–05003	SCREW, COUNTERSUNK	1					
17	90185–05002	NUT, SELF-LOCKING	1					
18	69L–45371–00	TAB-TRIM	1					
19	90105–10M00	BOLT, FLANGE	1					
20	6D0–44367–00	DAMPER, WATER SEAL	1					
21	6D0–44362–00	TUBE, WATER	1					
22	6D0–44365–00	DAMPER, WATER SEAL	1					
23	6D0–44366–00	DAMPER, WATER SEAL	1					
24	69J–45987–00	SPACER	1					
25	688–45997–01	SPACER	1					

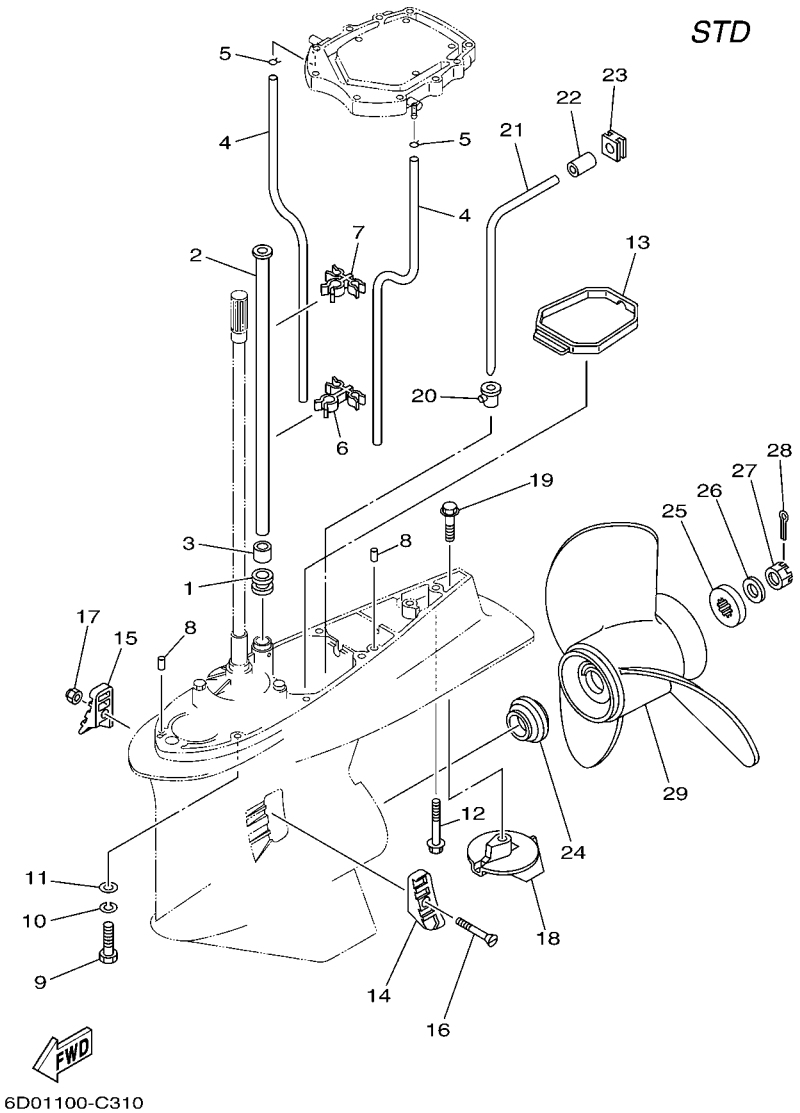

FIG. 31 LOWER CASING & DRIVE 2

REF. NO.	PART NO.	DESCRIPTION	6D01	6D11				REMARKS
26	92990–18200	WASHER	1					
27	90171–18M04	NUT, CASTLE	1					
28	91490–40030	PIN, COTTER	1					
29	6G5–45970–02–98	PROPELLER (3X15-1/4"X15"-M)	1					UR
	6G5–45972–02–98	PROPELLER (3X13-3/4"X21"-M)	1					UR
	6G5–45974–03–98	PROPELLER (3X13-3/4"X19"-M2)	1					UR
	6G5–45978–03–98	PROPELLER (3X13-3/4"X17"-M2)	1					UR
	61A–45972–00–98	PROPELLER (3X14-1/2"X21"-T)	1					UR
	61A–45974–00–98	PROPELLER (3X14-1/2"X19"-T)	1					UR
	61A–45978–00–98	PROPELLER (3X15"X17"-T)	1					UR
	6R4–45970–A0	PROPELLER (3X15-1/4"X19"-M)	1					UR
	6R4–45972–A0	PROPELLER (3X14-7/8"X21"-M)	1					UR
	6R4–45974–A0	PROPELLER (3X14-1/2"X23"-M)	1					UR
	6R4–45976–A0	PROPELLER (3X14-1/2"X15"-M)	1					UR
	6R4–45978–A0	PROPELLER (3X15-1/4"X17"-M)	1					UR

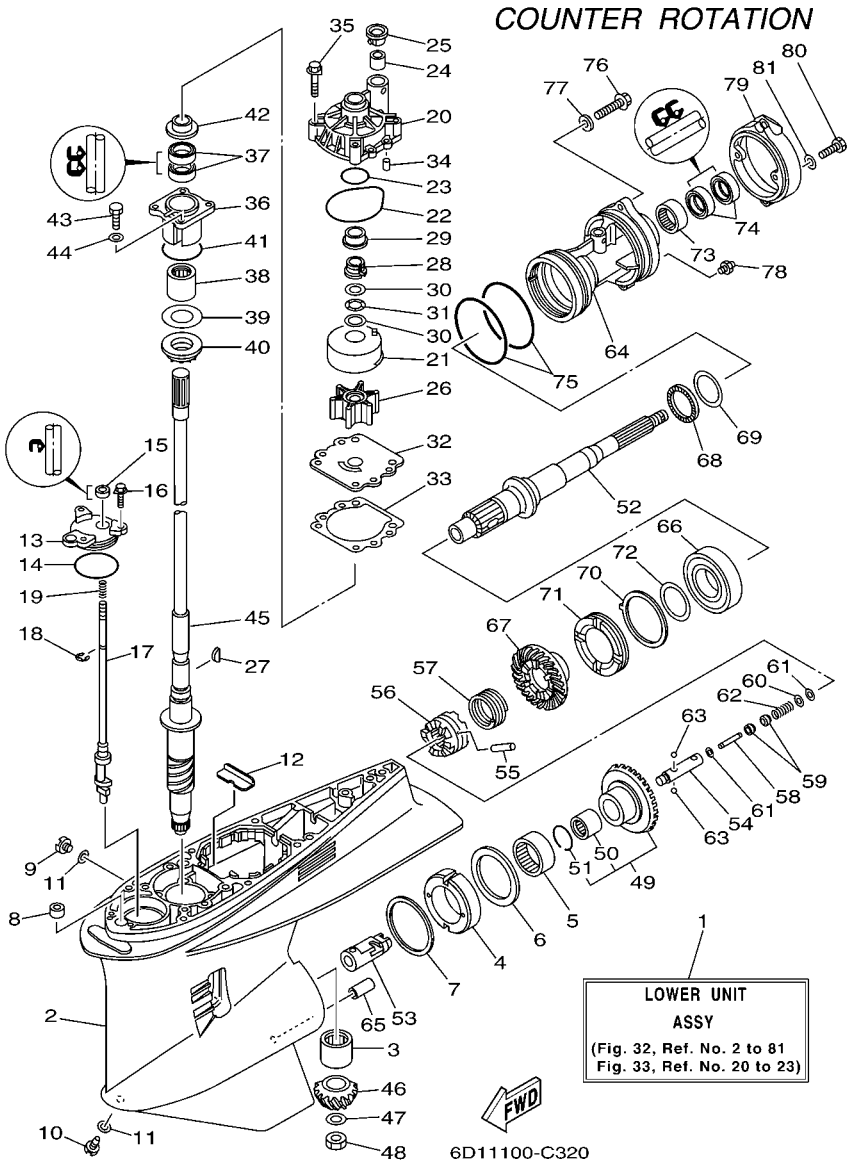

FIG. 32 LOWER CASING & DRIVE 3

REF. NO.	PART NO.	DESCRIPTION	6D01	6D11				REMARKS
1	6D1–45300–20–8D	LOWER UNIT ASSY		1				X
	6D1–45300–30–8D	LOWER UNIT ASSY		1				U
2	6D0–45301–00–8D	CASING, LOWER		1				
3	93311–83280	BEARING		1				
4	61B–45538–01	SPACER 1		1				
5	93315–660W3	BEARING		1				
6	93341–670V0	BEARING		1				
7	61A–45567–00–10	SHIM (T:0.10MM)		1				UR
	61A–45567–00–12	SHIM (T:0.12MM)		1				UR
	61A–45567–00–15	SHIM (T:0.15MM)		1				UR
	61A–45567–00–18	SHIM (T:0.18MM)		1				UR
	61A–45567–00–30	SHIM (T:0.30MM)		1				UR
	61A–45567–00–40	SHIM (T:0.40MM)		1				UR
	61A–45567–00–50	SHIM (T:0.50MM)		1				UR
8	663–44366–00	DAMPER, WATER SEAL		1				
9	90340–08002	PLUG, STRAIGHT SCREW		1				
10	688–45341–10	PLUG, DRAIN		1				
11	90430–08020	GASKET		2				
12	61A–45376–00–94	GUIDE, SEAL DAMPER		1				
13	61A–45321–01	PLATE		1				
14	93210–64488	O-RING		1				
15	93106–09014	OIL SEAL		1				
16	90119–06M10	BOLT, WITH WASHER		3				
17	60W–44150–00	SHIFT CAM ASSY		1				
18	99001–08600	CIRCLIP		1				
19	90501–11M10	SPRING, COMPRESSION		1				
20	61A–44311–01	HOUSING, WATER PUMP		1				

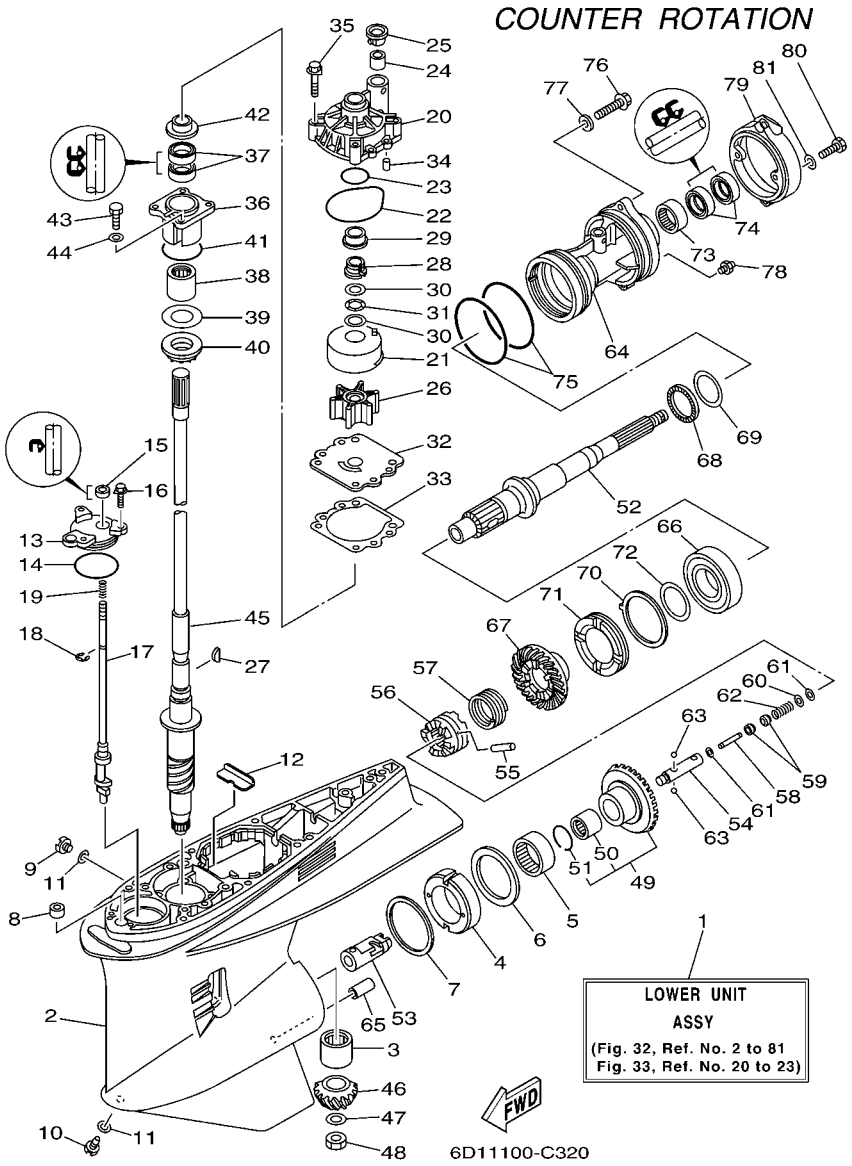

FIG. 32 LOWER CASING & DRIVE 3

REF. NO.	PART NO.	DESCRIPTION	6D01	6D11				REMARKS
21	61A–44322–02	INSERT, CARTRIDGE		1				
22	93210–86M38	O-RING		1				
23	93210–37160	O-RING		1				
24	6E5–44365–00	DAMPER, WATER SEAL		1				
25	6E5–44312–00	COVER, WATER PUMP HOUSING		1				
26	6E5–44352–01	IMPELLER		1				
27	90280–04M05	KEY, WOODRUFF		1				
28	61A–45538–00	SPACER 1		1				
29	61A–45527–00	COLLAR, DRIVE SHAFT		1				
30	90201–22M01	WASHER, PLATE		2				
31	90206–22M19	WASHER, WAVE		1				
32	6G5–44323–00	OUTER PLATE, CARTRIDGE		1				
33	6E5–44315–A0	GASKET, WATER PUMP		1				
34	93606–12019	PIN, DOWEL		2				
35	90119–08M14	BOLT, WITH WASHER		4				
36	61A–45331–00–94	HOUSING, BEARING		1				
37	93101–28M16	OIL SEAL		2				
38	93317–330U2	BEARING		1				
39	61A–45587–00–10	SHIM (T:0.10MM)		1				UR
	61A–45587–00–12	SHIM (T:0.12MM)		1				UR
	61A–45587–00–15	SHIM (T:0.15MM)		1				UR
	61A–45587–00–18	SHIM (T:0.18MM)		1				UR
	61A–45587–00–30	SHIM (T:0.30MM)		1				UR
	61A–45587–00–40	SHIM (T:0.40MM)		1				UR
	61A–45587–00–50	SHIM (T:0.50MM)		1				UR
40	93341–930U9	BEARING		1				
41	93210–55M14	O-RING		1				

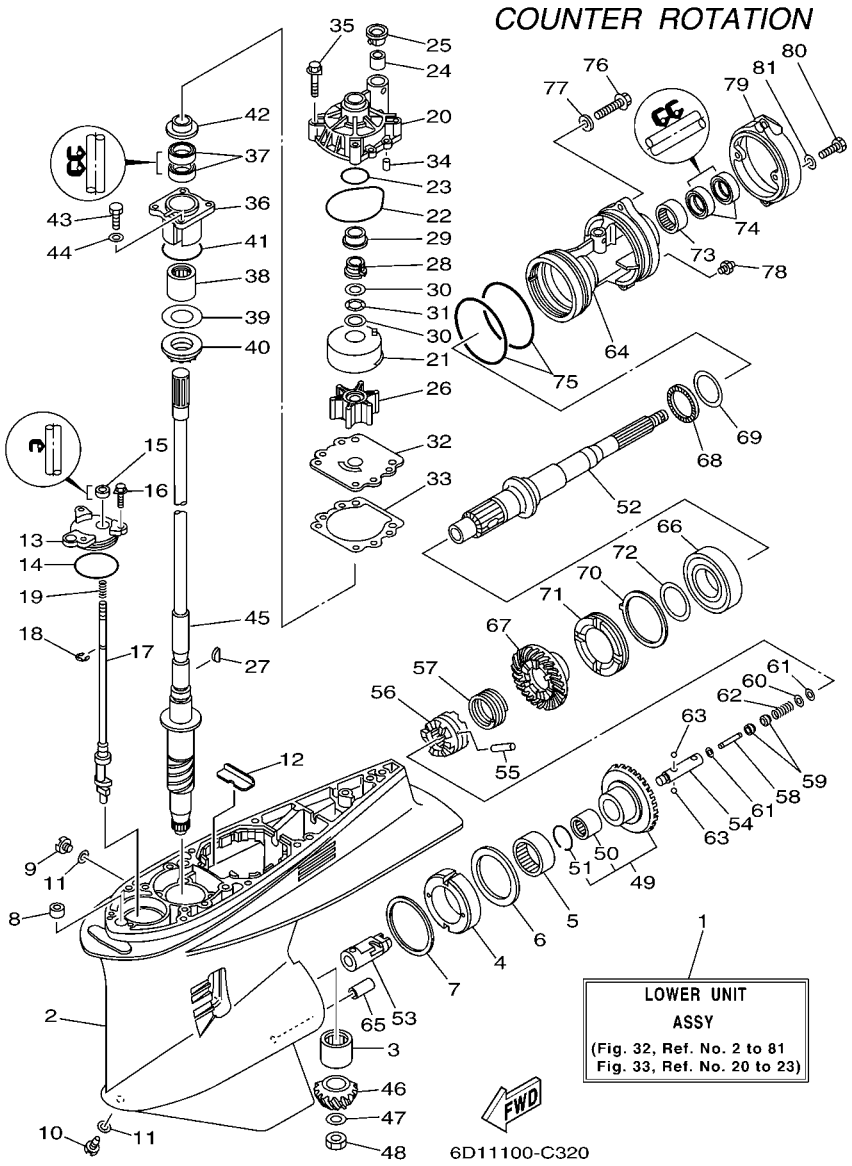

FIG. 32 LOWER CASING & DRIVE 3

REF. NO.	PART NO.	DESCRIPTION	6D01	6D11				REMARKS
42	6E5–45344–00	COVER, OIL SEAL		1				
43	97095–08025	BOLT		4				
44	92995–08600	WASHER		4				
45	60V–45501–20	DRIVE SHAFT COMP.		1				X
	60V–45501–30	DRIVE SHAFT COMP.		1				U
46	60X–45551–00	PINION		1				
47	90201–16M00	WASHER, PLATE		1				
48	90170–16M19	NUT		1				
49	6D1–45560–00	GEAR		1				
50	93317–62891	.BEARING		1				
51	93450–37097	.CIRCLIP		1				
52	69K–45611–00	SHAFT, PROPELLER		1				
53	61B–45641–01	SHIFTER		1				
54	61A–45634–01	SLIDE, SHIFT		1				
55	61A–45632–00	PIN, CROSS		1				
56	60V–45631–00	CLUTCH, DOG		1				
57	61A–45633–00	RING, CROSS PIN		1				
58	6H1–45668–00	SHAFT, FREE		1				
59	61A–45635–00	PLUNGER, SHIFT		2				
60	90201–02M00	WASHER, PLATE		1				
61	90183–02M03	NUT, SPRING		2				
62	90501–10M77	SPRING, COMPRESSION		1				
63	93501–04011	BALL		2				
64	6D1–45332–00–94	HOUSING, BEARING		1				
65	99590–10114	PIN, DOWEL		1				
66	93332–00048	BEARING		1				
67	6D1–45571–00	GEAR		1				

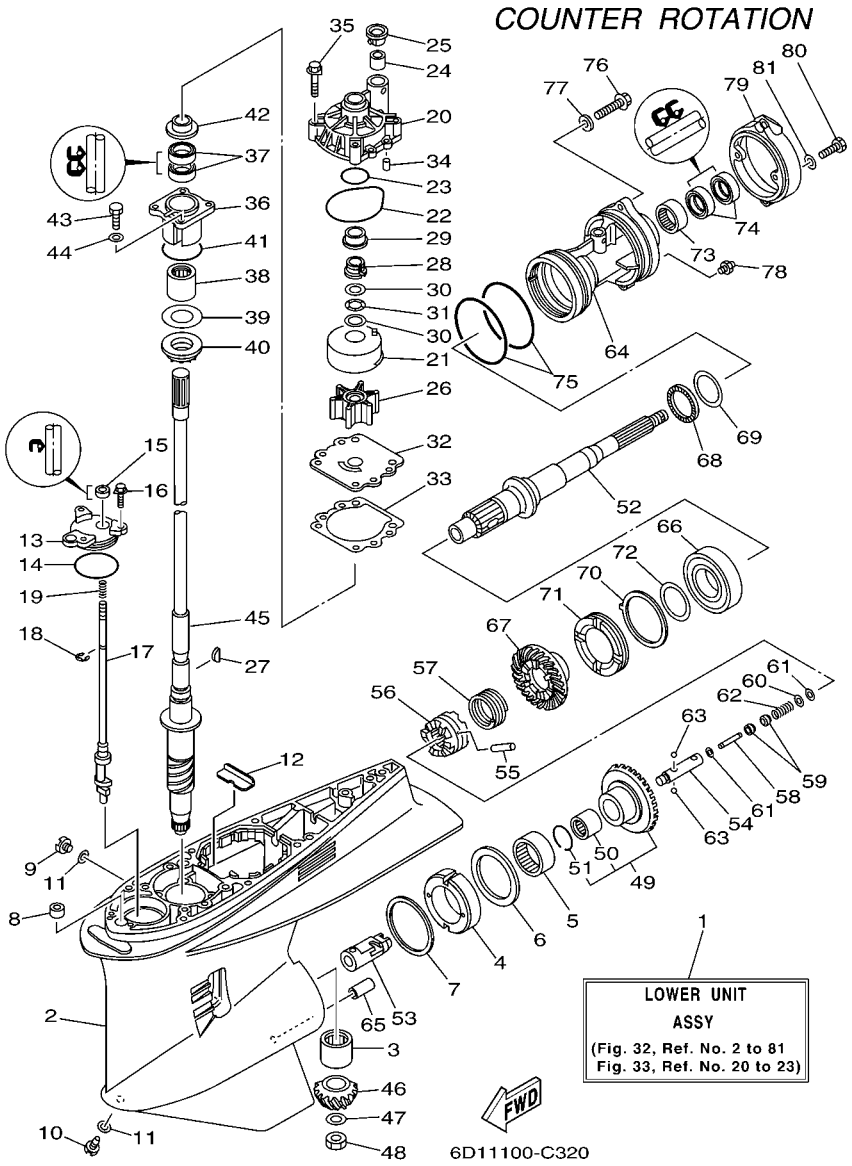

FIG. 32 LOWER CASING & DRIVE 3

REF. NO.	PART NO.	DESCRIPTION	6D01	6D11				REMARKS
68	93341–440U5	BEARING		1				
69	6K1–45578–01–10	SHIM (T:0.10MM)		1				UR
	6K1–45578–01–12	SHIM (T:0.12MM)		1				UR
	6K1–45578–01–15	SHIM (T:0.15MM)		1				UR
	6K1–45578–01–18	SHIM (T:0.18MM)		1				UR
	6K1–45578–01–30	SHIM (T:0.30MM)		1				UR
	6K1–45578–01–40	SHIM (T:0.40MM)		1				UR
	6K1–45578–01–50	SHIM (T:0.50MM)		1				UR
70	61B–45383–00	WASHER, CLAW		1				
71	69K–45384–00	NUT		1				
72	69K–45577–00	SHIM (T:0.10MM)		1				UR
	69K–45577–10	SHIM (T:0.12MM)		1				UR
	69K–45577–20	SHIM (T:0.15MM)		1				UR
	69K–45577–30	SHIM (T:0.18MM)		1				UR
	69K–45577–40	SHIM (T:0.30MM)		1				UR
	69K–45577–50	SHIM (T:0.40MM)		1				UR
	69K–45577–60	SHIM (T:0.50MM)		1				UR
73	93315–43064	BEARING		1				
74	93101–30002	OIL SEAL		2				
75	93211–04384	O-RING		2				
76	90105–08049	BOLT, FLANGE		2				
77	90201–08023	WASHER, PLATE		2				
78	93700–09M00	NIPPLE, GREASE		1				
79	6D0–45361–00–8D	CAP, LOWER CASING		1				
80	97095–08020	BOLT		2				
81	92995–08600	WASHER		2				

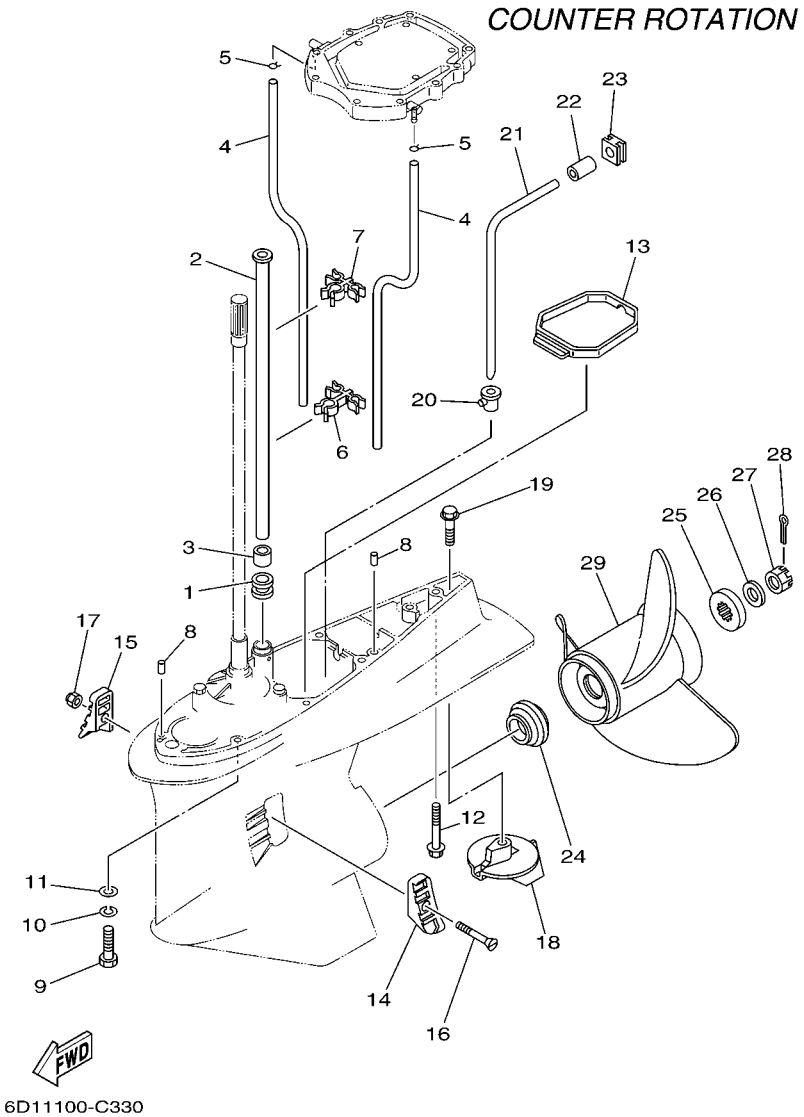

FIG. 33 LOWER CASING & DRIVE 4

REF. NO.	PART NO.	DESCRIPTION	6D01	6D11				REMARKS
1	6E5–44366–00	DAMPER, WATER SEAL		1				
2	61A–44361–20	TUBE, WATER		1				X
	61A–44361–30	TUBE, WATER		1				U
3	6E5–44365–00	DAMPER, WATER SEAL		1				
4	90445–09111	HOSE (L430)		2				X
	90445–09024	HOSE (L485)		2				U
5	90467–08M10	CLIP		2				
6	90464–15006	CLAMP		1				
7	90464–15005	CLAMP		1				
8	93608–12M05	PIN, DOWEL		2				
9	97095–10045	BOLT		7				
10	92995–10100	WASHER		7				
11	92995–10600	WASHER		7				
12	90119–10MA2	BOLT, WITH WASHER		1				
13	6D0–45375–00	DAMPER, SEAL		1				
14	61A–45214–10	COVER, WATER INLET		1				
15	61A–45215–10	COVER, WATER INLET		1				
16	90152–05003	SCREW, COUNTERSUNK		1				
17	90185–05002	NUT, SELF-LOCKING		1				
18	69L–45371–00	TAB-TRIM		1				
19	90105–10M00	BOLT, FLANGE		1				
20	6D0–44367–00	DAMPER, WATER SEAL		1				
21	6D0–44362–00	TUBE, WATER		1				
22	6D0–44365–00	DAMPER, WATER SEAL		1				
23	6D0–44366–00	DAMPER, WATER SEAL		1				
24	69J–45987–00	SPACER		1				
25	688–45997–01	SPACER		1				

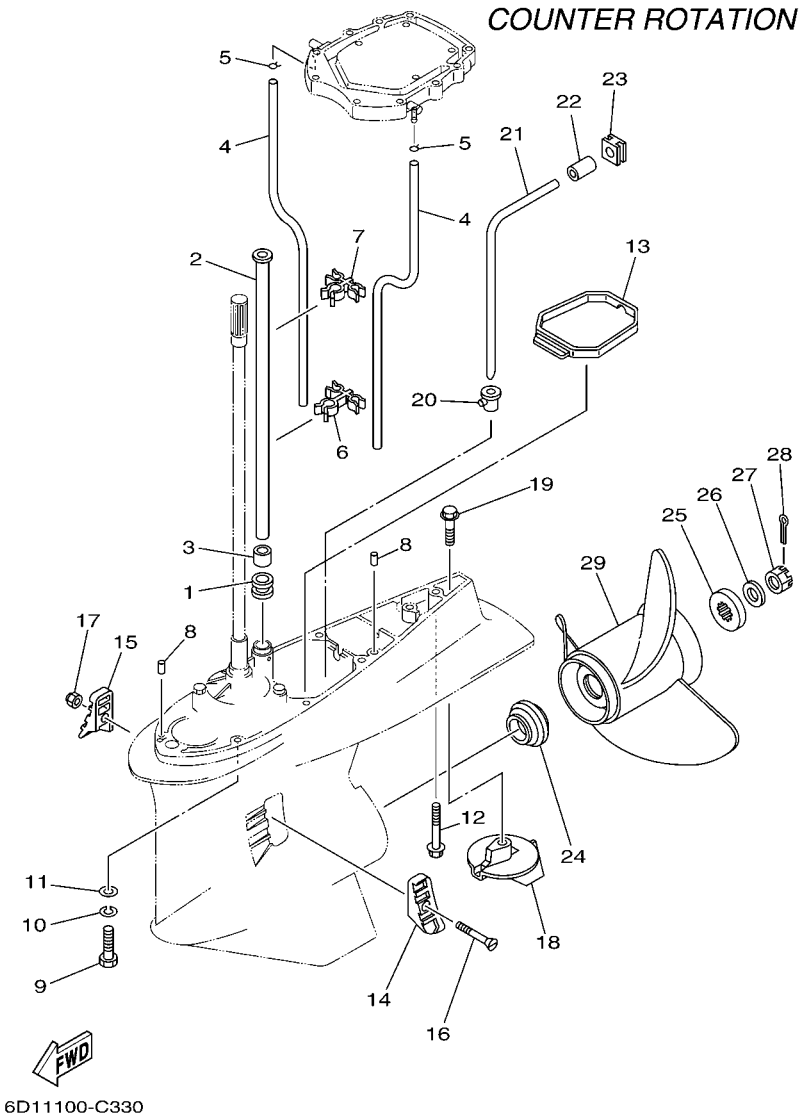

FIG. 33 LOWER CASING & DRIVE 4

REF. NO.	PART NO.	DESCRIPTION	6D01	6D11				REMARKS
26	92990–18200	WASHER		1				
27	90171–18M04	NUT, CASTLE		1				
28	91490–40030	PIN, COTTER		1				
29	6K1–45970–01–98	PROPELLER (3X15-1/4"X15"-ML)		1				UR
	6K1–45972–01–98	PROPELLER (3X13-3/4"X21"-ML)		1				UR
	6K1–45974–02–98	PROPELLER (3X13-3/4"X19"-ML1)		1				UR
	6K1–45978–02–98	PROPELLER (3X13-3/4"X17"-ML1)		1				UR
	61B–45972–00–98	PROPELLER (3X14-1/2"X21"-TL)		1				UR
	61B–45974–00–98	PROPELLER (3X14-1/2"X19"-TL)		1				UR
	61B–45978–00–98	PROPELLER (3X15"X17"-TL)		1				UR
	6R1–45970–A0	PROPELLER (3X15-1/4"X19"-ML)		1				UR
	6R1–45972–A0	PROPELLER (3X14-7/8"X21"-ML)		1				UR
	6R1–45974–A0	PROPELLER (3X14-1/2"X23"-ML)		1				UR
	6R1–45976–A0	PROPELLER (3X15-1/4"X15"-ML)		1				UR
	6R1–45978–A0	PROPELLER (3X15-1/4"X17"-ML)		1				UR

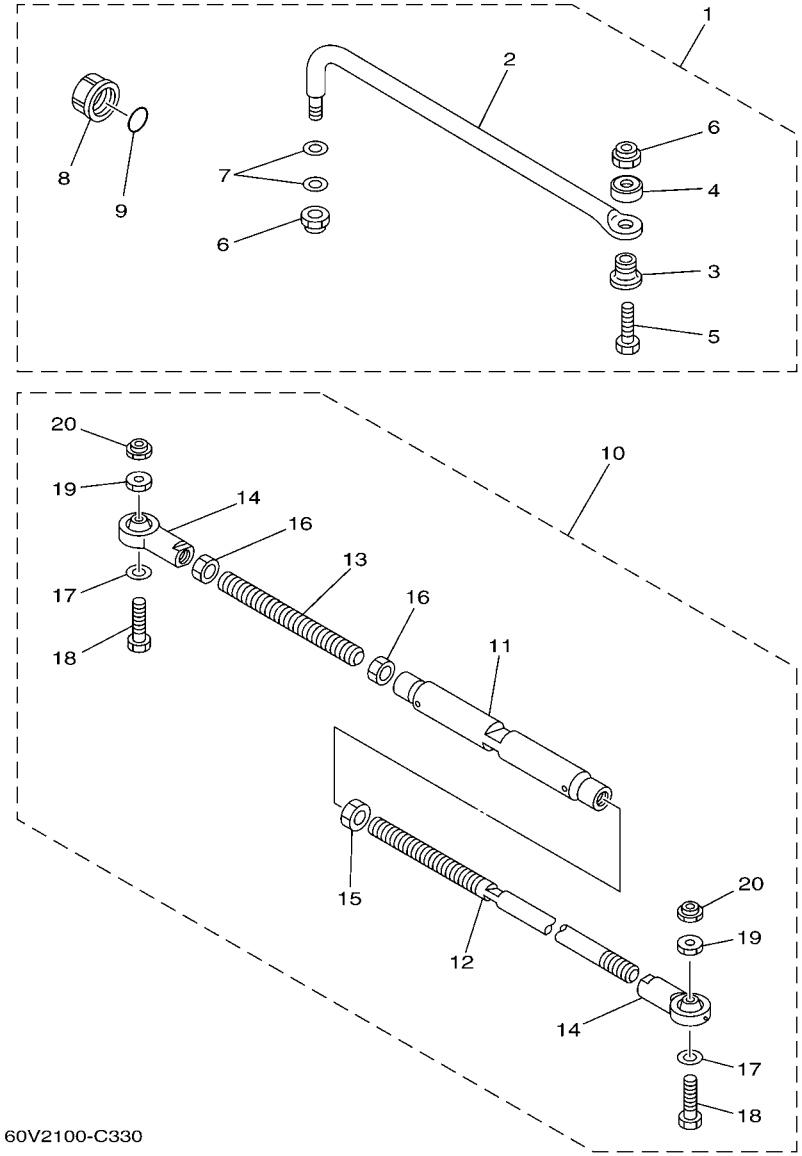

FIG. 34 STEERING GUIDE

REF. NO.	PART NO.	DESCRIPTION	6D01	6D11				REMARKS
1	6E5–61350–02	STEERING GUIDE ATTACHMENT KIT	1					AP
2	6E5–61351–01	.ROD, STEERING LINK	1					
3	90387–10M61	.COLLAR	1					
4	90560–12M01	.SPACER	1					
5	6E5–61355–00	.BOLT	1					
6	90185–09M01	.NUT, SELF-LOCKING	2					
7	90201–10M20	.WASHER, PLATE	2					
8	6E5–43145–01	.CAP, CLAMP BRACKET	1					
9	93210–16275	.O-RING	1					
10	6E5–61301–01	TWIN KIT (L:600-800MM)		1				AP
11	6E5–61313–00	.ADJUSTER		1				
12	6E5–61311–11	.TIE BAR		1				
13	6E5–61315–00	.TIE BAR		1				
14	6E5–61303–00	.STEERING EYE COMP.		2				
15	90170–14M06	.NUT		1				
16	95380–14700	.NUT		2				
17	90201–10M76	.WASHER, PLATE		2				
18	90101–09M70	.BOLT		2				
19	90170–09M05	.NUT		2				
20	90185–09M01	.NUT, SELF-LOCKING		2				

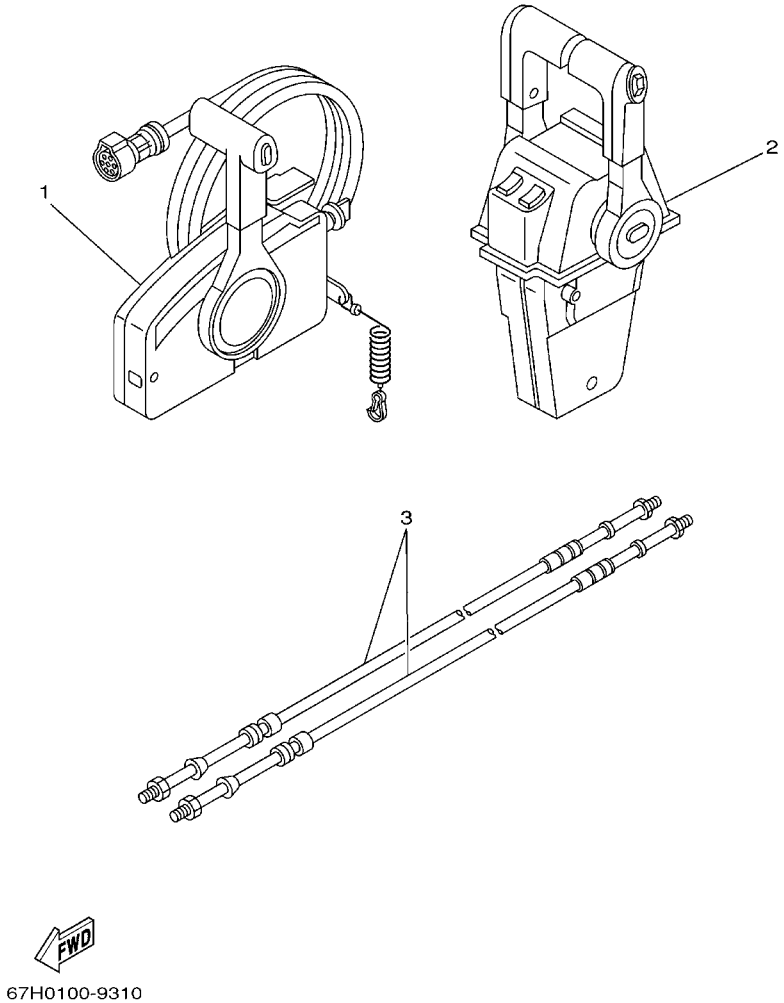

FIG. 35 REMOTE CONTROL BOX

REF. NO.	PART NO.	DESCRIPTION	6D01	6D11				REMARKS
1	703–48205–17	REMOTE CONTROL ASSY	1					AP WITH PT/T SW.
2	704–48207–23	REMOTE CONTROL ASSY		1				AP WITH PT/T SW.
3	701–48320–50	CABLE, REMOTE CONTROL L=15F	2	2				UR
	701–48320–60	CABLE, REMOTE CONTROL L=16F	2	2				UR
	701–48320–80	CABLE, REMOTE CONTROL L=17F	2	2				UR
	701–48350–00	CABLE, REMOTE CONTROL L=21F	2	2				UR
	701–48350–20	CABLE, REMOTE CONTROL L=23F	2	2				UR

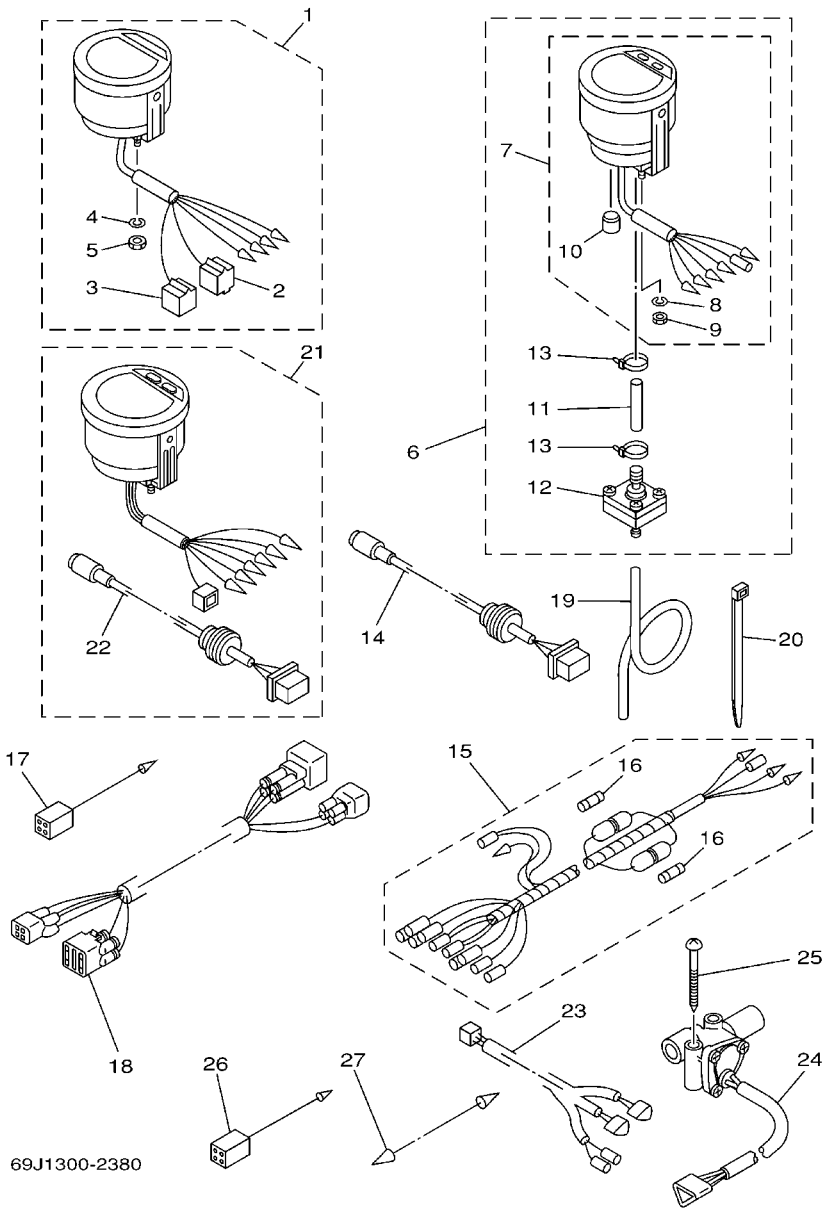

FIG. 36 METER

REF. NO.	PART NO.	DESCRIPTION	6D01	6D11				REMARKS
1	6Y5–8350T–03	TACHOMETER ASSY	1	1				AP
2	9E450–04433	.CONNECTOR	1	1				M-4-W
3	9E450–04533	.CONNECTOR	1	1				F-4-W
4	92990–04100	.WASHER, SPRING	2	2				
5	95380–04600	.NUT	2	2				
6	6Y5–83500–S5	DIGITAL SPEEDOMETER ASSY	1					AP
7	6Y5–83570–S5	.SPEEDOMETER ASSY	1					
8	92990–04100	..WASHER, SPRING	2					
9	95380–04600	..NUT	2					
10	6Y5–83533–T2	..GROMMET	1					
11	6Y5–83557–31	.TUBE	1					
12	6Y5–83728–00	.CONNECTOR ASSY	1					
13	90465–11M10	.CLAMP	2					
14	6Y5–87122–S0	CORD ASSY 1	1					AP
15	6Y5–83553–M0	WIRE, LEAD	1					AP
	6Y5–83553–00	WIRE, LEAD		1				AP
16	1E6–82151–00	.FUSE (10A)	2					FOR 6Y5-83553-M0
	1E6–82151–00	.FUSE (10A)		1				FOR 6Y5-83553-00
17	6Y5–82117–00	WIRE, LEAD (BLACK)	1					AP
18	68F–82553–80	EXTENSION, WIRE LEAD	1					AP
	68F–82553–90	EXTENSION, WIRE LEAD		1				AP
19	6Y5–83557–10	TUBE (8M)	1					AP
20	90465–11M10	CLAMP	2					AP
21	6Y5–8350F–00	FUEL MANAGEMENT METER		1				AP
22	6Y5–87122–S0	.CORD ASSY 1		1				
23	6Y5–83553–F1	WIRE, LEAD		1				AP
24	6Y5–85752–01	SENDER UNIT ASSY, FUEL METER		2				AP

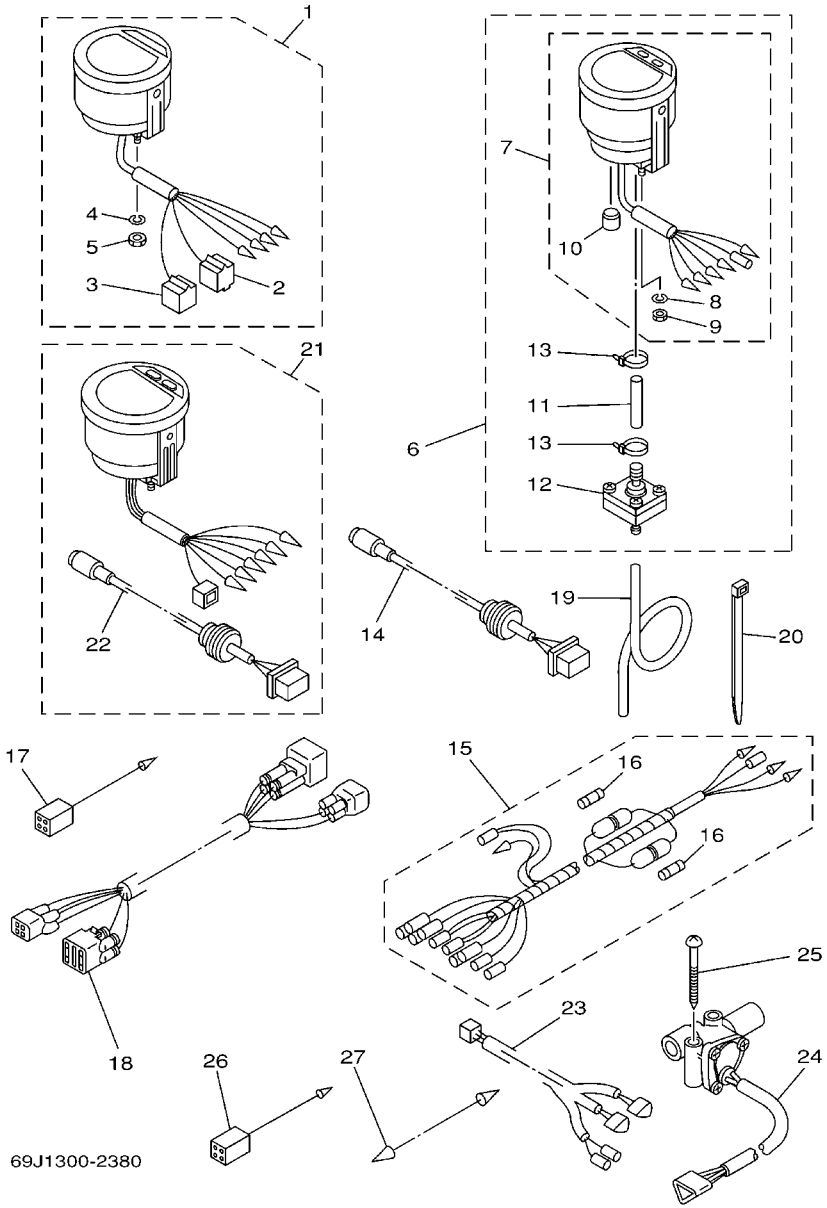

FIG. 36 METER

REF. NO.	PART NO.	DESCRIPTION	6D01	6D11				REMARKS
25	90158–06002	SCREW, WOOD		4				AP
26	6Y5–82117–00	WIRE, LEAD (BLACK)		1				AP
27	703–82531–00	WIRE, LEAD		1				AP

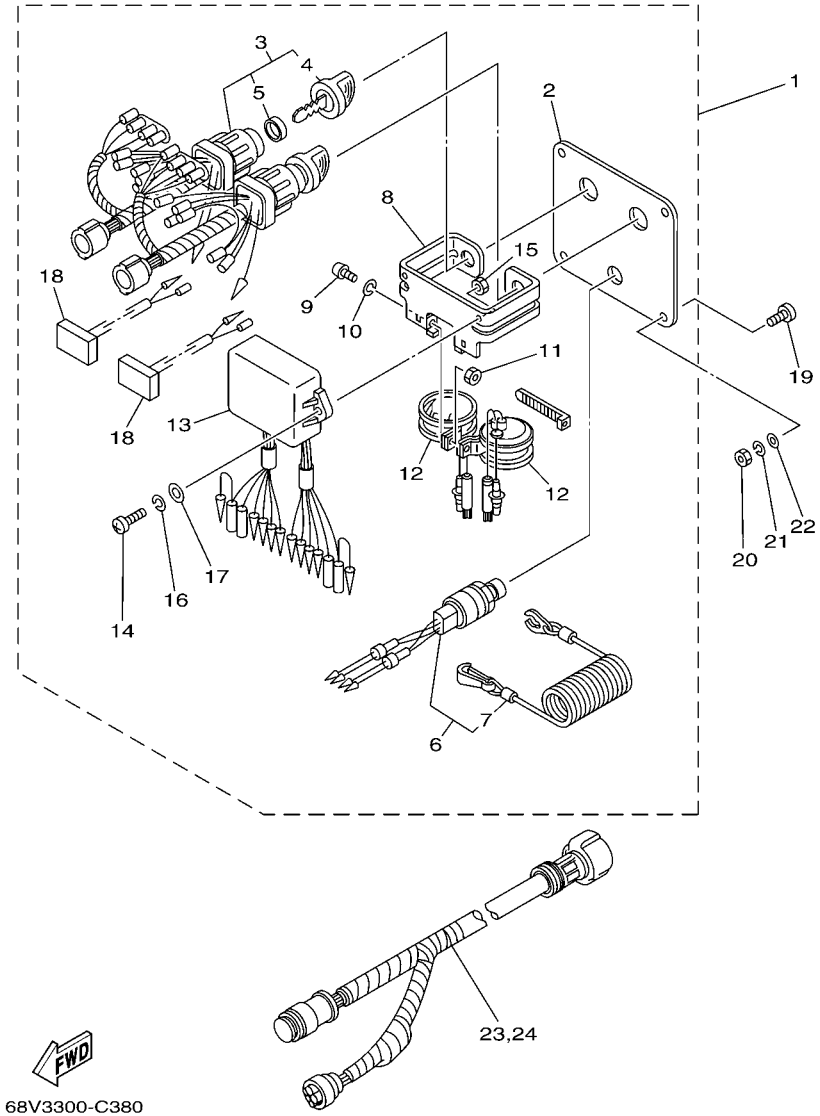

FIG. 37 SWITCH & PANEL

REF. NO.	PART NO.	DESCRIPTION	6D01	6D11				REMARKS
1	6K1–82570–07	PANEL SWITCH ASSY		1				AP
2	6K1–82571–01	.PANEL, SWITCH		1				
3	6K1–82510–06	.MAIN SWITCH ASSY		2				
4	703–82577–00	..CAP, KEY		1				
5	6K1–82532–00	..CAP		1				
6	6K1–82575–00	.ENGINE STOP SWITCH ASSY		1				
7	682–82556–00	..STOPPER		1				
8	6K1–83614–01	.BRACKET		1				
9	98980–05010	.SCREW, BIND		2				
10	92990–05100	.WASHER, SPRING		2				
11	95380–05600	.NUT		2				
12	688–83383–11	.BUZZER		2				
13	6K1–85830–01	.CONTROL UNIT ASSY		1				
14	98980–06020	.SCREW, BIND		2				
15	95380–06600	.NUT, HEXAGON		2				
16	92990–06100	.WASHER, SPRING		2				
17	92990–06600	.WASHER, PLATE		2				
18	6K1–81980–00	.DIODE ASSY		2				
19	90149–05M05	SCREW		4				AP
20	95380–05600	NUT		4				AP
21	92990–05100	WASHER, SPRING		4				AP
22	92990–05600	WASHER, PLATE		4				AP
23	6K1–8258A–40	EXTENSION, WIRE HARNESS		1				AP
24	61B–8258A–01	EXTENSION, WIRE HARNESS		1				AP

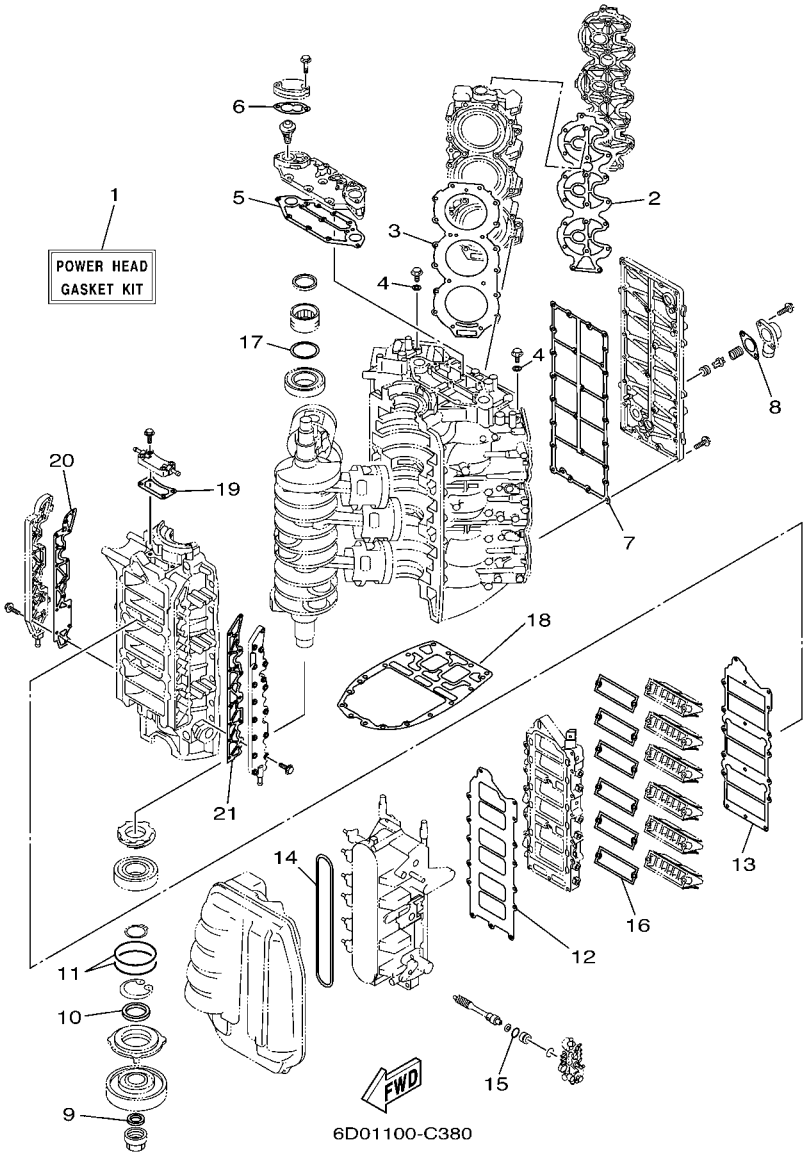

FIG. 38 REPAIR KIT 1

REF. NO.	PART NO.	DESCRIPTION	6D01	6D11				REMARKS
1	6D0–W0001–00	POWER HEAD GASKET KIT	1	1				
2	60V–11193–00	.GASKET, HEAD COVER 1	2	2				
3	6D0–11181–00	.GASKET, CYLINDER HEAD 1	2	2				
4	90430–14115	.GASKET	2	2				
5	60V–11381–00	.GASKET 1	1	1				
6	60V–12414–A0	.GASKET, COVER	2	2				
7	60V–41112–00	.GASKET, EXHAUST INNER COVER	1	1				
8	60V–11382–A0	.GASKET 2	1	1				
9	93104–22M07	.OIL SEAL	1	1				
10	93103–40011	.OIL SEAL	1	1				
11	93210–85M32	.O-RING	2	2				
12	60V–13646–00	.GASKET, MANIFOLD 2	1	1				
13	60V–13645–00	.GASKET, MANIFOLD 1	1	1				
14	60V–14476–00	.SEAL	1	1				
15	93210–18MA9	.O-RING	1	1				
16	60V–13621–A0	.GASKET, VALVE SEAT	6	6				
17	60V–11479–00	.GASKET	1	1				
18	60V–45113–01	.GASKET, UPPER CASING	1	1				
19	6D0–15451–00	.GASKET, CRANKCASE COVER 1	1	1				
20	6D0–15461–00	.GASKET, CRANKCASE COVER 2	1	1				
21	6D0–15462–00	.GASKET, CRANKCASE COVER 3	1	1				

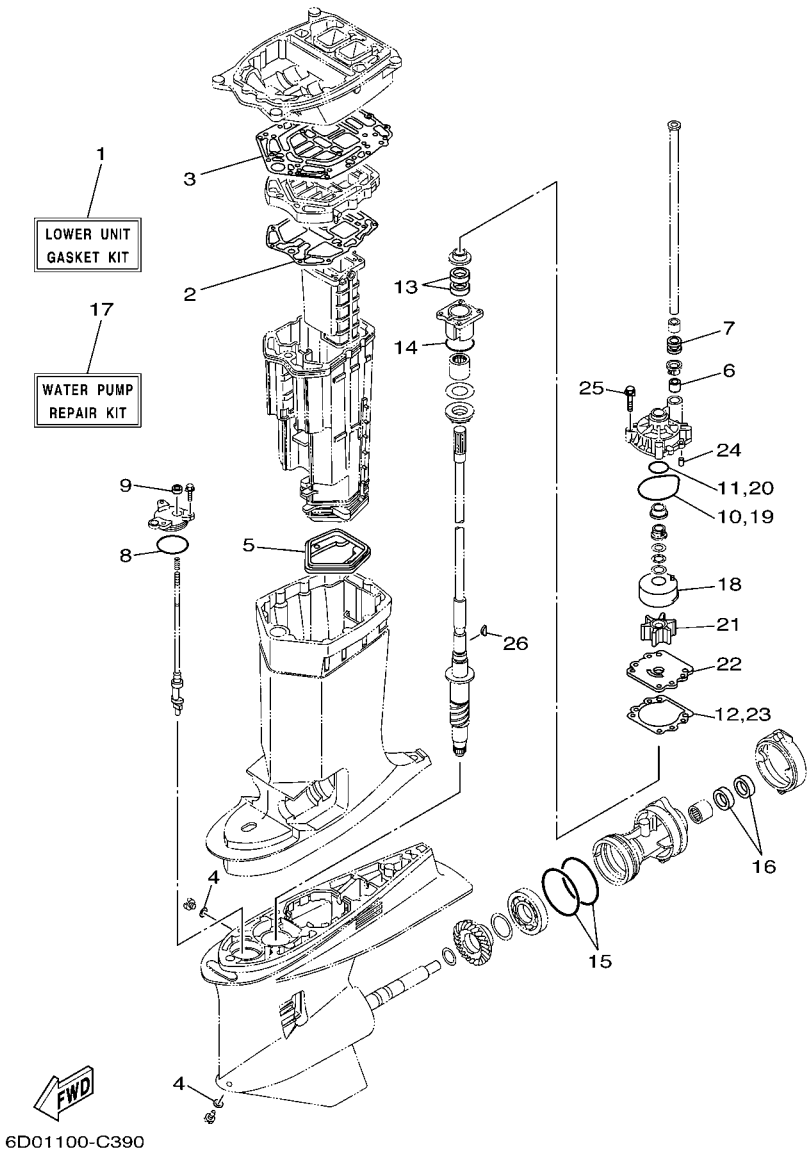

FIG. 39 REPAIR KIT 2

REF. NO.	PART NO.	DESCRIPTION	6D01	6D11				REMARKS
1	6D0–W0001–20	LOWER UNIT GASKET KIT	1	1				
2	61A–41134–A0	.GASKET, EXHAUST MANIFOLD	1	1				
3	60V–45114–00	.GASKET, UPPER CASING	1	1				
4	90430–08020	.GASKET	2	2				
5	6D0–45123–00	.GASKET, MUFFLER	1	1				
6	6E5–44365–00	.DAMPER, WATER SEAL	1	1				
7	6E5–44366–00	.DAMPER, WATER SEAL	1	1				
8	93210–64488	.O-RING	1	1				
9	93106–09014	.OIL SEAL	1	1				
10	93210–86M38	.O-RING	1	1				
11	93210–37160	.O-RING	1	1				
12	6E5–44315–A0	.GASKET, WATER PUMP	1	1				
13	93101–28M16	.OIL SEAL	2	2				
14	93210–55M14	.O-RING	1	1				
15	93211–04384	.O-RING	2	2				
16	93101–30002	.OIL SEAL	2	2				
17	61A–W0078–A3	WATER PUMP REPAIR KIT	1	1				
18	61A–44322–02	.INSERT, CARTRIDGE	1	1				
19	93210–86M38	.O-RING	1	1				
20	93210–37160	.O-RING	1	1				
21	6E5–44352–01	.IMPELLER	1	1				
22	6G5–44323–00	.OUTER PLATE, CARTRIDGE	1	1				
23	6E5–44315–A0	.GASKET, WATER PUMP	1	1				
24	93606–12019	.PIN, DOWEL	2	2				
25	90119–08M14	.BOLT, WITH WASHER	4	4				
26	90280–04M05	.KEY, WOODRUFF	1	1				

PART NO.	REF. NO.
6D0–11111–00–1S	5 – 1
68F–11119–00	5 – 13
	12 – 27
69J–1111E–00	5 – 35
6D0–11121–00–1S	5 – 23
6D0–11181–00	5 – 22
	38 – 3
60V–11191–00–1S	5 – 15
60V–11192–00–1S	5 – 37
60V–11193–00	5 – 16
	38 – 2
66M–11325–00	3 – 46
67F–11325–00	5 – 2
	6 – 27
60V–11325–01	3 – 27
60V–11327–00–94	5 – 5
	6 – 26
66M–11327–00–94	3 – 29
67F–11327–00–94	5 – 3
69J–11327–00–94	5 – 4
66M–11328–00	3 – 28
67F–11328–00	5 – 8
	6 – 30
60V–11369–00	12 – 14
60V–11370–00	3 – 7
650–11370–01	3 – 8
	12 – 15
6F6–11370–01	12 – 10
60V–11370–10	3 – 9
60V–11371–00–94	3 – 35
676–11372–00	6 – 22
	29 – 20
6D0–11372–00	3 – 11
6H1–11372–00	29 – 27
6G5–11372–00–1S	6 – 38
6E5–11372–01	3 – 3
60V–11379–00	12 – 9
60V–11381–00	3 – 39
	38 – 5
60V–11382–A0	6 – 37
	38 – 8
6D0–11411–00	4 – 1
61A–11447–00	4 – 2
60V–11479–00	4 – 5
	38 – 17
663–11518–01	3 – 12
61A–11536–00	4 – 8
68F–11536–00–94	7 – 13

PART NO.	REF. NO.
61A–11537–00	13 – 21
68F–11537–00–94	7 – 18
60V–11555–00	4 – 12
60V–11557–00	7 – 15
68F–11579–01–94	7 – 11
61A–11586–01	4 – 11
60V–11590–00	7 – 4
60V–11595–00	7 – 8
60V–11598–00–94	7 – 1
6D0–11603–00	4 – 21
6D0–11604–00	4 – 21
6D0–11605–00	4 – 21
6D0–11631–00–85	4 – 20
6D0–11633–00	4 – 24
60X–11634–00	4 – 25
6D0–11635–00	4 – 20
6D0–11636–00	4 – 20
6D0–11642–00–85	4 – 22
6D0–11645–00	4 – 22
6D0–11646–00	4 – 22
6D0–11650–00	4 – 26
6D0–12113–00	7 – 6
60V–12170–00	10 – 1
60V–12171–00	10 – 8
68F–12173–00	10 – 4
68F–12223–00	10 – 6
68F–12228–00	10 – 9
60V–12411–00	3 – 41
60V–12413–00–1S	3 – 42
60V–12414–A0	3 – 43
	38 – 6
6G5–12416–00	6 – 34
60V–12424–00	10 – 2
68F–12439–00	10 – 7
60V–12535–00	5 – 9
66M–12535–00	3 – 30
6R3–12572–00	23 – 58
60V–12576–00	23 – 45
61A–12576–00	6 – 40
60V–12578–00	23 – 46
6R3–12580–00	23 – 60
60V–12581–00	23 – 44
6G5–12581–00	3 – 26
60V–12588–00	23 – 47
68F–13100–00	13 – 34
61A–13117–00	13 – 23
68F–13133–00	13 – 39
60V–13161–00	11 – 6

PART NO.	REF. NO.
68F–1316A–00	13 – 41
68F–1316F–00	13 – 38
68F–1316G–00	13 – 40
60V–13171–00	11 – 7
6R3–13183–00	13 – 16
68F–13184–00	13 – 36
60V–1319K–00	13 – 44
6D0–13200–00	13 – 1
61A–13411–00	14 – 5
6E5–13414–00	14 – 6
68F–13416–00	13 – 42
6G5–13416–00	13 – 6
68F–13418–00	13 – 35
68F–13434–00	1 – 32
	2 – 35
6E5–13437–43	14 – 42
68F–13440–00	13 – 37
67F–13448–00	1 – 26
	2 – 27
6E5–13448–00	14 – 2
68F–13455–00	10 – 10
6R3–13471–00	13 – 2
60V–13473–00	10 – 34
68F–13473–00	10 – 11
6L2–13475–00	13 – 3
60V–13505–00	10 – 32
66K–13532–00	8 – 50
66K–13533–00	8 – 52
60V–13534–00	8 – 56
66K–13542–00	8 – 48
66K–13544–00	8 – 49
60V–13552–00	12 – 7
68F–13568–00	9 – 9
60V–13572–00	12 – 8
6D0–13610–00	12 – 1
60V–13621–A0	12 – 3
	38 – 16
60V–13624–00–1S	12 – 6
60V–13645–00	12 – 18
	38 – 13
60V–13646–00	12 – 17
	38 – 12
60V–13716–00	11 – 38
6D0–13751–00	9 – 1
60V–13761–00	11 – 11
68F–13764–00	11 – 34
68F–13767–00	11 – 1
68F–13781–00	8 – 24

PART NO.	REF. NO.
60V–13782–00	11 – 3
68F–13815–00	10 – 27
60V–13816–00	10 – 29
68F–13843–00	8 – 33
68F–13844–00	8 – 25
60V–13854–00	10 – 17
60V–13898–00	11 – 8
65L–13898–00	8 – 53
65L–13905–00	8 – 13
68F–13906–00	8 – 10
60V–13907–00	8 – 22
60V–13910–00	10 – 18
68F–13915–00	8 – 26
60V–13938–00	11 – 22
68F–13971–00	8 – 14
60V–13972–00	10 – 47
60V–13973–00	11 – 23
60V–13974–00	11 – 25
60V–13975–00	11 – 30
60V–13976–00	11 – 32
60V–13993–00	10 – 13
60W–13993–00	10 – 14
60V–14005–00	10 – 19
68F–1410B–00	11 – 12
65L–14125–00	8 – 9
60V–14126–00	10 – 20
65L–14147–00	8 – 34
60V–14148–00	10 – 35
60V–14149–00	10 – 41
65L–14159–00	8 – 23
60V–14163–00	8 – 12
65L–1416A–00	8 – 27
60V–14182–01	8 – 4
65L–14227–00	8 – 21
66K–14245–00	8 – 19
60V–14264–00	11 – 13
66K–14271–00	8 – 28
68F–14271–00	8 – 38
68F–14274–00	8 – 35
6A0–14325–00	15 – 40
66K–14325–01	8 – 11
65L–14334–00	9 – 4
65L–14397–00	8 – 39
60V–14440–00	12 – 23
60V–14476–00	12 – 24
	38 – 14
624–14485–00	3 – 4
68F–14485–00	13 – 43

PART NO.	REF. NO.
60V–14488–00	17 – 23
65L–14523–00	9 – 5
65L–14527–00	9 – 2
65L–14546–00	8 – 5
66K–14548–01	8 – 7
65L–14565–00	8 – 54
	9 – 3
	10 – 15
	11 – 14
65L–14573–00	9 – 17
65L–14578–00	9 – 8
65L–14579–00	9 – 18
6K5–14592–00	9 – 6
60V–14596–00	9 – 15
65L–14596–00	11 – 27
60V–14711–20–5B	29 – 33
6D0–14711–20–5B	29 – 33
6D0–14721–30–5B	29 – 37
65L–14966–00	8 – 16
60V–14980–00	8 – 3
66K–14984–00	8 – 8
66K–14985–00	8 – 6
65L–14992–00	8 – 40
65L–14997–00	8 – 41
6D0–15100–00–1S	3 – 2
61A–15315–00	24 – 45
6D0–15359–00–94	4 – 14
6D0–15411–00–1S	6 – 1
6D0–15421–00–1S	6 – 2
6D0–15431–00–1S	6 – 3
6D0–15451–00	6 – 4
	38 – 19
6D0–15461–00	6 – 5
	38 – 20
6D0–15462–00	6 – 6
	38 – 21
6A0–15789–00	26 – 21
61A–21708–20	14 – 19
6E5–21733–20	14 – 20
6E5–21734–01–33	14 – 35
6E5–21746–00	14 – 37
61A–21750–00	14 – 1
6E5–21770–03	14 – 21
6E5–21798–01–33	14 – 36
60V–23115–00	18 – 44
60V–23116–00	18 – 33
60V–23116–10	18 – 34
60V–2318U–00	18 – 35

PART NO.	REF. NO.
60V–2318U–10	18 – 36
60V–24135–00	3 – 36
60V–2415E–40	23 – 66
65L–24169–00	8 – 46
60V–24176–00	10 – 23
60V–24178–00	10 – 22
60V–24198–00	18 – 29
60V–24198–10	18 – 30
60V–24216–00	8 – 1
60V–24251–00	8 – 18
646–24251–02	14 – 24
68F–24300–00	10 – 21
6Y2–24307–50	16 – 1
68F–24311–00	15 – 24
60V–24312–00	10 – 37
60V–24313–00	10 – 39
61A–24313–00	15 – 1
6E5–24313–00	15 – 46
60V–24314–00	10 – 43
60V–24315–00	10 – 45
6E5–24315–00	15 – 29
6G5–24315–00	15 – 27
6G5–24316–10	15 – 45
60V–24319–00	13 – 31
6E5–24319–01	14 – 25
6E5–24321–01	14 – 29
6E5–24322–00	14 – 22
6E5–24323–00	14 – 15
60V–24339–01	8 – 55
6E5–24351–51	16 – 3
68F–24356–00	10 – 38
6Y2–24360–60	16 – 5
60V–24375–01	8 – 42
66K–24376–00	8 – 36
8H8–24376–00	6 – 20
6E5–24377–00	23 – 2
	29 – 2
6R3–24377–00	15 – 4
6R3–24377–10	15 – 5
60V–24378–00	10 – 24
688–24378–00	6 – 17
6E0–24378–00	3 – 25
6E5–24378–00	15 – 26
	23 – 48
6E5–24379–00	14 – 12
65L–24387–00	8 – 15
	10 – 36
60V–24397–01	8 – 43

PART NO.	REF. NO.
6E5–24410–03	15 – 30
6E5–24411–00	15 – 35
6E5–24412–10	15 – 42
6E5–24413–00	15 – 32
6A0–24421–01	15 – 39
6E5–24423–00	15 – 37
648–24424–00	15 – 36
650–24431–A0	15 – 43
6E5–24434–02	15 – 38
6E5–24435–00	15 – 34
6E5–24444–00	15 – 31
65L–24461–00	8 – 51
68F–24469–10	15 – 11
6E5–24471–00	15 – 33
6D0–24473–00	8 – 2
65L–24486–00	8 – 17
68F–24486–00	10 – 30
66K–24489–00	8 – 37
68F–24519–10	15 – 10
65L–24531–01	15 – 12
68F–24551–00	11 – 9
60H–24558–00	15 – 16
68F–24560–10	15 – 8
68F–24562–10	15 – 9
68F–24563–10	15 – 14
61A–24564–00	15 – 13
65L–24564–00	15 – 15
68F–24566–00	15 – 19
68F–24576–00	11 – 10
66K–24579–00	8 – 44
68F–24579–00	10 – 16
65L–24592–00	8 – 45
68F–2466A–00	10 – 28
	11 – 24
60V–24864–00	10 – 25
60V–2510T–00	10 – 26
68F–28100–00	15 – 53
67F–2812A–00	20 – 43
61H–2819R–31	15 – 52
60V–41112–00	6 – 23
	38 – 7
60V–41113–00–94	6 – 21
6D0–41131–00–5B	29 – 28
6D0–41132–00–5B	29 – 30
61A–41134–A0	29 – 31
	39 – 2
6D0–41137–00–94	29 – 19
65L–41217–00	9 – 19

PART NO.	REF. NO.
6D0–41230–00	24 – 59
61A–41237–00	24 – 56
6H1–41237–00	13 – 28
6H4–41237–00	24 – 58
6R5–41237–00	13 – 25
65L–41241–10	13 – 26
60V–41267–00	6 – 24
65L–41632–01	24 – 49
60V–42510–20–8D	26 – 1
60V–42510–30–8D	26 – 1
624–42542–00	14 – 9
	17 – 20
	18 – 41
	20 – 16
6D0–42610–00–8D	1 – 1
6C9–42610–00–NA	2 – 1
60V–42613–00–8D	1 – 11
60X–42613–00–NA	2 – 11
60V–42615–00	23 – 19
60V–42621–00	1 – 12
60V–42626–00	1 – 27
60X–42626–00	2 – 28
60V–42626–10	1 – 28
60X–42626–10	2 – 33
60X–42636–00–NA	2 – 15
60X–42636–10–NA	2 – 16
60V–42637–00	1 – 30
	2 – 30
60V–42637–10	1 – 31
	2 – 32
68F–42647–01–94	1 – 2
	2 – 2
68F–42648–01–94	1 – 3
	2 – 3
60V–42651–01	1 – 7
	2 – 7
60V–42652–00	1 – 8
	2 – 8
60V–42662–00	1 – 20
	2 – 21
60X–42662–00	2 – 17
68F–42663–00	1 – 6
	2 – 6
60V–42664–00	1 – 14
6C9–42677–00	2 – 22
6D0–42677–00	1 – 21
6C9–42678–00	2 – 26
6D0–42678–00	1 – 25

PART NO.	REF. NO.
6C9–4267A–00	2 – 31
60V–42681–00	1 – 23
6C9–42681–00	2 – 24
60V–42682–00	1 – 24
6C9–42682–00	2 – 25
60V–42687–00	1 – 16
6C9–42687–00	2 – 20
60V–42710–00–8D	23 – 1
61A–42716–00	23 – 54
61A–42717–00	23 – 53
60V–42718–00	23 – 35
69J–42723–00	19 – 21
6D0–42723–00–5B	23 – 34
61A–42724–00	24 – 46
60V–42725–00	23 – 21
6H4–42726–00	23 – 57
688–42726–10	23 – 31
6D0–42727–00	23 – 3
60V–42738–00–8D	23 – 22
64D–42738–10–5B	23 – 24
60V–42741–00–8D	23 – 37
69L–42744–00	24 – 64
68F–42753–00	23 – 63
60V–42756–00	23 – 38
6E5–42761–00–1S	3 – 53
60V–42771–00	23 – 50
60V–42774–00	23 – 55
68F–42791–01	23 – 65
61A–42791–S0	29 – 3
61A–42792–S0	29 – 4
60V–42815–00–8D	23 – 7
60V–42816–00–8D	23 – 8
60V–42817–00–8D	23 – 9
67F–42818–00	23 – 11
68F–42818–00	23 – 10
68F–42828–00–94	23 – 4
68F–42828–10–94	23 – 5
69J–43111–01–8D	25 – 1
69J–43112–01–8D	25 – 14
6E5–43126–02	25 – 44
6R3–43131–00	25 – 21
61A–43132–00	25 – 12
61A–43133–00	25 – 15
64D–43144–00	23 – 16
6G5–43144–00	25 – 35
6E5–43145–01	34 – 8
6G5–43148–10	25 – 40
61A–43181–01	25 – 37

PART NO.	REF. NO.
6G5–43185–02	25 – 38
61A–43311–21–8D	25 – 32
61A–43311–31–8D	25 – 32
61A–43376–00	26 – 34
60V–43800–00–4D	27 – 1
6T4–43802–03	27 – 52
69J–43804–00	28 – 5
69J–43805–00	28 – 4
61A–43810–00	27 – 3
61A–43813–01	27 – 12
6H1–43814–00	27 – 11
6H1–43816–00	27 – 51
6H1–43817–00	27 – 18
61A–43818–00	27 – 16
61A–43820–10	27 – 64
61A–43821–00	27 – 61
61A–43822–00	27 – 60
69J–43828–00	27 – 20
6H1–43829–00	27 – 57
61A–4382A–00	27 – 73
61A–4382K–00	27 – 44
6T4–43830–00	27 – 43
6H1–43831–00	27 – 42
61A–43833–01	27 – 15
61A–43835–01	27 – 14
61A–4383H–11	27 – 68
61A–43840–01	27 – 2
6T4–43841–00	27 – 55
6T4–43844–00	27 – 46
61A–43845–00	27 – 32
61A–43847–00	27 – 35
61A–43848–00	27 – 30
6T4–43849–00	27 – 39
61A–4384F–00	27 – 41
6T4–4384G–00	27 – 47
61A–4384H–10	27 – 69
61A–4384J–00	27 – 26
61A–4384K–00	27 – 25
61A–4384L–00	27 – 22
6T4–43851–00	27 – 23
61A–43854–00	27 – 31
6T4–43855–00	27 – 48
6H1–43856–10	27 – 45
61A–4385H–00	27 – 40
61A–43861–00	27 – 4
69J–43861–00	28 – 6
6H1–43861–00	27 – 7
61A–43864–00	27 – 66

PART NO.	REF. NO.
6H1–43866–00	27 – 53
6H1–43867–00	27 – 54
6H1–43869–00	27 – 21
69J–4386K–00	28 – 10
61A–43871–00	27 – 5
6H1–43872–00	27 – 8
61A–43874–00	27 – 65
61A–43875–00	27 – 29
6H1–43875–00	27 – 33
6T4–43875–01	27 – 59
61A–43875–10	27 – 67
61A–43876–00	27 – 70
6T4–43876–00	27 – 36
61A–43878–00	27 – 58
69J–43880–00	27 – 74
	28 – 1
69J–43881–00	28 – 11
69J–43882–00	28 – 8
69J–43886–00	28 – 7
69J–43888–00	27 – 13
69J–43891–00	28 – 9
6T4–43893–00	27 – 71
6T4–43895–00	27 – 49
61A–4389H–00	27 – 9
61A–44112–00	24 – 37
61A–44116–00	24 – 31
60V–44117–00–1S	24 – 5
61A–44118–00–8D	24 – 29
61A–44120–22	24 – 35
61A–44120–32	24 – 35
61A–44121–00	24 – 23
68J–44122–01	24 – 24
61A–44138–00	24 – 47
60V–44150–00	30 – 15
60W–44150–00	32 – 17
60V–44176–00–1S	24 – 8
60V–44194–00	24 – 6
688–44194–00	24 – 67
61A–44311–01	30 – 18
	32 – 20
6E5–44312–00	30 – 23
	32 – 25
6E5–44315–A0	30 – 31
	32 – 33
	39 – 12
61A–44322–02	30 – 19
	32 – 21
	39 – 18

PART NO.	REF. NO.
6G5–44323–00	30 – 30
	32 – 32
	39 – 22
6E5–44352–01	30 – 24
	32 – 26
	39 – 21
61A–44361–20	31 – 2
	33 – 2
61A–44361–30	31 – 2
	33 – 2
6D0–44362–00	31 – 21
	33 – 21
6D0–44365–00	31 – 22
	33 – 22
6E5–44365–00	30 – 22
	31 – 3
	32 – 24
	33 – 3
	39 – 6
663–44366–00	30 – 6
	32 – 8
6D0–44366–00	31 – 23
	33 – 23
6E5–44366–00	31 – 1
	33 – 1
	39 – 7
6D0–44367–00	31 – 20
	33 – 20
6E5–44391–00	23 – 20
61A–44511–00–94	26 – 29
60V–44514–00–94	26 – 22
6G5–44526–00	25 – 3
68F–44533–00	3 – 55
61A–44551–01–8D	26 – 6
61A–44552–01–94	26 – 17
61A–44553–00–8D	26 – 20
60V–44555–00–94	26 – 9
61A–44575–00	26 – 8
6D0–45111–20–8D	29 – 1
6D0–45111–30–8D	29 – 1
60V–45113–01	29 – 23
	38 – 18
60V–45114–00	29 – 18
	39 – 3
6D0–45123–00	29 – 34
	39 – 5
61A–45123–01	29 – 36
61A–45155–00	29 – 5

PART NO.	REF. NO.
61A–45214–10	31 – 14
	33 – 14
61A–45215–10	31 – 15
	33 – 15
6G5–45251–02	25 – 2
6D0–45300–20–8D	30 – 1
6D1–45300–20–8D	32 – 1
6D0–45300–30–8D	30 – 1
6D1–45300–30–8D	32 – 1
6D0–45301–00–8D	30 – 2
	32 – 2
6E5–45318–00	29 – 16
61A–45321–01	30 – 11
	32 – 13
61A–45331–00–94	30 – 34
	32 – 36
6D0–45332–00–94	30 – 60
6D1–45332–00–94	32 – 64
688–45341–10	30 – 8
	32 – 10
6E5–45344–00	30 – 40
	32 – 42
6D0–45361–00–8D	30 – 72
	32 – 79
69L–45371–00	31 – 18
	33 – 18
6D0–45375–00	31 – 13
	33 – 13
61A–45376–00–94	30 – 10
	32 – 12
61A–45378–00	29 – 10
61B–45383–00	32 – 70
69K–45384–00	32 – 71
60V–45501–20	30 – 43
	32 – 45
60V–45501–30	30 – 43
	32 – 45
61A–45527–00	30 – 27
	32 – 29
61A–45538–00	30 – 26
	32 – 28
61B–45538–01	32 – 4
60X–45551–00	30 – 44
	32 – 46
60X–45560–00	30 – 47
6D1–45560–00	32 – 49
61A–45567–00–10	30 – 5
	32 – 7

PART NO.	REF. NO.
61A–45567–00–12	30 – 5
	32 – 7
61A–45567–00–15	30 – 5
	32 – 7
61A–45567–00–18	30 – 5
	32 – 7
61A–45567–00–30	30 – 5
	32 – 7
61A–45567–00–40	30 – 5
	32 – 7
61A–45567–00–50	30 – 5
	32 – 7
69L–45571–00	30 – 63
6D1–45571–00	32 – 67
69K–45577–00	32 – 72
61A–45577–00–10	30 – 65
61A–45577–00–12	30 – 65
61A–45577–00–15	30 – 65
61A–45577–00–18	30 – 65
61A–45577–00–30	30 – 65
61A–45577–00–40	30 – 65
61A–45577–00–50	30 – 65
69K–45577–10	32 – 72
69K–45577–20	32 – 72
69K–45577–30	32 – 72
69K–45577–40	32 – 72
69K–45577–50	32 – 72
69K–45577–60	32 – 72
6K1–45578–01–10	32 – 69
6K1–45578–01–12	32 – 69
6K1–45578–01–15	32 – 69
6K1–45578–01–18	32 – 69
6K1–45578–01–30	32 – 69
6K1–45578–01–40	32 – 69
6K1–45578–01–50	32 – 69
61A–45587–00–10	30 – 37
	32 – 39
61A–45587–00–12	30 – 37
	32 – 39
61A–45587–00–15	30 – 37
	32 – 39
61A–45587–00–18	30 – 37
	32 – 39
61A–45587–00–30	30 – 37
	32 – 39
61A–45587–00–40	30 – 37
	32 – 39
61A–45587–00–50	30 – 37

PART NO.	REF. NO.
61A–45587–00–50	32 – 39
60V–45611–00	30 – 48
69K–45611–00	32 – 52
60V–45631–00	30 – 52
	32 – 56
61A–45632–00	30 – 51
	32 – 55
61A–45633–00	30 – 53
	32 – 57
61A–45634–01	30 – 50
	32 – 54
61A–45635–00	30 – 55
	32 – 59
61B–45641–01	32 – 53
61A–45641–02	30 – 49
6H1–45668–00	30 – 54
	32 – 58
6K1–45970–01–98	33 – 29
6G5–45970–02–98	31 – 29
6R1–45970–A0	33 – 29
6R4–45970–A0	31 – 29
61A–45972–00–98	31 – 29
61B–45972–00–98	33 – 29
6K1–45972–01–98	33 – 29
6G5–45972–02–98	31 – 29
6R1–45972–A0	33 – 29
6R4–45972–A0	31 – 29
61A–45974–00–98	31 – 29
61B–45974–00–98	33 – 29
6K1–45974–02–98	33 – 29
6G5–45974–03–98	31 – 29
6R1–45974–A0	33 – 29
6R4–45974–A0	31 – 29
6R1–45976–A0	33 – 29
6R4–45976–A0	31 – 29
61A–45978–00–98	31 – 29
61B–45978–00–98	33 – 29
6K1–45978–02–98	33 – 29
6G5–45978–03–98	31 – 29
6R1–45978–A0	33 – 29
6R4–45978–A0	31 – 29
69J–45987–00	31 – 24
	33 – 24
688–45997–01	31 – 25
	33 – 25
60V–46241–00	7 – 10
703–48205–17	35 – 1
704–48207–23	35 – 2

PART NO.	REF. NO.
701–48320–50	35 – 3
701–48320–60	35 – 3
701–48320–80	35 – 3
6E5–48344–00	24 – 27
701–48350–00	35 – 3
701–48350–20	35 – 3
60V–48531–10	24 – 1
663–48538–00	24 – 2
6E5–61301–01	34 – 10
6E5–61303–00	34 – 14
6E5–61311–11	34 – 12
6E5–61313–00	34 – 11
6E5–61315–00	34 – 13
6E5–61350–02	34 – 1
6E5–61351–01	34 – 2
6E5–61355–00	34 – 5
60V–81128–00	20 – 47
60V–81332–00	17 – 14
60V–81336–00	20 – 45
60V–81336–10	20 – 46
60V–81337–00	17 – 18
60V–81410–01	17 – 2
60V–81450–00	17 – 1
60V–81545–00	11 – 17
60V–81546–00	11 – 18
6D0–81800–00	22 – 1
69J–81801–00	22 – 5
67F–81807–00	22 – 10
67F–81808–00	22 – 8
67F–81809–00	22 – 19
67F–81810–00	22 – 3
67F–81813–00	22 – 6
68F–81820–00	22 – 7
67F–81821–00	22 – 13
6K7–81826–10	22 – 24
69J–81828–00	22 – 25
65L–8182A–00	8 – 29
65L–8182E–00	8 – 31
65L–8182F–00	8 – 32
65L–8182K–00	8 – 30
67F–81830–00	22 – 17
67F–81832–00	22 – 11
67F–81836–00	22 – 12
69J–81839–00	22 – 21
67F–8183R–00	22 – 16
60V–8183T–00	22 – 18
69J–81840–00	22 – 4
67F–81841–00	22 – 14

PART NO.	REF. NO.
60X–81842–00	22 – 20
67F–81846–00	22 – 26
67F–81850–00	22 – 2
67F–81857–00	22 – 9
69J–81869–00	22 – 23
67F–81891–00	22 – 15
6E5–81900–01	14 – 27
60V–81919–00	20 – 57
60V–81919–10	20 – 58
6E5–81922–00	14 – 28
60V–81925–00	22 – 28
6D0–81941–00	22 – 22
60V–81942–10	20 – 49
60V–81948–00	20 – 10
61A–81949–00	19 – 3
69J–81949–00	20 – 59
68V–8194A–00	20 – 26
60V–81950–00	20 – 20
68V–81950–00	18 – 46
68V–81953–00	20 – 32
68F–8195A–00	20 – 37
60V–81960–01	20 – 1
60V–81972–00–1S	20 – 3
60V–81975–A0	20 – 2
6K1–81980–00	37 – 18
60V–82105–00	19 – 6
68F–82117–00	20 – 27
6Y5–82117–00	36 – 17
682–82119–01	20 – 22
61A–82147–20	25 – 34
61A–82147–30	25 – 34
6E5–82148–00	25 – 9
6H1–82148–00	25 – 6
6E5–82149–00	26 – 12
1E6–82151–00	36 – 16
60V–82151–00	20 – 36
67F–82151–00	20 – 38
67F–82151–10	20 – 39
60V–82157–00	20 – 44
60V–82170–00	20 – 35
60V–82176–00	20 – 51
60V–82310–00	18 – 18
60V–82310–10	18 – 21
60V–82314–01	18 – 28
6A0–82317–00	14 – 8
	17 – 21
	18 – 40
	20 – 15

PART NO.	REF. NO.
663–82317–01	17 – 19
68F–82370–01	18 – 27
60V–82380–00	11 – 19
67H–82380–00	19 – 30
68F–82384–00	11 – 21
68F–82388–00	11 – 20
60V–82389–00	11 – 15
60V–82398–00	11 – 16
60V–82507–00	8 – 47
68F–82509–00	8 – 20
6K1–82510–06	37 – 3
6E5–82519–00	18 – 13
60V–8252U–00	18 – 43
6D0–82531–00	19 – 9
703–82531–00	36 – 27
6K1–82532–00	37 – 5
68F–82553–80	36 – 18
68F–82553–90	36 – 18
682–82556–00	37 – 7
688–82560–10	21 – 8
69J–82563–00	19 – 19
6K1–82570–07	37 – 1
6K1–82571–01	37 – 2
6K1–82575–00	37 – 6
703–82577–00	37 – 4
68F–82582–00	22 – 29
69J–82587–00	19 – 20
60V–82588–00	21 – 1
6E5–82588–00	19 – 32
	23 – 32
61A–82588–01	24 – 16
61B–8258A–01	37 – 24
6K1–8258A–40	37 – 23
60V–82590–20	19 – 10
60V–82590–30	19 – 10
6E5–82594–00	15 – 6
6L2–82599–01	20 – 8
6R3–8259E–00	14 – 11
60V–8259F–00	24 – 19
61A–8259F–00	24 – 15
60V–8259M–00	19 – 14
68F–82846–00	20 – 40
688–83383–11	37 – 12
6Y5–83500–S5	36 – 6
6Y5–8350F–00	36 – 21
6Y5–8350T–03	36 – 1
6Y5–83533–T2	36 – 10
6Y5–83553–00	36 – 15

PART NO.	REF. NO.
6Y5–83553–F1	36 – 23
6Y5–83553–M0	36 – 15
65L–83557–00	15 – 49
6Y5–83557–10	36 – 19
6Y5–83557–31	36 – 11
6E5–83558–00	29 – 14
6Y5–83570–S5	36 – 7
60V–83614–00	19 – 22
6K1–83614–01	37 – 8
60V–83614–10	19 – 23
60V–83618–00	19 – 28
6K1–83623–41	17 – 26
6A1–83625–41	17 – 24
67F–83627–01	22 – 32
68F–83634–00	19 – 29
60V–83635–10	19 – 24
69J–83672–00	26 – 32
69J–83672–10	26 – 32
61A–83721–00	17 – 4
6Y5–83728–00	36 – 12
68F–83919–00	5 – 18
68F–85119–00	18 – 5
	20 – 11
60V–85516–00	9 – 14
68F–85516–01	18 – 37
	20 – 13
60V–85542–01–94	18 – 1
60V–85544–00	20 – 42
60V–85548–00	18 – 8
60V–85553–00	20 – 55
60V–85564–00	18 – 2
60V–85580–00	17 – 3
6E5–85711–40	17 – 25
6E5–85720–05	14 – 33
6R3–85721–80	14 – 34
61A–85730–01	14 – 4
6Y5–85752–01	36 – 24
61A–85790–00	21 – 4
6K1–85830–01	37 – 13
61A–85885–00	9 – 10
65L–85886–00	20 – 54
6K7–85886–01	9 – 11
61A–85895–00	21 – 6
6D0–8591A–00	18 – 6
60V–8591B–00	18 – 11
68F–86129–00	18 – 3
	20 – 14
68F–86129–10	18 – 4

PART NO.	REF. NO.
6Y5–87122–S0	36 – 14
60V–87149–00	20 – 17
60V–8818D–00	18 – 31
60V–8818D–10	18 – 32
6D0–W0001–00	38 – 1
6D0–W0001–20	39 – 1
60V–W0004–00	12 – 2
60V–W0070–00	1 – 22
6C9–W0070–00	2 – 23
61A–W0078–A3	39 – 17
6D0–W0090–10–1S	3 – 1
90101–06M00	15 – 44
90101–09M70	34 – 18
90101–12M05	25 – 48
90101–12M77	25 – 48
90105–06028	12 – 16
90105–08049	30 – 69
	32 – 76
90105–10M00	31 – 19
	33 – 19
90109–06M40	13 – 5
90109–06M80	23 – 17
	24 – 4
90109–06M81	23 – 23
90109–06M82	23 – 6
90109–06M86	19 – 27
90109–09001	4 – 27
90109–14M10	26 – 26
90109–14M48	26 – 13
90110–06M06	13 – 48
90110–08M04	11 – 5
90111–06034	18 – 45
	23 – 41
90116–08012	3 – 10
90119–06055	3 – 45
90119–06089	3 – 20
90119–06M10	30 – 14
	32 – 16
90119–06M17	29 – 11
90119–06M65	14 – 10
	18 – 42
	20 – 12
90119–06M88	15 – 23
90119–06MA2	3 – 40
	5 – 14
	6 – 39
	12 – 28
	18 – 12

PART NO.	REF. NO.
90119–06MA3	6 – 7
	18 – 7
	20 – 4
90119–06MA4	5 – 17
	20 – 5
	24 – 63
90119–08052	29 – 9
90119–08056	29 – 29
90119–08059	29 – 32
90119–08060	29 – 26
90119–08068	29 – 24
90119–08072	29 – 25
90119–08M14	30 – 33
	32 – 35
	39 – 25
90119–08M22	23 – 30
90119–08M60	11 – 2
90119–08MA5	5 – 20
90119–08MA8	5 – 21
90119–10M11	3 – 19
90119–10M72	7 – 5
90119–10MA2	31 – 12
	33 – 12
90149–05M05	37 – 19
90152–05003	31 – 16
	33 – 16
90157–06006	24 – 65
90158–06002	36 – 25
90159–05M25	24 – 68
90159–06M16	12 – 26
90160–05005	1 – 29
90169–05M00	20 – 53
	23 – 59
90170–09M05	34 – 19
90170–14M06	34 – 15
90170–16M19	30 – 46
	32 – 48
90170–24M22	17 – 12
90171–18M04	31 – 27
	33 – 27
90179–06M24	1 – 19
	2 – 12
	12 – 22
90179–08003	22 – 27
90183–02M03	30 – 57
	32 – 61
90185–05002	31 – 17
	33 – 17

PART NO.	REF. NO.
90185–09M01	34 – 6
90185–14M00	26 – 27
90185–22M11	25 – 24
90201–02M00	30 – 56
	32 – 60
90201–05552	9 – 7
90201–06068	15 – 18
	23 – 14
90201–06M31	24 – 60
90201–08023	30 – 70
	32 – 77
90201–08M00	7 – 16
90201–08M54	23 – 28
90201–09M01	13 – 22
90201–09M02	24 – 44
90201–10M20	34 – 7
90201–10M76	34 – 17
90201–12M05	25 – 50
90201–12M34	20 – 56
90201–13M01	25 – 49
90201–15M58	26 – 14
90201–16M00	30 – 45
	32 – 47
90201–16M01	26 – 23
90201–16M55	26 – 11
90201–22M01	30 – 28
	32 – 30
90201–25M02	17 – 13
90201–26M03	4 – 29
90201–26M59	25 – 23
90201–28M01	26 – 25
90201–31M00	30 – 64
90201–40M00	26 – 2
90202–05088	13 – 30
90202–06007	24 – 28
90202–08M20	24 – 25
90202–28M46	26 – 24
90202–32M19	26 – 10
90202–40M47	26 – 5
90206–10M04	24 – 62
90206–12M00	24 – 54
90206–14N50	28 – 2
90206–15M18	23 – 13
90206–22M19	30 – 29
	32 – 31
90280–03M01	7 – 19
90280–04M05	30 – 25
	32 – 27

PART NO.	REF. NO.
90280–04M05	39 – 26
90280–05015	17 – 11
90340–08002	30 – 7
	32 – 9
90340–14M00	3 – 13
90383–16M01	3 – 6
90384–06M07	3 – 5
90386–10M16	25 – 39
90386–12069	24 – 10
90386–15M73	23 – 12
90386–18M14	25 – 46
	27 – 17
90386–18M63	25 – 45
90386–25M31	25 – 22
90386–39M89	26 – 3
90386–90M90	24 – 42
90387–05M00	9 – 13
	11 – 29
90387–06011	2 – 13
90387–06M29	24 – 61
90387–06M60	15 – 21
90387–08M09	24 – 11
90387–08M16	24 – 55
90387–08M31	11 – 4
90387–08M37	23 – 27
90387–10M02	25 – 41
90387–10M61	34 – 3
90430–08020	30 – 9
	32 – 11
	39 – 4
90430–14115	3 – 14
	38 – 4
90445–05M07	14 – 7
90445–07015	12 – 13
90445–07016	3 – 22
	12 – 12
90445–07M03	3 – 21
	12 – 11
90445–07M04	13 – 15
90445–07M10	3 – 16
	13 – 14
90445–07M21	29 – 13
90445–07M29	3 – 23
90445–07M44	12 – 25
	13 – 12
90445–07M46	13 – 13
90445–07M96	13 – 10
90445–07MA6	3 – 24

PART NO.	REF. NO.
90445–07MF0	29 – 13
90445–09022	6 – 19
90445–09024	31 – 4
	33 – 4
90445–09068	6 – 15
90445–09111	31 – 4
	33 – 4
90445–09221	6 – 18
90445–09M25	20 – 6
90445–09M30	6 – 13
90445–11M26	14 – 31
90445–11M33	1 – 15
90445–11M36	23 – 61
90445–12M04	14 – 13
90445–13M01	16 – 2
90445–13M12	15 – 51
90445–13M17	15 – 3
90445–15002	7 – 7
90446–07M35	13 – 9
90446–07M48	13 – 11
90446–10M01	18 – 20
90446–10M87	21 – 9
90446–15M07	15 – 50
90446–17MA8	13 – 7
90447–07011	19 – 1
90447–10004	20 – 9
90447–15001	11 – 43
90447–19004	15 – 28
90447–22004	11 – 42
90450–10M07	16 – 6
90462–08018	1 – 17
90464–07008	6 – 14
90464–07M05	13 – 18
90464–07M20	13 – 20
90464–08004	20 – 50
90464–11008	19 – 17
90464–13M34	14 – 18
	15 – 2
90464–15005	31 – 7
	33 – 7
90464–15006	31 – 6
	33 – 6
90464–18003	18 – 22
90464–20213	19 – 25
90464–20258	23 – 64
90464–23199	20 – 34
90465–05M87	19 – 15
90465–06M86	17 – 17

PART NO.	REF. NO.
90465–06M88	6 – 8
90465–08M23	6 – 10
90465–08M83	25 – 18
90465–11M10	6 – 16
	8 – 57
	13 – 8
	14 – 14
	15 – 7
	18 – 24
	19 – 2
	23 – 49
	25 – 25
	29 – 15
	36 – 13
90465–11M52	19 – 13
90465–13M11	14 – 3
90465–13M18	6 – 41
90467–08004	6 – 33
90467–08M10	6 – 12
	29 – 21
	31 – 5
	33 – 5
90467–08M18	13 – 33
	20 – 7
90468–07M02	3 – 17
	13 – 17
90468–18008	24 – 26
90480–06M19	16 – 4
90480–10M23	11 – 28
	15 – 22
90480–20M05	6 – 36
90480–22M15	18 – 23
90480–22M81	23 – 26
90480–25161	18 – 19
90501–10M77	30 – 58
	32 – 62
90501–11M10	30 – 17
	32 – 19
90501–16M11	6 – 35
90506–16M34	23 – 18
90506–20011	25 – 43
90508–20M31	24 – 14
90560–12M01	34 – 4
91490–12012	13 – 29
91490–20012	24 – 43
91490–40030	31 – 28
	33 – 28
91609–10014	27 – 62

PART NO.	REF. NO.
91690–30010	24 – 3
91690–30020	25 – 42
92903–05600	3 – 38
	18 – 26
92903–06100	17 – 6
	24 – 39
92903–06600	3 – 34
	12 – 20
	17 – 7
	18 – 10
	24 – 40
92903–08100	19 – 8
92903–08600	7 – 3
	11 – 37
	22 – 31
92990–04100	36 – 4
92990–04600	23 – 40
92990–05100	37 – 10
92990–05200	2 – 19
92990–05600	12 – 5
	37 – 22
92990–06100	1 – 4
	2 – 4
	37 – 16
92990–06600	14 – 39
	37 – 17
92990–08200	24 – 53
92990–10600	21 – 5
92990–18200	31 – 26
	33 – 26
92995–04100	24 – 18
92995–05100	17 – 9
92995–05600	3 – 32
	17 – 10
92995–06100	4 – 19
	13 – 46
	20 – 24
	24 – 33
92995–06600	1 – 10
	2 – 10
	5 – 7
	6 – 29
	13 – 47
	17 – 16
	18 – 15
	19 – 5
	20 – 19
	21 – 3

PART NO.	REF. NO.
92995–06600	23 – 43
	24 – 34
	25 – 5
	29 – 7
92995–08200	24 – 13
92995–08600	5 – 12
	6 – 32
	23 – 52
	30 – 42
	32 – 44
92995–10100	25 – 30
	31 – 10
	33 – 10
92995–10600	25 – 31
	26 – 19
	31 – 11
	33 – 11
92995–14600	26 – 16
93101–28M16	30 – 35
	32 – 37
	39 – 13
93101–30002	30 – 67
	32 – 74
	39 – 16
93102–40M38	4 – 4
93103–40011	4 – 15
	38 – 10
93104–22M07	4 – 13
	38 – 9
93106–09014	30 – 13
	32 – 15
	39 – 9
93106–19N50	27 – 6
93210–06001	27 – 38
93210–06270	2 – 14
93210–064A5	27 – 27
93210–07003	27 – 37
93210–09165	24 – 36
	27 – 56
93210–10M74	27 – 50
93210–16275	34 – 9
93210–18397	27 – 34
93210–18MA9	13 – 24
	38 – 15
93210–19M82	13 – 4
93210–35321	26 – 4
93210–37160	30 – 21
	32 – 23

PART NO.	REF. NO.
93210–37160	39 – 11
93210–55M14	30 – 39
	32 – 41
	39 – 14
93210–64488	30 – 12
	32 – 14
	39 – 8
93210–85M32	4 – 17
	38 – 11
93210–86M38	30 – 20
	32 – 22
	39 – 10
93211–04384	30 – 68
	32 – 75
	39 – 15
93306–00001	10 – 3
93306–001U0	10 – 5
93306–209U1	4 – 6
93306–210U0	30 – 62
93306–308U0	4 – 9
93310–32657	4 – 28
93310–84106	4 – 30
93310–959U0	4 – 7
93311–83280	30 – 3
	32 – 3
93311–940V0	4 – 3
93315–43064	30 – 66
	32 – 73
93315–660W3	32 – 5
93317–330U2	30 – 36
	32 – 38
93317–62891	32 – 50
93332–00048	32 – 66
93332–000W1	30 – 4
93341–440U5	32 – 68
93341–670V0	32 – 6
93341–930U9	30 – 38
	32 – 40
93399–999T6	28 – 3
93410–18M02	25 – 47
93410–37M04	26 – 7
93410–40M03	4 – 10
93420–36M01	29 – 17
93420–61M07	4 – 16
93450–37097	32 – 51
93501–04011	30 – 59
	32 – 63
93501–08001	27 – 72

PART NO.	REF. NO.
93505–32038	27 – 28
93605–10108	7 – 14
93606–12019	29 – 12
	30 – 32
	32 – 34
	39 – 24
93608–12063	3 – 15
93608–12M05	29 – 8
	31 – 8
	33 – 8
93700–06M01	24 – 9
93700–06M03	24 – 30
	25 – 17
93700–09M00	30 – 71
	32 – 78
94702–00404	5 – 45
95313–08600	24 – 41
95333–08600	19 – 7
95380–03600	15 – 41
95380–04600	36 – 5
95380–05600	13 – 27
	24 – 57
	37 – 11
95380–06600	1 – 5
	2 – 5
	14 – 40
	24 – 66
	37 – 15
95380–12600	25 – 51
95380–14700	34 – 16
95380–14800	26 – 15
95670–06660	12 – 21
95707–08600	7 – 20
95780–10300	26 – 35
95895–06016	23 – 56
95895–06020	19 – 33
	23 – 33
95895–06030	17 – 22
97013–05012	3 – 37
97013–05020	18 – 25
97013–06012	24 – 38
97013–06014	18 – 9
97013–06020	3 – 33
97013–06035	17 – 5
97013–06060	12 – 19
97013–08012	7 – 9
97013–08045	22 – 30
	24 – 52

PART NO.	REF. NO.
97013–08055	7 – 2
	11 – 39
97013–08090	11 – 36
97075–06020	5 – 6
	6 – 28
97075–08030	6 – 31
97075–08035	5 – 11
	23 – 29
97075–08055	23 – 51
97080–06100	14 – 38
97095–05012	3 – 31
97095–06010	20 – 23
	25 – 7
	29 – 6
97095–06012	18 – 14
	19 – 4
	20 – 18
	21 – 2
97095–06014	19 – 26
	25 – 27
97095–06016	1 – 9
	2 – 9
	18 – 47
	23 – 15
97095–06020	4 – 18
	13 – 45
	23 – 42
	24 – 7
97095–06025	25 – 4
97095–06030	24 – 32
97095–06035	29 – 38
97095–08020	30 – 73
	32 – 80
97095–08025	7 – 17
	30 – 41
	32 – 43
97095–08035	24 – 12
97095–10045	25 – 29
	26 – 18
	31 – 9
	33 – 9
97513–08570	11 – 35
97513–10590	3 – 18
97575–08550	5 – 10
97595–06416	15 – 17
97595–06510	6 – 9
97595–06514	15 – 20
97607–04230	27 – 19

PART NO.	REF. NO.
97607–05210	27 – 24
97780–50612	1 – 18
97780–50616	1 – 13
	2 – 18
97780–50620	2 – 29
	20 – 41
97780–60620	20 – 33
97880–04016	23 – 39
97880–05016	12 – 4
97885–04016	24 – 17
97885–05012	21 – 7
97885–05030	17 – 8
97885–06008	24 – 48
97885–06010	17 – 15
	25 – 13
97885–06012	25 – 10
97885–06016	26 – 33
97985–05212	9 – 12
97985–05330	9 – 16
98580–06520	19 – 31
98980–05010	37 – 9
98980–06020	37 – 14
99001–08600	30 – 16
	32 – 18
99480–06012	3 – 44
99590–10114	5 – 19
	30 – 61
	32 – 65
9E450–04433	36 – 2
9E450–04533	36 – 3

PART NO.	REF. NO.

PART NO.	REF. NO.

PART NO.	REF. NO.

PART NO.	REF. NO.

PART NO.	REF. NO.

Z300TRC/LZ300TRC
Z300AETO/LZ300AETO
PARTS CATALOGUE
©2003 by Yamaha Motor Co., Ltd.
1st edition, June 2003
All rights reserved.
Any reprinting or unauthorized use
without the written permission of
Yamaha Motor Co., Ltd.
is expressly prohibited.
Printed in Japan.